For further information
Ph: 517-284-7740
www.michigan.gov/mioshastandards

DEPARTMENT OF LICENSING AND REGULATORY AFFAIRS

DIRECTOR'S OFFICE

GENERAL INDUSTRY SAFETY STANDARDS

Filed with the Secretary of State on July 19, 1968 (as amended January 2, 1973) (as amended April 2, 1979) (as amended May 17, 1983) (as amended May 31, 1990) (**as amended May 27, 2009**)

These rules take effect 14 days after filing with the Secretary of State

(By authority conferred on the director of the department of energy, labor and economic growth by sections 16 and 21 of 1974 PA 154, and Executive Reorganization Order Nos. 1996-2, 2003-1, and 2008-20, MCL 408.1016, 408.1021, 445.2001, 445.2011, and 445.2025)

R 408.10122, R 408.10123, R 408.10126, R 408. 10127, R 408.10128, R 408.10129, R 408.10142, R 408.10143, and R 408.10155 of the Michigan Administrative Code, are amended.

PART 1A. ABRASIVE WHEELS

Table of Contents:

GENERAL PROVISIONS 2
R 408.10101. Scope. 2
R 408.10102. Definitions; A to C. 2
R 408.10103. Definitions; D to L. 2
R 408.10104. Definitions; M to R. 2
R 408.10105. Definitions; S to W. 2
SHAPE TYPES OF GRINDING WHEELS 3
SHAPE TYPES OF GRINDING WHEELS CONES AND PLUGS 5
RELIEVED AND/OR RECESSED WHEELS 7
R 408.10111. Handling and storage of abrasive wheels. 9
R 408.10113. Inspection of abrasive wheels. 10
R 408.10114. Work rests. 10
R 408.10115. Machine spindles. 10
GUARDING PROVISIONS 11
R 408.10121. General requirements. 11
R 408.10122. Guard exposure angles. 11
R 408.10123. Guard for portable grinders. 11
R 408.10124. Guarding cup wheels. 11
R 408.10125. Exposure adjustments. 11
R 408.10126. Material requirements and minimum dimensions. 11
R 408.10127. Construction of fabricated guards. 11
R 408.10128. Construction of drawn steel guards. ... 11
R 408.10129. Construction of band type guards. 12
FLANGE PROVISIONS 12
R 408.10141. General requirements. 12
R 408.10142. Flange construction. 12
R 408.10143. Maintenance for flanges. 12
MOUNTING PROVISIONS 12
R 408.10151. Bushings. 12
R 408.10152. Blotters. 12
R 408.10153. Multiple wheel mounting. 13
R 408.10154. Mounting nuts. 13
R 408.10155. Mounting of abrasive disc wheels. 13
R 408.10156. Mounting depressed center wheels. 13
R 408.10157. Mounting depressed center cutting-off wheels. 13
R 408.10158. Mounting cylinder wheels. 13
R 408.10159. Mounting segments. 13
SPEED PROVISIONS 13
R 408.10173. Training, maintenance, and procedures to prevent wheel overspeed. 13
R 408.10174. Grinding machine spindle speeds. 13
R 408.10175. Wheel speeds. 14
SPECIAL SPEEDS 14
R 408.10177. Special speeds. 14
OPERATING PROVISIONS 14
R 408.10181. Operating provisions. 14
R 408.10182. Training. 14
R 408.10184. Starting new wheels. 14
R 408.10185. Truing and dressing wheels. 14
R 408.10186. Side, form, shoulder, and contour grinding. 14
R 408.10187. Maintenance. 14
R 408.10198 Figures. 15
FIGURES 1 TO 23 15
R 408.10199 Tables. 21
TABLES 1 TO 31 21

GENERAL PROVISIONS

R 408.10101. Scope.

Rule 101. This part sets forth rules and specifications for the safe use of abrasive wheels in, around and about places of employment. They include specifications for safety guards, flanges, chucks and rules for storage, handling, mounting and use of all grinding wheels, except natural sandstone wheels.

R 408.10102. Definitions; A to C.

Rule 102. (1) "Abrasive wheel-wheel" means a cutting tool that consists of abrasive grains held together by a bonding material.

(2) "Blotter" means a flat disc of compressible material that is used to cushion the area of a grinding wheel coming in contact with a flange.

(3) "Centerless O.D. grinding" means the precision grinding of the outer surface of any cylindrical workpiece which is rotated by a regulating wheel and supported by a work blade.

(4) "Concrete sawing" means the cutting or slotting of materials such as concrete or asphalt where the sawing machine rides upon the surface being sawed.

(5) "Contour grinding" means a grinding operation in which the grinding wheel or part follows a machine-generated contour.

(6) "Cutting off" means the slicing or parting of any material or part.

(7) "Cylindrical O.D. grinding" means the precision grinding of the outer surface of any cylindrical workpiece which is supported at one or both ends.

R 408.10103. Definitions; D to L.

Rule 103. (1) "Disc or plate-mounted grinding" means the removal of material using an abrasive wheel fastened to a metal plate.

(2) "Flange" means a collar, disc, or plate between which abrasive wheels are mounted.

(3) "Form grinding" means to impart a specific shape or form onto a grinding wheel for the purpose of grinding that specific shape to the material or workpiece.

(4) "Guard" means an enclosure that is designed to restrain pieces of abrasive wheel and protect the employee if the wheel breaks.

(5) "Internal grinding" means the precision grinding of the inside surface of the hole in a workpiece.

(6) "Lapidary" means to cut off, shape, or grind precious or semiprecious gem-like materials.

R 408.10104. Definitions; M to R.

Rule 104. (1) "Masonry cutting" means the cutting off, notching or slotting of units of materials such as brick, tile, block or refractory shapes where the workpiece is brought to the machine.

(2) "Mounted wheels" means various shaped abrasive wheels not more than 2 inches in diameter and mounted on a plain steel mandrel.

(3) "Off-hand grinding" means the grinding of any material which is held in an employee's hand.

(4) "Portable grinding" means a grinding operation where the machine is designed to be hand held and may be easily moved from 1 location to another.

(5) "Precision grinding" means the grinding operation performed by machines used to finish work parts to specified dimensions and finish requirements.

(6) "Revolutions per minute-rpm" means the number of complete turns that a grinding wheel makes in 1 minute.

R 408.10105. Definitions; S to W.

Rule 105. (1) "Shoulder grinding" means a periphery grinding operation where a limited amount of grinding with the side of the wheel may be performed.

(2) "Snagging" means the grinding which removes relatively large amounts of material without regard to close tolerances or surface finish requirements.

(3) "Surface feet per minute" or "sfpm" means the distance in feet that any 1 abrasive grain travels in 1 minute on a peripheral surface of a rotating grinding wheel.

(4) "Surface grinding" means the precision grinding of a plane or formed surface.

(5) "Tool or cutter grinding" means the precision grinding or sharpening of various types of cutting tools.

(6) "Tuck pointing" means the removal, by grinding, of mortar, cement, or other nonmetallic material.

(7) "Wheels types" means the classification of abrasive wheels as listed in the following order

SHAPE TYPES OF GRINDING WHEELS

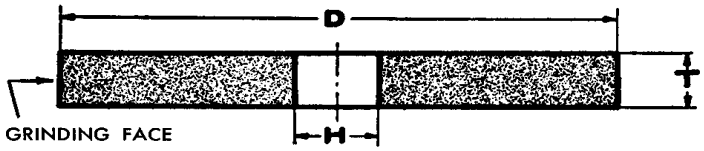

Type 1 – Straight wheel
Peripheral grinding wheel having a diameter thickness and hole.

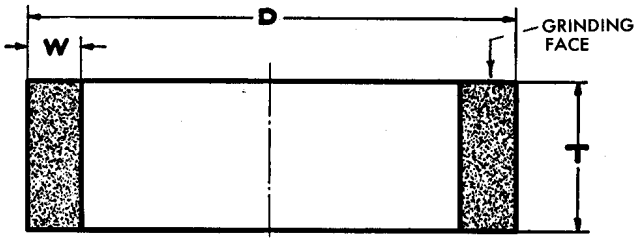

Type 2 – Cylinder wheel.
Side grinding wheel having a diameter, thickness and wall — wheel is mounted on the diameter, or a similar wheel mounted in a chuck or on a plate.

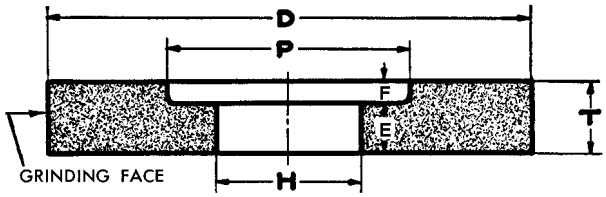

Type 5 – Wheel, recessed one side.
Peripheral grinding wheel having one side straight or flat and the opposite side recessed. A recessed wheel allows a wider faced grinding wheel to be used when the available mounting thickness (E) is less than the required overall thickness (T).
The recess allows grinding clearance for the nut and flange.

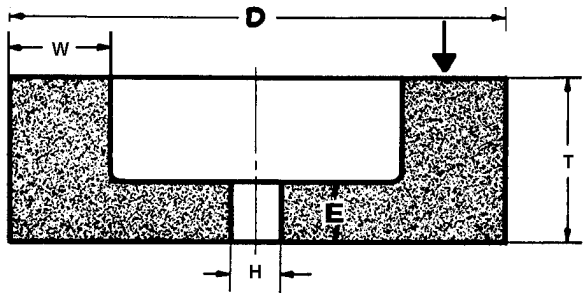

Type 6 – Straight-cup wheel.
Side grinding wheel having a diameter, thickness and hole with one side straight or flat and the opposite side recessed. This type, however, differs from Type 5 in that the grinding is performed by the wall (W). The wall dimension (W) takes precedence over the diameter of the recess as an essential intermediate dimension to describe this shape type.
NOTE: Arrows indicate grinding surface.

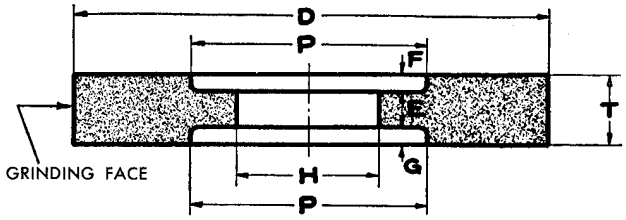

Type 7 – Wheel, recessed two sides.
Peripheral grinding wheel having both sides recessed to allow grinding clearance for both flanges or recessed so that an unusually wide faced wheel may be mounted when the available mounting thickness (E) is less than the overall thickness (T).

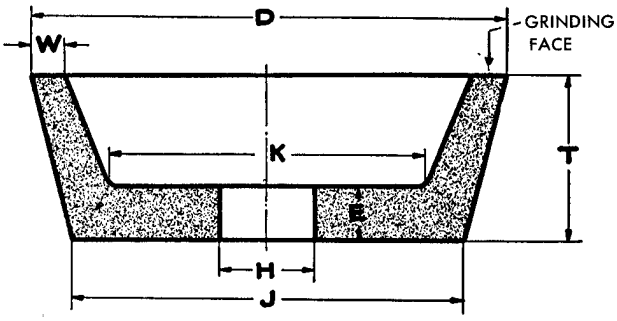

Type 11 – Flaring-cup wheel.
Side grinding wheel having a wall flared or tapered outward from the back. Wall thickness at the back is normally greater than at the grinding face (W).

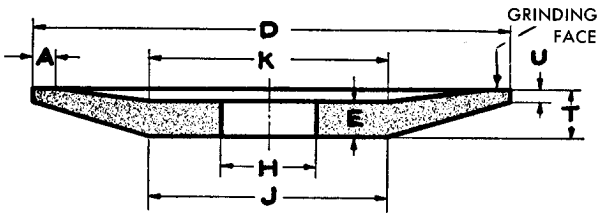

Type 12 – Dish wheel.
Side grinding wheel known as a dish, differing from a Type 11 in that Type 12 always has a (U) dimension. The (W) dimension of a Type 11 becomes the (A) dimension of a Type 12. The grinding may be performed by the (U) face.

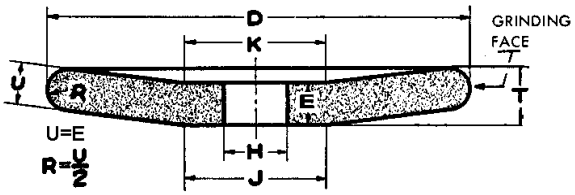

Type 13 – Saucer wheel.
Peripheral grinding wheel known as a saucer, differing from a Type 12 in that the cross-section is equal throughout (U=E). The face is always half-round with R=U/2.

SHAPE TYPES OF GRINDING WHEELS CONES AND PLUGS

On all cones and plugs grinding is performed by all surfaces except the flat (dimension “D”) on the mounting side. These shapes normally have a blind hole threaded bushing for mounting.

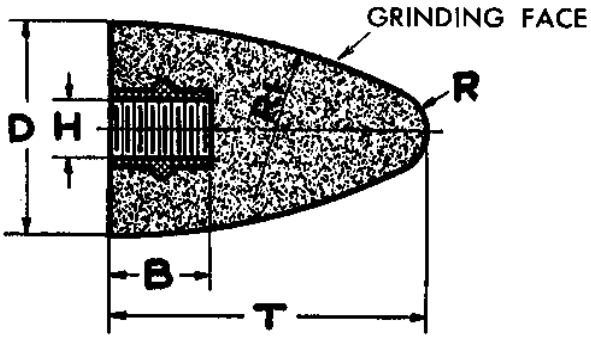

Type 16 – Cone, curved side.
Curved sided cone with a radius nose sometimes referred to as “Bullet shape.”

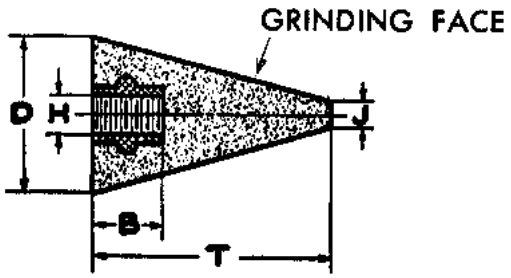

Type 17 – Cone, straight side, square tip.
Cone with a straight side, square tip.

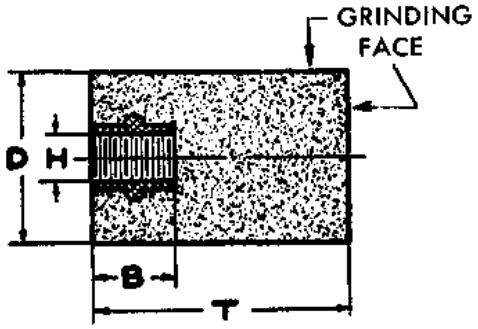

Type 18 – Plug, square end.
Plug – Cylindrical in shape with a square end.

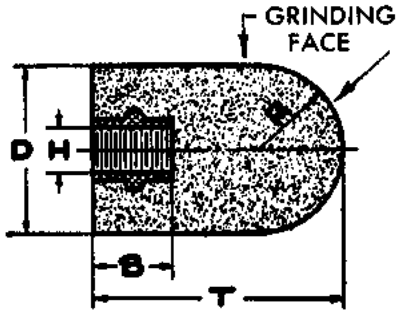

Type 18R – Plug, round end.
Plug – Cylindrical in shape with a radius nose. R=D/2

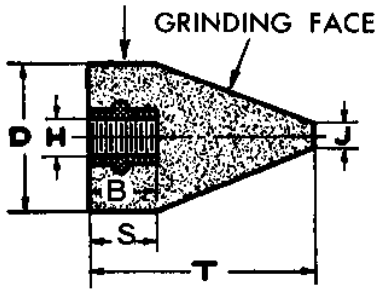

Type 19 – Plugs, conical end, square tip.
Combination cone and plug with a square tip similar to Type 17
and the Cylindrical portion similar to Type 18.
The cylindrical portion (S) is normally equal to or greater than
the depth of the blind hole threaded bushing (B).
NOTE: Arrows indicate grinding surface.

RELIEVED AND/OR RECESSED WHEELS

A relieved side is a depression in the side of the wheel which is tapered from a radial flat at the periphery (A) to an inside flat (K) or recess diameter (P).

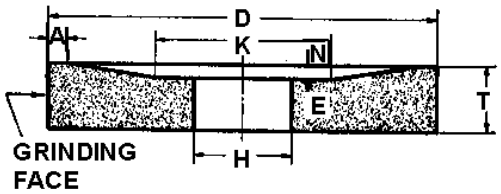

Type 20 – Wheel, relieved one side.
Peripheral grinding wheel having one side straight or flat
and the other side relieved to a flat.

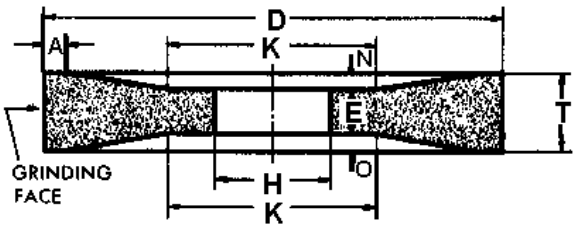

Type 21 – Wheel, relieved two sides.
Peripheral grinding wheel having both sides relieved to a flat.

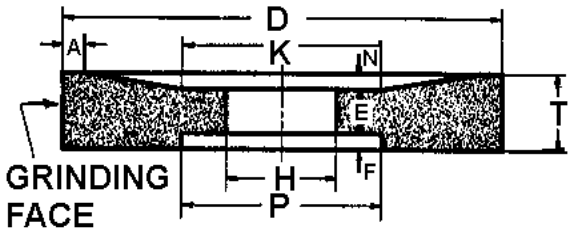

Type 22 – Wheel, relieved one side, recessed other side.
Peripheral grinding wheel having one side recessed and the other side relieved to a flat.

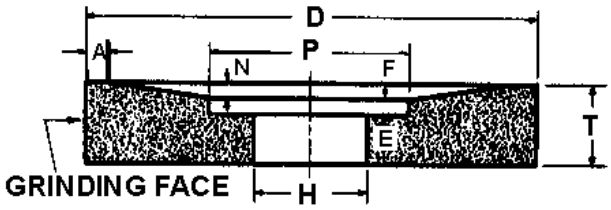

Type 23 – Wheel, relieved and recessed same side.
Peripheral grinding wheel having one side straight or flat
and the other side relieved to a recess.

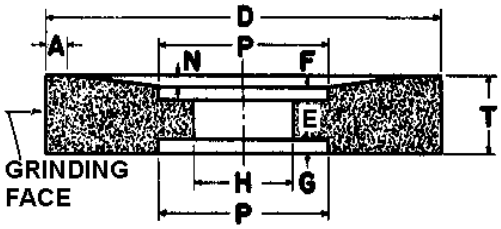

Type 24 – Wheel, relieved and recessed one side, recessed other side.
Peripheral grinding wheel having one side recessed
and the other side relieved to a recess.

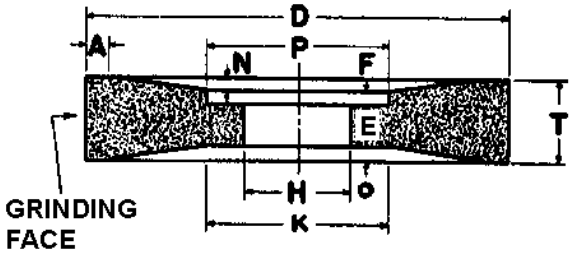

Type 25 – Wheel, relieved and recessed one side, relieved other side.
Peripheral grinding wheel having one side relieved to a flat
and the other side relieved to a recess.

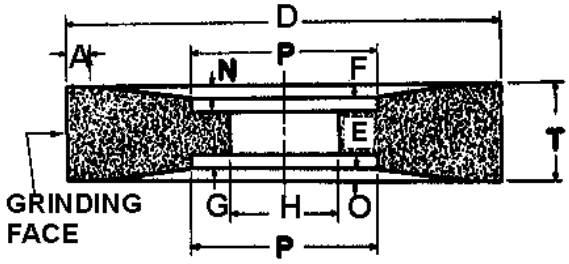

Type 26 – Wheel, relieved and recessed both sides.
Peripheral grinding wheel having both sides relieved to a recess.

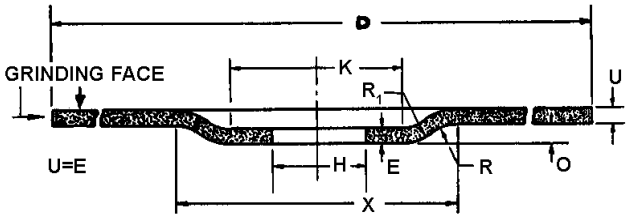

Type 27 – Wheel, depressed center.

Portable Grinding: Grinding normally done by contact with work at approximately a 15° angle with face of wheel.

Cutting-Off: When used as a cutting-off wheel, the periphery is the grinding face.

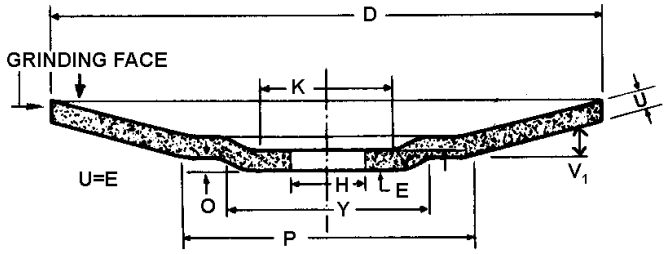

Type 28 – Wheel, depressed center (saucer shaped grinding face).

Portable Grinding: Grinding normally done by contact with work at approximately a 15° angle with face of wheel.

NOTE: Arrows indicate grinding surface.

R 408.10111. Handling and storage of abrasive wheels.

Rule 111. (1) An abrasive wheel shall not be dropped, bumped or rolled.

(2) An abrasive wheel shall be stored in a rack, bin, box or drawer in a manner to prevent damage to the wheel.

(3) An abrasive wheel shall be disbursed on a first-in first-out basis.

(4) An abrasive wheel shall not be stored subject to:

(a) Exposure to high humidity, water or other liquids.

(b) Freezing temperatures, or any temperature low enough to cause condensation on the wheel when moving it from storage to an area of higher temperature.

R 408.10113. Inspection of abrasive wheels.

Rule 113. (1) At time of unpacking, an abrasive wheel shall be inspected for damage.

(2) Prior to mounting, a vitrified or silicate wheel more than 4 inches in diameter shall be given a ring test by being tapped by a non-metallic tool such as a handle of a screw driver for a light wheel or a wooden mallet for a heavy wheel. The ring test shall be conducted as follows:

(a) Wheels must be dry and free from sawdust when applying the ring test, otherwise the sound will be deadened.

(b) Tap wheels about 45 degrees each side of the vertical center line and about 1 or 2 inches from the periphery as indicated by the spots in the figures below.

(c) Then rotate the wheel 45 degrees and repeat the test.

(d) A sound and undamaged wheel will give a clear metallic tone. If cracked, there will be a dead sound and not a clear “ring.”

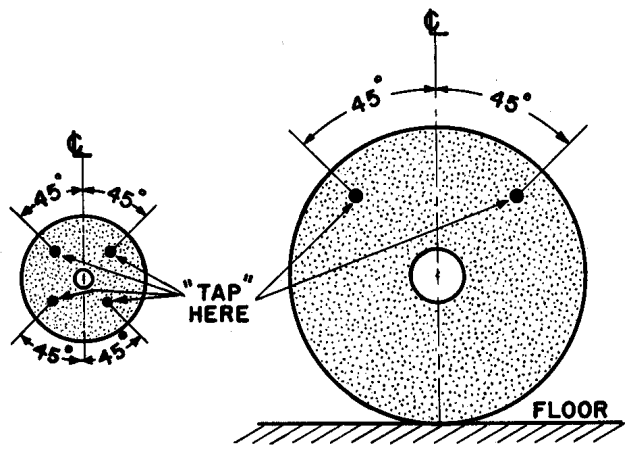

Light Wheels	Heavy Wheels
Suspend from hole by small pin or finger	Support on clean hard floor

R 408.10114. Work rests.

Rule 114. (1) An off hand grinder shall be equipped with either a work rest so located that the point of grinding is on a horizontal plane with the wheel spindle, or a device which shall prevent the work piece from jamming between the abrasive wheel and the wheel guard. Where a work rest or device is used at a height other than the horizontal plane with the spindle, a warning sign shall be installed to prohibit use of the grinder for other than the job for which the work rest or device was set.

(2) A work rest shall be adjusted and maintained to within 1/8 inch of the abrasive wheel. The adjustment shall be accomplished when the abrasive wheel is at rest.

(3) A work rest shall be designed and constructed of metal capable of supporting the work piece.

R 408.10115. Machine spindles.

Rule 115. (1) A wheel or flange that is secured by a spindle nut shall have the direction of the thread opposite that of the spindle rotation so that the nut will tighten as the spindle revolves.

(2) A spindle shall be long enough to engage all the threads within the nut.

(3) Spindle threads shall extend inside the flange, but not more than halfway within the hole of the abrasive wheel.

(4) The spindle shall not be larger than the nominal size, with the undersize tolerance limited as required to prevent a hazardous condition.

(5) A spindle on which a threaded-hole wheel is mounted shall be threaded to allow the abrasive wheel to be screwed flat against the back flange. In addition, all of the following requirements shall be complied with:

(a) The direction of the thread shall be such that removing the abrasive wheel requires rotation of the wheel in the same direction that it turns when in use.

(b) A spindle shaft shall not touch the bottom of a blind hole in an abrasive wheel.

(c) A back flange that is specified in this rule shall be flat, unrelieved, and square to the spindle axis.

GUARDING PROVISIONS

R 408.10121. General requirements.

Rule 121. (1) An abrasive wheel shall be provided with a guard, except as noted in this subrule, which shall cover the spindle end, nut, and flange projections, as well as the periphery, other than where work is to be performed. (See figures) Exceptions are as follows:

(a) Wheels used for internal grinding while advancing or retracting the work or while within the work.

(b) Mounted wheels that are not more than 2 inches in diameter.

(c) Plug and cones that are not more than 3 inches in diameter or 5 inches in length.

(d) A type 1 reinforced wheel which is not more than 3 inches in diameter and 1/4 inch thick and with which safety glasses and face shield protection are provided and used as prescribed in Part 33. Personal Protective Equipment, being R 408.13301 et seq. of the Michigan Administrative Code.

(e) Lapidary grinding. A metal diamond lapidary blade which is notched, segmented, or continuous rim which is used within a coolant deflector does not require guards for speeds of not more than 3,500 sfpm.

(f) Tuck point wheel, masonry, or concrete saws may have the spindle end, nut, and flange exposed as per figures 1 and 2 of R 408.10198.

(2) The guard shall be constructed of material that is capable of retaining pieces of a broken wheel. See material tables. The guard shall be mounted so as to maintain alignment with the abrasive wheel to contain wheel breakage, and the strength of the fastenings shall exceed the strength of the guard. The guard shall be in position before starting the wheel.

(3) Where flying particles or fragments are a hazard to employees other than the grinder operator, an enclosure or barrier shall be provided to isolate the operation from the remaining working area.

(4) When openings in the wheel safety guard assemblies are required for dressing, a mean shall be provided to protect the operator and other personnel from the hazards of flying particles, sparks, or wheel fragments.

R 408.10122. Guard exposure angles.

Rule 122. The maximum angle of exposure in a guard opening shall be as prescribed in table 1 of R 408.10199.

R 408.10123. Guard for portable grinders.

Rule 123. A guard on a right angle head or vertical portable grinder shall have the guard located so as to be between the operator and the abrasive wheel during use (See figure 3 of R 408.10198 and table 2 of R 408.10199). A portable grinder using a depressed center wheel shall have a guard as prescribed in figure 4 of R 408.10198 and table 3 of R 408.10199.

R 408.10124. Guarding cup wheels.

Rule 124. (1) A cup wheel on a portable grinder shall be protected by a band-type guard.

(2) A band-type guard shall be constructed as prescribed in figures 6 and 7 of R 408.10198 and tables 4 and 5 of R 408.10199 and adjusted within 1/2 inch of the working surface of the abrasive wheel.

(3) A revolving cup guard shall not be used as a method of safe guarding.

(4) A guard for a tool and cutter grinder cup wheel shall be not less than 180 degrees of the periphery and the back side of the wheel shall be guarded. The spindle end and nut and front of the wheel need not be guarded if the spindle end and nut are inside the plane of the working face of the wheel. See figure 5 of R 408.10198.

R 408.10125. Exposure adjustments.

Rule 125. A guard for an abrasive wheel on a bench, floor or cylindrical grinder shall be constructed so that the peripheral protecting member can be adjusted to the decreasing diameter of the abrasive wheel. The distance between the abrasive wheel and the end of the peripheral member at the top shall not exceed 1/4 inch. An adjustable tongue may be used to achieve this dimension.

R 408.10126. Material requirements and minimum dimensions.

Rule 126. (1) Figures 8 and 9 of R 408.10198 and table 6 of R 408.10199 shall be followed for material requirements, and minimum dimensions of peripheral and side members for guards. A cutting-off wheel 16 inches or less in diameter and operating at not more than 16,000 surface feet per minute may use cast or malleable iron as prescribed in table 6 of R 408.10199.

(2) A cutting-off wheel larger than 16 inches and operating at not more than 14,200 surface feet per minute shall have guards as prescribed in table 6 or 7 of R 408.10199.

R 408.10127. Construction of fabricated guards.

Rule 127. (1) A fabricated guard made of structural steel shall be as prescribed in table 8 of R 408.10199.

(2) Column A of table 8 shall also apply to cast guards.

(3) Column B of table 8 shall apply where an adjustable tongue is held by bolts.

(4) Any means of fastening shall be considered satisfactory if, when assembled, it has strength at least equal to the members being joined.

R 408.10128. Construction of drawn steel guards.

Rule 128. (1) A drawn steel guard for an abrasive wheel 8 inches and smaller on a portable grinder shall be as prescribed in figure 3 of R 408.10198 and table 2 of R 408.10199.

(2) A drawn steel guard for a depressed center wheel shall be as prescribed in figure 4 of R 408.10198 and table 3 of R 408.10199. The lip, shown as dimension B in figure 4 of R 408.10198, shall curl inward to deflect pieces if an abrasive wheel breaks.

R 408.10129. Construction of band type guards.
Rule 129. A band type guard for a segment, ring or nut inserted disc wheel shall be constructed as follows:

(a) The band shall be a steel plate or material of equal strength and as prescribed in figure 10 of R 408.10198 and table 9 of R 408.10199. The band shall be continuous with the ends being welded, riveted or bolted in such a manner as to leave the inside free of projections.

(b) The inside diameter of the band shall not be more than 1 inch larger than the outside diameter of the abrasive wheel and shall be concentric with the abrasive wheel.

(c) The width and adjustment of the band shall be such that the wheel will not protrude beyond the edge of the band a distance greater than that prescribed in table 10 of R 408.10199.

FLANGE PROVISIONS

R 408.10141. General requirements.
Rule 141. (1) An abrasive wheel shall be mounted between flanges, except as noted below, which shall not be less than 1/3 the diameter of the abrasive wheel. Exceptions:

(a) Mounted wheel.

(b) Portable cup, plug and cone wheels with threaded inserts or studs.

(c) Abrasive disc of the inserted nut, inserted washer and projecting stud type.

(d) Plate mounted wheel.

(e) Cylinder, cup or segmented wheel mounted in a chuck.

(f) Depressed center wheel.

(g) Internal wheel less than 2 inches in diameter.

(h) Straight and flaring cup wheel for terrazzo use.

(i) Cutting off wheel (See subrule 2).

(j) Masonry and concrete saws.

(2) A straight cutting-off wheel shall be mounted between relieved flanges which are not less than 1/4 the wheel diameter. A depressed center cutting-off wheel more than 16 inches in diameter shall be mounted between flat unrelieved flanges and not less than 1/4 the wheel diameter.

(3) A masonry saw using a reinforced resinold and steel centered wheel may use 4 inch diameter flanges for wheels thru 20 inch diameter.

(4) Concrete saws using a steel centered wheel 20 inch and larger may use flanges 1/6 the wheel diameter.

R 408.10142. Flange construction.
Rule 142. (1) Whenever a wheel is mounted between flanges, the flange shall be designed to transmit the driving torque from the spindle to the abrasive wheel. They shall be dimensionally accurate and balanced with no rough surfaces or sharp edges.

(2) A flange shall be made of steel, cast iron or materials of equal strength and rigidity so that when tightened, the radial width of the bearing surface of contact on the abrasive wheel is maintained (See figure 11 of R 408.10198).

(3) Two flanges between which an abrasive wheel is mounted, except when a special adaptor is used on a depressed center wheel, shall have the same dimensions and bearing surface.

(4) The minimum dimensions for the following types of flanges shall be maintained according to the listed figures and tables:

(a) Straight relieved flange – figure 11 of R 408.10198 and table 11 of R 408.10199.

(b) Straight unrelieved flange – figure 12 of R 408.10198 and table 12 of R 408.10199.

(c) Straight adaptor flange – figure 13 of R 408.10198 and table 13 of R 408.10199.

(d) Straight flange – figures 14 and 15 of R 408.10198 and table 14 of R 408.10199.

(e) Straight adaptor flange – figure 16 of R 408.10198 and table 15 of R 408.10199.

(f) Straight adaptor flange – heavy duty – figures 17 and 18 of R 408.10198 and table 16 of R 408.10199.

(g) Arborless wheel flange – figures 19 and 20 of R 408.10198 and table 17 of R 408.10199.

(h) Straight flange for wheel sleeves – figure 21 of R 408.10198 and table 18 of R 408.10199.

R 408.10143. Maintenance for flanges.
Rule 143. (1) A flange with a worn, warped, sprung or damaged bearing surface shall be repaired or replaced.

(2) When resurfacing a straight relieved flange, a recess of not less than 1/16 inch shall be maintained on the side next to the wheel for a distance prescribed in table 11 of R 408.10199.

(3) When resurfacing a straight flange of the adaptor or sleeve type, the undercut shown in figures 14 and 15 of R 408.10198 shall be maintained to insure that there will be no bearing on the sides of the abrasive wheel within 1/8 inch of the arbor hole.

MOUNTING PROVISIONS

R 408.10151. Bushings.
Rule 151. A bushing used in mounting an abrasive wheel shall not be greater than the width of the wheel or make contact with the flange.

R 408.10152. Blotters.
Rule 152. A blotter shall be used between a flange and the abrasive wheel. The blotter shall cover the entire contact area of the flange. Exceptions:

(a) Mounted, cone and plug wheels.

(b) Abrasive discs – inserted nut, inserted washer and projecting stud type.

(c) Plate mounted wheels.

(d) Cylinders, cups or segmented wheels that are chuck mounted.

(e) Type 27 and 28 depressed center wheels.

(f) Cutting off wheels.

(g) Internal wheels not more than 2 inches in diameter.

(h) Type 4 tapered wheels.

(i) Diamond and Borzon type wheels.

(j) Terrazzo wheels.

(k) Type 27A cutting-off wheels.

R 408.10153. Multiple wheel mounting.

Rule 153. When mounting more than 1 abrasive wheel between a pair of flanges, the wheels shall be cemented together, separated by spacers having low compressibility such as soft copper or brass or especially manufactured for mounting without cementing or use of the prescribed spacers. The spacers shall be equal in diameter to the flanges and have equal bearing surfaces.

R 408.10154. Mounting nuts.

Rule 154. (1) A single spindle nut shall be tightened only enough to drive the abrasive wheel and prevent slippage.

(2) A multiple screw flange shall be tightened uniformly to distribute pressure over the flange surface and prevent springing of the flange.

R 408.10155. Mounting of abrasive disc wheels.

Rule 155. (1) An inserted nut wheel shall be mounted with a steel machine face plate of the same diameter as the wheel. The thickness of the machine face plate shall be as prescribed in table 19 of R 408.10199.

(2) A screw hole in the machine face plate shall be located to match the threaded hole in the inserted nut and large enough so the screw will not bind. Each screw hole in the plate shall be countersunk to a uniform depth to accommodate the screw head. A screw shall engage the threads of the inserted nuts, but not touch the bottom of the hole.

(3) A machine face plate shall be flat, concentric and mounted at a 90 degree angle to the machine spindle.

(4) A plate mounted wheel having a mounting plate thinner than prescribed in table 19 shall have an additional machine face plate installed to provide the additional strength needed. The added machine face plate shall have the same diameter as the wheel (See figure 22 of R 408.10198 and table 20 of R 408.10199).

R 408.10156. Mounting depressed center wheels.

Rule 156. (1) A depressed center wheel, except as prescribed in rule 157, shall be mounted with specially designed adaptors.

(2) The back flange shall extend beyond the central hub or raised portion and contact the wheel to counteract the side pressure on the wheel in use.

(3) The adaptor nut which is less than the minimum 1/3 diameter of the wheel shall fit into the depressed side to prevent interference in side grinding and drive the wheel by its clamping force against the depressed portion of the back flange.

(4) Adaptors affixed by the depressed center wheel manufacturer shall not be reused.

R 408.10157. Mounting depressed center cutting-off wheels.

Rule 157. A depressed center cutting-off wheel more than 16 inches in diameter shall be mounted with flat unrelieved flanges having matching bearing surfaces not less than 1/4 the wheel diameter.

R 408.10158. Mounting cylinder wheels.

Rule 158. (1) A cylinder wheel shall be cemented or chucked onto a machine face plate which shall be flat, concentric and mounted at 90 degrees to the machine spindle.

(2) A cylinder wheel shall be used only on a machine equipped a band-type guard as prescribed in rule 129.

R 408.10159. Mounting segments.

Rule 159. (1) Segments shall be chucked in a holding mechanism as prescribed by the manufacturer of the chucking device.

(2) The segments shall be used only on a machine equipped with a band-type guard as prescribed in rule 129.

SPEED PROVISIONS

R 408.10173. Training, maintenance, and procedures to prevent wheel overspeed.

Rule 173. An employer shall establish appropriate training maintenance, and procedures to assure that wheel overspeed will not occur on an abrasive wheel.

R 408.10174. Grinding machine spindle speeds.

Rule 174. (1) The spindle speed shall be permanently marked on a grinding machine and maintained in a legible manner.

(2) The spindle speed shall not exceed the rated speed of the grinding wheel.

(3) The wheel spindle speed on a single-speed grinding machine shall be checked with a tachometer when a change is made which could affect the spindle speed.

(4) The wheel spindle speed on an air-driven grinder shall be checked with a tachometer as follows:

(a) After maintenance or repair.

(b) When in use, with such checks being performed as often as necessary to assure that wheel overspeed will not occur.

(5) The wheel spindle speed of a vari-speed grinding machine shall be checked with a tachometer as follows:

(a) When in use, with such checks being performed as often as necessary to assure that wheel overspeed shall not occur.

(b) After any change that could affect the spindle speed.

(c) When a new wheel is mounted.

R 408.10175. Wheel speeds.

Rule 175. (1) An abrasive wheel or its package shall show the maximum operating speed as revolutions per minute. The use of a package for this marking shall be limited to those shapes which make marking unfeasible.

(2) Except as provided for in R 408.10177, an abrasive wheel shall be run at a speed which is not more than that prescribed in table 21 of R 408.10199, but not more than the rated speed on the wheel. The revolutions per minute may be increased as the wheel diameter decreases if the original surface feet per minute speed is not exceeded. Wheel speed shall be computed from the free-running speed of the machine spindle.

(3) An employer shall purchase and use only an abrasive wheel which has been speed tested, as prescribed in table 22 of R 408.10199, by the manufacturer, with the following exceptions:

(a) A wheel that is less than 6 inches in diameter.

(b) A diamond or cubic boron nitrate wheel that is bonded by metal or organic substances.

(c) A segmental disc wheel and disc wheel.

(d) A ball grinding wheel.

(e) A regulating wheel for centerless grinders.

(f) A mounted wheel.

(g) A segment.

(4) The operating speed and overhand of a mounted wheel shall be not more than that prescribed in tables 23 to 31 of R 408.10199 (See figure 23).

SPECIAL SPEEDS

R 408.10177. Special speeds.

Rule 177. (1) Wheels that are used on special applications at speeds higher than those listed in table 21 of R 408.10199 shall be marked for high-speed application and the specific conditions of use. The marked maximum speed of the wheel shall not be exceeded.

(2) The machine and its components, such as the spindle, bearings, guards, flanges, and rated horsepower shall be such that the entire unit will operate safely at the special speed.

(3) An employer shall assure that a machine is operated with safety guards as prescribed in this part and that a machine and guards are maintained in good condition for continued safety.

OPERATING PROVISIONS

R 408.10181. Operating provisions.

Rule 181. (1) A grinding machine with a vari-speed control shall have the speed adjustment supervised by an authorized and trained employee.

(2) Before mounting a wheel on a vari-speed grinder, an employee shall adjust the speed of a machine to not more than the rated speed of the wheel.

R 408.10182. Training.

Rule 182. An employee shall be instructed in the care, use and protection of an abrasive wheel and equipment before assignment.

R 408.10183. Wheel breakage.

Rule 183. (1) A cracked or broken wheel shall not be used.

(2) Wheel breakage shall be investigated by the employer to determine and correct the cause.

R 408.10184. Starting new wheels.

Rule 184. After mounting an abrasive wheel, it shall be run with the guard in place or in an enclosure at operating speed for not less than 1 minute before applying work. During this time an employee shall not stand in front of or in line with the wheel.

R 408.10185. Truing and dressing wheels.

Rule 185. An out-of-truth abrasive wheel shall be trued by a trained employee. A wheel which cannot be trued shall not be used.

R 408.10186. Side, form, shoulder, and contour grinding.

Rule 186. Side grinding shall only be performed on an abrasive wheel that is designed for that purpose. A wheel designed for grinding on the periphery shall not be used for side grinding. This does not preclude wheel use for applications such as shoulder, form, and contour grinding. Where it is recognized that a limited amount of grinding with the side of the wheel is performed with a wheel that is designed for periphery grinding.

R 408.10187. Maintenance.

Rule 187. (1) An employer shall maintain grinding equipment in a condition which will not create a hazard for the employee.

(2) An employer shall instruct the employee to report defective equipment to the employee's supervisor.

R 408.10198 Figures.
Rule 198. Figures 1 to 23 read as follows:

FIGURES 1 TO 23

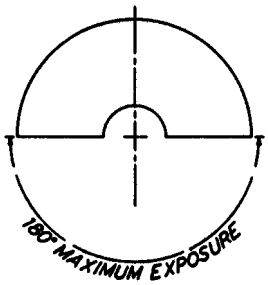

FIGURE 1

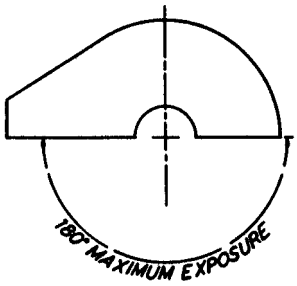

FIGURE 2

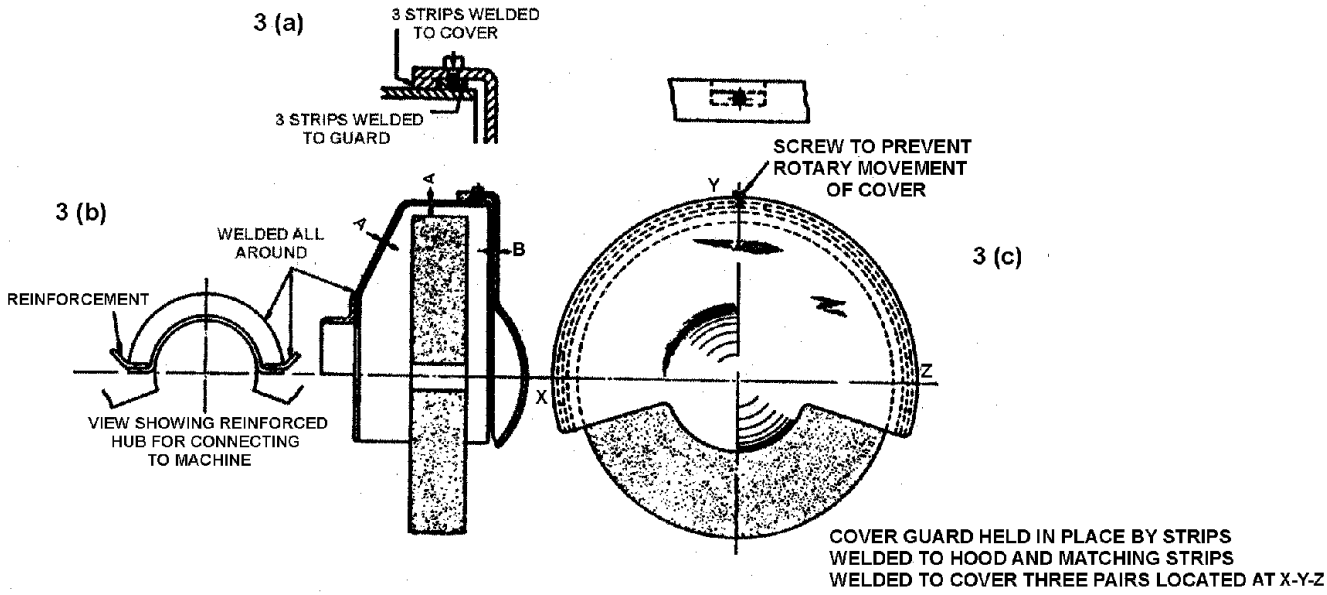

FIGURE 3
TYPICAL DRAWN STEEL GUARD FOR WHEELS
8 inches Diameter and Smaller a, b & c

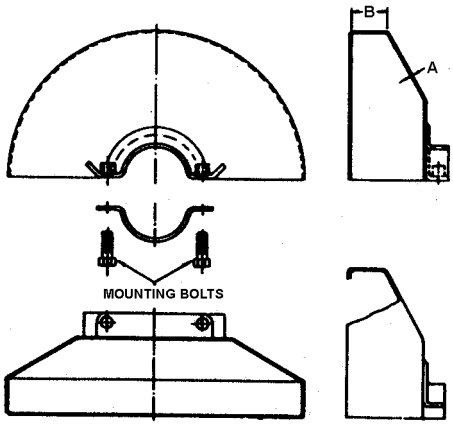

FIGURE 4
DRAWN STEEL GUARD FOR PORTABLE GRINDERS
USED WITH DEPRESSED CENTER WHEELS

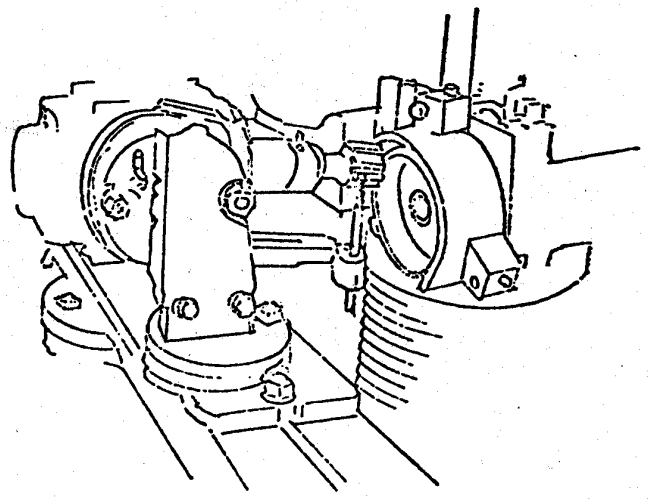

FIGURE 5

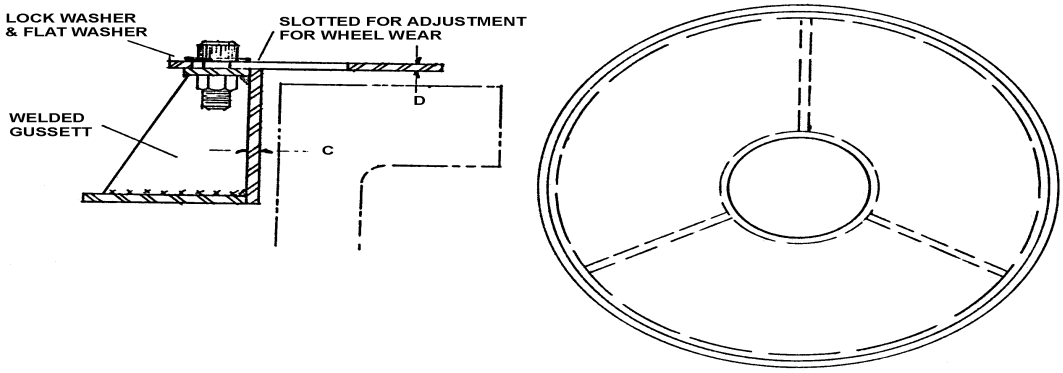

FIGURE 6
TYPICAL FABRICATED STEEL BAND-TYPE GUARD
FOR SQUARED OR TAPERED CUP WHEELS

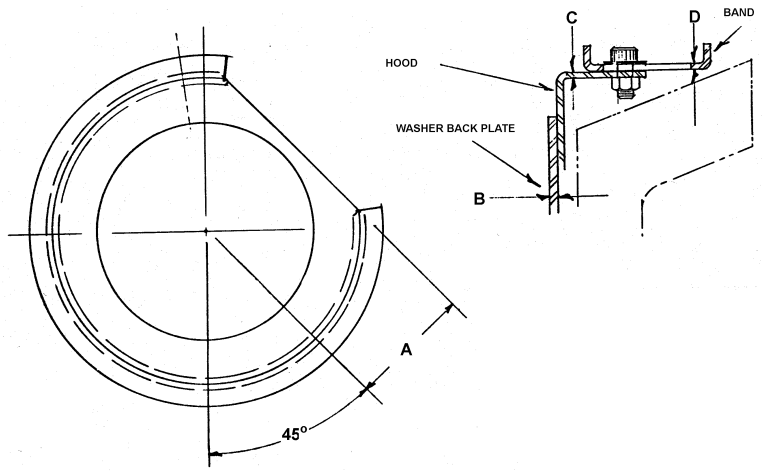

FIGURE 7
TYPICAL DRAWN STEEL BAND-TYPE GUARD FOR TAPERED CUP WHEELS

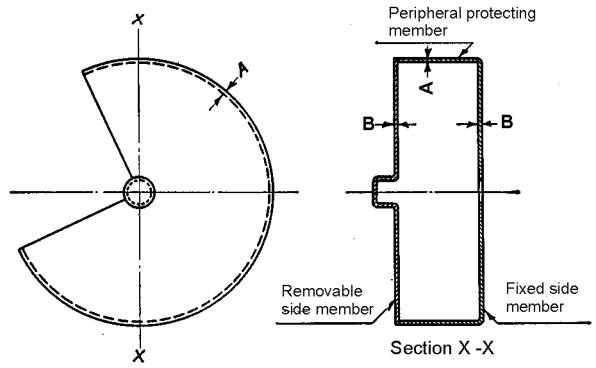

FIGURE 8

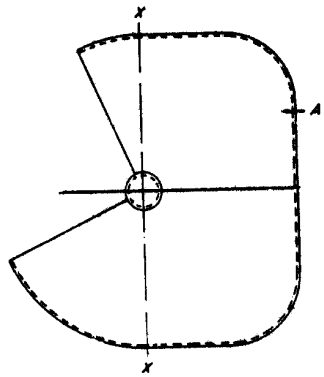

FIGURE 9

MINIMUM BASIC THICKNESS OF PERPHERAL AND SIDE MEMBERS FOR SAFETY GUARDS

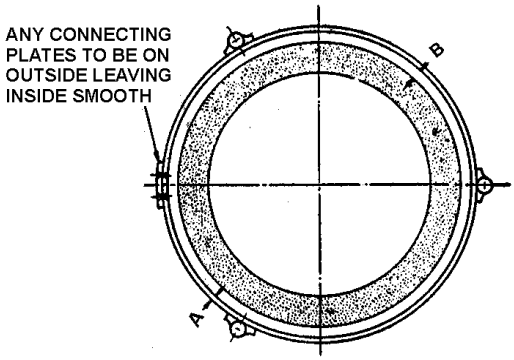

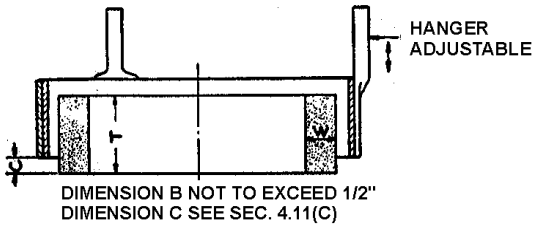

FIGURE 10
BAND-TYPE GUARD FOR RING, SEGMENT, NUT INSERTED WHEELS

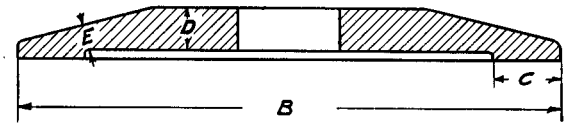

FIGURE 11

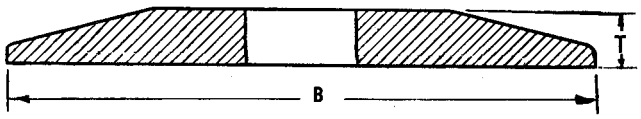

FIGURE 12

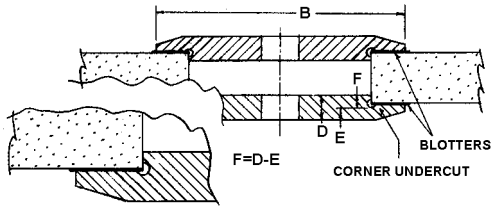

FIGURE 13

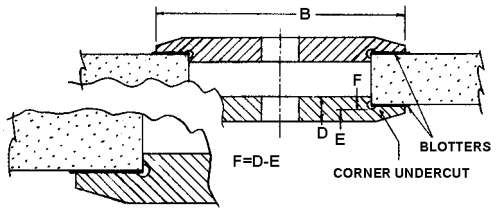

FIGURE 14
CENTRAL NUT MOUNTING

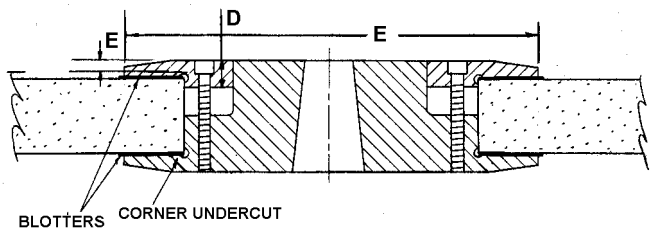

FIGURE 15
MULTIPLE SCREW MOUNTING

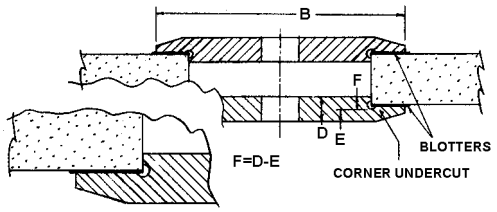

FIGURE 16

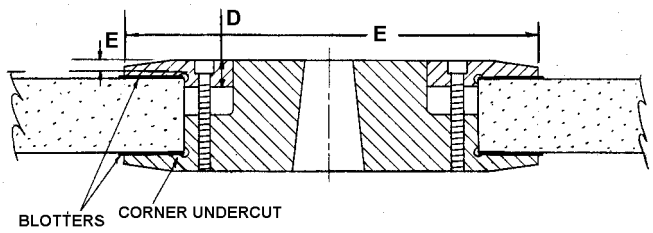

FIGURE 17
MULTIPLE SCREW MOUNTING

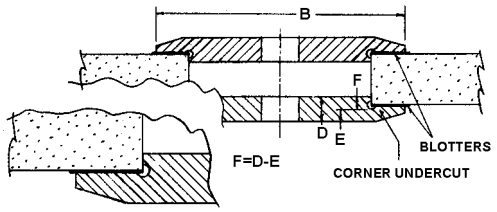

FIGURE 18
CENTRAL NUT MOUNTING

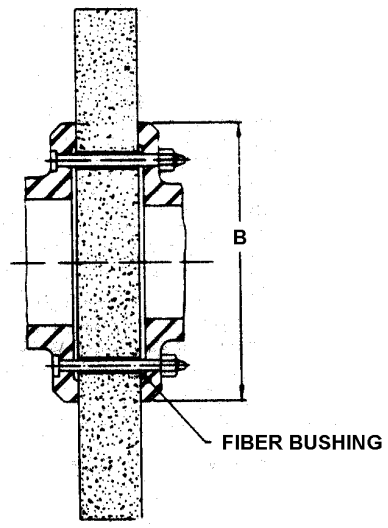

FIGURE 19
DOUBLE END SPINDLE

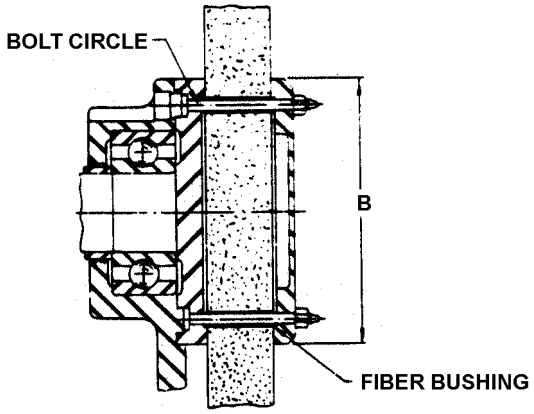

FIGURE 20
OPEN END SPINDLE

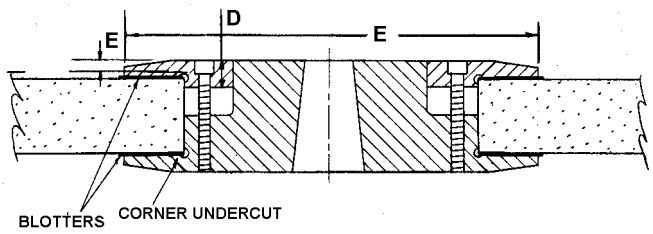

FIGURE 21

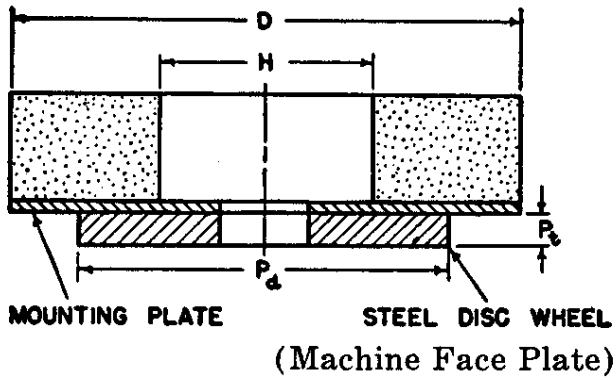

FIGURE 22

P_d shall never be less than $\frac{D + H}{2}$ nor shall the difference between D and P_d exceed 2 inches. It is recommended that P_d equal D wherever practical.

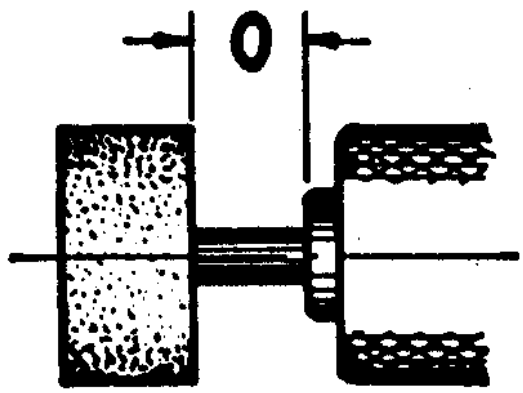

FIGURE 23
DEFINING OVERHAND DIMENSIONS IN TABLES 23 TO 31

R 408.10199 Tables.
Rule 199. Tables 1 to 31 read as follows:

TABLES 1 TO 31

TABLE 1 GUARD EXPOSURE ANGLE		
Grinder Type	**Exposure Above or Below Horizontal Plane**	**Total Exposure**
Bench and Floor	65 degrees above	*90 degrees
Cylindrical Grinder	65 degrees above	180 degrees
Surface Grinder	15 degrees below	150 degrees
Cut-off Machine	15 degrees below	150 degrees
Swing Frame		180 degrees
Snagging		180 degrees
Top	30 degrees above	60 degrees
Portable		180 degrees
Masonry and Concrete Saws	35 degrees above	180 degrees
Tool and Cutter Grinder		180 degrees
*Whenever the nature of the work requires contact with the abrasive wheel below the horizontal plane of the spindle, the exposure shall not exceed 125 degrees.		

TABLE 2 GUIDE FOR CONSTRUCTION OF DRAWN STEEL GUARDS FOR WHEEL 2” THICK AND LESS, 8” AND LESS IN DIAMETER					
***Material Used in Construction of Guard Hot Rolled Steel SAE 1008 Min. Tensile Strength 60,000 PSI for speeds up to (SFPM)**	**Maximum Thickness of Wheel, Inches**	**2 to 5 inches**		**Above 5 to 8 inches**	
		A Inches	**B Inches**	**A Inches**	**B Inches**
9,500	2	1/16	1/16	3/32	1/16
12,500	2	3/32	1/16	3/32	3/32
17,000	1	3/32	1/16	1/8	3/32
*The recommendations listed in the above table are guides for the conditions stated. Other material, designs or dimensions affording equal or superior protection are also acceptable.					

TABLE 3 DRAWN STEEL GUARD FOR PORTABLE GRINDERS USED WITH DEPRESSED CENTER WHEELS					
Material Used in Construction of Guard		**Thickness of Wheel**	**Wheel Diameter Inches**	**A Inches**	**B Inches**
For speeds up to 14,200 SFPM	*Hot Rolled Steel SAE 1008 min. tensile strength 60,000 PSI	3/8 inches or less	2 to 9	1/16	1/2
		Over 3/8 to 1 inch	7 to 9	3/32	1 1/8
*The recommendations listed in the above table are guides for the conditions stated. Other material, designs or dimensions affording equal or superior protection are also acceptable.					

TABLE 4 TABLE FOR FABRICATED STEEL GUARDS FOR SQUARED OR TAPERED CUP WHEELS			
Wheel Diameter*	**Back Thickness**	***Band Thickness**	**Bolts Connecting Band to Back Member**
4”	.056 – .064	.112 – .128	3 5/16 – 18
5”	.082 – .098	.112 – .128	3 5/16 – 18
6”	.082 – .098	.112 – .128	3 3/8 – 16

TABLE 5 TABLE FOR DRAWN STEEL GUARDS FOR TAPERED CUP WHEELS									
Wheel Diameter	**“A”**	**No.**	**Bolts to Machine**	**No.**	**Bolts Connecting Hood to Band**	**Washer Back Plate Thickness**	**“B” O.D.**	***“C” Hood**	***”D” Band**
4”	1 7/8	4	1/4 – 20	3	5/16 – 18 x 3/4	.097 – .112	4	.056 – .064	.112 – .128
5”	2 1/8	4	5/16 – 18	3	5/16 – 18 x 3/4	.097 – .112	4 3/4	.082 – .098	.112 – .128
6”	2 5/8	4	5/16 – 18	4	5/16 – 18 x 3/4	.097 – .112	4 3/4	.082 – .098	.112 – .128
*The recommendations listed in the above tables are guides for the conditions stated. Other material, designs or dimensions affording equal or superior protection are also acceptable.									

TABLE 6
MINIMUM BASIC THICKNESSES OF PERIPHERAL AND SIDE MEMBERS FOR SAFETY GUARDS

Material Used in Construction of Guard		Maximum Thickness of Grinding Wheel	GRINDING WHEEL DIAMETERS													
			3 to 6 inches		Over 6 to 12 inches		Over 12 to 16 inches		Over 16 to 20 inches		Over 20 to 24 inches		Over 24 to 30 inches		Over 30 to 48 inches	
			A	B	A	B	A	B	A	B	A	B	A	B	A	B
		Inches	Inches		Inches		Inches		Inches		Inches		Inches		Inches	
Material Satisfactory* for speeds up to 8,000 SFPM	Cast Iron (Min. Tensile Strength 20,000 PSI) Class 20	2	1/4	1/4	3/8	5/16	1/2	3/8	5/8	1/2	7/8	5/8	1	3/4	1 1/4	1
		4	5/16	5/16	3/8	5/16	1/2	3/8	3/4	5/8	1	5/8	1 1/8	3/4	1 3/8	1
		6	3/8	5/16	1/2	7/16	5/8	1/2	1	5/8	1 1/8	3/4	1 1/4	7/8	1 1/2	1 1/8
		8			5/8	9/16	7/8	3/4	1	3/4	1 1/8	3/4	1 1/4	7/8	1 1/2	1 1/8
		10			3/4	11/16	7/8	3/4	1	3/4	1 1/8	3/4	1 1/4	7/8	1 1/2	1 1/8
		16					1 1/8	1	1 1/4	1	1 5/16	1	1 7/16	1 1/16	1 3/4	1 3/8
		20							1 3/8	1 1/8	1 3/8	1 1/8	1 1/2	1 3/8	2	1 5/8
Material Satisfactory * for speeds up to 9,000 SFPM	Malleable Iron (Min. Tensile Strength 50,000 PSI) Grade 32510	2	1/4	1/4	3/8	5/16	1/2	3/8	5/8	1/2	3/4	5/8	7/8	3/4	1	7/8
		4	5/16	5/16	3/8	5/16	1/2	3/8	5/8	1/2	3/4	5/8	7/8	3/4	1 1/8	7/8
		6	3/8	5/16	1/2	7/16	5/8	1/2	3/4	5/8	7/8	5/8	1	3/4	1 1/4	7/8
		8			1/2	7/16	5/8	1/2	3/4	5/8	7/8	5/8	1	3/4	1 1/4	7/8
		10			1/2	7/16	5/8	1/2	3/4	5/8	7/8	5/8	1	3/4	1 1/4	7/8
		16					13/16	11/16	13/16	11/16	1	3/4	1 1/8	7/8	1 3/8	1
		20							7/8	3/4	1	3/4	1 1/8	7/8	1 1/2	1 1/8
Material Satisfactory* for speeds up to 16,000 SFPM	Steel Castings (Min. Tensile Strength 60,000 PSI) Grade V60-30	2	1/4	1/4	5/16	5/16	3/8	3/8	1/2	7/16	5/8	1/2	3/4	5/8	7/8	3/4
		4	1/4	1/4	1/2	1/2	1/2	1/2	9/16	1/2	5/8	1/2	3/4	5/8	1	3/4
		6	3/8	1/4	3/4	5/8	3/4	5/8	3/4	5/8	13/16	11/16	13/16	11/16	1 1/8	3/4
		8			7/8	3/4	7/8	3/4	7/8	3/4	7/8	3/4	15/16	13/16	1 3/8	1
		10			1	7/8	1	7/8	1	7/8	1 1/8	15/16	1 1/8	1	1 7/16	1 1/16
		16					1 1/4	1 1/8	1 1/4	1 1/8	1 1/4	1 1/8	1 1/4	1 1/8	1 13/16	1 7/16
		20							1 3/8	1 1/4	1 3/8	1 1/4	1 7/16	1 5/16	2 1/16	1 11/16
	Structural Steel (Min. Tensile 60,000 PSI)	2	1/8	1/16	5/16	1/4	5/16	1/4	5/16	1/4	5/16	1/4	3/8	5/16	1/2	3/8
		4	1/8	1/16	3/8	5/16	3/8	5/16	3/8	5/16	3/8	5/16	3/8	5/16	1/2	3/8
		6	3/16	1/16	1/2	3/8	7/16	3/8	7/16	3/8	7/16	3/8	7/16	3/8	3/4	1/2
		8			1/2	3/8	9/16	7/16	9/16	7/16	9/16	7/16	5/8	1/2	3/4	1/2
		10			9/16	7/16	5/8	1/2	5/8	1/2	5/8	1/2	5/8	1/2	7/8	5/8
		16					5/8	9/16	3/4	5/8	3/4	5/8	13/16	11/16	1 1/16	13/16
		20							13/16	11/16	13/16	11/16	7/8	3/4	1 3/16	15/16

*The recommendations listed in the above table are guides for the conditions stated.
Other material, designs or dimensions affording equal or superior protections are also acceptable.

TABLE 7 MINIMUM BASIC THICKNESS FOR PERIPHERAL AND SIDE MEMBERS FOR SAFETY GUARDS USED WITH CUTTING-OFF WHEELS												
Material Used in Construction of Guard	**Maximum Thickness of Cutting Off Wheel**	**Speed Not to Exceed**	**Cutting Off Wheel Diameters**									
			6 to 11 inches		**Over 11 to 20 inches**		**Over 20 to 30 inches**		**Over 30 to 48 inches**		**Over 48 to 72 inches**	
			A	**B**	**A**	**B**	**A**	**B**	**A**	**B**	**A**	**B**
*Structural Steel (Min. Tensile Strength 60,000 PSI)	1/2 inch or less	14,200 SFPM	1/16	1/16	3/32	3/32	1/8	1/8	3/16	3/16	1/4	1/4
	1/2 inch or less	16,000 SFPM	3/32	1/8	1/8	1/8	3/16	1/8	1/4	3/16	5/16	1/4
*The recommendations listed in the above table are guides for the conditions stated. Other material, designs or dimensions affording equal or superior protection are also acceptable.												

TABLE 8 DIMENSIONAL REQUIREMENTS FOR CONSTRUCTION OF FABRICATED GUARDS MAXIMUM WHEEL SPEED 10,000 SFPM								
	A	**B**	**C**	**D**	**E**	**F**	**G**	**H**
Diameter of Wheel	**Length of Tongue**	**Diameter of Bolts Medium Carbon Quenched & Tempered**	**Size of Angle Supports Tongue and Rest**	**Diameter of Rivets for Supports**	**Diameter of End Connecting Bolts**	**Thickness of Tongue**	**Maximum Space Between New Wheel and Guard at Periphery**	**Maximum Inside Width of Guard**
Inches	**Inches**	**Inches**	**Inches**	**Inches**	**Inches**	**Inches**	**Inches**	**Inches**
Under 12	3 1/2	9/16	1 1/2 x 1 1/2 x 5/16	4 ea. @ 1/2	1/2	1/4	1 1/2	1 1/2 wider than wheel
16	5	5/8	2 x 2 x 5/16	4 ea. @ 5/8	9/16	5/16	1 1/2	2 wider than wheel
24	6	3/4	2 x 2 x 1/2	6 ea. @ 5/8	5/8	1/2	1 1/2	2 wider than wheel
30	7	11/16	2 1/2 x 2 1/2 x 1/2	6 ea. @ 11/16	11/16	1/2	1 1/2	2 wider than wheel
NOTE: Column D assumes low carbon steel (38,000 PSI tensile) rivets. Two rivets per bar 12 and 16” diameter. For rivets per bar 24 and 30” diameter.								

TABLE 9 GUIDE FOR CONSTRUCTION OF BAND TYPE GUARDS Maximum Wheel Speed 7000 SFPM For Ring, Segment, Nut Inserted Wheels				
Maximum Material Specifications	**Diameter of Wheel**	**Minimum Thickness of Band A**	**Minimum Diameter of Rivets**	**Maximum Distance Between Centers of Rivets**
	Inches	**Inches**	**Inches**	**Inches**
*Hot Rolled Steel SAE 1008	Under 8	1/16	3/16	3/4
	8 to 24	1/8	1/4	1
	Over 24 to 30	1/4	3/8	1 1/4
* The recommendations listed in the above table are guides for the conditions stated. Other material, designs or dimensions affording equal or superior protection are also acceptable.				

TABLE 10 GUIDE FOR CONSTRUCTION OF BAND TYPE GUARDS EXPOSURE VERSUS WHEEL THICKNESS	
Overall Thickness of Wheel (T) Inches	**Maximum Exposure of Wheel (C) Inches**
1/2	1/4
1	1/2
2	3/4
3	1
4	1 1/2
5 and over	2

TABLE 11 MINIMUM DIMENSIONS FOR STRAIGHT RELIEVED FLANGES					
A*	**B**	**C**		**D**	**E**
Diameter of Wheel	****Minimum Outside Diameter of Flanges**	**Radial Width of Bearing Surface**		**Minimum Thickness of Flange at Bore**	**Minimum Thickness of Flange at Edge of Recess**
		Minimum	**Maximum**		
Inches	**Inches**	**Inches**	**Inches**	**Inches**	**Inches**
1	3/8	1/16	1/8	1/16	1/16
2	3/4	1/8	3/16	1/8	3/32
3	1	1/8	3/16	3/16	3/32
4	1 3/8	1/8	3/16	3/16	1/8
5	1 3/4	3/16	1/4	1/4	1/8
6	2	1/4	1/2	3/8	3/16
7	2 1/2	1/4	1/2	3/8	3/16
8	3	1/4	1/2	3/8	3/16
10	3 1/2	5/16	5/8	3/8	1/4
12	4	5/16	5/8	1/2	5/16
14	4 1/2	3/8	3/4	1/2	5/16
16	5 1/2	1/2	1	1/2	5/16
18	6	1/2	1	5/8	3/8
20	7	5/8	1 1/4	5/8	3/8
22	7 1/2	5/8	1 1/4	5/8	7/16
24	8	3/4	1 1/4	5/8	7/16
26	8 1/2	3/4	1 1/4	5/8	1/2
28	10	7/8	1 1/2	3/4	1/2
30	10	7/8	1 1/2	3/4	5/8
36	12	1	2	7/8	3/4
42	14	1	2	7/8	3/4
48	16	1 1/4	2	1 1/8	1
60	20	1 1/4	2	1 1/4	1 1/8
72	24	1 1/2	2 1/2	1 3/8	1 1/4

* Flanges for wheels under 2 inches diameter may be unrelieved and shall be maintained flat and true.
** See rule 141.

TABLE 12 MINIMUM DIMENSIONS FOR STRAIGHT UNRELIEVED FLANGES FOR WHEELS WITH THREADED INSERTS OR PROJECTING STUDS		
A	**B***	**T**
Diameter of Wheel	**Minimum Outside Diameter of Flange**	**Minimum Thickness of Flange**
Inches	**Inches**	**Inches**
1	5/8	1/8
2	1	1/8
3	1	3/16
4	1 3/8	3/16
5	1 3/4	1/4
6	2	3/8
* NOTE: Must be large enough to extend beyond the bushing. Where prong anchor or cupback bushing are used, this footnote does not apply.		

TABLE 13 MINIMUM DIMENSIONS FOR STRAIGHT ADAPTOR FLANGE FOR ORGANIC BONDED WHEELS OVER 1 1/4 INCH THICK					
		B	**D**	**E**	**F***
Wheel Diameter	**Wheel Hole Diameter**	**Minimum Flange Diameter**	**Minimum Thickness of Flange at Bore**	**Minimum Thickness of Flange at Edge of Undercut**	**(D-E) Minimum Thickness**
Inches	**Inches**	**Inches**	**Inches**	**Inches**	**Inches**
12 to 14	4	6	7/8	3/8	1/2
	5	7	7/8	3/8	1/2
	6	8	7/8	3/8	1/2
Larger than 14 to 18	4	6	7/8	3/8	1/2
	5	7	7/8	3/8	1/2
	6	8	7/8	3/8	1/2
	7	9	7/8	3/8	1/2
	8	10	7/8	3/8	1/2
Larger than 18 to 24	6	8	1	1/2	1/2
	7	9	1	1/2	1/2
	8	10	1	1/2	1/2
	10	12	1	1/2	1/2
	12	14	1	1/2	1/2
Larger than 24 to 30	12	15	1	1/2	1/2
Larger than 30 to 36	12	15	1 3/8	7/8	1/2
* For wheels under 1 1/4 inch thick F dimension shall not exceed 40% of wheel thickness.					

TABLE 14
MINIMUM DIMENSIONS FOR STRAIGHT FLANGES
FOR AUTOMATIC SNAG MACHINES 12,500 S.F.P.M. TO 16,500 S.F.P.M.[1]

Wheel Diameter	Wheel Hole Diameter	B Minimum Flange Diameter	D Minimum Thickness of Flange at Bore	E Minimum Thickness of Flange at Edge of Undercut	F* (D-E) Minimum Thickness
20	6	8	1	1/2	1/2
20	8	10	1 1/2	3/4	3/4
24	12	15	1 1/2	3/4	3/4
30	12	15	1 1/2	3/4	3/4
36	12	15	1 1/2	3/4	3/4

[1] FLANGES shall be of steel, quality SAE 1040 or equivalent, annealed plate, heat treated to R_c 25-30.
* For wheels under 1 1/4 inch thick F dimension shall not exceed 40% of wheel thickness.

TABLE 15
MINIMUM DIMENSIONS FOR STRAIGHT ADAPTOR FLANGE
FOR ORGANIC BONDED WHEELS USED ON SWING FRAME GRINDERS
AT 12,500 S.F.P.M. TO 16,500 S.F.P.M.[1]

Wheel Diameter	Wheel Hole Diameter	B Minimum Flange Diameter	D Minimum Thickness of Flange at Bore	E Minimum Thickness of Flange at Edge of Undercut	F* (D-E) Minimum Thickness
20	6	8	1	1/2	1/2
20	8	10	1	1/2	1/2
24	12	15	1	1/2	1/2
30	12	15	1	1/2	1/2

[1] FLANGES shall be of steel, quality SAE 1040 or equivalent, annealed plate, heat treated to R_c 25-30.
* For wheels under 1 1/4 inch thick F dimension shall not exceed 40% of wheel thickness.

TABLE 16
MINIMUM DIMENSIONS FOR STRAIGHT FLANGES FOR HEAVY DUTY,
HIGH SPEED FLOOR STAND GRINDERS[1]
12,500 S.F.P.M. TO 16,5000 S.F.P.M.

Wheel Diameter	Hole Diameter	B Minimum Flange Diameter	D Minimum Thickness of Flange at Bore
20	6 thru 10	8 thru 12	1
24	12	15	1
30	12	15	1

[1] FLANGES shall be of steel, quality SAE 1040 or equivalent, annealed plate, heat treated to R_c 25-30.

TABLE 17 MINIMUM DIMENSIONS FOR FLANGES FOR ARBORLESS WHEELS – ORGANIC BOND				
Wheel Diameter	**Bolt Circle**	**"B" Minimum Flange Diameter**	**Torque Used in Mounting Ft. Lbs.**	**Minimum Hole Size Dimensions. (8 holes) (holes equally spaced)**
16	6 1/2	8 7/8	30-40	All mounting holes shall be 17/32" inside diameter, with a fiber bushing in place, not to exceed 21/32" outside diameter.
20	8	10 3/8	30-40	
24	9 5/8	12	40-60	
30	12	14 3/8	40-60	

TABLE 18 MINIMUM DIMENSIONS FOR STRAIGHT FLANGES USED AS WHEEL SLEEVES FOR PRECISION GRINDING ONLY				
		B	**D**	**E**
Wheel Diameter	**Wheel Hole Diameter**	**Minimum Outside Diameter of Flange**	**Minimum Thickness of Flange at Bore**	**Minimum Thickness of Flange at Edge of Undercut**
Inches	**Inches**	**Inches**	**Inches**	**Inches**
12 to 14	5	7	1/2	7/16
Larger than 14 to 20	5	7	5/8	7/16
	6	8	5/8	7/16
	8	10	5/8	7/16
	10	11 1/2	5/8	7/16
	12	13 1/2	5/8	7/16
Larger than 20 to 30	8	10	3/4	1/2
	10	11 1/2	3/4	1/2
	12	13 1/2	3/4	1/2
	16	17 1/2	3/4	1/2
Larger than 30 to 42	12	13 1/2	3/4	1/2
	16	17 1/2	3/4	1/2
	18	19 1/2	3/4	1/2
	20	21 1/2	3/4	1/2
Larger than 42 to 60	16	20	1	3/4
	20	24	1	3/4
	24	29	1 1/8	7/8
Note: These flanges may be clamped together by means of a central nut, or by a series of bolts or some other equivalent means of fastening. For hole sizes smaller than shown in this table, use table 9.				

TABLE 19 MINIMUM THICKNESS OF STEEL DISC WHEELS (MACHINE FACE PLATE) FOR MOUNTING ABRASIVE DISCS	
Diameter Inches	**Minimum Thickness Inches**
8 to 14 inclusive	1/2
15 to 18 inclusive	5/8
19 to 26 inclusive	3/4
27 to 36 inclusive	7/8
37 to 40 inclusive	1
41 to 72 inclusive	1 1/8

TABLE 20 MINIMUM THICKNESS OF STEEL DISC WHEELS FOR MACHINES USING PLATE MOUNTED WHEELS HAVING THIN MOUNTING PLATES	
Abrasive Disc Diameter D (Inches)	**Minimum Thickness Pt (Inches)**
12 and smaller	3/8
14 to 16 inclusive	1/2
17 to 18 inclusive	5/8
19 to 26 inclusive	3/4
27 to 36 inclusive	7/8

TABLE 21
STANDARD MAXIMUM SPEEDS IN SURFACE FEET PER MINUTE

Classification Number	Types of Wheels (See Section 1 for Definitions)	Inorganic Bonds		Organic Bonds			
		Low Strength	Medium Strength	High Strength	Low Strength	Medium Strength	High Strength
		OPERATING SPEED SHALL NOT EXCEED:					
		SFPM	SFPM	SFPM	SFPM	SFPM	SFPM
1	Type 1 – Straight Wheels – except classifications 6, 7, 9, 10, 11, 12 and 13 below	5,500	6,000	6,500	6,500	8,000	9,500
	Type 4* – Taper Side Wheels						
	Types 5, 7, 20, 21, 22, 23, 24, 25, 26 Recessed, Dovetailed and/or relieved wheels. (Except Classification 7 below)						
	Type 12 – Dish Wheels						
	Type 13 – Saucer Wheels						
	Types 16, 17, 18, 19 – Cones and Plugs						
2	Type 2 – Cylinder Wheels including plate mounted, inserted nut and projecting stud – Segments	5,000	5,500	6,000	5,000	6,000	7,000
3	Cup Shape Tool Grinding Wheels (For Fixed Base Machines) Type 6 – Straight Side Cups Type 11 – Flaring Cups	4,500	5,000	6,000	6,000	7,500	8,500

TABLE 21
STANDARD MAXIMUM SPEEDS IN SURFACE FEET PER MINUTE

Classification Number	Types of Wheels (See Section 1 for Definitions)	Inorganic Bonds		Organic Bonds			
		Low Strength	Medium Strength	High Strength	Low Strength	Medium Strength	High Strength
		OPERATING SPEED SHALL NOT EXCEED:					
		SFPM	SFPM	SFPM	SFPM	SFPM	SFPM
4	Cup Shape Snagging Wheels (For Portable Machines) Type 6 – Straight Side Cups Type 11 – Flaring Cups	4,500	5,500	6,500	6,000	8,000	9,500
5	Abrasive Discs: Plate Mounted Inserted Nut and Projecting Stud: Solid or Segmented	5,500	6,000	6,500	5,500	7,000	8,500
6†	Reinforced Wheels Type 1 Max. Dia. 4” Max. Thickness 1/4"	X	X	X	9,500	12,500	16,000
	Max. Dia. 10” Max. Thickness 1/2"	X	X	X	9,500	12,500	14,200
	All Other Dias. and Thicknesses	X	X	X	9,500	12,500	12,500
	Reinforced Wheels – Types 27 and 28 Max. Dia. 9” Max. Thickness 3/8”	X	X	X	9,500	12,500	14,200
	Max. Dia. 9” – Over 3/8” Thick	X	X	X	X	9,500	11,000
7	Type 1 Wheels for Bench and Pedestal Grinders and Types 1 and 5 Surface Grinders in following sizes only. 7” dia. up to 2” thick and up to 2” hole	5,500	6,325	6,600	6,500	8,000	9,500
	8” dia. up to 2” thick and up to 2” hole	5,500	6,325	7,550	6,500	8,000	9,500
8	Diamond Wheels Cutting-Off – IAI, IAIR, IAIRS**	X	X	16,000	X	X	16,000
	Metal Bond	X	X	12,000	X	X	X
	Resin Bond	X	X	X	X	X	9,500
	Vitrified Bond	X	X	6,500	X	X	X
9	Cutting Off Wheels Type 1 and 27A Larger than 16” dia., Including Reinforced Organic	X	X	X	9,500	12,000	14,200
10	Cutting-Off Wheels Type 1 and 27A 16” dia., and smaller – Including Reinforced Organic	X	X	X	9,500	12,000	16,000
11	Thread and Flute Grinding Wheels	8,000	10,000	12,000	8,000	10,000	12,000
12	Crankshaft and Camshaft Grinding Wheels	5,500	8,000	8,500	6,500	8,000	9,500
13	Type 1 Snagging Wheels 16” dia. and Larger, Organic Bond, Non Reinforced Used on Specifically Designed Swing Frame and Mechanical Grinders	X	X	X	X	X	12,500
14	Internal Wheels – Type 1 and 5 Maximum dia. 6”	5,500	8,000	8,500	6,500	8,500	9,500

* Non-standard Shape.
† Classification 6 excludes cut-off wheels.
** Standard Diamond Wheel Shapes.

TABLE 22 WHEEL MANUFACUTERS TESTING SPEEDS		
Class of Wheel	**Operating Speed Surface Feet Per Minute**	**Minimum Test Factor***
Cutting-off Wheels	All speeds	1.20
All Bonds and Wheel Types (Except Cutting-off Wheels)	Up to 5,000	1.25
All Bonds and Wheel Types (Except Cutting-off wheels)	Faster than 5,000	1.50
* Actual operating speed shall be multiplied by this test factor to establish minimum speed at which wheels shall be tested by the wheel manufacturer.		

TABLE 23 GROUP W – (PLAIN WHEELS) MAXIMUM OPERATING SPEEDS (RPM) FOR 3/32” MANDRELS							
Shape No.	Wheel Diameter Inches	Wheel Thickness Inches	1/2" Overhang & Thd. Mdls.	Overhang – Dimension O			
				1”	1 1/2"	2”	2 1/2"
W 141	3/32	5/32	93,750	53,250	37,500	25,500	16,500
W 142	3/32	1/4	93,750	53,250	37,500	25,500	16,500
W 143	1/8	1/8	93,750	53,250	37,500	25,500	16,500
W 144	1/8	1/4	93,750	53,250	37,500	25,500	16,500
W 145	1/8	3/8	88,500	49,500	35,250	24,000	15,750
W 146	1/8	1/2	81,000	43,750	31,500	22,500	15,000
W 147	5/32	1/32	93,750	53,250	37,500	25,500	16,500
W 148	5/32	1/16	93,750	53,250	37,500	25,500	16,500
W 149	5/32	1/4	90,750	50,250	36,000	24,750	15,750
W 150	3/16	1/16	93,750	53,250	37,500	25,500	16,500
W 151	3/16	1/8	93,750	53,250	37,500	25,500	16,500
W 152	3/16	1/4	83,250	47,250	33,000	23,250	15,000
W 153	3/16	3/8	73,500	42,000	28,500	21,000	13,500
W 154	3/16	1/2	66,000	38,250	25,500	18,750	12,750
W 155	13/64	1/4	78,000	44,250	30,750	21,750	14,250
W 156	1/4	1/32	93,750	53,250	37,500	25,500	16,500
W 157	1/4	1/16	93,750	53,250	37,500	25,500	16,500
W 158	1/4	1/8	93,750	53,250	37,500	25,500	16,500
W 159	1/4	3/16	78,000	44,250	30,750	21,750	14,250
W 160	1/4	1/4	69,000	42,000	27,750	18,750	13,500
W 161	1/4	5/16	66,000	39,750	24,750	17,250	12,750
W 162	1/4	3/8	57,000	34,500	23,250	16,500	11,250
W 165	5/16	1/16	93,000	51,750	37,500	25,500	16,500
W 166	5/16	1/8	84,750	48,750	28,500	19,500	14,250
W 167	5/16	1/4	61,500	39,000	24,750	18,000	12,000
W 168	5/16	5/16	56,250	33,750	22,500	16,500	12,000
W 169	5/16	3/8	48,000	28,500	20,250	15,000	11,250
W 170	5/16	1/2	39,750	26,250	16,500	12,750	9,750
W 171	5/16	3/4	27,750	19,500	13,500	10,500	8,250
W 172	3/8	1/16	85,500	48,750	33,750	24,000	15,000
W 173	3/8	1/8	71,250	46,500	30,000	19,500	12,750
W 174	3/8	1/4	54,000	32,250	21,000	15,000	10,500
W 175	3/8	3/8	41,250	24,000	18,000	12,750	9,750
W 176	3/8	1/2	33,750	21,000	15,750	12,000	9,000

TABLE 24 GROUP W – (PLAIN WHEELS) MAXIMUM OPERATING SPEEDS (RPM) FOR 1/8” MANDRELS							
Shape No.	Wheel Diameter Inches	Wheel Thickness Inches	1/2" Overhang & Thd. Mdls.	Overhang – Dimension O			
				1”	1 1/2"	2”	2 1/2"
W 143	1/8	1/8	105,000	64,500	46,650	32,400	21,370
W 144	1/8	1/4	105,000	64,500	46,650	32,400	21,370
W 145	1/8	3/8	105,000	64,500	46,650	32,400	21,370
W 146	1/8	1/2	105,000	64,500	46,650	32,400	21,370
W 151	5/16	1/8	105,000	64,500	46,650	32,400	21,370
W 152	3/16	1/4	105,000	64,500	46,650	32,400	21,370
W 153	3/16	3/8	80,850	52,500	37,500	26,250	17,620
W 154	3/16	1/2	70,500	46,500	31,500	21,970	15,220
W 157	1/4	1/16	123,000	65,525	47,770	33,150	21,750
W 158	1/4	1/8	105,000	64,500	46,650	32,400	21,370
W 159	1/4	3/16	92,400	57,370	39,370	27,900	18,900
W 160	1/4	1/4	81,370	51,000	34,120	24,000	16,870
W 161	1/4	5/16	77,250	45,970	30,900	22,500	16,120
W 162	1/4	3/8	68,400	42,370	28,870	20,850	15,000
W 163	1/4	1/2	60,000	38,020	26,250	18,750	13,870
W 164	1/4	3/4	45,900	30,000	21,750	15,900	11,850
W 165	5/16	1/16	107,400	62,470	41,250	29,250	20,250
W 166	5/16	1/8	96,970	57,000	35,620	25,120	18,000
W 167	5/16	1/4	75,000	47,570	31,120	22,500	15,750
W 168	5/16	5/16	68,400	41,770	28,650	21,000	15,000
W 169	5/16	3/8	61,650	37,720	27,000	19,870	14,250
W 170	5/16	1/2	52,500	33,000	23,020	16,650	12,600
W 171	5/16	3/4	37,120	25,500	18,750	14,620	10,020
W 172	3/8	1/16	99,370	59,250	41,020	29,250	20,250
W 173	3/8	1/8	87,600	53,250	35,250	24,750	17,250
W 174	3/8	1/4	69,000	41,250	27,750	20,400	15,000
W 175	3/8	3/8	54,000	33,000	24,150	18,000	13,500
W 176	3/8	1/2	45,370	28,500	21,000	15,900	12,150
W 177	3/8	3/4	33,750	23,250	17,620	13,650	10,350
W 178	3/8	1	26,250	18,750	14,250	10,870	8,250
W 181	1/2	1/16	76,390	55,500	36,750	25,500	17,850
W 182	1/2	1/8	73,500	43,650	29,100	20,770	15,450
W 183	1/2	1/4	51,750	31,870	22,500	17,250	12,900
W 184	1/2	3/8	41,020	26,400	19,500	15,000	11,400
W 185	1/2	1/2	34,500	22,500	16,870	13,120	9,900
W 186	1/2	3/4	26,250	17,400	12,750	9,750	8,020
W 187	1/2	1	20,620	13,870	10,120	7,870	6,370
W 190	5/8	1/16	61,120	48,000	31,500	22,650	16,870
W 191	5/8	1/8	58,870	34,500	25,120	18,900	14,250
W 192	5/8	1/4	43,120	27,370	19,870	15,220	11,620
W 193	5/8	3/8	32,250	23,020	16,500	12,520	9,750

TABLE 24 GROUP W – (PLAIN WHEELS) MAXIMUM OPERATING SPEEDS (RPM) FOR 1/8” MANDRELS							
Shape No.	Wheel Diameter Inches	Wheel Thickness Inches	1/2" Overhang & Thd. Mdls.	Overhang – Dimension O			
				1”	1 1/2"	2”	2 1/2"
W 194	5/8	1/2	29,400	19,120	13,500	10,500	8,250
W 195	5/8	3/4	22,120	14,250	10,120	7,650	6,150
W 196	5/8	1	17,620	11,620	8,100	6,150	5,100
W 199	3/4	1/16	50,930	44,770	30,000	21,750	15,750
W 200	3/4	1/8	50,930	33,520	23,850	17,850	13,350
W 201	3/4	1/4	38,250	24,370	17,400	13,270	9,970
W 202	3/4	3/8	30,600	19,500	13,500	10,120	7,800
W 203	3/4	1/2	25,500	15,900	10,870	8,250	6,600
W 204	3/4	3/4	18,900	12,000	8,400	6,220	5,250
W 210	7/8	1/16	43,650	35,250	25,720	18,900	14,320
W 211	7/8	1/8	43,650	27,900	20,400	15,820	12,220
W 212	7/8	1/4	33, 750	20,400	14,400	11,020	9,000
W 213	7/8	3/8	27,000	16,870	11,250	8,250	6,600
W 215	1	1/8	38,200	24,900	18,000	13,870	10,500
W 216	1	1/4	30,520	18,600	12,750	9,520	7,500

TABLE 25 GROUP W – (PLAIN WHEELS) MAXIMUM OPERATING SPEEDS (RPM) FOR 3/16” MANDRELS							
Shape No.	Wheel Diameter Inches	Wheel Thickness Inches	1/2" Overhang & Thd. Mdls	Overhang – Dimension O			
				1”	1 1/2"	2”	2 1/2"
W 158	1/4	1/8	121,500	66,750	48,000	36,000	26,250
W 159	1/4	3/16	112,500	63,000	47,250	34,650	25,120
W 160	1/4	1/4	103,500	60,000	44,250	33,000	24,000
W 161	1/4	5/16	93,750	58,120	42,750	31,870	22,500
W 162	1/4	3/8	89,250	56,250	41,250	30,000	21,750
W 163	1/4	1/2	78,750	52,500	39,000	28,870	20,620
W 164	1/4	3/4	62,250	39,750	30,000	23,250	16,500
W 166	5/16	1/8	118,500	65,250	47,250	35,250	25,500
W 167	5/16	1/4	100,500	58,500	43,500	35,620	23,250
W 168	5/16	5/16	93,000	57,000	42,000	30,750	22,120
W 169	5/16	3/8	87,370	55,350	40,870	28,880	21,000
W 170	5/16	1/2	76,500	47,250	34,500	25,500	18,750
W 171	5/16	3/4	57,000	37,500	27,750	21,750	15,750
W 173	3/8	1/8	101,900	65,250	46,500	34,500	24,750
W 174	3/8	1/4	98,850	57,750	42,750	32,250	23,250
W 175	3/8	3/8	81,750	50,620	36,750	27,750	20,250

TABLE 25 GROUP W – (PLAIN WHEELS) MAXIMUM OPERATING SPEEDS (RPM) FOR 3/16” MANDRELS							
Shape No.	Wheel Diameter Inches	Wheel Thickness Inches	1/2" Overhang & Thd. Mdls	Overhang – Dimension O			
				1”	1 1/2"	2”	2 1/2"
W 176	3/8	1/2	66,750	43,120	31,350	23,620	17,400
W 177	3/8	3/4	54,000	36,000	26,250	20,250	15,000
W 178	3/8	1	42,000	29,250	22,500	17,250	12,900
W 182	1/2	1/8	76,390	56,250	39,870	29,250	21,750
W 183	1/2	1/4	75,000	47,400	33,370	24,900	18,750
W 184	1/2	3/8	57,750	39,750	29,250	21,750	15,750
W 185	1/2	1/2	49,870	33,750	25,500	19,500	14,620
W 186	1/2	3/4	39,000	28,120	21,370	15,750	12,000
W 187	1/2	1	32,250	23,250	18,370	13,500	10,500
W 188	1/2	1 1/2	22,870	17,620	13,870	11,250	----
W 189	1/2	2	17,250	13,500	10,500	8,620	----
W 191	5/8	1/8	61,120	51,370	36,370	27,000	20,250
W 192	5/8	1/4	61,120	43,500	30,750	23,400	18,000
W 193	5/8	3/8	52,500	34,870	25,500	18,750	15,000
W 194	5/8	1/2	44,400	31,120	23,400	18,000	13,500
W 195	5/8	3/4	34,500	24,000	18,370	14,250	10,500
W 196	5/8	1	25,870	18,900	15,000	11,620	9,370
W 197	5/8	2	14,770	11,770	8,700	7,270	----
W 200	3/4	1/8	50,930	48,750	33,750	25,500	19,500
W 201	3/4	1/4	50,930	37,500	27,900	21,370	16,500
W 202	3/4	3/8	45,750	31,500	24,370	18,000	13,870
W 203	3/4	1/2	39,750	27,370	20,620	15,900	12,000
W 204	3/4	3/4	29,250	20,250	15,000	12,000	9,370
W 205	3/4	1	24,750	17,250	12,750	10,500	8,620
W 206	3/4	1 1/4	19,500	14,250	11,620	9,000	6,750
W 207	3/4	1 1/2	16,500	12,370	9,750	7,870	----
W 208	3/4	2	12,750	9,370	7,500	6,000	----
W 211	7/8	1/8	43,650	43,650	31,870	24,000	18,370
W 212	7/8	1/4	43,650	34,500	25,870	19,870	14,620
W 213	7/8	3/8	42,370	28,120	21,370	16,500	12,370
W 215	1	1/8	38,200	38,200	31,120	23,620	18,000
W 216	1	1/4	38,200	33,750	24,750	19,120	14,250
W 217	1	3/8	38,200	27,000	19,870	15,750	12,000
W 218	1	1/2	32,700	22,120	16,870	12,900	10,350
W 219	1	3/4	25,120	17,620	12,900	9,900	8,400
W 220	1	1	19,500	14,250	11,250	8,620	7,120
W 221	1	1 1/2	13,120	9,370	7,120	6,000	----
W 222	1	2	9,000	7,120	5,620	4,870	----
W 225	1 1/4	1/4	30,560	28,870	21,220	16,270	12,300
W 226	1 1/4	3/8	30,560	22,120	16,350	12,750	10,270
W 227	1 1/4	1/2	27,750	19,120	13,950	10,650	8,700

TABLE 25 GROUP W – (PLAIN WHEELS) MAXIMUM OPERATING SPEEDS (RPM) FOR 3/16” MANDRELS							
Shape No.	Wheel Diameter Inches	Wheel Thickness Inches	1/2" Overhang & Thd. Mdls	Overhang – Dimension O			
				1”	1 1/2"	2”	2 1/2"
W 228	1 1/4	3/4	20,620	14,620	11,020	8,770	7,120
W 229	1 1/4	1	16,500	12,000	8,620	6,900	5,770
W 230	1 1/4	1 1/4	13,270	9,150	6,970	5,700	----
W 231	1 1/4	1 1/2	10,270	7,270	6,000	5,100	----
W 232	1 1/4	2	7,500	6,000	4,870	4,500	----
W 235	1 1/2	1/4	25,470	24,900	18,900	15,150	11,770
W 236	1 1/2	1/2	25,470	18,750	13,870	10,500	8,620
W 237	1 1/2	1	15,750	11,250	7,870	6,370	5,620
W 238	1 1/2	1 1/2	9,900	6,970	5,470	4,870	----

TABLE 26 GROUP W – (PLAIN WHEELS) MAXIMUM OPERATING SPEEDS (RPM) FOR 1/4” MANDRELS										
Shape No.	Wheel Diameter Inches	Wheel Thickness Inches	1/2" Overhang & Thd. Mdls	Overhang – Dimension O						
				1”	1 1/2"	2”	2 1/2"	3”	4”	5”
W 176	3/8	1/2	81,000	54,379	42,000	33,000	25,500	20,400	13,260	9,550
W 177	3/8	3/4	66,000	46,500	32,250	27,370	21,000	16,800	10,920	7,860
W 178	3/8	1	55,200	40,500	30,000	23,250	17,250	13,800	8,970	6,460
W 179	3/8	1 1/4	45,750	33,750	25,720	19,720	15,300	12,240	7,960	5,730
W 182	1/2	1/8	76,390	62,400	45,750	35,400	27,250	22,020	14,310	10,300
W 183	1/2	1/4	76,390	54,750	40,500	31,120	24,000	19,200	12,480	8,990
W 184	1/2	3/8	71,250	47,620	35,020	27,000	20,850	16,680	10,840	7,800
W 185	1/2	1/2	61,500	42,000	31,500	24,000	18,370	14,700	9,560	6,880
W 186	1/2	3/4	51,000	36,370	27,750	21,220	16,120	12,900	8,390	6,040
W 187	1/2	1	40,500	30,000	24,000	18,750	14,250	11,400	7,410	5,340
W 188	1/2	1 1/2	30,370	24,000	18,900	15,000	12,000	9,600	6,240	4,490
W 189	1/2	2	24,000	18,750	15,000	12,150	9,900	7,920	5,150	3,710
W 190	5/8	1/16	61,120	61,120	48,000	31,500	29,020	23,220	15,090	10,800
W 191	5/8	1/8	61,120	60,000	44,250	34,500	27,000	21,600	14,040	10,110
W 192	5/8	1/4	61,120	51,750	38,400	29,770	23,250	18,680	12,140	8,740
W 193	5/8	3/8	61,120	45,500	33,370	25,870	20,100	16,080	10,450	7,520
W 194	5/8	1/2	56,400	39,750	29,400	22,720	17,400	13,920	9,050	6,520
W 195	5/8	3/4	46,500	32,400	24,900	19,720	15,370	12,300	8,000	5,760
W 196	5/8	1	35,250	27,000	21,300	16,870	13,120	10,500	6,830	4,920
W 197	5/8	2	21,000	16,500	12,900	10,870	8,700	6,960	4,520	3,250
W 198	5/8	2 1/2	16,500	12,900	10,870	8,700	7,000	5,600	3,640	2,620
W 201	3/4	1/4	50,930	50,930	38,100	29,020	22,500	18,000	11,700	8,420

TABLE 26 GROUP W – (PLAIN WHEELS) MAXIMUM OPERATING SPEEDS (RPM) FOR 1/4” MANDRELS										
Shape No.	Wheel Diameter Inches	Wheel Thickness Inches	1/2" Overhang & Thd. Mdls	Overhang – Dimension O						
				1”	1 1/2"	2”	2 1/2"	3”	4”	5”
W 202	3/4	3/8	50,930	44,100	32,400	25,120	19,350	15,480	10,060	7,240
W 203	3/4	1/2	50,930	36,370	27,750	21,750	16,870	13,500	8,780	6,320
W 204	3/4	3/4	42,750	30,750	23,250	18,000	14,020	11,220	7,290	5,250
W 205	3/4	1	34,500	25,870	19,500	15,000	12,000	9,600	6,240	4,490
W 206	3/4	1 1/4	28,720	21,520	17,020	13,500	10,800	8,640	5,620	4,050
W 207	3/4	1 1/2	24,000	18,520	14,620	12,000	9,900	7,920	5,150	3,710
W 208	3/4	2	18,750	15,370	12,000	9,900	8,000	6,400	4,160	3,000
W 209	3/4	2 1/2	15,000	12,150	10,500	8,400	6,800	5,440	3,540	2,550
W 211	7/8	1/8	43,650	43,650	42,900	33,000	26,250	21,000	13,650	9,820
W 212	7/8	1/4	43,650	43,650	35,100	27,600	21,370	17,100	11,120	8,010
W 213	7/8	3/8	43,650	40,870	29,400	23,400	18,370	14,700	9,560	6,880
W 215	1	1/8	38,200	38,200	38,200	33,750	25,500	20,400	13,260	9,550
W 216	1	1/4	38,200	38,200	33,750	26,250	20,250	16,200	10,530	7,580
W 217	1	3/8	38,200	38,200	28,500	22,500	17,400	13,920	9,050	6,520
W 218	1	1/2	38,200	32,770	24,900	19,500	14,850	11,880	7,720	5,560
W 219	1	3/4	35,100	24,520	18,750	15,000	12,000	9,600	6,240	4,490
W 220	1	1	25,500	19,120	15,750	12,370	10,500	8,400	5,460	3,930
W 221	1	1 1/2	19,120	14,620	12,000	10,500	8,400	6,720	4,370	3,150
W 222	1	2	15,900	12,370	9,750	8,620	6,900	5,520	3,590	2,580
W 223	1	2 1/2	12,370	9,900	8,620	6,900	5,500	4,400	2,860	2,060
W 225	1 1/4	1/4	30,560	30,560	30,560	24,000	18,750	15,000	9,750	7,020
W 226	1 1/4	3/8	30,560	30,560	26,250	20,100	15,750	12,600	8,190	5,900
W 227	1 1/4	1/2	30,560	29,620	22,650	18,000	14,100	11,280	7,330	5,280
W 228	1 1/4	3/4	30,520	22,500	17,850	14,250	11,400	9,120	5,930	4,270
W 229	1 1/4	1	24,000	18,750	15,370	12,000	9,900	7,920	5,150	3,710
W 230	1 1/4	1 1/4	20,400	15,900	12,750	10,500	8,400	6,720	4,370	3,150
W 231	1 1/4	1 1/2	17,620	13,500	10,650	9,000	7,200	5,760	3,740	2,690
W 232	1 1/4	2	14,250	10,650	9,000	7,500	6,000	4,800	3,120	2,250
W 235	1 1/2	1/4	25,470	25,470	25,470	22,720	17,620	14,100	9,170	6,600
W 236	1 1/2	1/2	25,470	25,470	21,750	17,250	13,650	10,920	7,100	5,110
W 237	1 1/2	1	22,500	17,620	13,270	10,870	9,520	7,620	4,950	3,560
W 238	1 1/2	1 1/2	15,600	12,000	9,750	8,250	6,600	5,280	3,430	2,470
W 239	1 1/2	2	12,750	9,900	8,000	6,400	5,100	4,080	2,650	1,910
W 240	1 1/2	2 1/2	10,500	8,400	6,800	5,500	4,400	3,520	2,290	1,650
W 241	1 1/2	3	9,000	7,250	6,000	4,800	3,900	3,120	2,030	1,460
W 242	2	1	19,100	15,950	11,750	10,000	8,800	7,040	4,580	3,300
W 243	2	1 1/2	14,500	12,750	9,800	7,800	6,300	5,040	3,280	2,360
W 244	2	2	11,750	10,500	7,500	6,200	5,030	4,000	2,600	1,870
W 245	2	2 1/2	9,600	7,250	6,400	5,300	4,250	3,400	2,210	1,590
W 246	2	3	8,250	6,750	5,600	4,600	3,700	2,960	1,920	1,380

TABLE 27 GROUP W – (PLAIN WHEELS) MAXIMUM OPERATING SPEEDS (RPM) FOR 3/8” MANDRELS										
Shape No.	Wheel Diameter Inches	Wheel Thickness Inches	1/2" Overhang & Thd. Mdls	Overhang – Dimension O						
				1”	1 1/2"	2”	2 1/2"	3”	4”	5”
W 185	1/2	1/2	76,390	76,390	63,000	48,000	36,740	29,400	19,120	13,760
W 186	1/2	3/4	76,390	72,740	55,500	42,440	32,240	25,800	16,780	12,080
W 187	1/2	1	76,390	60,000	48,000	37,500	28,500	22,800	14,820	10,680
W 188	1/2	1 1/2	60,740	48,000	37,800	30,000	24,000	19,200	12,480	8.980
W 189	1/2	2	48,000	37,500	30,000	24,300	19,800	15,840	10,300	7,420
W 194	5/8	1/2	61,120	61,120	58,880	45,440	34,800	27,840	18,100	13,040
W 195	5/8	3/4	61,120	61,120	49,800	39,440	30,740	24,600	16,000	11,520
W 196	5/8	1	61,120	54,000	42,600	33,740	26,240	21,000	13,660	9,840
W 197	5/8	2	42,000	33,000	25,800	21,740	17,400	13,970	9,040	6,500
W 198	5/8	2 1/2	33,000	25,800	21,740	17,400	14,000	11,200	7,280	5,240
W 203	3/4	1/2	50,930	50,930	50,930	43,500	33,740	27,000	17,560	12,640
W 204	3/4	3/4	50,930	50,930	46,500	36,000	28,040	22,440	14,580	10,500
W 205	3/4	1	50,930	50,930	39,000	30,000	24,000	19,200	12,480	8,980
W 206	3/4	1 1/4	50,930	43,040	34,040	27,000	21,600	17,280	11,240	8,100
W 207	3/4	1 1/2	48,000	37,040	29,240	24,000	19,800	15,840	10,300	7,420
W 208	3/4	2	37,500	30,740	24,000	19,800	16,000	12,800	8,320	6,000
W 209	3/4	2 1/2	30,000	24,300	21,000	16,800	13,600	10,880	7,080	5,100
W 218	1	1/2	38,200	38,200	38,200	38,200	29,700	23,760	15,440	11,120
W 219	1	3/4	38,200	38,200	37,500	30,000	24,000	19,200	12,480	8,980
W 220	1	1	38,200	38,200	31,500	24,740	21,000	16,800	10,920	7,860
W 221	1	1 1/2	38,200	29,240	24,000	21,000	16,800	13,440	8,740	6,300
W 222	1	2	31,800	24,740	19,500	17,240	13,800	11,040	7,180	5,160
W 223	1	2 1/2	24,740	19,800	17,240	13,800	11,000	8,800	5,720	4,120
W 227	1 1/4	1/2	30,560	30,560	30,560	30,560	28,200	22,560	14,660	10,560
W 228	1 1/4	3/4	30,560	30,560	30,560	28,500	22,800	18,240	11,860	8,540
W 229	1 1/4	1	30,560	30,560	30,560	24,000	19,800	15,840	10,300	7,420
W 230	1 1/4	1 1/4	30,560	30,560	25,500	21,000	16,800	13,440	8,740	6,300
W 231	1 1/4	1 1/2	30,560	27,000	21,300	18,000	14,400	11,520	7,480	5,380
W 232	1 1/4	2	28,500	21,300	18,000	15,000	12,000	9,600	6,240	4,500
W 236	1 1/2	1/2	25,470	25,470	25,470	25,470	25,470	21,840	14,200	10,220
W 237	1 1/2	1	25,470	25,470	25,470	21,470	19,040	15,240	9,900	7,120
W 238	1 1/2	1 1/2	25,470	24,000	19,500	16,500	13,200	10,560	6,860	4,940
W 239	1 1/2	2	25,470	19,800	16,000	12,800	10,200	8,160	5,300	3,820
W 240	1 1/2	2 1/2	21,000	16,800	13,600	11,000	8,800	7,040	4,580	3,300
W 241	1 1/2	3	18,000	14,500	12,000	9,600	7,800	6,240	4,060	2,920
W 242	2	1	19,100	19,100	19,100	19,100	17,600	14,080	9,160	6,600
W 243	2	1 1/2	19,100	19,100	19,100	15,600	12,600	10,080	6,560	4,720
W 244	2	2	19,100	19,100	15,000	12,400	10,000	8,000	5,200	3,740
W 245	2	2 1/2	19,100	14,500	12,800	10,600	8,500	6,800	4,420	3,180
W 246	2	3	16,500	13,500	11,200	9,200	7,400	5,920	3,840	2,760

TABLE 28 GROUP B – (SHAPED WHEELS) MAXIMUM OPERATING SPEEDS (RPM) FOR 3/32” MANDRELS							
Shape No.	Wheel Diameter Inches	Wheel Thickness Inches	1/2" Overhang & Thd. Mdls.	Overhang – Dimension O			
				1”	1 1/2"	2”	2 1/2"
B 43	1/4	5/16	67,500	41,250	27,000	18,750	12,750
B 44	7/32	3/8	57,000	34,500	22,500	16,500	11,250
B 45	3/16	5/16	86,250	50,250	35,250	24,000	15,000
B 46	1/8	5/16	87,000	52,500	36,750	24,750	16,500
B 47	1/8	5/32	87,000	52,500	36,750	24,750	16,500
B 53	1/4	5/8	49,500	30,750	20,250	14,250	10,500
B 55	1/8	1/4	87,000	52,500	36,750	24,750	16,500
B 63	1/4	3/16	76,500	46,500	30,750	21,750	14,250
B 64	1/4	1/16	87,000	52,500	36,750	24,750	16,500
B 65	1/8	1/8	87,000	52,500	36,750	24,750	16,500
B 70	3/4	1/8	50,930	33,750	21,750	15,750	11,250
B 71	5/8	1/8	61,120	39,000	24,750	17,250	12,750
B 72	1/2	1/8	60,750	35,250	23,250	16,500	12,000
B 73	1/2	1/8	60,750	35,250	23,250	16,500	12,000
B 74	7/32	3/32	87,000	52,500	36,750	24,750	16,500
B 81	3/4	3/16	50,930	33,750	21,750	15,750	11,250
B 82	1/2	1/4	67,500	41,250	27,000	18,750	12,750
B 83	3/8	3/16	72,750	43,500	27,750	19,500	12,750
B 84	5/16	3/16	87,000	52,500	36,750	24,750	16,500
B 92	1/4	1/4	67,500	41,250	27,000	18,750	12,750
B 93	3/16	3/16	87,000	52,500	36,750	24,750	16,500
B 94	11/64	3/32	87,000	52,500	36,750	24,750	16,500
B 95	1/8	3/16	87,000	52,500	36,750	24,750	16,500
B 96	1/8	1/4	87,000	52,500	36,750	24,750	16,500
B 97	1/8	3/8	87,000	52,500	36,750	24,750	16,500
B 98	3/32	1/4	87,000	52,500	36,750	24,750	16,500
B 104	5/16	3/8	57,000	34,500	22,500	16,500	11,250
B 105	1/4	1/4	86,250	50,250	35,250	24,000	15,000
B 106	1/8	7/64	87,000	52,500	36,750	24,750	16,500
B 112	3/8	1/2	37,500	23,250	16,500	12,750	9,000
B 113	1/4	1/4	67,500	41,250	27,000	18,750	12,750
B 114	7/32	3/8	57,000	34,500	22,500	16,500	11,250
B 115	3/32	1/8	87,000	52,500	36,750	24,750	16,500
B 122	3/8	3/8	51,000	30,750	21,000	15,000	10,500
B 123	3/16	3/16	86,250	50,250	35,250	24,000	15,000
B 124	1/8	1/8	87,000	52,500	36,750	24,750	16,500

TABLE 29 GROUP B – (SHAPED WHEELS) MAXIMUM OPERATING SPEEDS (RPM) FOR 1/8” MANDRELS							
Shape No.	Wheel Diameter Inches	Wheel Thickness Inches	1/2" Overhang & Thd. Mdls.	Overhang – Dimension O			
				1”	1 1/2"	2”	2 1/2"
B 41	5/8	5/8	33,750	23,250	17,620	13,650	10,350
B 42	½	3/4	33,750	23,250	17,620	13,650	10,350
B 43	¼	5/16	81,370	51,000	34,120	24,000	16,870
B 44	7/32	3/8	68,400	42,370	28,870	20,850	15,000
B 45	3/16	5/16	104,250	61,870	44,620	30,900	20,250
B 46	1/8	5/16	105,000	64,500	46,650	32,400	21,370
B 47	1/8	5/32	105,000	64,500	46,650	32,400	21,370
B 51	7/16	3/4	45,370	28,500	21,000	15,900	12,150
B 52	3/8	3/4	43,370	28,500	21,000	15,900	12,150
B 53	¼	5/8	60,000	38,020	26,250	18,750	13,870
B 54	¼	1/2	60,000	38,020	26,250	18,750	13,870
B 55	1/8	1/4	105,000	64,500	46,550	32,400	21,370
B 61	3/4	5/16	38,250	24,370	17,400	13,270	9,970
B 62	1/2	3/8	41,020	26,400	19,500	15,000	11,400
B 63	1/4	3/16	92,400	57,370	39,370	27,900	18,900
B 64	1/4	1/16	105,000	64,500	46,650	32,400	21,370
B 65	1/8	1/8	105,000	64,500	46,650	32,400	21,370
B 70	3/4	1/8	50,930	41,250	27,750	20,400	15,000
B 71	5/8	1/8	61,120	48,000	31,500	22,650	16,870
B 72	1/2	1/8	73,500	43,650	29,100	20,770	15,450
B 73	1/2	1/8	73,500	43,650	29,100	20,700	15,450
B 74	7/32	3/32	105,000	64,500	46,650	32,400	21,370
B 81	3/4	3/16	50,930	41,250	27,750	20,400	15,000
B 82	1/2	1/4	76,390	51,000	34,120	24,000	16,870
B 83	3/8	3/16	87,600	53,250	35,250	24,750	17,250
B 84	5/16	3/16	105,000	64,500	46,650	32,400	21,370
B 91	1/2	5/8	34,500	22,500	16,870	13,120	9,900
B 92	1/4	1/4	81,370	51,000	34,120	24,000	16,870
B 93	3/16	3/16	105,000	64,500	46,650	32,400	21,370
B 94	11/64	3/32	105,000	64,500	46,650	32,400	21,370
B 95	1/8	3/16	105,000	64,500	46,650	32,400	21,370
B 96	1/8	1/4	105,000	64,500	46,650	32,400	21,370
B 97	1/8	3/8	105,000	64,500	46,650	32,400	21,370
B 98	3/32	1/4	105,000	64,500	46,650	32,400	21,370
B 101	5/8	11/16	33,750	23,250	17,620	13,650	10,350
B 102	5/8	1/2	45,370	28,500	21,000	15,900	12,150
B 103	5/8	3/16	61,120	41,250	27,750	20,400	15,000
B 104	5/16	3/8	68,400	42,370	28,870	20,850	15,000
B 105	1/4	1/4	104,250	61,870	44,620	30,900	20,250
B 106	1/8	7/64	105,000	64,500	46,650	32,400	21,370
B 111	7/16	11/16	33,750	23,250	17,620	13,650	10,350

TABLE 29 GROUP B – (SHAPED WHEELS) MAXIMUM OPERATING SPEEDS (RPM) FOR 1/8” MANDRELS							
Shape No.	Wheel Diameter Inches	Wheel Thickness Inches	1/2" Overhang & Thd. Mdls.	Overhang – Dimension O			
				1”	1 1/2"	2”	2 1/2"
B 112	3/8	1/2	45,370	28,500	21,000	15,900	12,150
B 113	1/4	1/4	81,370	51,000	34,120	24,000	16,870
B 114	7/32	3/8	68,400	42,370	28,870	20,850	15,000
B 115	3/32	1/8	105,000	64,500	46,650	32,400	21,370
B 121	1/2	1/2	45,370	28,500	21,000	15,900	12,150
B 122	3/8	3/8	61,650	37,720	27,000	19,870	14,250
B 123	3/16	3/16	104,250	61,820	44,620	30,900	20,250
B 124	1/8	1/8	105,000	64,500	46,650	32,400	21,370
B 131	1/2	1/2	34,500	22,500	16,870	13,120	9,900
B 132	3/8	1/2	45,370	28,500	21,000	15,900	12,150
B 133	3/8	3/8	54,000	33,000	24,150	18,000	13,500
B 134	5/16	3/8	61,650	37,720	27,000	19,870	14,250
B 135	1/4	1/2	60,000	38,020	26,250	18,750	13,870
B 136	1/4	5/16	77,250	45,920	30,900	22,500	16,120

TABLE 30 GROUP B – (SHAPED WHEELS) MAXIMUM OPERATING SPEEDS (RPM) FOR 1/4" MANDRELS							
Shape No.	Wheel Diameter Inches	Wheel Thickness Inches	1/2" Overhang & Thd. Mdls.	Overhang – Dimension O			
				1”	1 1/2"	2”	2 1/2"
B 41	5/8	5/8	61,120	46,500	35,250	27,370	21,000
B 42	1/2	3/4	61,120	46,500	35,250	27,370	21,000
B 51	7/16	3/4	81,000	54,370	42,000	33,000	25,500
B 52	3/8	3/4	81,000	54,370	42,000	33,000	25,500
B 61	3/4	5/16	50,930	50,930	38,100	29,020	22,500
B 62	1/2	3/8	71,250	47,620	35,020	27,000	20,850
B 71	5/8	1/8	61,120	61,120	48,000	37,500	29,020
B 72	1/2	1/8	76,390	62,400	45,750	35,400	27,520
B 73	1/2	1/8	76,390	62,400	45,750	35,400	27,520
B 91	1/2	5/8	61,500	42,000	31,500	24,000	18,370
B 101	5/8	11/16	61,120	46,500	35,250	27,370	21,000
B 102	5/8	1/2	61,120	54,370	42,000	33,000	25,500
B 111	7/16	11/16	66,000	46,500	35,250	27,370	21,000
B 112	3/8	1/2	81,000	54,370	42,000	33,000	25,500
B 121	1/2	1/2	76,390	54,370	42,000	33,000	25,500
B 131	1/2	1/2	61,500	42,000	31,500	24,000	18,370
B 132	3/8	1/2	81,000	54,370	42,000	33,000	25,500

TABLE 31 GROUP A – (SHAPED WHEELS) MAXIMUM OPERATING SPEEDS (RPM) FOR 1/4" MANDRELS								
Shape No.	**Wheel Diameter Inches**	**Wheel Thickness Inches**	**1/2" Overhang & Thd. Mdls.**	**Overhang – Dimension O**				
				1”	**1 1/2"**	**2”**	**2 1/2"**	**3”**
A 1	3/4	2 1/2	19,800	16,500	13,120	10,650	9,000	6,750
A 2	1	1 1/4	38,200	32,620	25,500	20,620	16,870	13,500
A 3	1	2 3/4	16,100	13,080	10,730	8,720	6,710	4,700
A 4	1 1/4	1 1/4	30,560	24,750	20,250	16,120	13,120	10,500
A 5	3/4	1 1/8	45,000	33,750	27,000	21,000	16,500	13,500
A 6	3/4	1 1/8	39,000	29,700	24,000	18,970	15,000	12,000
A 11	7/8	2	19,860	15,100	12,000	9,810	8,220	7,020
A 12	11/16	1 1/4	48,000	35,250	27,370	21,750	17,250	13,500
A 13	1 1/8	1 1/8	33,950	32,250	25,500	20,620	16,500	12,750
A 14	11/16	7/8	55,560	40,500	30,750	24,370	19,500	15,000
A 15	1/4	1 1/16	72,750	47,620	34,500	26,250	19,870	13,870
A 21	1	1	34,500	26,250	21,000	17,250	13,870	10,870
A 22	3/4	5/8	50,930	40,500	30,750	24,370	19,500	15,000
A 23	3/4	1	39,370	30,370	24,370	19,500	15,000	12,000
A 24	1/4	3/4	76,500	49,500	36,370	27,000	20,250	15,370
A 25	1	1	35,620	27,370	22,120	18,000	14,250	11,250
A 26	5/8	5/8	61,120	46,500	35,250	27,750	21,370	15,750
A 31	1 3/8	1	27,780	26,250	21,000	17,250	13,500	10,870
A 32	1	5/8	38,200	38,200	30,000	24,000	18,900	15,000
A 33	1	1/2	38,200	38,200	30,000	24,000	18,900	15,000
A 34	1 1/2	3/8	25,470	25,470	25,470	21,970	18,000	13,870
A 35	1	3/8	38,200	38,200	31,500	25,500	20,250	15,900
A 36	1 5/8	3/8	23,520	23,520	23,520	21,750	17,620	13,870
A 37	1 1/4	1/4	30,560	30,560	30,560	28,100	22,500	18,000
A 38	1	1	34,500	26,250	21,000	17,020	13,500	10,650
A 39	3/4	3/4	47,250	35,250	27,750	22,120	17,250	13,120

LICENSING AND REGULATORY AFFAIRS
CUSTOMER DRIVEN. BUSINESS MINDED.

Michigan Occupational Safety and Health Administration
PO Box 30643, Lansing, Michigan 48909-8143
Ph: 517-284-7740

The Department of Licensing and Regulatory Affairs will not discriminate against any individual or group because of race, sex, religion, age, national origin, color, marital status, disability, or political beliefs. Auxiliary aids, services and other reasonable accommodations are available upon request to individuals with disabilities.