For further information
Ph: 517-284-7740
www.michigan.gov/mioshastandards

DEPARTMENT OF LICENSING AND REGULATORY AFFAIRS

DIRECTOR'S OFFICE

GENERAL INDUSTRY SAFETY STANDARDS

Filed with the Secretary of State on December 28, 1970 (as amended October 25, 1972)
(as amended November 1, 1974) (as amended October 28, 1976) (as amended April 2, 1979)
(as amended November 7, 1980) (as amended March 2, 1983) (as amended April 11, 2000)
(as amended May 29, 2013) **(as amended August 10, 2016)**

These rules become effective immediately upon filing with the Secretary of State
unless adopted under section 33, 44, or 45a(6) of 1969 PA 306.

Rules adopted under these sections become effective 7 days after filing with the Secretary of State.

(By authority conferred on the director of the department of licensing and regulatory affairs
by sections 16 and 21 of 1974 PA 154, MCL 408.1016 and 408.1021, and Executive Reorganization Order Nos.
1996-2, 2003-1, 2008-4, and 2011-4, MCL 445.2001, 445.2011, 445.2025, and 445.2030)

R 408.12101, R 408.12103, R 408.12106, R 408.12107, R 408.12108, R 408.12109, R 408.12110, R 408.12111,
R 408.12132, R 408.12136, R 408.12137, R 408.12139, R 408.12143, R 408.12152, R 408.12153, R 408.12154,
R 408.12155, R 408.12163, R 408.12164, R 408.12165, R 408.12171, and R 408.12176 of the
Michigan Administrative Code are amended, R 408.12102 is rescinded, as follows:

PART 21. POWERED INDUSTRIAL TRUCKS

Table of Contents:

R 408.12101 Scope. 2
R 408.12103 Definitions; A to C. 2
R 408.12105 Definitions; D to F. 2
R 408.12106 Definitions; H to I. 2
R 408.12107 Definitions; L. 3
R 408.12108 Definitions; M, N. 3
R 408.12109 Definitions; O, P. 3
R 408.12110 Definitions; R to U. 3
R 408.12111 Adopted and referenced standards. 4
NAMEPLATES AND MARKINGS 4
R 408.12122 Approved labels. 4
EQUIPMENT 4
R 408.12131 Warning devices and lights. 4
R 408.12132 Modifications. 5
R 408.12134 Parking brakes; tires. 5
R 408.12136 Operator platforms. 5
R 408.12137 Steering control. 5
R 408.12138 Load handling controls, general. 5
R 408.12139 Load handling controls; direction of motion and guards. 6
R 408.12143 Overhead guard on high-lift truck. 7
EMPLOYER RESPONSIBILITIES 8
R 408.12151 Operator selection. 8
R 408.12152 Training. 8
R 408.12153 Testing. 8
R 408.12154 Permits. 9
R 408.12155 Restriction of use. 10
R 408.12161 Mechanical condition and maintenance. 10
R 408.12162 Blocks and safety stands for maintenance. 10
R 408.12163 Fuel. 10
R 408.12164 Electric trucks. 11
R 408.12165 Dockboards and plates. 11
R 408.12166 Order picker trucks; high-lift platforms. 11
R 408.12167 Fork lift truck platforms. 12
R 408.12168 Load backrest extensions. 12
R 408.12169 Spinner knobs. 12
EMPLOYEE RESPONSIBILITIES 12
R 408.12171 Daily checks. 12
R 408.12172 General operating rules. 12
R 408.12173 Position of arms and legs. 12
R 408.12174 Parking. 12
R 408.12175 Towing and pushing. 12
R 408.12176 Loading trucks, trailers, and railcars. 13
R 408.12177 Surveying path of travel. 13
R 408.12178 Operations in hazardous areas. 13
R 408.12179 Reporting accidents. 13
R 408.12180 Clear access. 13
R 408.12181 Making repairs. 13
R 408.12182 Flammables. 13
MOVING TRUCKS 13
R 408.12183 Operation. 13
R 408.12184 Slow down at crossings and obstructions. 13
R 408.12185 Clear view. 13
R 408.12186 Ascending and descending grades. 13
R 408.12187 Traveling. 13

R 408.12188 Starts, stops, and turns. 13
R 408.12189 Horseplay. 13
R 408.12190 Wet floors, dockboards, and bridgeplates. 14
R 408.12191 Entering elevators. 14
R 408.12192 Running over loose objects. 14
LOADING SAFETY 14
R 408.12193 Operators; loading. 14
APPENDIX A - Types of Trucks.....15
APPENDIX B - Fork Truck Pre-Operation Inspection Checklist.....21
APPENDIX C - Stability of Powered Industrial Trucks 22

R 408.12101 Scope.
Rule 2101. The purpose of these rules is to provide, in or about places of employment, minimum safety rules for the care and use of powered industrial trucks and to provide for operator safety and specifications of equipment.

R 408.12102 Rescinded.

R 408.12103 Definitions; A to C.
Rule 2103. (1) "Attachment" means a device, other than conventional forks or load backrest extension, mounted permanently or removed on the elevating mechanism of a truck for handling the load. Popular attachments are fork extensions, clamps, rotating devices, side shifters, load stabilizers, rams, and booms.

(2) "Cantilever truck" means a self-loading counter-balanced or non-counterbalanced truck equipped with cantilever load engaging means. (Appendix A. Figure 1)

(3) "Capacity" when referring to trucks, means the following:

(a) The capacity of a truck equipped with a load carriage and forks, or with attachments, is the maximum weight in pounds, at a specified load center which the truck, based on the strength of its various components and applicable stability, can lift to the maximum elevation of the load engaging means. Alternate capacities may be established at the same specified load center and at less than maximum elevation of the load engaging means.

(b) The capacity of a truck equipped with a platform is the maximum weight in pounds, at a specified load center which the truck, based on the strength of its various components, can lift to the maximum elevation of the load engaging means.

(4) "Carriage" means a support structure for forks or attachment, generally roller mounted, traveling vertically within the mast of a cantilever truck.

(5) "Center-control truck" means a truck in which the operator's control position is located near the longitudinal center of the truck.

(6) "Counterbalanced truck" means a truck equipped with load engaging means wherein all the load during normal transporting is external to the polygon formed by the wheel contacts. (Appendix A, Figure 1.)

R 408.12105 Definitions; D to F.
Rule 2105. (1) "Drift" means to move without control.

(2) "Electric truck" means a truck in which the principal energy is transmitted to motors in the form of electricity from a power source such as, but not limited to, a battery or motor generator.

(3) "End-control truck" means a truck in which the operator's position is located at the end opposite the load.

(4) "Fixed platform truck" means a truck equipped with a load platform which is non-elevating.

(5) "Forks" means horizontal tine-like projections, normally suspended from the carriage, for engaging and supporting loads.

(6) "Fork height" means the vertical distance from the floor to the load carrying surface adjacent to the heel of the forks with mast vertical, and in the case of a reach truck, with the forks extended.

(7) "Fork-lift truck" means a light-lift self-loading truck equipped with load carriage and forks for transporting and tiering loads.

(8) "Free play" means an uncontrolled movement.

R 408.12106 Definitions; H to I.
Rule 2106. (1) "High-lift truck" means a self-loading truck equipped with an elevating mechanism designed to permit tiering. Popular types are high-lift fork trucks, high-lift ram trucks, high-lift boom trucks, high-lift clamp trucks, and high-lift platform trucks. (Appendix A, Figure 1.)

(2) "High-lift platform truck" means a self-loading truck equipped with a load platform, intended primarily for transporting and tiering loaded skid platforms. (Appendix A, Figure 2.)

(3) "Industrial crane truck" means a truck intended primarily for pick and carry use in warehousing, yarding, or industrial plant operation over improved or hard surfaced roads and yards, including maintenance within these areas.

(4) "Industrial tractor" means a truck designed primarily to draw 1 or more non-powered trucks, trailers, or other mobile loads. (Appendix A, Figure 5.)

(5) "Internal combustion engine truck" means a truck in which the power source is a gas, LP gas, gasoline, or diesel type engine.

(6) "Issuing authority" means an employer or his or her designated representative who instructed and trained the operator.

R 408.12107 Definitions; L.

Rule 2107. (1) "Liquefied petroleum gas (LP gas)" means a fuel that is composed predominantly of any of the following hydrocarbons, or mixtures of them: propane, propylene, butanes (normal butane or iso-butane), and butylenes.

(2) "Load-axle" means the truck axle nearest the load.

(3) "Load backrest extension" means a device extending vertically from the fork carriage frame.

(4) "Load center" means the horizontal longitudinal distance from the intersection of the horizontal load-carrying surfaces and vertical load-engaging faces of the forks, or equivalent load positioning structure, to the center of gravity of the load.

(5) "Load engaging means" means a load handling device attached to a powered industrial truck for the purpose of handling a load.

(6) "Low-lift truck" means a self-loading truck equipped with an elevating mechanism designed to raise the load sufficiently to permit horizontal movement. Popular types are low-lift platform trucks and pallet trucks. (Appendix A, Figure 3).

(7) "Low-lift platform truck" means a self-loading truck equipped with a load platform intended primarily for transporting loaded skid platforms. (Appendix A, Figure 3).

R 408.12108 Definitions; M, N.

Rule 2108. (1) "Mast" means a support member providing the guideways permitting vertical movement of the carriage. It is usually constructed in the form of channels or similar sections providing the supporting pathway for the carriage rollers.

(2) "Motorized hand truck" means a truck designed to be controlled by a walking operator and used to lift, tow, carry, stock, and tier materials. (Appendix A, Figure 4).

(3) "Motorized hand or rider truck" means a dual purpose truck designed to be controlled by a walking operator or by a riding operator. (Appendix A, Figure 6).

(4) "Narrow aisle truck" means a self-loading truck primarily intended for right angle stacking in aisles narrower than those normally required by counterbalanced trucks of the same capacity. (Appendix A, Figure 10).

(5) "Non-elevating truck" means a non-counterbalanced truck designed primarily for burden-carrying and not capable of self-loading.

R 408.12109 Definitions; O, P.

Rule 2109. (1) "Operator" means an employee who has been trained, tested, and authorized by the present employer to operate a powered industrial truck.

(2) "Order picker truck, high-lift" means a high-lift truck controlled by the operator stationed on a platform movable with the load engaging means and intended for manual stock selection. The truck may be capable of self-loading or tiering or both. (Appendix A, Figure 9).

(3) "Overhead guard" means a framework fitted to a truck over the head of a riding operator.

(4) "Overall lowered mast height" means the maximum vertical dimension from the ground or floor to the extreme top point of the mast with the fork carriage in the fully lowered position and unloaded.

(5) "Pallet truck" means a self-loading low-lift truck equipped with wheeled forks of dimensions to go under a single faced pallet or between the top and bottom boards of a double faced pallet and having wheels capable of lowering into spaces between the bottom boards so as to raise the pallet off the floor for transportation. (Appendix A, Figure 4).

(6) "Parking brake" means a device to prevent the movement of a stationary truck.

(7) "Powered industrial truck" or "truck" means a mobile, power driven vehicle used to carry, push, pull, lift, stack, or tier material.

R 408.12110 Definitions; R to U.

Rule 2110. (1) "Reach truck" means a self-loading truck, generally high-lift, having load engaging means mounted so the means can be extended forwardly under control to permit a load to be picked up and deposited in the extended position and transported in the retracted position. (Appendix A, Figure 7.)

(2) "Rough terrain forklift truck" means a wheeled-type truck which is designed primarily as a fork truck that has a vertical mast or pivoted boom, or both, which has variable fixed length reach and which may be equipped with attachments and that is intended for operation on unimproved natural terrain as well as the disturbed terrain of construction sites. A machine that is designed primarily for earth-moving, such as a loader or dozer, even though its buckets and blades are replaced with forks or a machine that is designed primarily as an over-the-road truck that has a lifting device, is not a rough terrain forklift truck.

(3) "Self-loading" means the capability of a truck to pick up, carry, set down and, in the case of high-lift types to stack or tier its load without the aid of external means.

(4) "Service brake" means a device designed to bring a moving truck to a halt.

(5) "Side loader" means a self-loading truck, generally high-lift, having load engaging means mounted in such a manner that the means can be extended laterally under control to permit a load to be picked up and deposited in the extended position and transported in the retracted position. (Appendix A, Figure 8.)

(6) "Straddle truck" means a general class of cantilever truck with horizontal structural wheel supported members extending forward from the main body of the truck, generally high-lift, for picking up and hauling loads between its outrigger arms. (Appendix A, Figure 10.)

(7) "Tire" means a tire which may be standard solid, cushion solid, pneumatic or solid pneumatic style.

(8) "Tiering" means a process of placing a load on or above another load.

(9) "Unattended truck" means a truck which is beyond the vision or more than 25 feet from the operator, whichever is less.

R 408.12111 Adopted and referenced standards.

Rule 2111. (1) The following standards are adopted by reference in these rules and are available from IHS Global, 15 Inverness Way East, Englewood, Colorado, 80112, USA, telephone number: 1-800-854-7179 or via the internet at website: http://global.ihs.com; at a cost as of the time of adoption of these rules, as stated in these rules.

(2) A powered industrial truck manufactured after January 15, 1971, but before 1993, shall be certified by the manufacturer that the truck covered by this part has been produced according to the mandatory requirements of sections 3 and 4, except subsection 421 of section 4, of the American National Standards Institute Standard ANSI standard B56.1 "Safety Standards For Powered Industrial Trucks," 1969 edition. Cost: $60.00.

(3) A low lift or high lift truck manufactured after April 26, 2000 shall be in compliance with the requirements of ANSI standard B56.1 "Safety Standard for Low Lift and High Lift Trucks," 1993 edition, except as noted in subrule (1) of this rule. Cost: $61.00.

(4) A rough terrain fork lift truck manufactured after April 26, 2000 shall be in compliance with the requirements of ANSI standard B56.1 "Rough Terrain Fork Lift Trucks," 1993 edition. Cost: $68.00.

(5) A industrial crane truck manufactured after April 26, 2000 shall be in compliance with ANSI standard B56.7 "Safety Standard for Industrial Crane Trucks," 1987 edition. Cost: $60.00.

(6) A tow tractor manufactured after April 26, 2000 shall be in compliance with ANSI standard B56.92 "Operator Controlled Industrial Tow Tractors," 1992 edition. Cost: $56.00.

(7) A manually propelled high lift industrial truck manufactured after April 26, 2000 shall be in compliance with ANSI standard B56.10 "Manually Propelled High Lift Industrial Trucks," 1992 edition. Cost: $105.00.

(8) National Fire Protection Agency Standard NFPA 505 "Fire Safety Standard for Powered Industrial Trucks Including Type Designations, Areas of Use, Conversions, Maintenance, and Operations," 1996 edition. Cost: $27.00.

(9) The standards adopted in these rules are available for inspection at the Department of Licensing and Regulatory Affairs, MIOSHA Regulatory Services Section, 530 West Allegan Street, Lansing, Michigan, 48909-8143.

(10) The standards adopted in these rules may be obtained from the publisher or may be obtained from the Department of Licensing and Regulatory Affairs, MIOSHA Regulatory Services Section, 530 West Allegan Street, P.O. Box 30643, Lansing, Michigan, 48909-8143, plus $20.00 for shipping and handling.

(11) The following Michigan occupational safety and health standards (MIOSHA) are referenced in these rules. Up to 5 copies of these standards may be obtained at no charge from the Michigan Department of Licensing and Regulatory Affairs, MIOSHA Regulatory Services Section, 530 West Allegan Street, P. O. Box 30643, Lansing, Michigan, 48909-8143 or via the internet at website: www.michigan.gov/mioshastandards. For quantities greater than 5, the cost, at the time of adoption of these rules, is 4 cents per page.

(a) General Industry Safety Standard Part 1 "General Provisions," R 408.10001 to R 408.10098.

(b) General Industry Safety Standard Part 33 "Personal Protective Equipment" R 408.13301 to R 408.13398.

(c) General Industry Safety Standard Part 56 "Storage and Handling of Liquefied Petroleum Gases," R 408.15601 to R 408.15601

(d) General Industry Safety Standard Part 75 "Flammable Liquids," R 408.17501 to R 408.17502.

(e) General Industry Safety Standard Part 92 "Hazard Communication," R 408.19201 to R 408.19204.

(f) Occupational Health Standard Part 433 "Personal Protective Equipment," R 325.60001 to R 325.60013.

(g) Occupational Health Standard Part 472 "Medical Services and First Aid," R 325.47201 to R 325.47201.

NAMEPLATES AND MARKINGS

R 408.12122 Approved labels.

Rule 2122. (1) A powered industrial truck which has been accepted by an approved testing laboratory shall bear a label or marking indicating such acceptance.

(2) A nameplate, label or tag provided on such a truck shall be maintained in place and in legible condition.

EQUIPMENT

R 408.12131 Warning devices and lights.

Rule 2131. (1) A truck, except a motorized hand truck, shall be equipped with an audible device to warn of approach.

(2) A truck used in areas where general lighting is less than 2 footcandles shall be equipped with auxiliary lights that illuminate work in process.

R 408.12132 Modifications.

Rule 2132. (1) An employer shall not install an additional counterweight without written assurance from the manufacturer of the truck that the truck will meet the stability requirements of ANSI standard B56.1 “Safety Standard for Low Lift and High Lift Trucks" 1993 edition, as adopted in R 408.12111.

(2) An employer shall not make other modifications affecting capacity or safety without written approval of the manufacturer or an engineer knowledgeable on the subject. Capacity, operation, and maintenance instruction plates, tags, or decals shall be changed accordingly.

(3) If the truck is equipped with front end attachments, the name plate shall be marked to show all of the following:

(a) Identification of the attachments.

(b) The approximate weight of the truck and attachment.

(c) The load capacity of the truck and attachment combination at maximum elevation of the load engaging means with load laterally centered.

R 408.12134 Parking brakes; tires.

Rule 2134. (1) The parking brake on a sit-down rider truck shall be capable of holding the truck on the maximum grade which the truck can negotiate with rated load, or on a 15% grade, whichever is lesser. The parking brake shall be manually or automatically applied and shall remain applied until released by the operator.

(2) Tires shall be used as recommended by the truck manufacturer.

R 408.12136 Operator platforms.

Rule 2136. (1) An end control, reach, narrow aisle, order picker high-lift, order picking and stacking, and motorized hand rider truck shall be equipped with a platform extended beyond the operator's position, and shall withstand a compression load equal to the weight of the loaded vehicle applied along the longitudinal axis of the truck with the outermost projection of the platform against a flat vertical surface. The back protective guard where provided shall permit rapid and unobstructed ingress or egress from the platform.

(2) On a double end control baggage type truck or a truck that may be transported on short elevators, means shall be provided to prevent accidental folding of the operator's folding platform.

(3) All of the following apply to an order picker truck, high-lift:

(a) A removable operator platform shall be provided with a device that attaches the platform to the lifting means.

(b) The operator platform shall be equipped with side guard rails.

(c) When the platform is elevated, the horizontal travel speed of the truck shall be automatically reduced to a degree necessary to maintain stability under maximum braking load and turning.

(d) Subdivisions (a) and (c) of this subrule pertain only to a truck manufactured after the effective date of January 15, 1971.

R 408.12137 Steering control.

Rule 2137. (1) An employer shall assure that, except on a motorized hand and motorized hand or rider truck, the steering control of a powered industrial truck is contained within the outlines of the planes of the truck, or guarded to prevent injury to the operator during movement of the controls when passing an obstacle such as a wall, post, equipment, box, or other truck.

(2) An employer shall assure that on a motorized hand and motorized hand or rider truck, the steering handle is provided with a guard or device to protect the operator's hands from injury when passing an obstacle such as a wall, post, equipment, box, or another truck.

R 408.12138 Load handling controls, general.

Rule 2138. All of the following apply to a load handling control on a truck:

(a) Is preferably located for right hand operation.

(b) Is a single lever used to perform more than one function. Push button or pre-selected controls shall be properly identified.

(c) Is clearly and durably identified to indicate function and direction of motion of load or equipment.

(d) Is self-centering.

R 408.12139 Load handling controls; direction of motion and guards.

Rule 2139. (1) A lever or handle type control, including a toggle switch, shall be in accordance with Table 1 “Direction of Motion.”

(2) Moving parts that represent a hazard from the operator's position shall be protected by suitable guards.

TABLE 1
DIRECTION OF MOTION

Function	Of Load Or Equipment	Of the Operator’s Hand When Actuating The Control Handle While Facing The Load
Hoist	up	rearward or up
	down	forward or down
Tilt	rearward	*rearward or up
	forward	forward or down
Reach	retract	*rearward
	extend	forward
Clamp	clamp	rearward or up
	release	forward or down
Side Shift	right	rearward or up
	left	forward or down
Rotate Laterally	clockwise	rearward or up
	counterclockwise	forward or down
Rotate Longitudinally	rearward	*rearward or up
	forward	forward or down

*The sense of rotation of the control handle is intended to be in the same direction as the desired motion of the mast or load.

R 408.12143 Overhead guard on high-lift truck.

Rule 2143. (1) Except as provided in subrule (2) of this rule, a high-lift truck shall be fitted with an overhead guard. The overhead guard shall be capable of supporting a uniformly distributed static load in accordance with the following table. The overhead guard is not intended to withstand the impact of a falling capacity load.

(2) Table 2 “Overhead Guard Test” reads as follows:

TABLE 2 OVERHEAD GUARD TEST	
Truck Capacity Rating (in pounds)	**Static Test Load as a% of Truck capacity Rating**
Through 5,000	200% of truck rating
Over 5,000 through 10, 000	10,000 pounds plus 100% of increment rating over 5,000 pounds
Over 10,000 through 20,000	15,000 pounds plus 50% increment rating over 10,000 pounds

(3) An overhead guard may be omitted from a high-lift truck if the truck is never used to lift or raise material or objects more than 72 inches measured from the floor to the forks and if all of the following are complied with:

(a) The load is limited to a single rack or pallet.

(b) The truck is not operated in an area where material or objects are stacked above the operator's head.

(c) A sign with lettering not less than 1/2-inch high is securely attached in the area of the operator's controls stating, "This truck shall not be used to lift materials above the operator's head or in an area where materials are stacked above the operator's head."

(4) A low-lift rider truck which is used to lift material stacked higher than the head of the operator, and which would likely vibrate and fall back onto the operator, shall be provided with an overhead guard.

(5) The overhead guard shall be capable of withstanding the impact of a 100-pound solid hardwood cube, or equivalent, dropped a distance of 5 feet 10 times, without failure or without permanent deflection exceeding 3/4 inch.

(6) The overhead guard shall be constructed in a manner that does not interfere with visibility. Openings in the top shall not exceed 6 inches in 1 of the 2 dimensions, width or length. The guard shall be large enough to extend over the operator under all normal circumstances of truck operation, including forward tilt.

(7) A fork truck equipped with a single-tilt cylinder shall be made to avoid injury to the operator by the overhead guard resulting from failure of this cylinder or associated parts.

(8) On a truck where the operator is seated, a vertical clearance of not less than 39 inches should be maintained from the point of maximum depression of the seat under the operator to the underside of the section of the overhead guard under which the operator's head moves during normal operation.

(9) On a powered industrial truck where the operator stands on a platform, a vertical clearance of not less than 74 inches should be maintained from the platform to the underside of the section of the overhead guard under which the operator's head moves during normal operation.

(10) Where head room conditions limit the overall lowered height of the truck, a normal overhead guard height may be reduced.

(11) An overhead guard is intended to offer protection from the impact of small packages, boxes, and bagged material representative of the job application, but not to withstand the impact of a falling capacity load.

EMPLOYER RESPONSIBILITIES

R 408.12151 Operator selection.

Rule 2151. An employer shall be able to demonstrate that an employee is trained and qualified to operate a powered industrial truck prior to authorizing the employee to operate a powered industrial truck.

R 408.12152 Training.

Rule 2152. (1) An employer shall provide training to the employee before the employee's assignment as an operator of a powered industrial truck. Instruction shall include all of the following:

(a) Capacities of the equipment and attachments.

(b) Purpose, use, and limitations of controls.

(c) How to make daily checks.

(d) Practice and operating assigned vehicles through the mechanical functions necessary to perform the required job.

(e) The requirements contained in R 408.12171 to R 408.2193.

(f) Hazards associated with exhaust gases produced by fossil fuel powered industrial trucks such as carbon monoxide, or components of diesel exhaust, and hazards associated with the handling of electrolyte chemicals used for battery operated trucks such as sulphuric acid, shall be provided in accordance with General Industry Safety Standard Part 92 “Hazard Communication,” as referenced in R 408.12111.

(2) Training shall consist of a combination of formal instruction such as lecture, discussion, interactive computer learning, videotape, written material, practical training, and testing of the operator's performance in the workplace as required in R 408.12153.

(3) An employer shall provide refresher training in relevant topics to an operator under any of the following conditions:

(a) An operator has been observed to operate the vehicle in an unsafe manner.

(b) An operator has been involved in an accident or a near-miss incident.

(c) An operator has received an evaluation that reveals that the operator is not operating the truck safely.

(d) An operator is assigned to a different type of truck.

(e) A condition in the workplace changes that could affect safe operation of the truck.

(4) An evaluation of each operator's performance shall be conducted before renewal of a truck operator permit. An individual who is authorized by the employer and who has the knowledge, training, and experience to train and evaluate the competence of the operator shall provide training and evaluation.

R 408.12153 Testing.

Rule 2153. (1) An employer shall test an employee before authorizing the employee to operate a powered industrial truck, except a motorized hand truck. The test shall check the employees on the following:

(a) Operating ability.

(b) Knowledge of the equipment.

(c) Knowledge of the requirements contained in R 408.12171 to R 408.12193.

(d) Knowledge of daily checks.

(2) An employer shall provide for a performance test to determine whether the employee can operate the assigned powered industrial truck through the functions necessary to perform the required work.

(3) An employee who has a valid permit to operate a powered industrial truck issued by another employer may be tested as prescribed in this rule without meeting the training requirements of R 408.12152.

R 408.12154 Permits.

Rule 2154. (1) An employer shall provide the employee with a permit to operate a powered industrial truck only after meeting the requirements prescribed in R 408.12151, R 408.12152, and R 408.12153. A permit is optional for operators of motorized hand low lift trucks.

(2) An employee being trained is exempt from the permit requirement of subrule (1) of this rule for a period of not more than 30 days, provided the employee is under the supervision of an individual who is authorized by the employer and who has the knowledge, training, and experience to train operators and to evaluate their competence, and that the training period does not endanger the trainee or other employees.

(3) A permit shall be carried by the operator or be available upon request by a department representative at all times during working hours.

(4) A permit shall indicate the type of truck an operator has been trained on and is qualified to operate.

(5) A permit to operate a powered industrial truck is valid only with the employer who issued the permit, and the permit shall be issued for a period of not more than 3 years. An employee may continue to operate a powered industrial truck if the employee's handicaps or inabilities do not prove detrimental to his or her task.

(6) A permit shall contain all of the following information (see sample permit):

(a) Firm name.
(b) Operator's name.
(c) Operator I.D. number, if any.
(d) Name of issuing authority.
(e) Type of truck authorized to operate.
(f) Operator restrictions, if any. The permit shall state the nature of the restriction.
(g) Date issued.
(h) Date expiring.

(7) A sample permit is set forth as follows:

SAMPLE PERMIT

INDUSTRIAL TRUCK OPERATOR PERMIT

(Insert Firm Name)

Operator's Name:_____

Operator's Number:_____

Is Authorized To Operate:_____
(Insert Type of Truck(s) Authorized)

Restrictions:_____
(Explanation of Restrictions)

Date Issued:_____
(Month – Day – Year)

Date Expiring:_____
(Month – Day – Year)

By Issuing Authority: _____
Title

R 408.12155 Restriction of use.

Rule 2155. A powered industrial truck used in an environment containing the following substances shall be equipped as prescribed in NFPA standard 505 “Fire Safety Standard for Powered Industrial Trucks Including Type Designations, Areas of Use, Conversions, Maintenance, and Operations,” 1996 edition, as adopted in R 408.12111.

(a) Gases or vapors, such as, but not limited to, acetylene, hydrogen, oxygen, ether, gasoline, naphtha, or acetone, which may be present in quantities sufficient to produce an explosive or ignitable mixture.

(b) Combustible mixtures of dusts such as, but not limited to, metal dust, coal dust, coke dust, grain dust, flour dust, or organic dust.

(c) Ignitable fibres such as, but not limited to, baled waste, cocoa fibre, cotton, excelsior, kapok, or oakum.

R 408.12161 Mechanical condition and maintenance.

Rule 2161. (1) An employer shall not permit a powered industrial truck to be used if:

(a) The service and parking brakes do not perform their intended function.

(b) The fuel system leaks.

(c) A lift cylinder of a load engaging means allows a downward drift of the load engaging means loaded or unloaded in excess of 5 inches in 5 minutes.

(d) A tilt cylinder of a mast allows a forward drift of the mast in excess of 2 degrees in 5 minutes with the mast in a vertical position and a capacity load on the fork or load engaging means.

(e) The steering mechanism allows free play of the steering wheel of more than 1/4 turn on trucks capable of speeds up to 8 miles per hour and more than 1/8 turn on trucks capable of speeds over 8 miles per hour.

(f) A hydraulic system leaks and creates a hazard for an employee and equipment in the area.

(2) Repairs to a fuel and ignition system which involve a fire hazard shall be made only in a designated location. Repairs shall not be made in a location made hazardous by:

(a) Flammable gases or vapors.

(b) Combustible dusts.

(c) Ignitable fibers.

(3) Repairs to the truck electrical system shall be made only after the battery has been disconnected.

(4) A replacement part shall have not less than the equivalent safety of the original part.

(5) A water muffler shall have the water maintained at not less than 75% of capacity. A water muffler equipped with a screen shall have the screen maintained to accomplish its intended purpose. When an exhaust system of this type emits sparks or flames, the truck shall be removed from service and repaired.

(6) A truck running in excess of normal operating temperature which creates a hazardous condition shall be removed from service and repaired.

(7) A truck shall be maintained in a condition reasonably free of lint, excess oil, and grease. Solvent with a flash point of less than 100 degrees Fahrenheit shall not be used to clean the truck. Precautions regarding ventilation, fire, and toxicity shall be observed when using a cleaning agent.

(8) A truck approved for use of 1 type of fuel may be converted to another type of fuel if the conversion qualifies the truck to its new designation, such as GS, LP, or LPS. Only approved parts shall be used. The conversion shall be as prescribed in R 408.12132(2).

(9) All repairs shall be made by authorized personnel.

R 408.12162 Blocks and safety stands for maintenance.

Rule 2162. (1) An employer shall provide the following:

(a) Chock blocks, support blocks, or jack stands for the maintenance department's use when repairing powered industrial trucks or their components.

(b) Blocks or safety stands as a means of support for powered industrial trucks elevated from the floor by a hoist or chain fall.

(2) When repairing a powered industrial truck, an employee shall use chock blocks, support blocks, or jack stands if there is a hazard from movement.

(3) An employee shall not place his or her body under a powered industrial truck unless the powered industrial truck is supported by properly arranged blocks or jack stands capable, in total, of supporting a minimum of 1 1/2 times the weight of the component of the truck to be repaired.

R 408.12163 Fuel.

Rule 2163. (1) An employer shall provide safety fuel cans where trucks are refueled with gasoline at other than a gas pump area.

(2) An employer shall provide a special area for refueling that is not less than 25 feet from a source of open flame or spark and the area shall be posted to this effect.

(3) Use and storage of LP gas shall be as specified by General Industry Safety Standard Part 56 “Storage and Handling of Liquefied Petroleum Gases,” as referenced in R 408.12111.

(4) Handling and storage of fuel, such as gasoline and diesel fuel, shall be as prescribed in General Industry Safety Standard Part 75 “Flammable and Combustible Liquids,” as referenced in R 408.12111.

(5) Smoking while refueling is prohibited.

(6) Fuel level shall not be checked by use of an open flame.

R 408.12164 Electric trucks.

Rule 2164. (1) Where electric trucks are used, an employer shall provide a designated area for battery changing, charging, or both, which shall be performed by a trained and authorized employee.

(2) An employer shall ensure that provisions are made in a battery charging area where batteries are removed from the truck for flushing and neutralization of spillage, for fire protection, and for air movement sufficient to disperse fumes from gassing batteries.

(3) Smoking and other sources of ignition is prohibited in areas.

(4) An employer shall assure that an employee is trained to position the truck and apply the brake before changing or charging a battery and to position and secure a reinstalled battery before releasing the truck for use.

(5) Material handling equipment, such as, but not limited to, a conveyor or overhead hoist, shall be used for removing and replacing a battery. A spreader bar or an equivalent device shall be used with any overhead battery hoist so that the lifting stresses are vertical. A chain type powered battery hoist shall have a container to accumulate the excess lifting chain. When a hand hoist is used, an uncovered battery shall be covered to prevent the hand chain from shorting on cell connectors or terminals. Tools and other metallic objects shall be kept away from the terminals.

(6) When mixing electrolyte for a battery, an employer shall ensure the use of a carboy tilter or siphon for handling electrolyte. Acid concentrate shall be poured into water; water shall not be poured into acid concentrate.

(7) The following apply to charging a battery:

(a) The vent cap shall be kept in place and functioning.

(b) The battery or compartment covers where provided shall be kept open to dissipate heat and gases.

(8) The electrolyte level shall not be checked with an open flame.

(9) Where there is a potential for employee exposure to injurious corrosive electrolyte solutions (e.g. sulfuric acid) associated with battery powered industrial trucks, the employer shall provide both of the following:

(a) Personal protective equipment in accordance with General Industry Safety Standard Part 33 “Personal Protective Equipment” and Occupational Health Standard Part 433 “Personal Protective Equipment,” as referenced in R 408.12111.

(b) Suitable facilities for quick drenching or flushing of eyes and body within the work area for immediate emergency use in accordance with Occupational Health Standard Part 472 “Medical Services and First Aid,” as referenced in R 408.12111.

R 408.12165 Dockboards and plates.

Rule 2165. (1) An employer shall provide dockboards and plates designed to carry the load imposed on them. The carrying capacity shall be marked on a dockboard or plate purchased after April 17, 1979.

(2) The dockboard or plate shall be secured in position either by being anchored or equipped with a device which will prevent its slipping out of position.

(3) Hand holds, or other effective means, shall be provided to permit safe handling. Where a fork truck is used, fork loops, pockets, or lugs shall be provided for safe handling.

(4) A dockboard or plate shall have a slip-resistant surface, such as, but not limited to, a tread plate, designed to reduce the possibility of slipping by an employee or truck.

(5) A dockboard or plate shall be designed and maintained so the end edges will have a sufficient contact with the dock or loading platform and the carrier to prevent the dockboard or plate from rocking or sliding out of position.

(6) A portable dockboard or plate used by a powered industrial truck to bridge an opening in excess of 18 inches shall have curbs. The height of the curb on a dockboard or plate used by a powered industrial truck with solid or cushion tires shall be not less than 15% of the diameter of the largest tire of the truck, however, the maximum curb height need not exceed 3 inches

R 408.12166 Order picker trucks; high-lift platforms.

Rule 2166. Whenever an order picker truck, high-lift is equipped with vertical only or vertical and horizontal controls traveling with the lifting carriage or forks for lifting an employee, an employer shall assure that the following is provided:

(a) A platform equipped with railing or other limiting device, including but not limited to a chain, strap or tether.

(b) A control device whereby the employee on the platform can shut off the power to the truck.

(c) Protection from falling objects as indicated necessary by the operating conditions.

R 408.12167 Fork lift truck platforms.
Rule 2167. (1) An employee shall not be lifted or transported, except when a platform is attached to the forks by enclosed sleeves, a safety chain, or a mechanical device in such a manner that the platform cannot tip or slip.

(2) A platform shall be equipped with a railing not less than 36 inches or more than 42 inches high and a toeboard. The railing shall consist of 1 of the following materials:

(a) Wood posts of at least 2 x 4 inch nominal stock; the top rail shall be made of 2 right angle pieces of not less than 1 x 4 inch nominal stock and an intermediate rail of 1 x 4 inch nominal stock.

(b) Steel or aluminum pipe posts and rails of not less than 1 inch inside diameter and an intermediate rail of 3/4 inch inside diameter pipe.

(c) Structural steel or aluminum posts, rails and intermediate rail of angle iron of not less than 1 x 1 x 3/16 inch size or other shapes of equal strength.

(3) The intermediate rail may be omitted from 1 side.

(4) A toeboard shall be made of not less than 1 x 4 inches nominal wood stock or a material of equal strength.

R 408.12168 Load backrest extensions.
Rule 2168. A load backrest extension, manufactured in accordance with R 408.12111, shall be used whenever necessary to minimize the possibility of a load, or part of it, falling rearward.

R 408.12169 Spinner knobs.
Rule 2169. A spinner knob shall not be attached to a steering handwheel of a truck unless originally equipped with such; the truck is equipped with power steering; or the truck is equipped with an anti-kickback device on the steering mechanism. The knob shall be installed within the periphery of the handwheel.

EMPLOYEE RESPONSIBILITIES

R 408.12171 Daily checks.
Rule 2171. (1) At the start of each shift, the operator of a powered industrial truck or a qualified employee shall perform daily checks of the equipment as required by the employer. See Appendix B for suggested inspection checklist.

(2) An employer shall ensure that any defects that would affect the safe operation of the equipment are repaired before use.

(3) An operator shall promptly report any defect on the powered industrial truck to the employer.

R 408.12172 General operating rules.
Rule 2172. (1) An operator shall safeguard other employees at all times.

(2) An operator shall not drive a truck up to anyone who is standing in front of a fixed object.

(3) An operator shall not allow anyone to stand or pass under the elevated portion of any powered industrial truck, whether loaded or empty.

(4) No employee, except the operator, shall ride on a powered industrial truck unless the truck is provided with a passenger seat. Passenger seats on a fork lift truck shall be under the overhead guard.

R 408.12173 Position of arms and legs.
Rule 2173. An employee shall not place his or her arms or legs in either of the following positions:

(a) Between the uprights of the mast.

(b) Outside the running lines of a moving truck.

R 408.12174 Parking.
Rule 2174 (1) When leaving a powered industrial truck unattended, an operator shall fully lower the forks flat to the floor, neutralize the controls, set the brakes, and shut the power off.

(2) Whenever it is necessary to leave a truck on an incline, the truck wheels shall be blocked and the steering wheels turned toward the curbing, wall or railing.

R 408.12175 Towing and pushing.
Rule 2175. A truck shall not be used to tow or push railroad cars, unless it is specifically designed for that purpose. Freight car doors shall not be opened or closed by using a powered industrial truck, unless it is equipped with attachments designed for that purpose.

R 408.12176 Loading trucks, trailers, and railcars.
Rule 2176. (1) An employer shall ensure that a highway truck and trailer are not boarded by a powered industrial truck before the highway truck and trailer has its brakes set and not less than 2 wheels blocked or be restrained by other mechanical means installed in a manner that will hold the trailer from movement.

(2) An employer shall ensure that wheel stops, hand brakes, or other approved positive protection to prevent railroad cars from moving during loading or unloading operations are provided, and before and while dockboards or bridge plates are in position.

(3) An employer shall ensure that provisions are made to isolate rail cars during switching operations as required by General Industry Safety Standard Part 1 “General Provisions,” as referenced in R 408.12111.

(4) An employer shall ensure that the landing gear of all semi-trailers are visually inspected immediately before the trailer is uncoupled from the tractor to assure ability of the landing gear to support the imposed load.

(5) A semitrailer less than 30 feet in length, when not coupled to a tractor and being loaded or unloaded with a powered industrial truck, shall be provided a support capable of sustaining the load at the front.

(6) An employer shall ensure that the flooring of trucks, trailers, and railroad cars are checked for breaks and weakness before they are driven onto

R 408.12177 Surveying path of travel.
Rule 2177. Before moving or stacking, an operator shall survey the path of travel in order to avoid obstacles, such as, but not limited to, pipes, light fixtures, and sprinkler systems. A safe distance shall be maintained from the edge of ramps or platforms while on an elevated dock.

R 408.12178 Operations in hazardous areas.
Rule 2178. When operating a powered industrial truck in a hazardous area, only a truck specifically equipped for such operation shall be used. See R 408.12155.

R 408.12179 Reporting accidents.
Rule 2179. A powered industrial truck operator shall report all accidents involving injury to an employee or damage to buildings and equipment to the employer.

R 408.12180 Clear access.
Rule 2180. An operator shall maintain clear access of fire aisles, to stairways and fire equipment when depositing loads.

R 408.12181 Making repairs.
Rule 2181. Operators shall not make any repairs or adjustments unless specifically authorized to do so.

R 408.12182 Flammables.
Rule 2182. A fuel tank shall not be filled while the engine is running. Spilled fuel shall be carefully washed away or completely evaporated, and the fuel tank cap replaced before restarting the engine.

MOVING TRUCKS

R 408.12183 Operation.
Rule 2183. (1) An operator shall operate a powered industrial truck according to the rules of this part and in accordance with local traffic rules when on a public road.

(2) When following another truck, a safe distance shall be maintained approximately 3 truck lengths from the vehicle ahead and the vehicle shall be kept under control at all times.

(3) An operator shall give the right of way to ambulances, fire trucks, or other emergency vehicles.

(4) An operator of a rider-type powered industrial truck shall not pass another truck traveling in the same direction at intersections, blind spots, or other dangerous locations.

(5) An operator shall cross railroad tracks diagonally whenever possible and shall not park closer than 8 1/2 feet from the center of a railroad track.

R 408.12184 Slow down at crossings and obstructions.
Rule 2184. An operator shall slow down and sound the warning device at cross aisles and other locations where the operator's vision is obstructed by fixed objects.

R 408.12185 Clear view.
Rule 2185. An operator shall look in the direction of and keep a clear view of the direction of travel. When moving loads blocking the forward visibility, for safe handling an operator shall drive the truck with the load trailing.

R 408.12186 Ascending and descending grades.
Rule 2186. (1) An operator shall ascend and descend grades of 10% or more at a speed of not more than 2 miles per hour.

(2) When ascending or descending a grade that exceeds the back-tilt of the mast, the load shall be facing upgrade.

(3) On all grades, unloaded trucks shall be driven with the load engaging means downgrade, tilted back, and raised only as far as necessary to clear the floor or road surface.

R 408.12187 Traveling.
Rule 2187. In level areas an operator shall travel with the load engaging means elevated only sufficiently to clear obstacles on floor or roadway.

R 408.12188 Starts, stops, and turns.
Rule 2188. Starts, stops, and turns shall be made in a manner which will prevent a load from shifting or overturning the truck.

R 408.12189 Horseplay.
Rule 2189. Stunt driving and horseplay shall not be permitted.

R 408.12190 Wet floors, dockboards, and bridgeplates.

Rule 2190. (1) An operator shall drive at a slow speed over wet or slippery floors.

(2) Before driving over a dockboard or bridgeplate, an operator shall observe that the dockboard or bridgeplate is secured.

R 408.12191 Entering elevators.

Rule 2191. (1) An operator shall drive onto elevators only when authorized to do so.

(2) An elevator shall be entered squarely after it is leveled to the floor. Once on the elevator an operator shall neutralize the controls, set the brakes and shut off the power.

(3) Motorized hand trucks shall enter an elevator and other confined areas with the load end forward.

(4) A truck shall not enter an elevator if the combined weight of the load and truck exceeds the capacity of the elevator.

R 408.12192 Running over loose objects.

Rule 2192. An operator of a truck shall avoid running over loose objects.

LOADING SAFETY

R 408.12193 Operators; loading.

Rule 2193. An operator shall:

(a) Operate a truck equipped with attachments as a partially loaded truck when not transporting a load.

(b) When loading a fork lift truck, place the load engaging means under the load as far as possible and tilt the mast backwards to cradle the load.

(c) Exercise caution when tilting loads especially when they are segmented.

(d) Lift or transport only a load that is within the rated capacity of the truck.

(e) Lift or transport only a load that cannot fall out of a basket or container, or off the load engaging means during the normal movements of the truck.

(f) Tilt an elevated load forward only when in a deposit position over a rack or stack.

APPENDIX A
TYPES OF TRUCKS

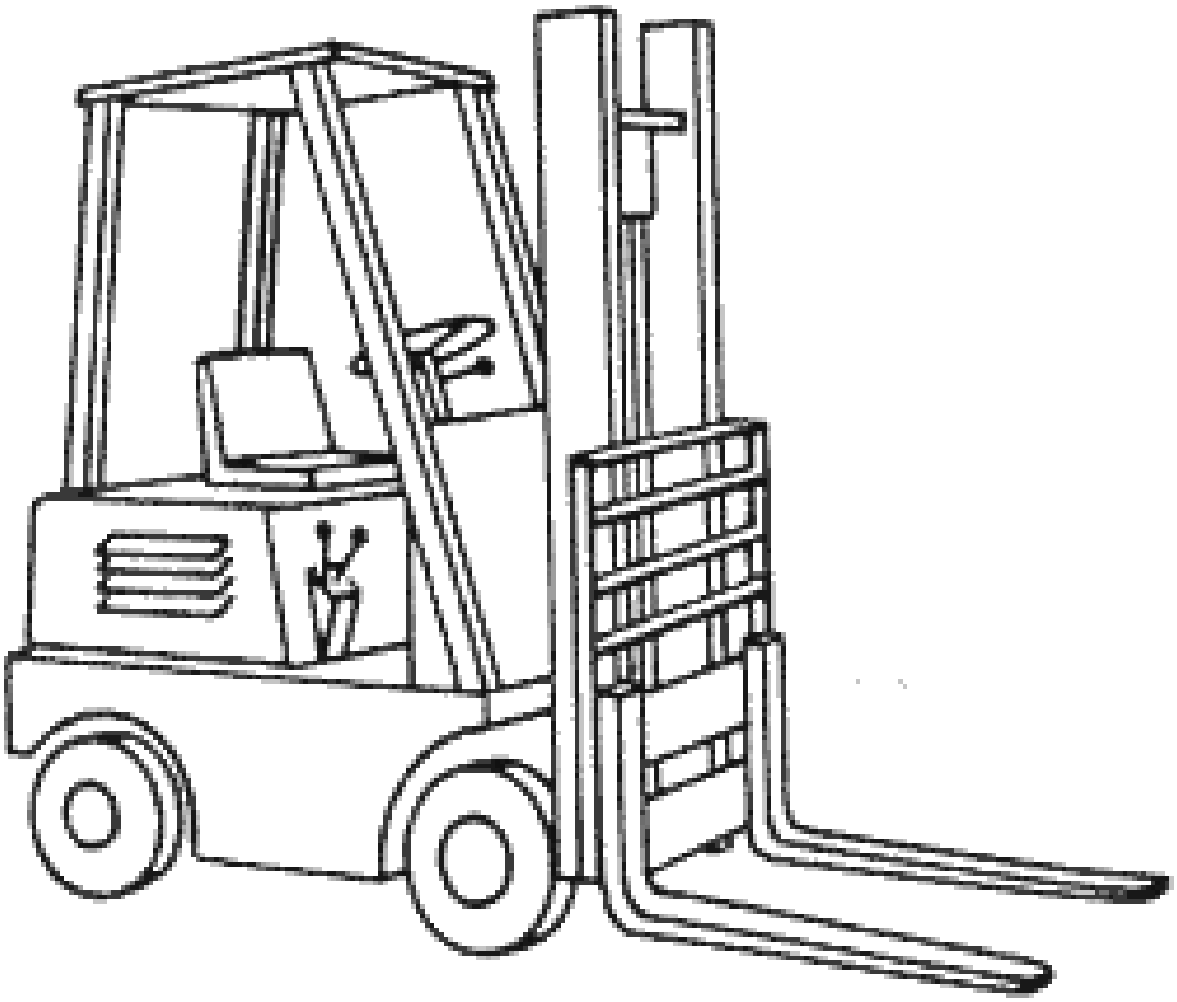

FIGURE 1

- **High-Lift Truck**
- **Counterbalanced Truck**
- **Cantilever Truck**
- **Rider Truck**
- **Fork Lift Truck**

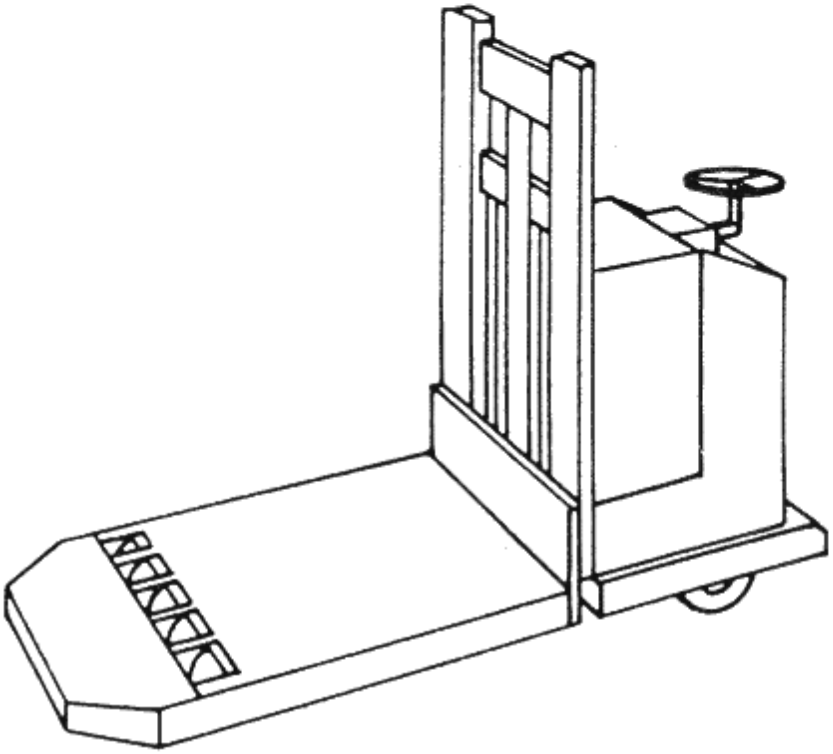

FIGURE 2

- **High-Lift Truck**
- **High-Lift Platform Truck**

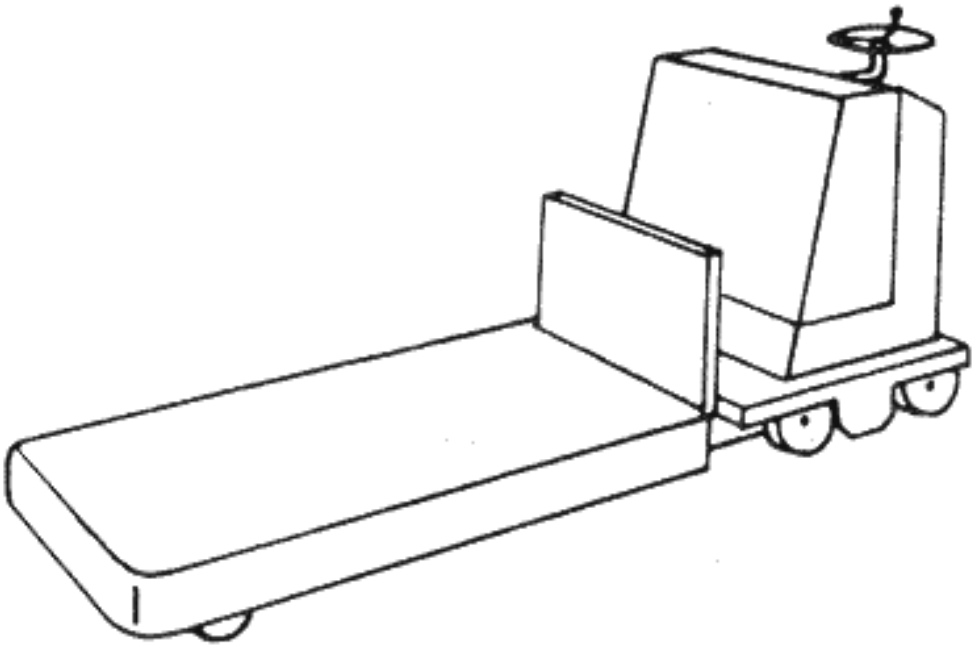

FIGURE 3

- **Low-Lift Truck**
- **Low-Lift Platform Truck**

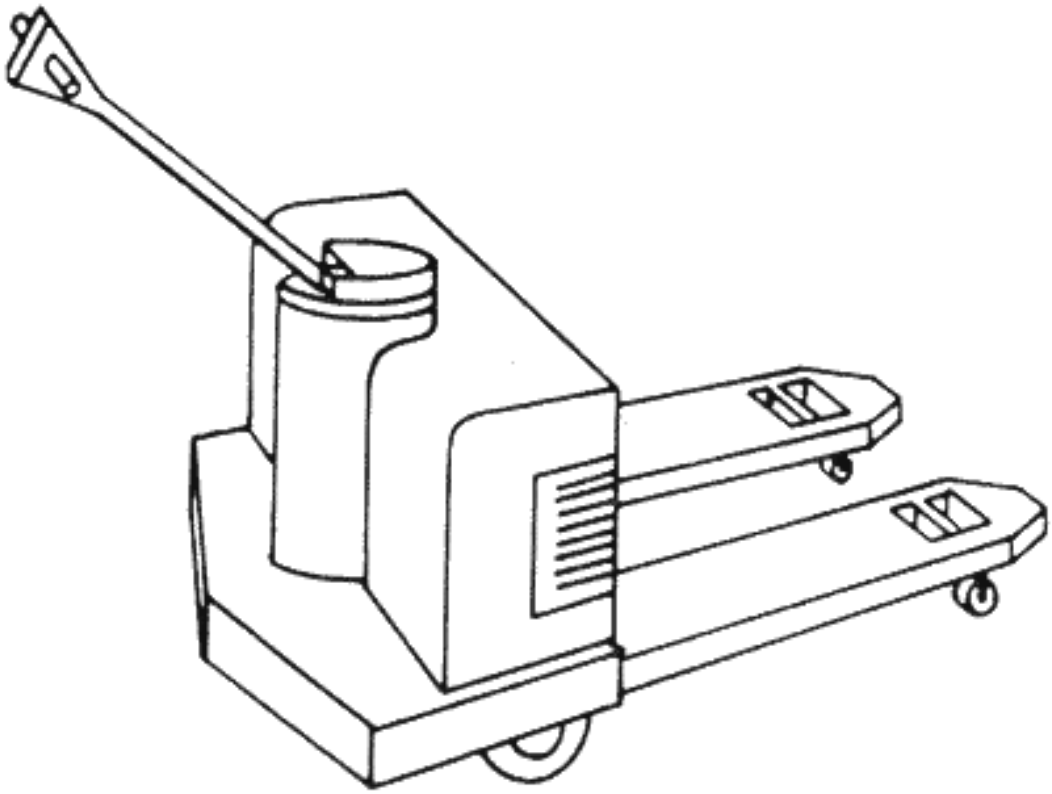

FIGURE 4

- **Motorized Hand Truck**
- **Pallet Truck**

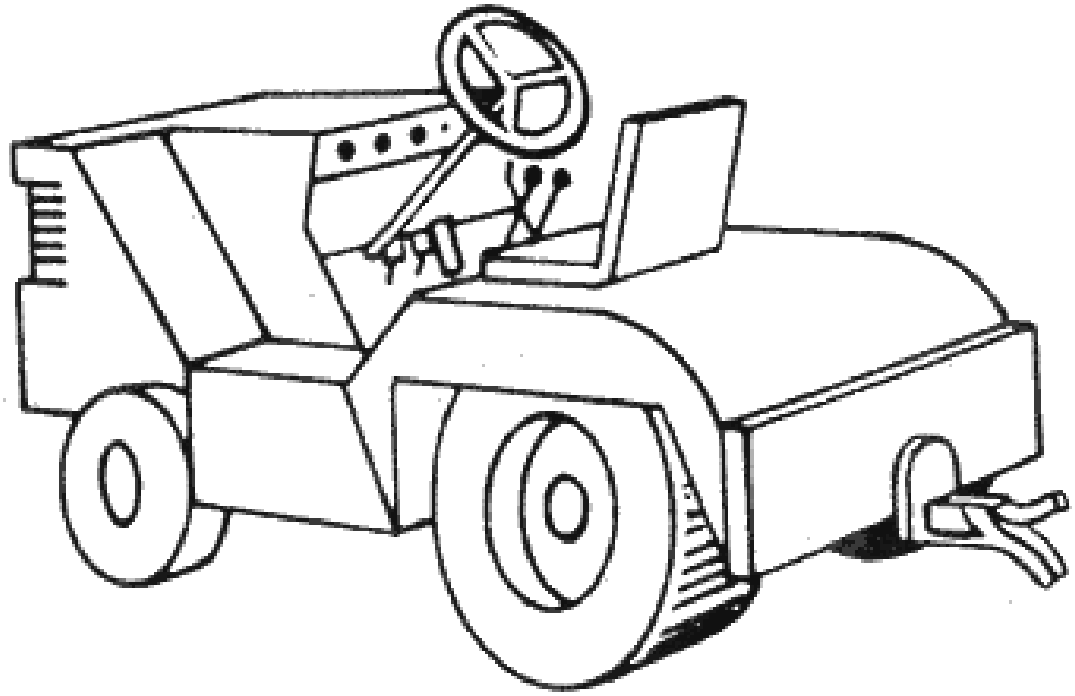

FIGURE 5

- **Industrial Tractor**

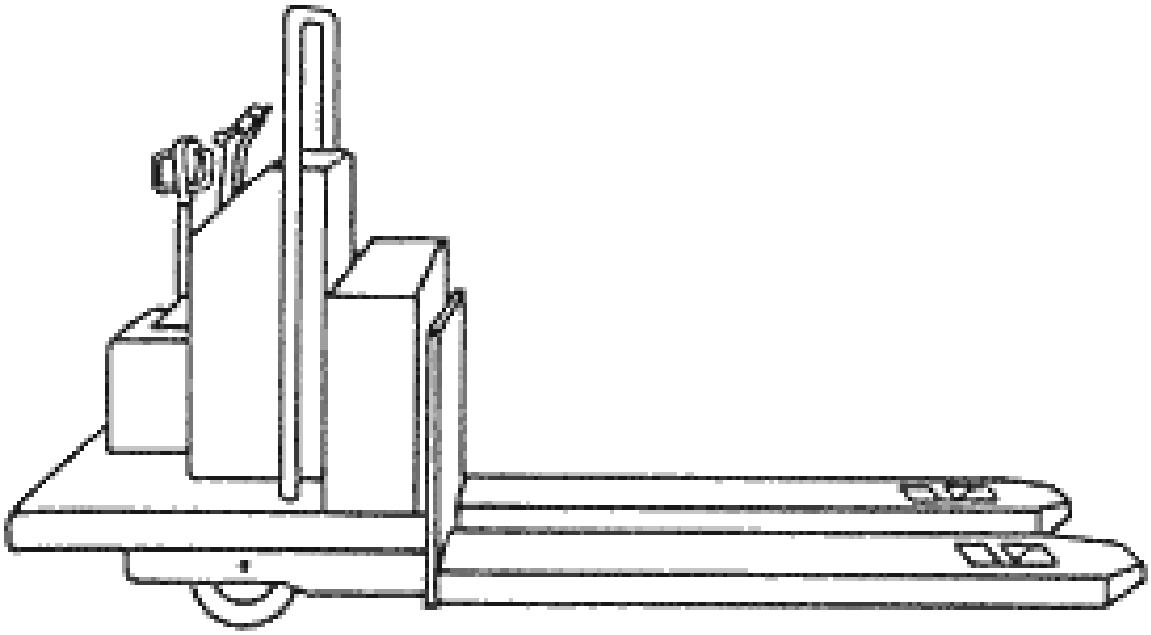

FIGURE 6

- **Motorized Hand/Rider Truck**

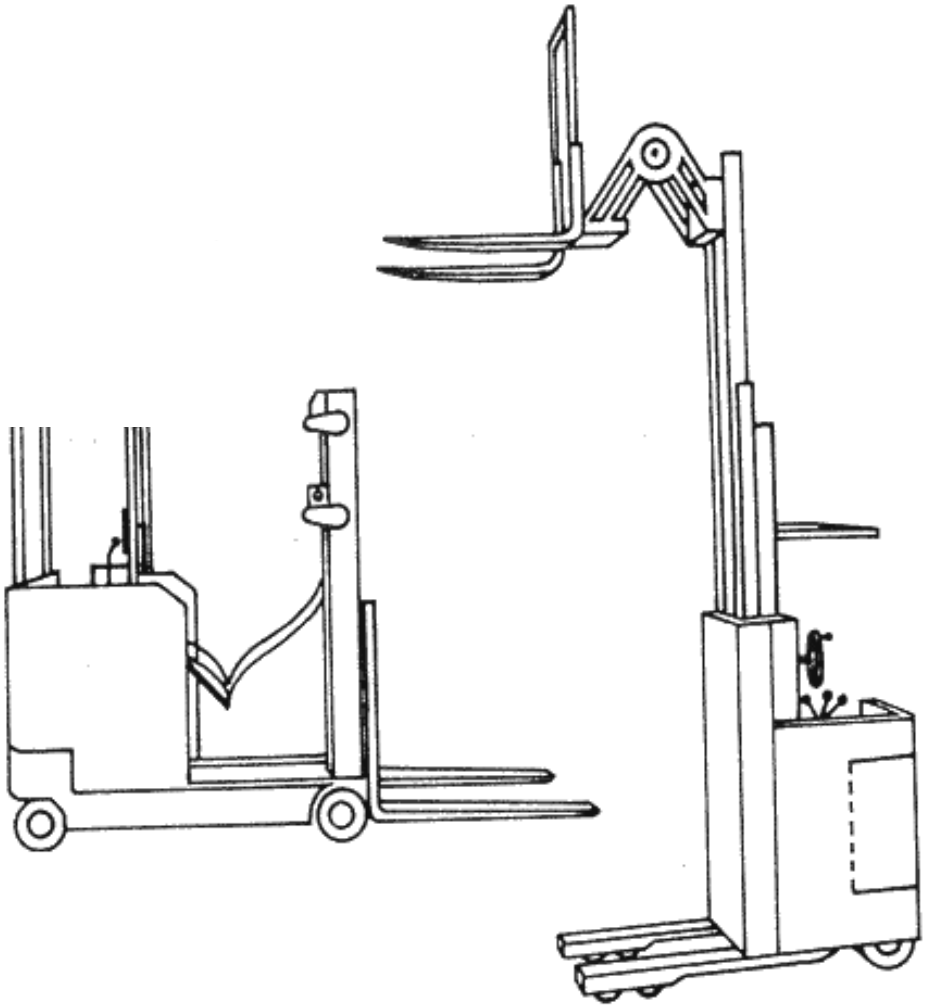

FIGURE 7

- **Reach Truck**

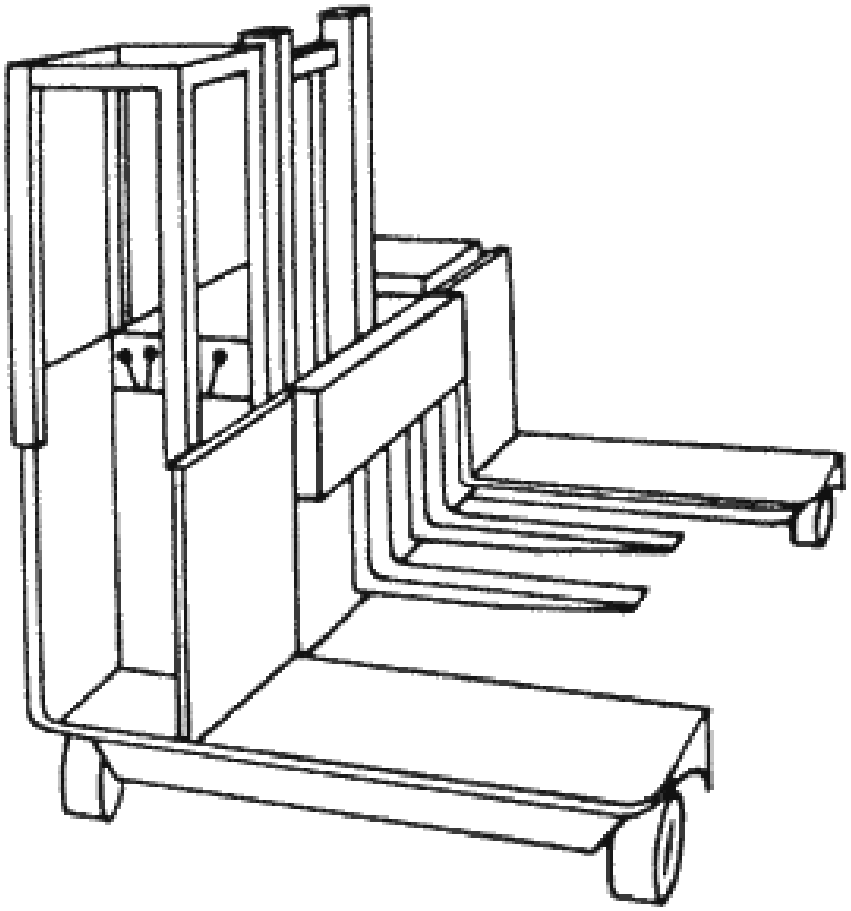

FIGURE 8

- **Side-Loader Truck**

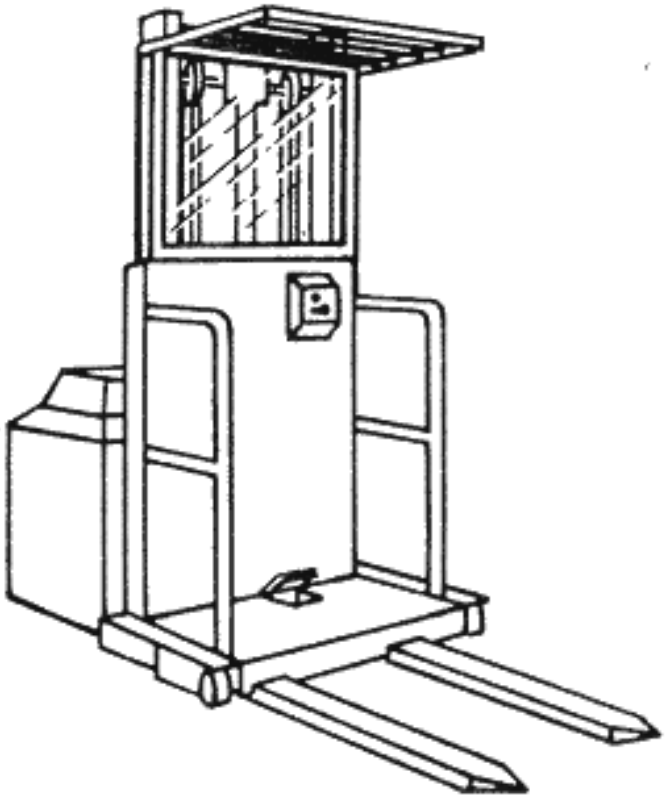

FIGURE 9

- **Order Picker Truck High Lift**

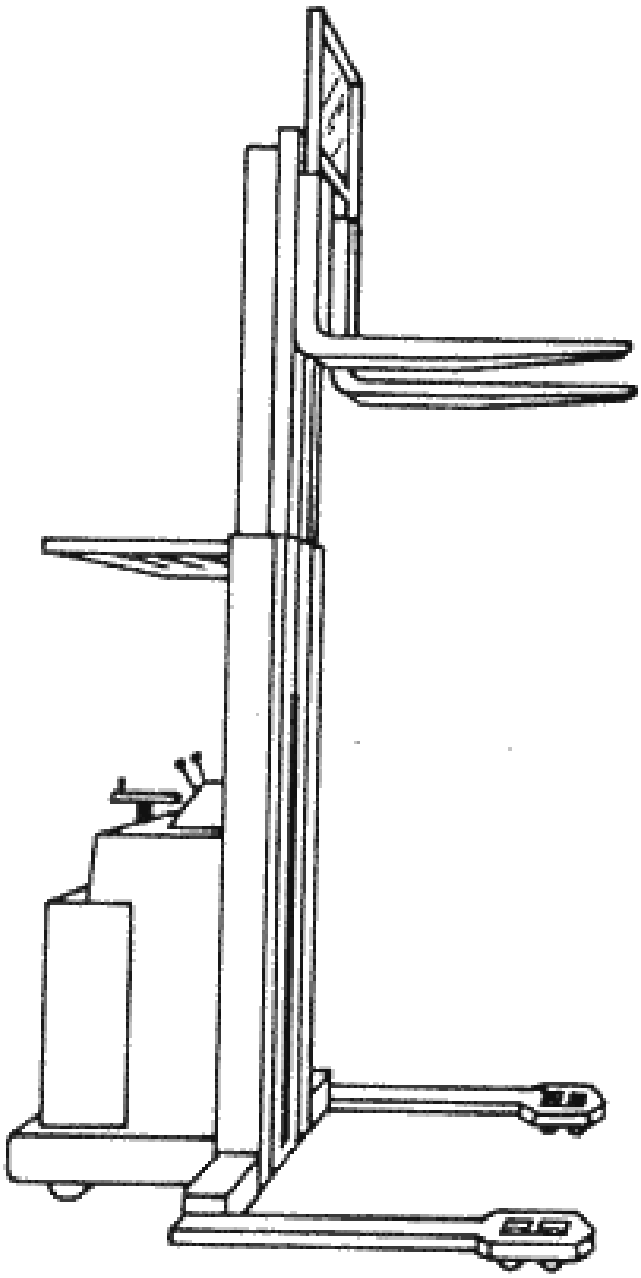

FIGURE 10

- **Narrow-Aisle Truck**
- **Straddle Truck**

APPENDIX B
FORK TRUCK PRE-OPERATION INSPECTION CHECKLIST

Complete the pre-operation checklist with one of the following responses after each item.

- **If working properly, enter an X in the "O.K." column.**
- **If not working properly, enter an X in the "Needs Repair" column and explain the condition.**

Turn the checklist in to the appropriate person.

Truck No._____ **Operator**_____

Date _____ **Type of Truck**_____

Shift 1 2 3 **DEPARTMENT**_____

Checklist	O.K.	Needs Repair
Accessory Control		
Battery Indicator		
Brakes		
Fluid Levels		
Forks, Mast, Chains, Stops, Backrest		
Horn		
Hydraulic Cylinders		
Hydraulic Hoses and Fittings		
Lift Control		
Lights		
Limit Switches		
LP Leaks		
Overhead Guard		
Steering		
Tilt Control		
Tires and Wheels		

APPENDIX C
STABILITY OF POWERED INDUSTRIAL TRUCKS

(Non-mandatory Appendix to R 408.12152 Training)

A-1. Definitions.

The following definitions help to explain the principle of stability:

Center of gravity is the point on an object at which all of the object's weight is concentrated. For symmetrical loads, the center of gravity is at the middle of the load.

Counterweight is the weight that is built into the truck's basic structure and is used to offset the load's weight and to maximize the vehicle's resistance to tipping over.

Fulcrum is the truck's axis of rotation when it tips over.

Grade is the slope of a surface, which is usually measured as the number of feet of rise or fall over a hundred foot horizontal distance (the slope is expressed as a percent).

Lateral stability is a truck's resistance to overturning sideways.

Line of action is an imaginary vertical line through an object's center of gravity.

Load center is the horizontal distance from the load's edge (or the fork's or other attachment's vertical face) to the line of action through the load's center of gravity.

Longitudinal stability is the truck's resistance to overturning forward or rearward.

Moment is the product of the object's weight times the distance from a fixed point (usually the fulcrum). In the case of a powered industrial truck, the distance is measured from the point at which the truck will tip over to the object's line of action. The distance is always measured perpendicular to the line of action.

Track is the distance between the wheels on the same axle of the truck.

Wheelbase is the distance between the centerline of the vehicle's front and rear wheels.

A-2. General.

A-2.1. Determining the stability of a powered industrial truck is simple once a few basic principles are understood. There are many factors that contribute to a vehicle's stability: the vehicle's wheelbase, track, and height; the load's weight distribution; and the vehicle's counterweight location (if the vehicle is so equipped).

A-2.2. The "stability triangle," used in most stability discussions, demonstrates stability simply.

A-3. Basic Principles.

A-3.1. Whether an object is stable depends on the object's moment at one end of a system being greater than, equal to, or smaller than the object's moment at the system's other end. This principle can be seen in the way a see-saw or teeter-totter works: that is, if the product of the load and distance from the fulcrum (moment) is equal to the moment at the device's other end, the device is balanced and it will not move. However, if there is a greater moment at one end of the device, the device will try to move downward at the end with the greater moment.

A-3.2. The longitudinal stability of a counterbalanced powered industrial truck depends on the vehicle's moment and the load's moment. In other words, if the mathematic product of the load moment (the distance from the front wheels, the approximate point at which the vehicle would tip forward) to the load's center of gravity times the load's weight is less than the vehicle's moment, the system is balanced and will not tip forward. However, if the load's moment is greater than the vehicle's moment, the greater load-moment will force the truck to tip forward.

A-4. The Stability Triangle.

A-4.1. Almost all counterbalanced powered industrial trucks have a three-point suspension system, that is, the vehicle is supported at three points. This is true even if the vehicle has four wheels. The truck's steer axle is attached to the truck by a pivot pin in the axle's center. When the points are connected with imaginary lines, this three-point support forms a triangle called the stability triangle. Figure 1 depicts the stability triangle.

FIGURE 1

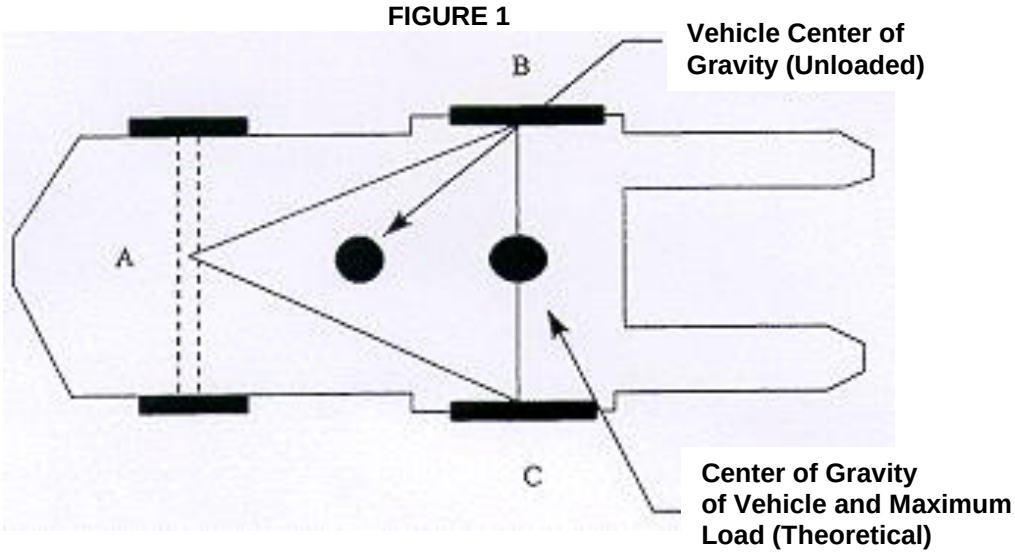

Notes:

1. When the vehicle is loaded, the combined center of gravity (CG) shifts toward line B-C. Theoretically the maximum load will result in the CG at the line B-C. In actual practice, the combined CG should never be a line B-C.
2. The addition of additional counterweight will cause the truck CG to shift toward point A and result in a truck that is less stable laterally.

A-4.2. When the vehicle's line of action, or load center, falls within the stability triangle, the vehicle is stable and will not tip over. However, when the vehicle's line of action or the vehicle/ load combination falls outside the stability triangle, the vehicle is unstable and may tip over. (See Figure 2.)

FIGURE 2

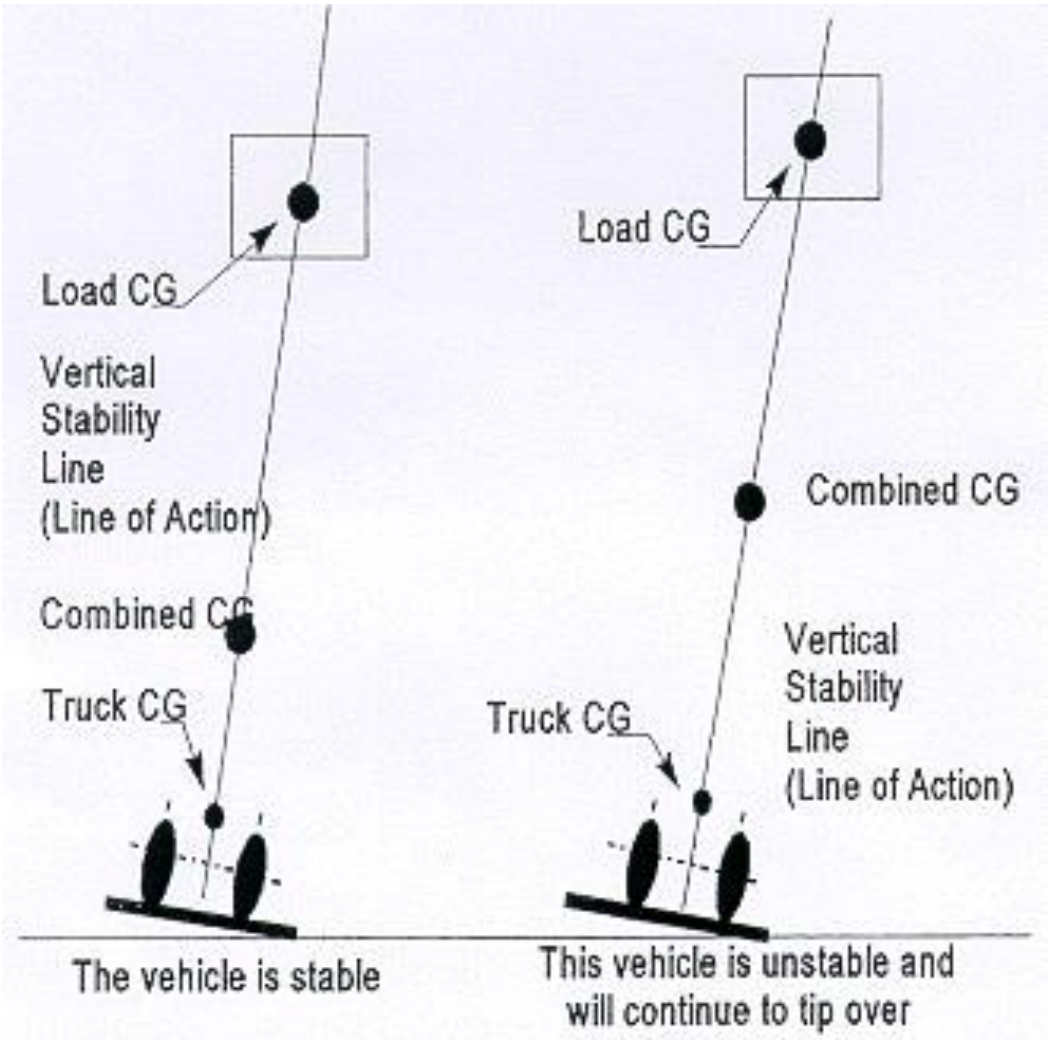

A-5. Longitudinal Stability.

A-5.1. The axis of rotation when a truck tips forward is the front wheels' points of contact with the pavement. When a powered industrial truck tips forward, the truck will rotate about this line. When a truck is stable, the vehicle-moment must exceed the load-moment. As long as the vehicle-moment is equal to or exceeds the load-moment, the vehicle will not tip over. On the other hand, if the load moment slightly exceeds the vehicle-moment, the truck will begin to tip forward, thereby causing the rear to lose contact with the floor or ground and resulting in loss of steering control. If the load-moment greatly exceeds the vehicle moment, the truck will tip forward.

A-5.2. To determine the maximum safe load-moment, the truck manufacturer normally rates the truck at a maximum load at a given distance from the front face of the forks. The specified distance from the front face of the forks to the line of action of the load is commonly called the load center. Because larger trucks normally handle loads that are physically larger, these vehicles have greater load centers. Trucks with a capacity of 30,000 pounds or less are normally rated at a given load weight at a 24-inch load center. Trucks with a capacity greater than 30,000 pounds are normally rated at a given load weight at a 36- or 48-inch load center. To safely operate the vehicle, the operator should always check the data plate to determine the maximum allowable weight at the rated load center.

A-5.3. Although the true load-moment distance is measured from the front wheels, this distance is greater than the distance from the front face of the forks. Calculating the maximum allowable load- moment using the load-center distance always provides a lower load- moment than the truck was designed to handle. When handling unusual loads, such as those that are larger than 48 inches long (the center of gravity is greater than 24 inches) or that have an offset center of gravity, etc., a maximum allowable load-moment should be calculated and used to determine whether a load can be safely handled. For example, if an operator is operating a 3000 pound capacity truck (with a 24-inch load center), the maximum allowable load-moment is 72,000 inch-pounds (3,000 times 24). If a load is 60 inches long (30-inch load center), then the maximum that this load can weigh is 2,400 pounds (72,000 divided by 30).

A-6. Lateral Stability.

A-6.1. The vehicle's lateral stability is determined by the line of action's position (a vertical line that passes through the combined vehicle's and load's center of gravity) relative to the stability triangle. When the vehicle is not loaded, the truck's center of gravity location is the only factor to be considered in determining the truck's stability. As long as the line of action of the combined vehicle's and load's center of gravity falls within the stability triangle, the truck is stable and will not tip over. However, if the line of action falls outside the stability triangle, the truck is not stable and may tip over. Refer to Figure 2.

A-6.2. Factors that affect the vehicle's lateral stability include the load's placement on the truck, the height of the load above the surface on which the vehicle is operating, and the vehicle's degree of lean.

A-7. Dynamic Stability.

A-7.1. Up to this point, the stability of a powered industrial truck has been discussed without considering the dynamic forces that result when the vehicle and load are put into motion. The weight's transfer and the resultant shift in the center of gravity due to the dynamic forces created when the machine is moving, braking, cornering, lifting, tilting, and lowering loads, etc., are important stability considerations.

A-7.2. When determining whether a load can be safely handled, the operator should exercise extra caution when handling loads that cause the vehicle to approach its maximum design characteristics. For example, if an operator must handle a maximum load, the load should be carried at the lowest position possible, the truck should be accelerated slowly and evenly, and the forks should be tilted forward cautiously. However, no precise rules can be formulated to cover all of these eventualities.

[63 FR 66270, Dec. 1, 1998]

LICENSING AND REGULATORY AFFAIRS
CUSTOMER DRIVEN. BUSINESS MINDED.

Michigan Occupational Safety and Health Administration
PO Box 30643
Lansing, Michigan 48909-8143
Ph: 517-284-7740

The Department of Licensing and Regulatory Affairs will not discriminate against any individual or group because of race, sex, religion, age, national origin, color, marital status, disability, or political beliefs. Auxiliary aids, services and other reasonable accommodations are available upon request to individuals with disabilities.