For further information
Ph: 517-284-7740
www.michigan.gov/mioshastandards

**DEPARTMENT OF LICENSING AND REGULATORY AFFAIRS**

**DIRECTOR'S OFFICE**

**GENERAL INDUSTRY SAFETY STANDARDS**

Filed with the Secretary of State on June 21, 1972 (as amended May 15, 1974) (as amended October 28, 1976) (as amended May 17, 1983) (as amended November 15, 1989) **(as amended September 16, 2014)**

These rules become effective immediately upon filing with the Secretary of State unless adopted under sections 33, 44, or 45a(6) of 1969 PA 306.

Rules adopted under these sections become effective 7 days after filing with the Secretary of State.

(By authority conferred on the director of the department of licensing and regulatory affairs by sections 16 and 21 of 1974 PA 154, MCL 408.1016 and 408.1021, and Executive Reorganization Order Nos. 1996-2, 2003-18 2003-1, 2008-4, and 2011-4, 445.2001, 445.2011, 445.2025, and 445.2030)

R 408.15202, R 408.15205, R 408.15211, R 408.15221, R 408.15223, R 408.15229, R 408.15231, R 408.15243, R 408.15244, R 408.15251, R 408.15252, R 408.15254, and R 408.15273, of the Michigan Administrative Code are amended, and R 408.152009, R 408.152012a, R 408.15256, R 408.15280, R 408.15282, and R 408.15284 are added, and Occupational Health Rules 3406, 3505 and 5005 are rescinded, as follows:

## PART 52. SAWMILLS

Table of Contents

**GENERAL PROVISIONS** ..... 2
R 408.15201 Scope. ..... 2
R 408.15202 Definition B. ..... 2
R 408.15203 Definition C. ..... 2
R 408.15204 Definitions D to G. ..... 2
R 408.15205 Definition H. ..... 2
R 408.15206 Definitions L to R. ..... 2
R 408.15207 Definitions S. ..... 2
R 408.15208 Definitions T. ..... 3
R 408.15209 Adoption of standards by reference; access to other MIOSHA rules. ..... 3
R 408.15211 Employer responsibilities. ..... 3
R 408.15212 Employees general duties. ..... 4
R 408.15212a Protective equipment. ..... 4
R 408.15213 Burners. ..... 4
R 408.15221 Illumination. ..... 4
R 408.15222 Floors, aisles, roadways, and docks. ..... 5
R 408.15223 Power control. ..... 5
R 408.15224 Hydraulic safety. ..... 5
R 408.15225 Chain, chain slings, and chain fittings. ..... 5
R 408.15226 Cable, wire rope, and wire rope slings. ..... 6
R 408.15227 Housekeeping. ..... 8
R 408.15228 Pressure feed rolls. ..... 8
R 408.15229 Bins, bunkers, hoppers and fuel houses. 8
R 408.15230 Fiber rope. ..... 8
**SPECIFIC EQUIPMENT** ..... 8
R 408.15231 Chippers and hogs. ..... 8
R 408.15232 Log deck. ..... 8
R 408.15233 Debarkers. ..... 8
R 408.15234 Sawmill carriages. ..... 9
R 408.15241 Head band saws and band resaws. ..... 9
R 408.15242 Circular head saw. ..... 9
R 408.15243 Double circular head saw. ..... 9
R 408.15244 Self-feed circular gang saws. ..... 9
R 408.15245 Trimmer saw. ..... 9
R 408.15246 Edger saws. ..... 10
R 408.15247 Bolt, cant, or slat saw. ..... 10
R 408.15251 Woodworking machines. ..... 10
R 408.15252 Kilns. ..... 10
R 408.15253 Storage and transfer of lumber. ..... 11
R 408.15254 Stackers and unstackers. ..... 11
R 408.15256 Cleaning pits. ..... 11
**PALLET EQUIPMENT** ..... 11
R 408.15261 Nailers. ..... 11
R 408.15262 Pallet notchers. ..... 11
**LOG AND MATERIAL HANDLING AND STORAGE** 11
R 408.15271 Hauling trucks, egress and pickup points. ..... 11
R 408.15272 Securing of truck loads. ..... 11
R 408.15273 Log and material handling equipment. ..... 12
R 408.15274 Log unloading and storage general. ..... 12
R 408.15275 Water log dumps. ..... 12
R 408.15276 Dry deck storage. ..... 12
R 408.15280 Air requirements. ..... 13
R 408.15282 Blower, collecting, and exhaust systems. ..... 13
R 408.15284 Pond boats and rafts. ..... 13

## GENERAL PROVISIONS

**R 408.15201 Scope.**
**Rule 5201.** This part provides for the safe maintenance and operation of machinery and equipment by the employer and their safe use by the employees for sawmills, including wood pallet and wood box making plants, in or about places of employment in this state.

**R 408.15202 Definitions; B.**
**Rule 5202.** (1) "Binder" means a chain, cable, or rope used to bind loads.

(2) "Bolt" means a log which is cut to a length of 8 feet or less and which is ready for sawing into boards.

(3) "Bolt saw" means a saw that is used to cut bolts into cants or boards.

(4) "Boom" means logs or timbers fastened together end to end and used to contain floating logs. The term includes enclosed logs.

(5) "Boom sticks" means logs or timbers used in making up a boom.

(6) "Brow log" means a log placed parallel to a roadway at a landing or dump to protect vehicles while loading or unloading.

(7) "Bunk" or "dunnage" means a cross support for a load.

**R 408.15203 Definition C.**
**Rule 5203.** (1) "Cant" means a log slabbed on 1 or more sides.

(2) "Carrier" means an industrial truck which is designed and constructed so that it straddles the load to be transported and is equipped with mechanisms to pick up the load and support it during transportation.

(3) "Chipper" means a machine which cuts material into chips of a predetermined size.

(4) "Chock" or "bunk block" means a wedge that prevents logs or loads from moving.

**R 408.15204 Definitions D to G.**
**Rule 5204.** (1) "Debarker" or "barker" means a machine which removes the bark from a log.

(2) "Dog" means a steel tooth, 1 or more of which are attached to each carriage to hold a log in place on a carriage.

(3) "Edger" means a machine consisting of 2 or more circular saws used to cut boards to width.

(4) "Gang saw" means a machine consisting of 2 or more saw blades used to break down sawmill materials into multiple widths.

(5) "Green chain" means 2 or more endless runs of chain used to carry boards from the final saw.

**R 408.15205 Definitions; H.**
**Rule 5205.** (1) "Head block" means a part of a carriage that holds a log and upon which the log rests. It generally consists of base, knee, taper set, and mechanism.

(2) "Head rig" means a combination of a headsaw and carriage used for the initial breakdown of a log into timbers, cants, and boards.

(3) "Headsaw" means a saw, either circular or band type, used for the initial breakdown of a log into timbers, cants, and boards.

(4) "Hog" means a machine used for cutting, chipping, or grinding slabs, bark, and other coarse residue.

(5) "Husk" means the framework of a circular headsaw.

(6) "Head sawyer" means an operator of a headsaw.

(7) "Kiln tender" means the operator of a kiln.

**R 408.15206 Definitions L to R.**
**Rule 5206.** (1) "Live rolls" means cylinders of wood or metal mounted on horizontal axis or shafts and rotated by power, which are used to convey slabs, lumber and other wood products.

(2) "Log deck" means a platform on which logs lay awaiting debarking or sawing.

(3) "Log haul" means a conveyor for transferring logs to the mill.

(4) "Log turner" means a device used to turn logs for head sawing.

(5) "Package" means a unit of lumber.

(6) "Personal protective equipment" means the apparel worn by the employee to protect his person from injury.

(7) "Pike pole" means a long pole whose end is shod with a sharp pointed spike.

(8) "Point of operation" means the area of a machine where material is actually worked.

(9) "Reeving" means to pass or thread a rope through a hole or block.

(10) "Resaw" means circular, band, or gang saw used to break down slabs or cants to boards.

(11) "Roll case" means a horizontal or inclined conveyor comprised of cylindrical rolls, which are sometimes powered, and which are used for the transfer of logs or lumber from 1 work station to another.

**R 408.15207 Definitions S.**
**Rule 5207.** (1) "Safety factor" means the ratio of the breaking strength of a piece of material or object to the actual safe load when in use.

(2) "Safety hook" means a hoisting hook with means to retain a hoisted object on the hook.

(3) "Saw guide" means a device for steadying a circular or band saw.

(4) "Sawmill carriage" means framework mounted on wheels which runs on tracks or in grooves in a direction parallel to the face of a saw and which contains apparatus to hold a log and advance it toward the saw.

(5) "Setworks" means a mechanism on a carriage used to move a log into position for another cut.

(6) "Splitter" means a knife-type, nonrotating spreader.

(7) "Spreader" means a wheel that separates a board from a log in back of a circular saw to prevent binding.

(8) "Sticker" means a strip of material used in stacking the separate courses of boards.

**R 408.15208 Definitions T.**

**Rule 5208.** (1) "Tailer" means an employee who stands opposite the feed end of a machine and removes the processed stock.

(2) "Telltales" means a device such as pieces of rope used to serve as a warning for overhead objects.

(3) "Top saw" means the upper of 2 circular saws on a head rig, both being on the same husk.

(4) "Transfer deck" means an area where boards are transferred from head saw or edger to the trim saw.

(5) "Trimmer saw" means a machine consisting of 2 or more circular saws used to cut boards to length.

**R 408.15209 Adoption of standards by reference; access to other MIOSHA rules.**

**Rule 5209.** (1) The following standards are adopted by reference in these rules and are available from Global Engineering Documents, 15 Inverness Way East, Englewood, Colorado, USA, 80112, telephone number: 1-800-854-7179 or via the internet at web-site: http://global.ihs.com; at a cost, as of the time of adoption of these rules, as stated in these rules:

(a) American National Standard Institute (ANSI) Standard ANSI A11.1 "Industrial Lighting," 1965 edition. Cost $153.00.

(b) ANSI Z21.30 "Installation of Gas Appliances and Gas Piping," 1964 edition. Cost: $90.00.

(2) The following standards are adopted by reference in these rules and are available from the National Fire Protection Association (NFPA), 1 Batterymarch Park, Quincy, Massachusetts, USA, 02169-7471, telephone number: 1-617-770-3000 or via the internet at website: www.nfpa.org; at a cost, as of the time of adoption of these rules, as stated in these rules:

(a) NFPA 91 "Blower and Exhaust Systems for Dust, Stock, and Vapor Removal or Conveying," 1961 edition. Cost $27.00.

(b) NFPA 302 "Fire Protection Standard for Pleasure and Commercial Motor Craft," 1968 edition. Cost $27.00.

(3) The standards adopted in subrules (1) and (2) of this rule, are also available for inspection at the Michigan Department of Licensing and Regulatory Affairs, MIOSHA Standards Section, 7150 Harris Drive, P.O. Box 30643, Lansing, Michigan, 48909-8143.

(4) Copies of the standards adopted in subrules (1) and (2) of this rule, may be obtained from the publisher or may also be obtained from the Michigan Department of Licensing and Regulatory Affairs, MIOSHA Standards Section, 7150 Harris Drive, P.O. Box 30643, Lansing, Michigan, 48909-8143, at the cost charged in this rule, plus $20.00 for shipping and handling.

(5) The following Michigan Occupational Safety and Health Standards are referenced in these rules. Up to 5 copies of these standards may be obtained at no charge from the Michigan Department of Licensing and Regulatory Affairs MIOSHA Standards Section, 7150 Harris Drive, P.O. Box 30643, Lansing, Michigan, 48909-8143 or via the internet at web-site: www.michigan.gov/mioshastandards. For quantities greater than 5, the cost, as of the time of adoption of these rules, is 4 cents per page.

(a) General Industry Safety Standard Part 2 "Floor and Wall Openings, Stairways, and Skylights," R 408.10201 to R 408.10241.

(b) General Industry Safety Standard Part 7 "Guards for Power Transmission," R 408.10701 to R 408.10765.

(c) General Industry Safety Standard Part 21 "Powered Industrial Trucks," R 408.12101 to R 408.12193.

(d) General Industry Safety Standard Part 27 "Woodworking Machinery," R 408.12701 to R 408.12799.

(e) General Industry Safety Standard Part 33 "Personal Protective Equipment," R 408.13301 to R 408.13398.

(f) Occupational Health Standard Part 301 "Air Contaminants for General Industry," R 325.51101 to R 325.51108.

(g) Occupational Health Standard Part 433 "Personal Protective Equipment," R 325.60001 to R 325.60013.

**R 408.15211 Employer responsibilities.**

**Rule 5211**. (1) An employer shall do all of the following:

(a) Provide training to each employee as to hazards and safe operation of the assigned job.

(b) Maintain machinery, equipment, buildings, ramps, platforms, and aisles in a hazard-free condition. When a hazardous condition develops concerning floors, docks, and passageways that cannot be immediately repaired, the area shall be guarded until adequate repairs are made.

(c) Provide head protection which shall be used by all employees outside the office, including those in the dry storage area, as prescribed in General Industry Safety Standard Part 33 "Personal Protective Equipment," as referenced in R 408.15209.

(d) Provide, and an employee shall use, eye protection as prescribed in General Industry Safety Standard Part 33 “Personal Protective Equipment,” as referenced in R 408.15209. If impact resistance is not required, the employee may wear a steel wire or nylon mesh screen, or equivalent, mounted on a protective helmet. The screen shall be of sufficient strength to protect the face to below the nose from chips or sawdust from the saw.

(e) Provide an approved life jacket to an employee working over water, at no expense to the employee.

(f) Install all gas piping and appliances as prescribed in ANSI standard Z21.30 “Installation of Gas Appliances and Gas Piping,” 1964 edition, as referenced in R 408.15209.

(2) Physical hazard color identification marking shall be in accordance with the following requirements:

(a) Red shall be the basic color for the identification of any of the following:

(i) Fire protection equipment and apparatus.

(ii) Danger, such as any of the following:

(A) Safety cans or other portable containers of flammable liquids having a flash point at or below 80ºF.

(B) Table containers of flammable liquids, open cup tester, excluding shipping containers, shall be painted red with some additional clearly visible identification either in the form of a yellow band around the can or the name of the contents conspicuously stenciled or painted on the can in yellow.

(C) Red lights shall be provided at barricades and at temporary obstructions.

(D) Danger signs shall be painted red.

(iii) Stop, shall apply to both of the following:

(A) Emergency stop bars on hazardous machines such as rubber mills, wire blocks, flat work ironers, and others, shall be red.

(B) Stop buttons or electrical switches where letters or other markings appear, and are used for emergency stopping of machinery shall be red.

(b) Yellow shall be the basic color for designating caution and for marking physical hazards for as any of the following:

(i) Striking against.

(ii) Stumbling.

(iii) Falling.

(iv) Tripping.

(v) "Caught in between."

**R 408.15212 Employees general duties.**

**Rule 5212.** An employee shall do all of the following:

(a) Abide by the safety procedures pertaining to the job as prescribed by the employer and comply with these rules.

(b) Examine the work area and equipment that is going to be used before work begins and report a dangerous or unsafe condition in the work area or equipment to the immediate supervisor.

(c) Refrain from reckless practice or action which could result in an accident or injury.

(d) Not operate a machine without prior training, instruction, and authorization.

**R 408.15212a Protective equipment.**

**Rule 5212a.** The use of chemicals shall be controlled so as to protect employees from harmful exposure to toxic materials. Where necessary, employees shall be provided with and required to wear protective equipment that will afford adequate protection against harmful exposure as required by General Industry Safety Standard Part 33 “Personal Protective Equipment,” and Occupational Health Part 433 “Personal Protective Equipment,” as referenced in R 408.15209.

**R 408.15213 Burners.**

**Rule 5213.** (1) If the burner stack is not self-supporting, it shall be guyed or otherwise supported.

(2) The conveyor runway to the burner shall be equipped with a standard handrail. If the runway crosses a roadway or thoroughfare, standard toeboards shall be provided in addition.

**R 408.15221 Illumination.**

**Rule 5221.** (1) Illumination shall be provided at the operator’s work station to maintain a minimum of 30 foot candle intensity, except at a debarker, head saw or trim saw. A minimum of 30 foot candle intensity shall be provided at the point of operation of a debarker, head saw or trim saw.

(2) Work areas under mills shall be as evenly surfaced as local conditions permit. Work areas under mills shall not have unnecessary obstructions and shall have lighting facilities in accordance with ANSI A11.1 “Industrial Lighting” 1965 edition, as adopted in R 408.15209.

(3) Log dumps, booms, ponds, or storage areas used at night shall be illuminated in accordance with the requirements of ANSI A11.1 “Industrial Lighting” 1965 edition, as adopted in R 408.15209

(4) An employer shall ensure that illumination is provided and designed to supply adequate general and local lighting to rooms, buildings, and work areas when in use.

(5) The adequacy and effectiveness of illumination shall be determined using all of the following factors:

(a) The quantity of light in foot-candle intensity is sufficient for the work being done.

(b) The quality of the light is free from glare, and has correct direction, diffusion, and distribution.

(c) Shadows and extreme contrasts are avoided or kept to a minimum.

(6) All stairways shall be adequately lighted as prescribed in subrules (4) and (5) of this rule.

(7) Fuel houses, bunkers, hoppers, and bins shall have adequate exits and lighting, and all necessary safety devices shall be provided. Persons entering fuel houses, bunkers, hoppers, and bins shall use the safety devices.

**R 408.15222 Floors, aisles, roadways, and docks.**

**Rule 5222.** (1) An aisle or floor work area shall be kept free of protruding objects, holes, and loose boards.

(2) A floor at the operator's station of a machine shall be maintained free of any slip or trip hazard.

(3) A floor shall be capable of sustaining the imposed load.

(4) An aisle, passageway, roadway, or dock shall be of such width as to provide for a safe passage of employees or vehicles, or both. A dock where powered industrial trucks are used shall be provided with a guard or bumper along its perimeter, except at loading or unloading points, to prevent overrun.

(5) A swinging door shall be provided with a window in each section. The window shall be of clear safety glass or equivalent material or protected against breakage.

(6) Where a doorway opens upon a railroad track or upon a tramway or dock over which vehicles travel, a barrier or other warning device shall be placed to prevent employees from stepping into moving traffic.

**R 408.15223 Power control.**

**Rule 5223.** (1) A machine shall be equipped with an emergency stop device, red in color, which can be activated from the operator's work station.

(2) A machine attended by more than 1 operator shall be equipped with a control for each operator exposed to a point of operation hazard. These controls shall be interlocked to prevent operation until each operator activates his control.

(3) A machine control shall be designed and installed to prevent unintentional activation by contact with objects or part of the body.

(4) A written lockout procedure shall be established by an employer and used by an employee. A power source of any equipment to be repaired, serviced or set up shall be locked out by each employee while doing work. Any residual pressure shall be relieved prior to and during work.

(5) Upon power failures, provisions shall be made to prevent machines from automatically restarting upon restoration of power.

**R 408.15224 Hydraulic safety.**

**Rule 5224.** (1) A hydraulic system shall have a designed safety factor of not less than 4.

(2) A hydraulic, air or steam line shall be bled before opening it for maintenance work.

(3) Equipment supported by hydraulic, air or steam pressure shall be blocked or otherwise secured before maintenance work is begun.

**R 408.15225 Chain, chain slings, and chain fittings.**

**Rule 5225.** (1) A chain and its component parts, other than alloy steel chain having a minimum tensile strength of 125,000 pounds per square inch, shall have a safety factor of not less than 5. Alloy chain shall not be used in excess of the working load in straight tension for its size as prescribed in table 1.

(2) A chain used in load-carrying service shall be inspected before initial use and weekly thereafter, Chain with bent, twisted, or elongated links or hook which has been open more than 15% at the throat from the original set or twisted more than 10% from the plane of the unbent hook shall not be used until the defective part is replaced.

(3) A bolt or nail shall not be used to shorten or join links together.

(4) Installation, inspection, maintenance, repair, and testing of chains shall be done only by an employee qualified to do such work.

(5) Proper storage shall be provided for slings while not in use.

(6) If, at any time any 3-foot length of chain is found to have stretched 1/3 the length of a link, it shall be discarded.

(7) Table 1 reads as follows:

| Table 1<br>Working load – Single chain | |
|---|---|
| **Nominal Size,<br>Chain Bar, In.** | **Work Load,<br>Lb. Max.** |
| 1/4 | 3,250 |
| 3/8 | 6,600 |
| 1/2 | 11,250 |
| 5/8 | 16,500 |
| 3/4 | 23,000 |
| 7/8 | 28,500 |
| 1 | 38,750 |
| 1 1/8 | 44,500 |
| 1 1/4 | 57,500 |
| 1 3/8 | 67,000 |
| 1 1/2 | 80,000 |
| 1 3/4 | 100,000 |

**R 408.15226 Cable, wire rope, and wire rope slings. Rule 5226.** (1) Cable, wire rope, and wire rope slings shall have a designed safety factor of not less than 5.

(2) Wire rope and cable in load-carrying or hoist service and their fittings shall be visually inspected when installed and once each day thereafter when in use.

(3) Wire rope shall not be used if, within a segment of 8 diameters in length, the total number of visible broken wires exceeds 10% of the total number of wires or if the rope shows other signs of excessive wear, corrosion, or defects.

(4) Wire rope and cable removed from service due to defects shall be plainly marked or identified as being unfit for further use on a crane, hoist, or other load-carrying device.

(5) When U-type cable clips are applied, they shall comply with figure 1.

(6) Cable clips shall be spaced approximately 6 rope diameters apart.

(7) Wire rope and cable shall be protected at sharp or tight bends by use of corner irons or blocks.

(8) A safety hook shall be used where there is a hazard created if the tension on the hook could be relieved by fouling or catching.

(9) Installation, inspection, maintenance, repair, and testing of ropes, cables, and slings shall be done only by persons qualified to do such work.

(10) Proper storage shall be provided for a sling while not in use.

(11) Connections, fittings, fastenings, and other parts used in connection with ropes and cables shall be of good quality and of proper size and strength and shall be installed in accordance with the manufacturer's recommendations.

(12) Hooks, shackles, rings, pad eyes, and other fittings that show excessive wear or that have been bent, twisted, or otherwise damaged shall be removed from service.

(13) Running lines of hoisting equipment located within 6 feet 6 inches of the ground or working level shall be boxed off or otherwise guarded or the operating area shall be restricted.

(14) There shall be not less than 2 full wraps of hoisting cable from slipping off.

(15) A drum shall have a flange at each end to prevent the cable from slipping off.

(16) A bottom sheave shall be protected by a closefitting guard to prevent the cable from jumping the sheave.

(17) The reeving of a rope shall be so arranged as to minimize the chafing or abrading while in use.

(18) Multiple-part lines shall not be twisted around each other. If there is a slack rope condition, the rope shall be properly seated on the drum and in the sheaves.

(19) Knots shall not be allowed in a wire rope.

(20) Figure 1 reads as follows:

**FIGURE 1**

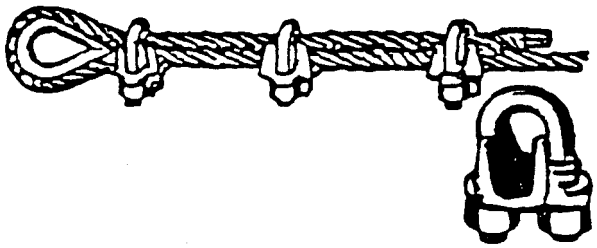

NOTE: There is only one correct method of installing wire rope clips. They should be attached to rope ends as shown in photograph above. The base of each clip should bear against the live, or long rope end, and the U-bolt should bear against the dead or short rope end.

**NUMBER AND SPACING OF CLIPS FOR ROPES OF VARIOUS SIZES**

| Diameter of rope (in.) | Number of clips | Center-to-center space between clips (in.) | Length of rope turned back exclusive of eye (in.) |
|---|---|---|---|
| 1/4 | 2 | 1 1/2 | 3 |
| 5/16 | 2 | 1 7/8 | 4 |
| 3/8 | 2 | 2 1/4 | 5 |
| 7/16 | 2 | 2 5/8 | 6 |
| 1/2 | 3 | 3 | 9 |
| 5/8 | 3 | 3 3/4 | 12 |
| 3/4 | 4 | 4 1/2 | 18 |
| 7/8 | 4 | 5 1/4 | 21 |
| 1 | 4 | 6 | 24 |
| 1 1/8 | 5 | 6 3/4 | 34 |
| 1 1/4 | 5 | 7 1/2 | 38 |
| 1 3/8 | 6 | 8 1/4 | 50 |
| 1 1/2 | 6 | 9 | 54 |
| 1 5/8 | 6 | 9 3/4 | 60 |
| 1 3/4 | 7 | 10 1/2 | 74 |
| 1 7/8 | 8 | 11 1/4 | 90 |
| 2 | 8 | 12 | 96 |
| 2 1/8 | 8 | 13 | 104 |
| 2 1/4 | 8 | 14 | 112 |

**R 408.15227 Housekeeping.**
**Rule 5227.** (1) Chips, sawdust and other debris shall be removed from working areas to prevent an accumulation which would constitute a hazard.

(2) Pipes, beams, and other overhead objects in the operating area of a sawmill shall be cleaned off a minimum of once a month to remove dust accumulations.

**R 408.15228 Pressure feed rolls.**
**Rule 5228.** Pressure feed rolls shall be guarded to prevent the hands of an operator when at his regular work station from coming in contact with the in-running rolls. A guard shall be made of a minimum of 14 gauge sheet metal or material or equivalent or greater strength.

**R 408.15229 Bins, bunkers, hoppers and fuel houses.**
**Rule 5229.** (1) An open bin, bunker, or hopper extending less than 36 inches above the working level shall be provided with a standard barrier as prescribed in General Industry Safety Standard Part 2 "Floor and Wall Openings, Stairways and Skylights," as referenced in R 408.15209. or the opening shall be covered with a grating with openings small enough to prevent an employee from falling through.

(2) Where wheeled equipment is used to move materials to a bin, bunker or hopper, a bumper stop shall be provided where the bin, bunker or hopper is at floor level. An employee shall be protected from the open side by a standard barrier installed along each side of the wheeled equipment runway.

**R 408.15230 Fiber rope.**
**Rule 5230.** (1) Frozen fiber rope shall not be used in load carrying service.

(2) Fiber rope that has been subjected to acid or excessive heat shall not be used for load carrying purposes.

(3) Fiber rope shall be protected from abrasion by padding where it is fastened or drawn over square corners or sharp or rough surfaces.

## SPECIFIC EQUIPMENT

**R 408.15231 Chippers and hogs.**
**Rule 5231**. (1) A whole log chipper or a hog shall have the feed system arranged so that an employee does not stand in direct line with the chipper hopper.

(2) A guard shall be installed over the chipping or hog throat to prevent slab and wood particles from being discharged at an operator.

(3) To prevent an employee from falling onto a chipper or hog belt-type, feed-in conveyor, the belt-type conveyor shall be guarded for the entire length of the conveyor by an enclosure or standard barrier as prescribed in General Industry Safety Standard Part 2 "Floor and Wall Openings, Stairways, and Skylights," as referenced in R 408.15209.

(4) A safety belt and lanyard shall be used by an employee when feeding at or near the hopper of a drop feed chipper or drop feed hog. The lanyard shall be adjusted to prevent an employee from falling into the chipper or hog.

(5) A board chipper or hog shall have the feed spout enclosed not less than 40 inches from the blade to the opening or the operator shall wear a safety belt and lanyard. The lanyard shall be short enough to prevent any portion of the operator's body from touching the blade.

(6) Where jam-ups cannot be cleared with a stick, the in-feed equipment shall be stopped and locked out and the employee clearing the jam shall be provided with, and use, a safety belt and lanyard, as prescribed in General Industry Safety Standard Part 33 "Personal Protective Equipment," as referenced in R 408.15209, which is adjusted to prevent contact with the chipper blade before additional cleaning is done.

(7) A chipper on a head rig or edger shall be enclosed to protect the employee.

**R 408.15232 Log deck.**
**Rule 5232.** (1) A log deck shall be provided with a stop or other safeguard to prevent logs from inadvertently advancing onto the carriage of its runway.

(2) A barricade or other positive stop of such strength to hold back a log shall be erected between a log deck and a head sawyer.

(3) Drag, swing, circular cutoff saws, and spiked rolls shall be so located and guarded to allow access to and from the building without endangering passing employees.

(4) Loose chain from overhead equipment shall not hang over the log deck so as to be struck by an employee.

(5) Logs shall be arranged in manner to prevent their accidental falling or rolling from the deck.

(6) Overhead protection shall be provided for an employee working below logs being moved to the log deck.

**R 408.15233 Debarkers.**
**Rule 5233.** (1) A debarker shall be guarded by an enclosure or by location so as to protect an employee from flying bark and other debris. The enclosure shall have a window between the operator and debarker of 3/8-inch plexiglass or material of equivalent or greater strength.

(2) Hold-down rolls shall be used at the in-feed and out-feed sections of mechanical ring debarkers to control the movement of a log.

(3) Where an elevating ramp or gate is used, a means such as a chain or blocking shall be used to insure its suspension when an employee is required to work under it.

(4) A bumper pillar or post of adequate strength to contain a log when passing through a stationary debarker head shall be in place.

**R 408.15234 Sawmill carriages.**

**Rule 5234.** (1) A stop or bumper with a shock-absorptive qualities shall be installed at the ends of a carriage runway to prevent its leaving the track limits.

(2) Dogs shall hold a log, cant, or board in such manner that the log, cant, or board cannot escape from the carriage. Safeguards shall be installed to insure that if the electrical power fails, the pressure of the dog on the log will not release a log until the headsaw has stopped.

(3) A carriage track sweeping device shall be used to keep track rails clear of debris.

(4) A barrier shall be provided to prevent the entry of employees in the carriage travel area during sawing operations.

(5) When a sawyer leaves the operating station, the carriage controls shall be placed and held in the off position by a mechanical device.

(6) When a powered carriage is returned to the end of the runway for maintenance work, a device shall be provided to prevent movement of the carriage.

(7) A means of egress shall be provided from the operator's station.

**R 408.15241 Head band saws and band resaws.**

**Rule 5241.** (1) A head band saw and band resaw shall not be operated at a speed in excess of the manufacturer's rating. The rating shall be permanently marked on the wheel.

(2) A band saw blade shall not be used if it has a crack greater than 1/10 of the blade width.

(3) A head band saw and band resaw shall be inspected monthly for defects which would affect their safe operation. A head band saw and band resaw shall not be used if a wheel has a loose hub, loose spokes, or a cracked rim. A head band saw and a band resaw shall have both wheels enclosed, except for the portion where the blade leaves and returns to the wheel. Materials used to enclose the wheels shall be not less than 14-gauge sheet metal or material of equivalent or greater strength.

(4) A head band saw shall be provided with a saw catcher constructed to catch a runaway blade.

(5) An operator work station for a head band saw shall have an enclosure on not less than 3 sides, not including the back, to protect the operator from flying debris. Above this enclosure there shall be a piece of 3/8-inch plexiglass or material of equivalent or greater strength and of such height between the sawyer and the saw blade to protect the sawyer from flying objects.

**R 408.15242 Circular head saw.**

**Rule 5242.** (1) A circular headsaw shall not be operated at a speed in excess of the manufacturer's rating, which shall be etched on the blade. A circular headsaw shall be equipped with guides to prevent blade wobble.

(2) Horizontal distance from a circular headsaw blade to the nearest vertical husk part shall be at least 1 inch greater than the distance from the blade collar to the tip of the blade.

(3) Behind a circular head saw blade, the saw shall be equipped with a spreader wheel or a splitter.

(4) A splitter shall be constructed of tempered steel or its equivalent and shall not be thinner than the saw kerf.

(5) The work station of an off-bearer shall be constructed to prevent the off-bearer from working closer than 42 inches from the saw blade.

(6) The work station of the operator of a circular saw shall be enclosed as prescribed in R 408.15241(5).

(7) If a circular headsaw has setworks that are manually operated or a carriage that is manually loaded, both of the following provisions shall be complied with:

(a) A barricade or other positive stop of such strength to hold back a log shall be erected between the log deck and the sawyer.

(b) The guard required at the sawyer station shall be a shield which is 36 inches high and which is between the operator and the saw with an extension of 3/8-inch plexiglass or material of equivalent strength of such height and width to protect the sawyer from flying objects.

**R 408.15243 Double circular head saw.**

**Rule 5243.** A double circular head saw shall comply with R 408.15242 and in addition, have a movable guard or hood made of a minimum of 14 gauge sheet metal or material of equivalent or greater strength over the upper blade.

**R 408.15244 Self-feed circular gang saws.**

**Rule 5244.** (1) A bank of circular gang saws and their feed rolls, if so equipped, shall be enclosed by a cover over the top, front, and open ends, except where guarded by location. A drive mechanism to feed rolls shall be enclosed. The cover shall be made of a minimum of 14 gauge sheet metal, or material of equivalent or greater strength, and the bottom of the cover shall come within 3/8 inch of the plane formed by the bottom of the working surfaces of the feed rolls.

(2) A circular gang saw shall be equipped with an anti-kickback device. A circular gang saw shall be equipped with a live roll or other tailing device on the off side or shall be provided with a splitter as prescribed in R 408.15242(4).

(3) The carriage cradle of a whole log sash gang saw shall be of such height as to prevent a log from kicking out while being loaded.

**R 408.15245 Trimmer saw.**

**Rule 5245**. (1) A trimmer saw shall be guarded by a barrier made of 11 gauge metal, or material of equivalent or greater strength, to contain the trimmings flying from point of operation and to prevent an employee from coming in contact with any saw blade on the trimmer. The barrier shall be securely bolted to a substantial frame. This guard for a series of saws shall be set as close to the top of the trimmer table as practical.

(2) An automatic trimmer saw shall be provided with a safety stop or hanger to prevent saws from dropping on the table.

(3) The rear of a trimmer saw shall have a guard the full width of the saws and as much wider as practical.

(4) A trimmer saw shall not be run at peripheral speeds in excess of those recommended by the manufacturer.

**R 408.15246 Edger saws.**

**Rule 5246.** (1) An edger shall not be located in the main roll case behind the headsaw. Edger saw blades shall be guarded against unintentional contact.

(2) A control device shall be installed and located so that the operator can stop the pressure feed rolls without releasing their tension.

(3) An edger shall be equipped with both of the following:

(a) Anti-kickback fingers designed to provide holding power for all thicknesses of material being cut.

(b) Live rolls or other tailing device on the off side of the headsaw, which is so guarded that an employee cannot contact any part of the edger saw from his or her work station.

**R 408.15247 Bolt, cant, or slat saw.**

**Rule 5247.** (1) A bolt, cant, or slat saw shall have the point of operation guarded or the work stations of the tailer and operation shall be constructed to prevent the tailer or operator from working closer than 42 inches from the saw blade.

(2) A feeding mechanism, such as powered live rolls or carriage, shall be used to feed materials through a bolt, cant, or slat saw.

(3) Behind a bolt, cant, or slat saw blade, the saw shall be equipped with a spreader wheel or a splitter.

(4) The blade of a bolt, cant, or slat saw shall be guarded to cover the top and both sides. Hangdown deflectors of 3/8-inch plexiglass or equivalent protection shall be installed on the in-feed end and extend to the top of the saw blade. See figure 2.

(5) Figure 2 reads as follows:

**Figure 2**
**Blade Guard (Bolt, cant, or slat saw)**

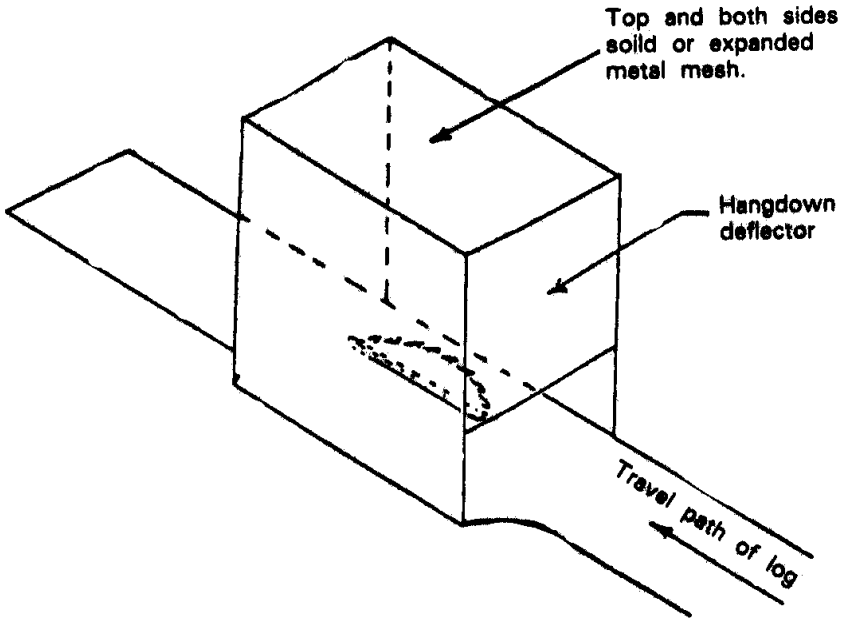


**R 408.15251 Woodworking machines.**

**Rule 5251.** An employer using machines and equipment more commonly found in a woodworking shop, including but not limited to, jointers, planers, mitre saws and swing cutoff saws, shall follow the General Industry Safety Standard Part 27 “Woodworking Machinery,” as referenced in R 408.15209.

**R 408.15252 Kilns.**

**Rule 5252.** (1) A kiln door shall have a device to hold it open during a loading or unloading cycle. A counterweight for the kiln door shall be guarded as prescribed in General Industry Safety Standard Part 7 “Guards and Power Transmission,” as referenced in R 408.15209. Installation of a kiln door shall be such that it will not topple if it becomes disengaged from the carriers or hangers.

(2) If procedures require access to a kiln, then either of the following applies:

(a) The kiln shall be provided with an escape hatch that opens from the inside, swings with the direction of travel, and is located in or near the main kiln door.

(b) A passageway shall be provided on not less than 1 side or in the center of an end piled kiln, or on 2 sides of a cross piled kiln.

(3) A steam line less than 7 feet from the floor and in or by a walkway shall be covered with an insulating material or protected by a barrier.

(4) A kiln car shall be blocked by chocks to prevent unintentional movement.

(5) A kiln shall be constructed on a foundation capable of preventing the sagging of the racks.

(6) Where a pit is provided, it shall be ventilated, drained, and lighted and large enough to give the operator safe working space with operating devices such as valves, dampers, damper rods, and traps.

(7) A warm room shall be provided for kiln employees to stay in during cold weather after leaving a hot kiln.

**R 408.15253 Storage and transfer of lumber.**

**Rule 5253.** (1) Lumber shall be stacked on foundations constructed to support the maximum load without sinking, sagging or permitting the pile to topple. A pile of lumber which is not stable shall be restacked at once or the area guarded by a barrier.

(2) Long packages of lumber shall not be placed on short packages except where a stable pile can be made by use of package separators.

(3) Where necessary to insure stability, a package of lumber shall be provided stickers. A sticker shall extend to within 2 inches, plus or minus, of the full width of the package. Stickers shall be aligned 1 above the other.

(4) A load of lumber shall be built and secured to insure stability during transit.

**R 408.15254 Stackers and unstackers.**

**Rule 5254**. (1) A stacker or unstacker shall be blocked whenever an employee goes beneath the hoisting platform.

(2) The lifting device on a stacker or unstacker shall be constructed or equipped with safety devices to minimize the potential of lumber falling.

(3) Guarding of a stacker hoistway openings and lower landing shall be pursuant to General Industry Safety Standard Part 2 “Floor and Wall Openings, Stairways and Skylights,” as referenced in R 408.15209.

(4) Where an operator has no clear view of the discharge path from a stacker, or in case of a discharge path of an automatic stacker, a barrier guard shall be provided to prevent an employee from entering the discharge path. In either case, a warning device shall be installed to alert an employee of the hazard.

**R 408.15256 Cleaning pits.**

**Rule 5256.** An employer shall provide safe means of entrance and exit to permit cleaning of pits.

## PALLET EQUIPMENT

**R 408.15261 Nailers.**

**Rule 5261.** (1) A hand held, power operated nailer or stapler shall be equipped and maintained with a safety switch at the point of operation as well as a finger control switch.

(2) A automatic nailer or stapler shall have the point of operation guarded or enclosed to within 1/4 inch of the material.

(3) Where a nailer or stapler has more than 1 operator, each operator shall be supplied with a control which shall be activated concurrently or the machine will not operate.

(4) A foot control shall be provided with a cover or guard to prevent accidental activation. The construction of the cover or guard shall be as prescribed in rule 2351 of the occupational safety standards commission standard, Part 23. Power Presses, being R 408.12351 of the Michigan Administrative Code.

**R 408.15262 Pallet notchers.**

**Rule 5262.** A pallet notcher shall be equipped with a hood designed to contain flying pieces and chips and controls to prevent the hands of the operator from entering the point of operation. A method of feeding shall be provided to prevent kickbacks.

## LOG AND MATERIAL HANDLING AND STORAGE

**R 408.15271 Hauling trucks, egress and pickup points.**

**Rule 5271.** (1) A truck used to haul lumber or logs shall have a bulkhead extending to the top of the operator’s compartment and capable of containing the movement of the load caused by a sudden stop.

(2) Stakes, stake pockets, binders and tighteners shall be provided on the truck to secure the load against movement. Where rollers are provided, not less than 2 shall be equipped with locks which shall be locked during transit.

(3) An area of restricted width or height shall be posted with a warning sign.

(4) Where accurate spotting is required to load and unload packages of lumber, those points shall be marked and wheel stop provided.

**R 408.15272 Securing of truck loads.**

**Rule 5272.** (1) A trip stake shall be released from the side of the truck or trailer opposite the location of the trip stake.

(2) When the entire load of logs are unloaded by a device or sling from a truck or trailer, in a single operation, the following shall apply:

(a) A binder shall not be released until the unloading lines or other unloading device secures the load.

(b) Binders shall be released only from the side on which the unloader operates, except when released by remote control devices or except when the person making the release is protected by racks or stanchions or other equivalent means.

(c) When a binder is fouled by the unloader, the load shall be secured by an extra binder of equivalent strength or otherwise secured until the fouled binder is removed.

**R 408.15273 Log and material handling equipment.**

**Rule 5273.** (1) Equipment used for handling logs and material shall be equipped with a braking system capable of holding the imposed load of equipment and material.

(2) A hydraulic system of log and material handling equipment shall be equipped with a valve capable of preventing uncontrolled descent of the load in case of failure of the system.

(3) Log and material handling equipment shall be equipped with a limit switch to prevent over-travel of the lift arms if the control device is not released in time.

(4) When a forklift-type handling machine is used, a means shall be used to secure a loading attachment to the forks.

(5) Where log and material handling mobile equipment lifts the load higher than the operator's head, overhead protection shall be provided not less than equivalent to that prescribed in General Industry Safety Standard Part 21 "Powered Industrial Trucks," as referenced in R 408.15209.

(6) Mobile log and material handling mobile equipment shall be equipped with head and rear running lights when used during periods of darkness.

(7) Unloading devices shall have their movements coordinated by audible or hand signals when the operator's vision is obstructed or when operating near another employee.

(8) Wood pike poles shall be straight-grained, select material. Defective or blunt poles shall not be used. A handle for a pike pole used near conductors shall be of an insulating type material.

(9) An ungrounded electrically powered hoist operated by a handheld remote control at grounded locations, such as a log dump or a mill log lift, shall be actuated by not more than 50 volts to ground.

(10) Where the operator is exposed to a hazard from backing a vehicle into objects, an approved platform guard shall be provided and so arranged as to not impede the exiting of the driver from the vehicle.

(11) All vehicles shall be equipped with audible warning signals and backup alarm and, where practicable, shall have spark arrestors.

(12) Carriers shall be designed and constructed so that the operator's field of vision is not unnecessarily restricted. Carriers shall be provided with an access ladder or equivalent.

(13) Railroad tracks and other hazardous crossings shall be plainly posted.

(14) Periodic inspection of cable or dogging lines shall be made to determine when repair or removal from service is necessary.

(15) A vehicle shall not be operated with a load exceeding its safe load capacity.

**R 408.15274 Log unloading and storage general.**

**Rule 5274.** (1) A log unloading area and road beds will be arranged and maintained to allow a safe operation.

(2) Signs prohibited unauthorized foot traffic shall be posted in the log unloading and storage area.

(3) A brow log or equivalent shall be provided at a water log dump to prevent overrun of mobile equipment.

(4) Where skids are used, space adequate to clear an employee's body shall be maintained between the top of the skids and the ground.

**R 408.15275 Water log dumps.**

**Rule 5275.** (1) Ungrounded electrically powered hoists using handheld remote control in grounded locations, such as log dumps or mill log lifts, shall be actuated by circuits operating at less than 50 volts to ground.

(2) Roadbeds at log dumps shall be of sufficient width and evenness to ensure safe operation of equipment.

(3) An adequate brow log or skid timbers or the equivalent shall be provided where necessary. Railroad-type dumps, when located where logs are dumped directly into water or where entire loads are lifted from a vehicle, may be exempted providing such practice does not create a hazardous exposure of personnel or equipment.

(4) Unloading lines shall be arranged so that it is not necessary for the employees to attach them from the pond or dump side of the load except when entire loads are lifted from the log-transporting vehicle.

(5) Unloading lines, crotch lines, or equally effective means shall be arranged and used in a manner to minimize the possibility of any log from swinging or rolling back.

(6) When logs are unloaded with peavys or similar manual methods, means shall be provided and used that will minimize the danger from rolling or swinging logs.

(7) Guardrails, walkways, and standard handrails shall be installed as prescribed in General Industry Safety Standard Part 2 "Floor and Wall Openings, Stairways, and Skylights," as referenced in R 408.15209.

(8) An employer shall provide approved life rings with line attached and maintained to retain buoyancy.

**R 408.15276 Dry deck storage.**

**Rule 5276.** (1) A dry deck storage area shall be maintained in a condition to allow safe operation of mobile equipment.

(2) Logs shall be stored in a safe and orderly manner. Logs shall be piled in the yard and arranged on the deck in a manner to prevent rolling.

(3) Roadways shall be maintained at such width that log and material handling equipment can move without creating a hazard to employees.

**R 408.15280 Air requirements.**

**Rule 5280**. (1) Ventilation shall be provided to supply adequate fresh healthful air to rooms, buildings, and work areas.

(2) Employees shall not be exposed to airborne concentration of toxic dusts, fumes, vapors, mists, or gases that exceed the threshold limit values in Occupational Health Standard Part 301 "Air Contaminants for General Industry," as referenced in R 408.15209.

**R 408.15282 Blower, collecting, and exhaust systems.**

**Rule 5282.** (1) Blower, collecting, and exhaust systems shall be designed, constructed, and maintained in accordance with NFPA 91 "Blower and Exhaust Systems for Dust, Stock, and Vapor Removal or Conveying," 1961 edition, as adopted in R 408.15209.

(2) All mills containing 1 or more machines that create dust, shavings, chips, or slivers during a period of time equal to or greater than 1/4 of the working day, shall be equipped with a collecting system. The collection system may be either continuous or automatic, and shall be of sufficient strength and capacity to enable it to remove such refuse from points of operation and immediate vicinities of machines and work areas.

(3) Each woodworking machine that creates dust, shavings, chips, or slivers shall be equipped with an exhaust or conveyor system located and adjusted to remove the maximum amount of refuse from the point of operation and immediate vicinity.

(4) Exhaust pipes shall not discharge into an unconfined outside pile if uncontrolled fire or explosion hazards are created. The exhaust pipes may empty into settling or dust chambers designed to prevent the dust or refuse from entering any work area. The chambers shall be constructed and operated to minimize the danger of fire or dust explosion.

**R 408.15284 Pond boats and rafts.**

**Rule 5284**. (1) Pond boats and rafts shall comply with the provisions of NFPA 302 "Fire Protection Standard for Pleasure and Commercial Motor Craft," 1968 edition, as adopted in R 408.15209.

(2) Decks of pond boats shall be covered with nonslip material.

(3) Powered pond boats or rafts shall be provided with at least 1 approved fire extinguisher, and 1 life ring with line attached.

(4) Boat fuel shall be transported and stored in approved safety containers such as Underwriters' Laboratories, Inc..

(5) An employer shall provide inspection, maintenance, and ventilation of the bilge area to prevent accumulation of highly combustible materials.

(6) An employer shall provide adequate ventilation for the cabin area on enclosed cabin-type boats to prevent accumulation of harmful gases or vapors.

**Rule 3406 Rescinded**

**Rule 3505 Rescinded.**

**Rule 5005 Rescinded**

LICENSING AND REGULATORY AFFAIRS
CUSTOMER DRIVEN. BUSINESS MINDED.

Michigan Occupational Safety and Health Administration
PO Box 30643
Lansing, Michigan 48909-8143
Ph: 517-284-7740

The Department of Licensing and Regulatory Affairs will not discriminate against any individual or group because of race, sex, religion, age, national origin, color, marital status, disability, or political beliefs. Auxiliary aids, services and other reasonable accommodations are available upon request to individuals with disabilities.