Aggressive Use of Rumble Strips

Mar 2, 2005

Dave Morena
FHWA Michigan Division

Time Management

- Rumble Design 1 min
- Shoulder Rumble
  - freeway 2 min
  - non-freeway 3 min
- Centerline rumbles 5 min
- Rumbles in driving lane 3 min

Milled Rumbles are the Most Effective

Rolled-In Rumbles (1980+)

Some noise,
No vibration

Concrete Intermittent Rumbles 1980+

Some noise,
No vibration

Why do milled work better than rolled?

Tire drops approx 10 times deeper into the milled strip

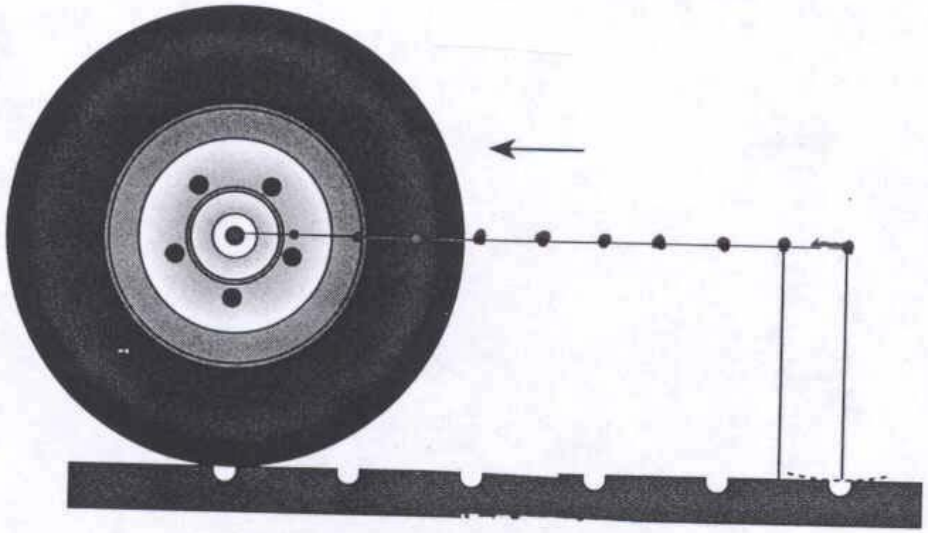

TIRE DROP

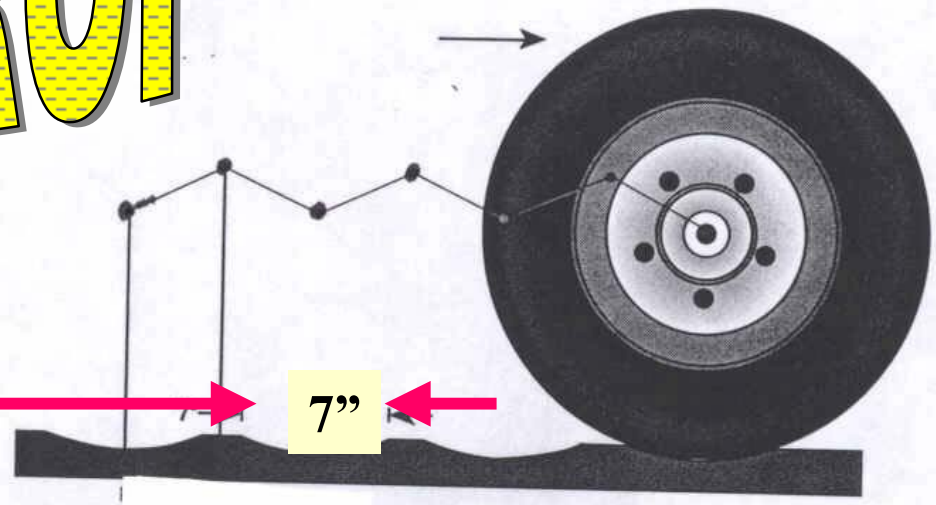

Proper depth = ½ to 5/8”
7 inches across gap

Milled Rumbles

1995+

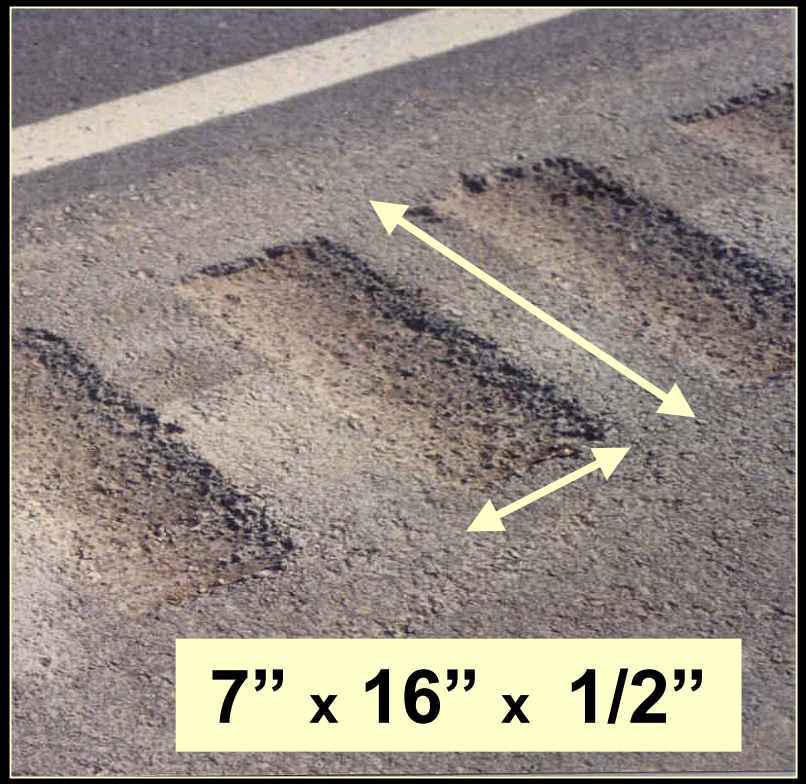

Noise AND vibration

Compare Milled vs Rolled:

Tire drops easily into milled rumble, but not into rolled rumble

Shoulder Rumbles - Freeway

Put rumbles close to driving lane

Colorado DOT - 1100 miles

zero offset since 1998

States with close offset on freeway shoulders:

4” or less offset:

- Alaska (2”Lt, 6”Rt)
- Arizona (zero offset)
- Colorado (zero offset)
- Montana (4 -6”)
- Nevada (0 -6”)
- New Jersey (4”)
- New York (4” Rt)
- Pennsylvania (4” Rt)
- Texas (4 –8”)
- Wyoming (4” LT)

6” offset:

- Connecticut (LT)
- Iowa **
- Kansas
- Michigan **
- Vermont (LT)
- Virginia
- Washington

** 2004

Accommodating Residents:
Mill Pattern and Placement

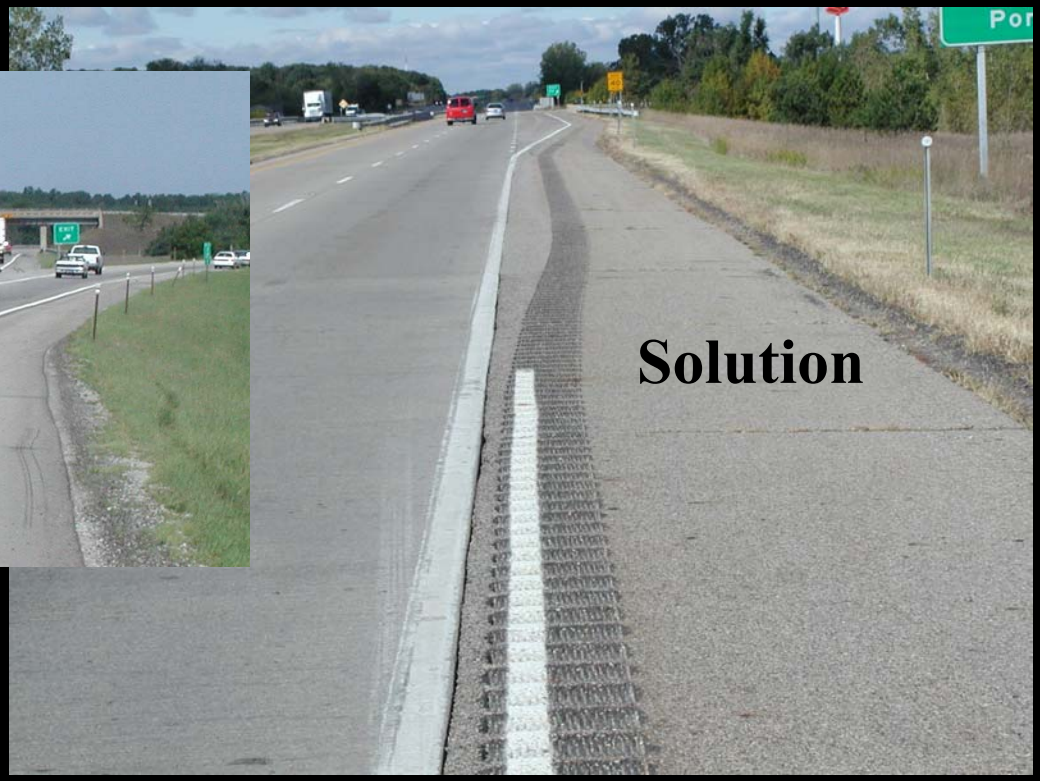

MI - widens the offset at beginning of exit ramp

Shoulder Rumbles - Non-Freeways

What's the major problem here?

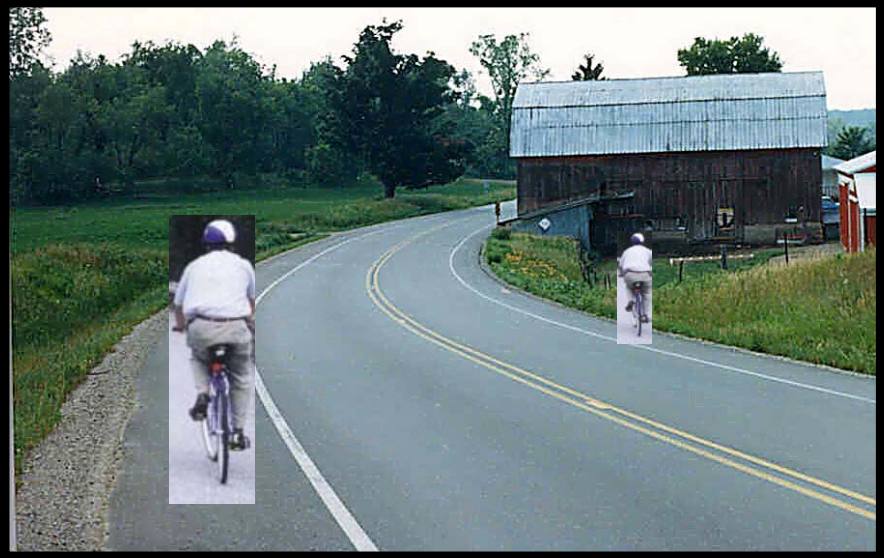

Accommodating Bicycles: Mill Gaps to Allow Bike Flow

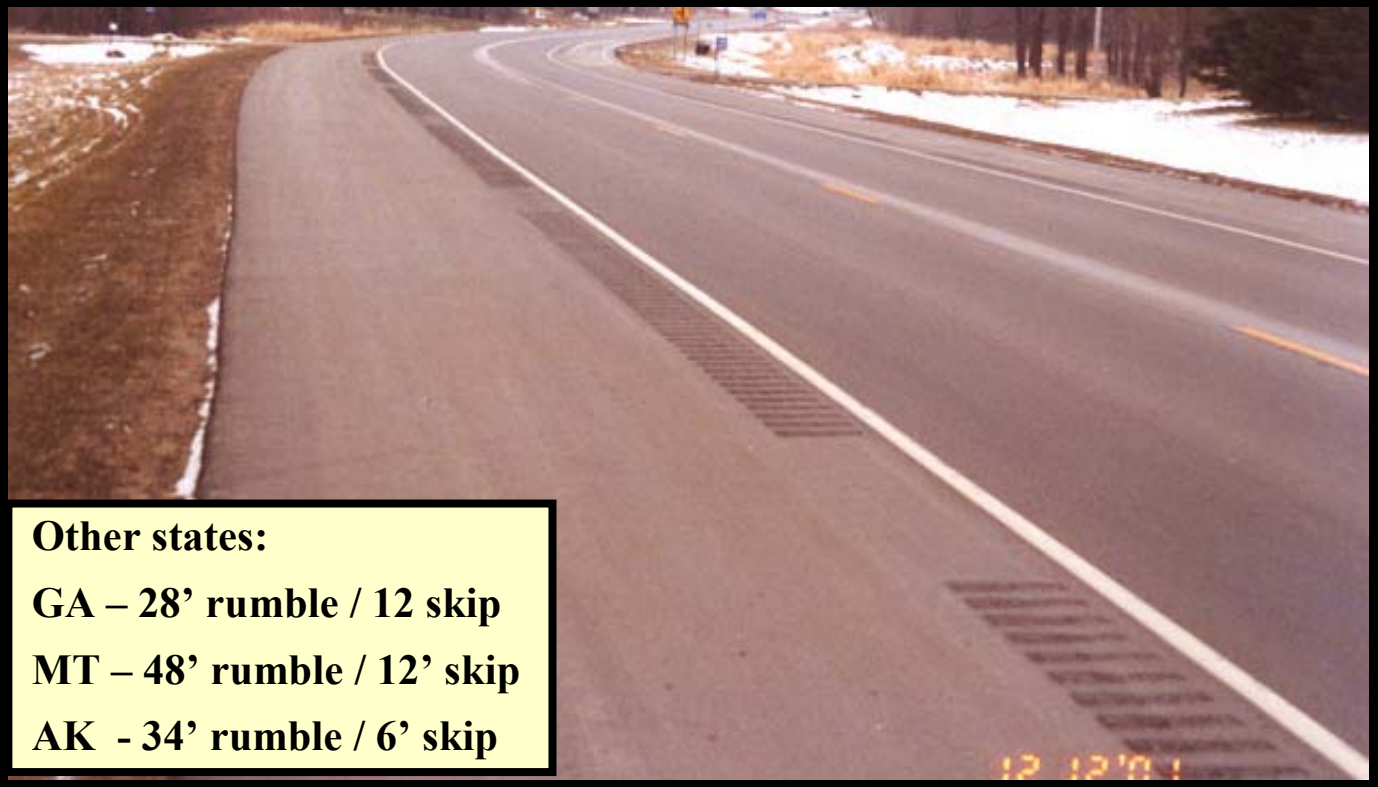

Minnesota – 48’ rumble, 12’ skip

Accommodating Bicycles:
minimum shoulder requirement

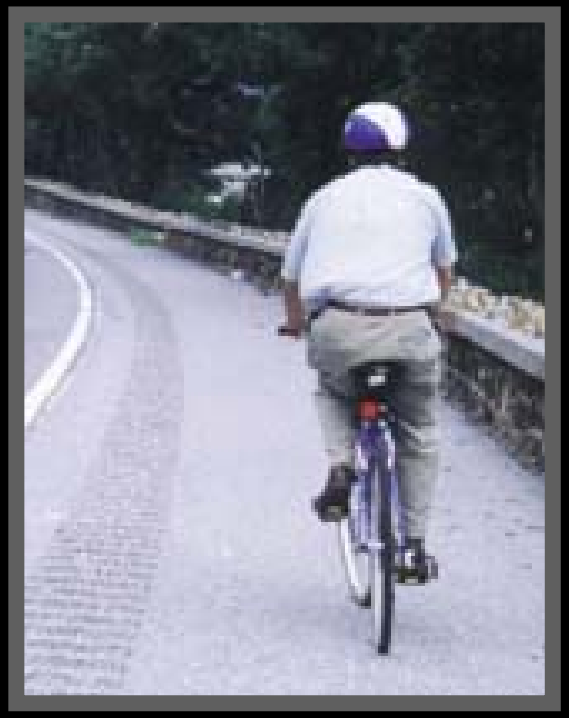

Many state DOTs require minimum paved shoulder width:

- MN - 6’ shldr, 50 mph, rural
- GA - 4’ shldr, 50 mph, 400 ADT
- MT - 4’ shldr
- PA - 6’ shldr (bicycle tolerable)
- KS - 8’ shldr

There are some states that will place rumbles on narrow shoulder

Iowa – no minimum shldr width

Mississippi - 1100 lane miles

Accommodating Bicycles:
reduced depth of cut

PA - Bicycle Tolerable Rumble Strips

100 locations, approx 150 miles

Accommodating Bicycles:
reduced depth of cut

Standard cut:
7” x 16” on 12” cycle
depth ½”

Bicycle Tolerable cut:
5” x 16” on 7” cycle
depth 3/8”

PA - Bicycle Tolerable Rumble Strips

Accommodating Residents:
Mill Pattern and Placement

Balancing safety vs practicality:

Many states gap out the rumbles at driveways

Accommodating Residents:
Mill Pattern and Placement

Pictures to be provided by Kurt Smith

AK – gaps provided at multiple mailboxes, intersections

Shoulder Rumbles – non-freeway

<u>Coming soon</u>:

Georgia DOT: 510 road miles in 2005

Centerline Rumbles

Centerline Rumbles
a Growth Industry

2000 survey

- 20 states (7 no pass only)
- 1 CA province (no pass)
- 100-200 miles
- top 5 states - 100 miles total

* Noyce & Elango

2003 survey

- 22 states
- 2 CA province
- approx 1100 miles
- top 5 states - 850 miles total

* Kansas State Univ

Centerline Rumbles

<u>PennDOT Policy</u>

Consider Centerline rumbles on all roads >1500 ADT

Pennsylvania DOT

250 locations, approx 1500 miles

Centerline Rumbles

Minnesota DOT

300 miles

Centerline Rumbles

National Safety Award Winner 2001

Crossover crashes ↓ 60%

Delaware - US Rte 301

3 miles, installed 1995

Centerline Rumbles

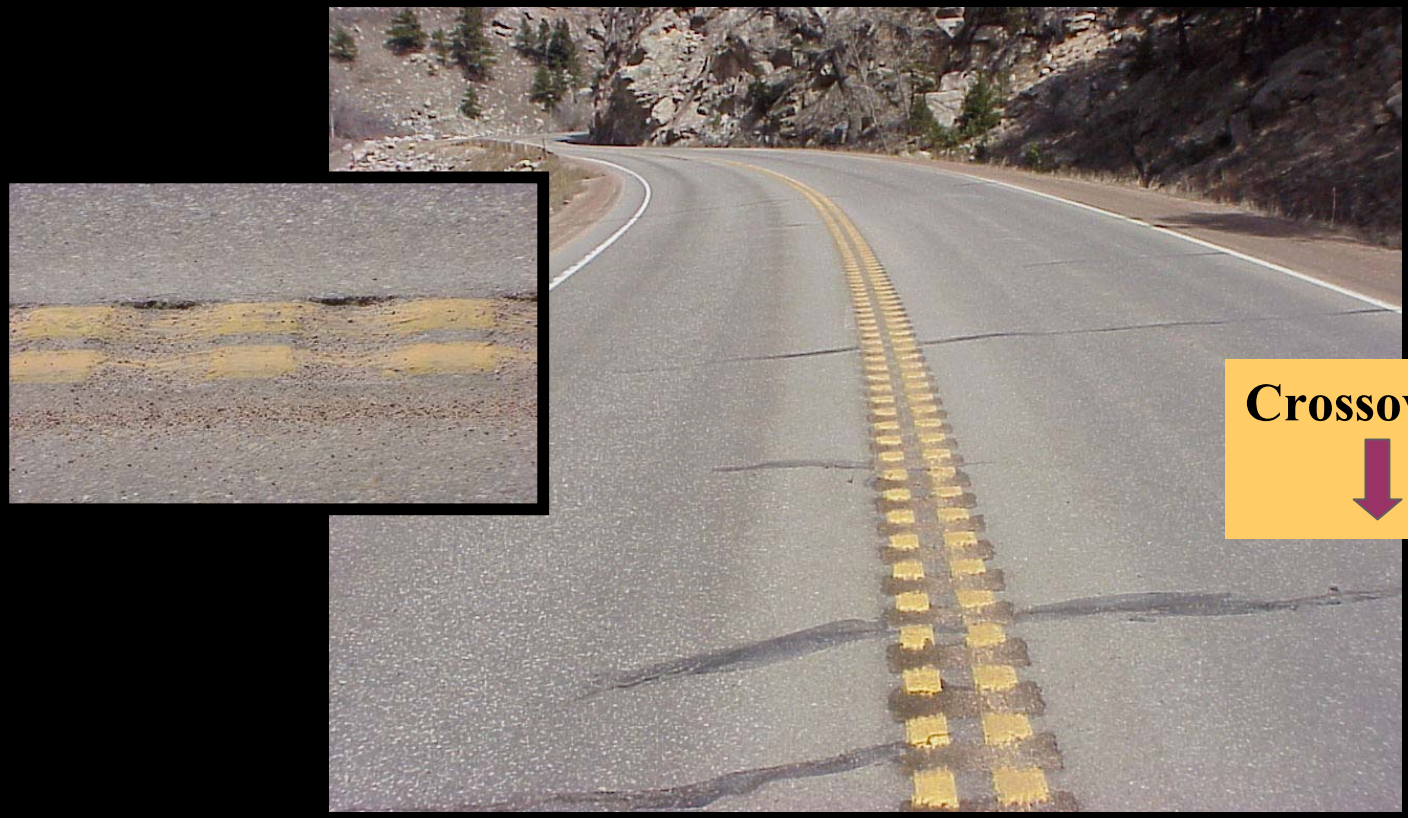

Crossover crashes

24%

Colorado – State Highway 119

17 miles, installed 1996

Centerline Rumbles

Total crashes ↓ 26%

Injury crashes ↓ 56%

Kentucky – Daniel Boone Parkway

17 miles, installed 2001

Centerline Rumbles

National Research 2003:

Centerline rumbles on rural 2-lane:

- 7 states
- 98 sites
- 210 miles

Richard Retting
Insurance Institute of Highway Safety

Total crashes ⬇ 21%

Crossover injury crashes ⬇ 25%

Who else is a player in centerline rumbles?

- Arkansas – 75 miles in 2005
-

Centerline Rumbles

Coming soon:

Washington DOT: 1000 miles in 2005-06
(30 miles as of 2004)

Georgia DOT: 150 miles in 2005

Center & Shoulder Rumbles

Centerline & Shoulder Rumbles

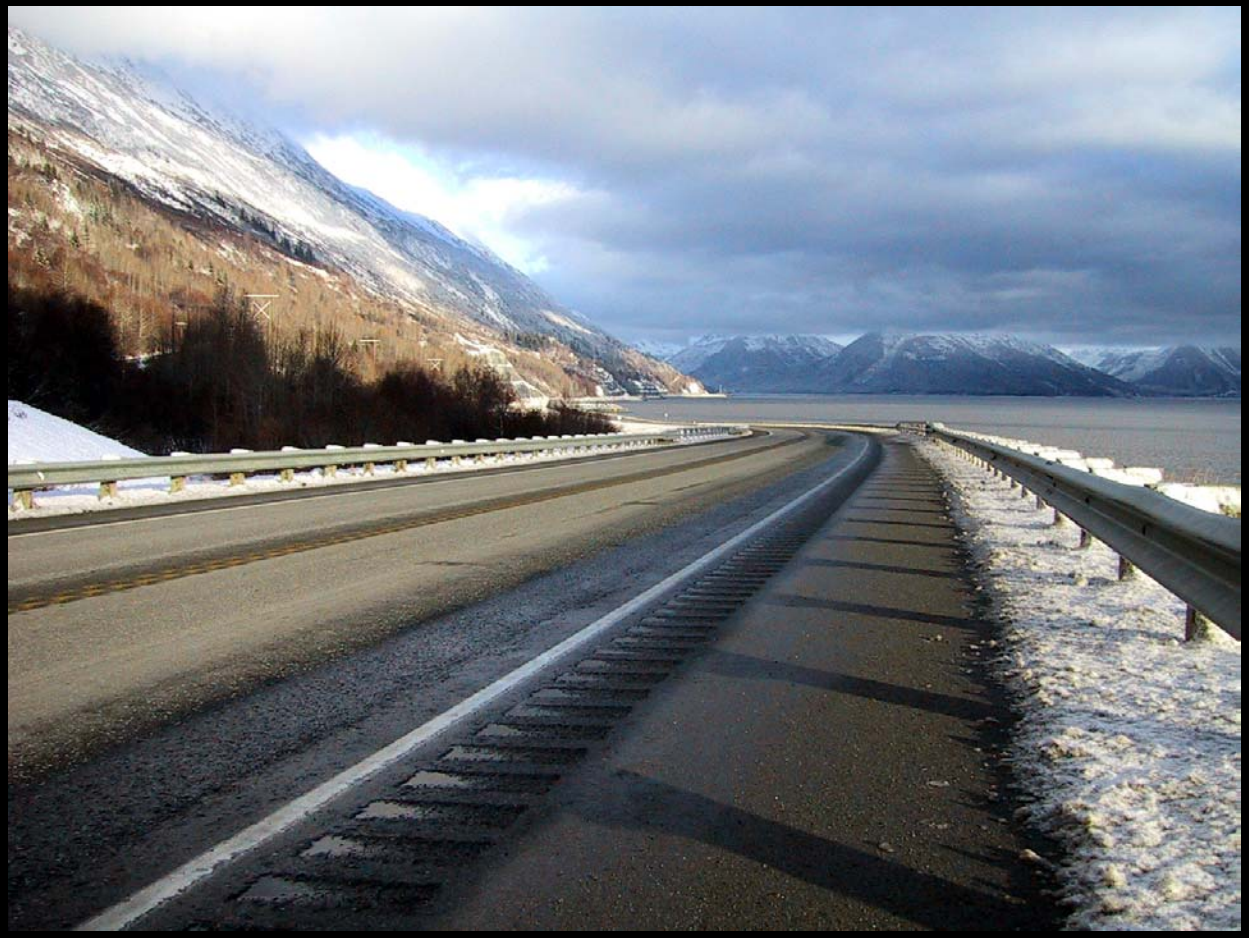

Alaska DOT - approx 40 miles

Centerline & Shoulder Rumbles

Maryland DOT

xx locations, approx xx miles

Centerline & Shoulder Rumbles

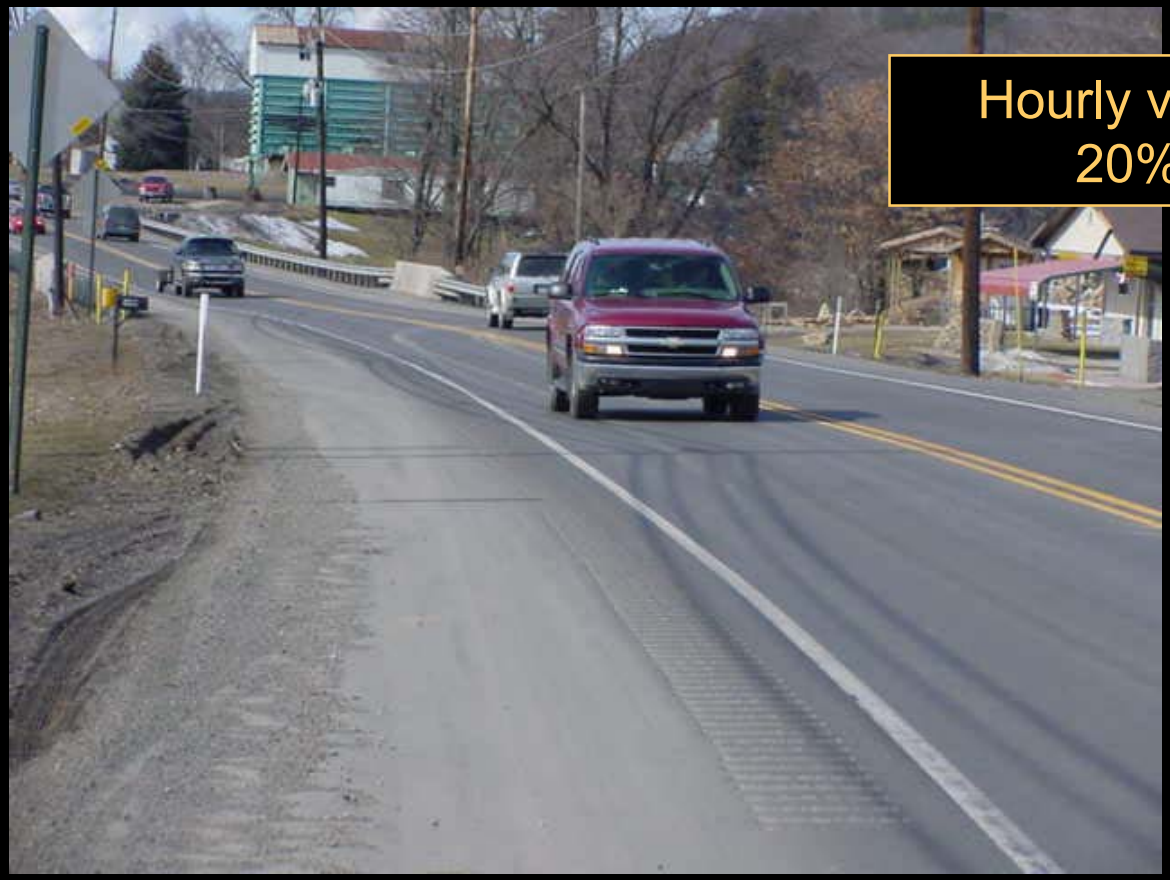

Hourly volume 800
20% trucks

Pennsylvania DOT
6 locations, approx 9 miles

Centerline & Shoulder Rumbles

Texas DOT

several locations, approx 8 miles

Rumbles in the Driving Lane

Cut-in rumbles –

in advance of Stop Sign

Rumble Strips placed in concrete panel →

Iowa - placed on 80% of State system

Thermoplastic rumbles –
in advance of Stop Sign

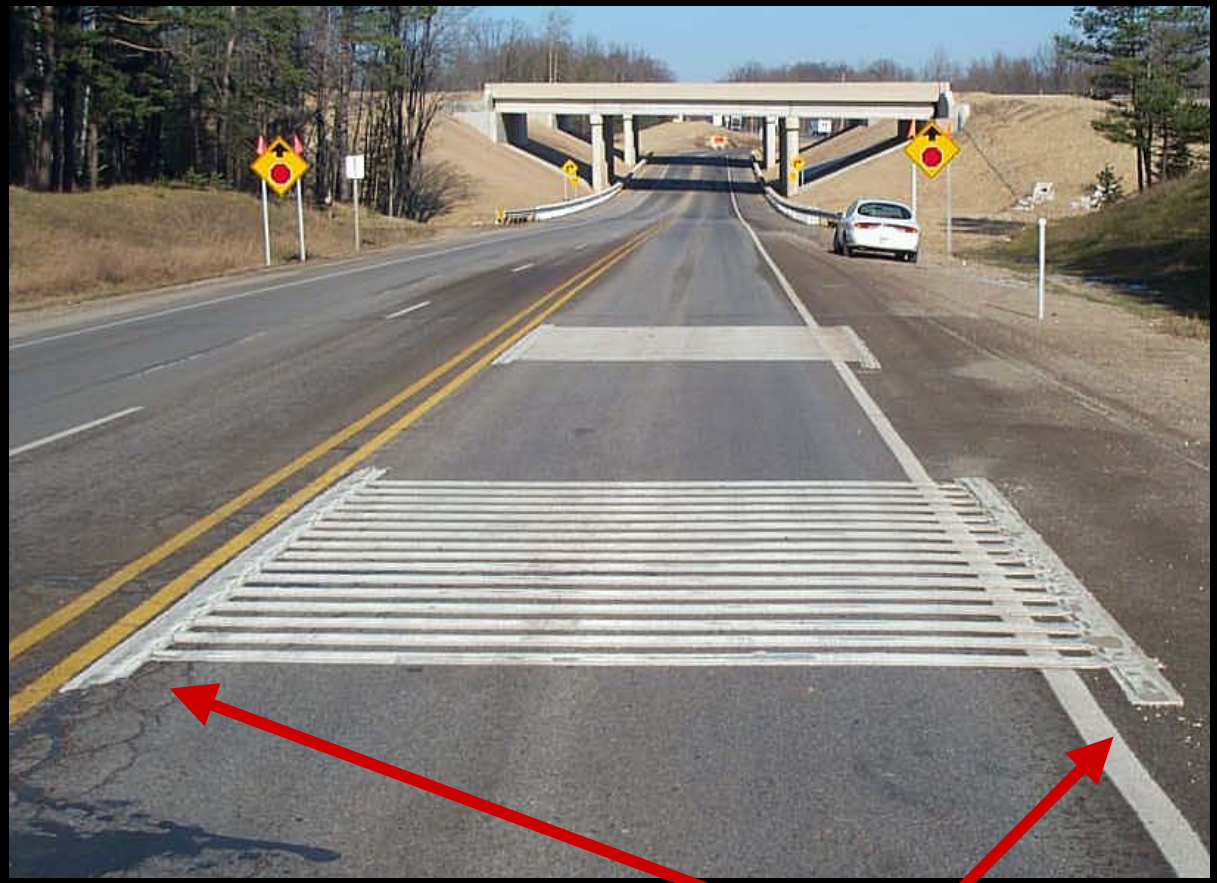

Michigan - DOT design

2-ft “ramp” guides snowplow over bars

Thermoplastic rumbles – in advance of Stop Sign

Michigan - typical county design

Thermoplastic rumbles – in advance of Traffic Signal

Indiana - US-24 near Peru

Cut-in rumbles –

in advance of sharp curve

Iowa

Cut-in rumbles –

in advance of roundabout

Kansas DOT

Kansas DOT

High-speed rural roundabout:

65 mph approach

4 sets of cut-in rumble strips

Kansas DOT

High-speed rural roundabout:

Loren Hill
Minnesota DOT
loren.hill@dot.state.mn.us
651 284-3455

Jim Willis
Safety Engineer
Mississippi DOT
601 359-1454

Paul Carlson
Texas Transportation Institute
paul-carlson@tamu.edu
979-845-1728

Bill Crawford
Highway Safety Liaison
Pennsylvania DOT
wicrawford@state.pa.us
717 705-1437

Toby Rickman
Washington State DOT
Rickman@wsdot.wa.gov
360 705-7280

Jill Morena
Pvmt Marking Engr
Michigan DOT
morenaj@michigan.gov
517 373-3340

Kurt Smith
Alaska DOT
kurt_smith@dot.state.ak.us
907 465-6963

Tom Welch
Iowa DOT
tom.welch@dot.state.ia.us
515 239-1267

Dave Morena
FHWA Michigan Division
Traffic & Safety Engineer
David.Morena@fhwa.dot.gov
517 702-1836