Form No. DMB 234 (Rev. 1/96)
AUTHORITY: Act 431 of 1984
COMPLETION: Required
PENALTY: Contract will not be executed unless form is filed

STATE OF MICHIGAN
DEPARTMENT OF MANAGEMENT AND BUDGET
PURCHASING OPERATIONS
P.O. BOX 30026, LANSING, MI 48909
OR
530 W. ALLEGAN, LANSING, MI 48933

September 23, 2009

NOTICE
OF
CONTRACT NO. 071B0200025
between
THE STATE OF MICHIGAN
and

NAME & ADDRESS OF CONTRACTOR	TELEPHONE Frank Carrier **(810) 477-8700**
Carrier & Gable, Inc. **24110 Research Drive** **Farmington Hills, MI 48335** **Email: frankcarrier@carriergable.com**	CONTRACTOR NUMBER/MAIL CODE BUYER/CA (517) 241-2619 **Seleana Samuel**
Contract Compliance Inspector: Tim Croze **Traffic Signal Devices - MDOT**	
CONTRACT PERIOD: 3 yrs. + 2 one-year options From: **October 1, 2009** To: **September 30, 2014**	
TERMS **N/A**	SHIPMENT **120 ARO**
F.O.B. **Delivered**	SHIPPED FROM **Farmington Hills, MI**
MINIMUM DELIVERY REQUIREMENTS	
There are NO minimum order requirements	

THIS CONTRACT IS EXTENDED TO LOCAL UNITS OF GOVERNMENT.

The terms and conditions of this Contract are those of ITB #071I9200236, this Contract Agreement and the vendor's quote dated August 12, 2009. In the event of any conflicts between the specifications, and terms and conditions, indicated by the State and those indicated by the vendor, those of the State take precedence.

Estimated Contract Value: $6,104,638.95

Form No. DMB 234 (Rev. 1/96)
AUTHORITY: Act 431 of 1984
COMPLETION: Required
PENALTY: Contract will not be executed unless form is filed

STATE OF MICHIGAN
DEPARTMENT OF MANAGEMENT AND BUDGET
PURCHASING OPERATIONS
P.O. BOX 30026, LANSING, MI 48909
OR
530 W. ALLEGAN, LANSING, MI 48933

CONTRACT NO. 071B0200025
between
THE STATE OF MICHIGAN
and

NAME & ADDRESS OF CONTRACTOR	TELEPHONE Frank Carrier **(810) 477-8700**
Carrier & Gable, Inc. **24110 Research Drive** **Farmington Hills, MI 48335** **Email: frankcarrier@carriergable.com**	CONTRACTOR NUMBER/MAIL CODE BUYER/CA (517) 241-2619 **Seleana Samuel**
Contract Compliance Inspector: Tim Croze **Traffic Signal Devices - MDOT**	
CONTRACT PERIOD: 3 yrs. + 2 one-year options From: **October 1, 2009** To: **September 30, 2014**	
TERMS **N/A**	SHIPMENT **120 ARO**
F.O.B. **Delivered**	SHIPPED FROM **Farmington Hills, MI**
MINIMUM DELIVERY REQUIREMENTS **There are NO minimum order requirements**	
MISCELLANEOUS INFORMATION: **THIS CONTRACT IS EXTENDED TO LOCAL UNITS OF GOVERNMENT.** **The terms and conditions of this Contract are those of ITB #071I9200236, this Contract Agreement and the vendor's quote dated August 12, 2009. In the event of any conflicts between the specifications, and terms and conditions, indicated by the State and those indicated by the vendor, those of the State take precedence.** **Estimated Contract Value: $6,104,638.95**	

THIS IS NOT AN ORDER: This Contract Agreement is awarded on the basis of our inquiry bearing the ITB No. 071I9200236. Orders for delivery will be issued directly by the Department of Transportation through the issuance of a Purchase Order Form.

All terms and conditions of the invitation to bid are made a part hereof.

FOR THE CONTRACTOR:	**FOR THE STATE:**
Carrier & Gable, Inc. Firm Name	Signature
Authorized Agent Signature	**Anthony DesChenes, Director** Name/Title
Authorized Agent (Print or Type)	**Commodities Division, Purchasing Operations** Division
Date	Date

Table of Contents

DEFINITIONS ***1***

Article 1 – Statement of Work (SOW) ***3***

1.010 Project Identification **3**
1.011 Project Request 3
1.012 Background – Delted Not Applicable 3

1.020 Scope of Work and Deliverables **3**
1.021 In Scope 3
1.022 Work and Deliverable 3

1.030 Roles and Responsibilities **3**
1.031 Contractor Staff, Roles, and Responsibilities 3

1.040 Project Plan **4**
1.041 Project Plan Management 4
1.042 Reports 4

1.050 Acceptance **4**
1.051 Criteria 4
1.052 Final Acceptance Deleted Not Applicable 4

1.060 Proposal Pricing **4**
1.061 Pricing 4
1.062 Price Term 5
1.063 Tax Excluded from Price 5
1.064 Holdback Deleted Not Applicable 5

1.070 ..... Commodity Requirements and Terms ***5***

Product Quality **5**
1.0701 Specifications 5
1.0702 Alternate Bids Deleted Not Applicable 6
1.0703 Research and Development 6
1.0704 Quality Assurance Program 6
1.0705 Warranty for Products or Services 6
1.0706 Training 6
1.0707 Special Programs 6
1.0708 Security 6

Delivery Capabilities **7**
1.709 Time Frames 7
1.0710 Minimum Order 7
1.0711 Packaging 7
1.0712 Palletizing 7
1.0713 Delivery Term 7
1.0714 Contract Performance 7
1.0715 Place of Performance 8
1.0716 Environmental Requirements 8
1.0717 Subcontractors 10
1.0718 Reports and Meetings Deleted Not Applicable 10
1.719 Samples/Models Delted Not Applicable 10

1.080 ..... Additional Requirements ***10***
1.081 Additional Terms and Conditions specific to this RFP Deleted Not Applicable 10

Article 2, Terms and Conditions ***11***

2.000 *Contract Structure and Term* **11**
2.001 **Contract Term** 11
2.002 **Options to Renew** 11
2.003 **Legal Effect** 11
2.004 **Attachments & Exhibits** 11
2.005 **Ordering** 11
2.006 **Order of Precedence** 11
2.007 **Headings** 12
2.008 **Form, Function & Utility** 12
2.009 **Reformation and Severability** 12
2.010 **Consents and Approvals** 12
2.011 **No Waiver of Default** 12
2.012 **Survival** 12

2.020 *Contract Administration* **12**
2.021 **Issuing Office** 12
2.022 **Contract Compliance Inspector (CCI)** 12
2.023 **Project Manager** 13
2.024 **Change Requests** 13
2.025 **Notices** 13
2.026 **Binding Commitments** 14
2.027 **Relationship of the Parties** 14
2.028 **Covenant of Good Faith** 14
2.029 **Assignments** 14

2.030 *General Provisions* **14**
2.031 **Media Releases** 14
2.032 **Contract Distribution** 15
2.033 **Permits** 15
2.034 **Website Incorporation** 15
2.035 **Future Bidding Preclusion** 15
2.036 **Freedom of Information** 15
2.037 **Disaster Recovery** 15

2.040 *Financial Provisions* **15**
2.041 **Fixed Prices for Services/Deliverables** 15
2.042 **Adjustments for Reductions in Scope of Services/Deliverables** 15
2.043 **Services/Deliverables Covered** 15
2.044 **Invoicing and Payment – In General** 16
2.045 **Pro-ration** 16
2.046 **Antitrust Assignment** 16
2.047 **Final Payment** 16
2.048 **Electronic Payment Requirement** 16

2.050 *Taxes* **17**
2.051 **Employment Taxes** 17
2.052 **Sales and Use Taxes** 17

2.060 *Contract Management* **17**
2.061 **Contractor Personnel Qualifications** 17
2.062 **Contractor Key Personnel** 17
2.063 **Re-assignment of Personnel at the State's Request** 18
2.064 **Contractor Personnel Location** 18
2.065 **Contractor Identification** 18
2.066 **Cooperation with Third Parties** 18
2.067 **Contract Management Responsibilities** 18
2.068 **Contractor Return of State Equipment/Resources** 18

2.070 ***Subcontracting by Contractor*** **19**
2.071 **Contractor full Responsibility** 19
2.072 **State Consent to delegation** 19
2.073 **Subcontractor bound to Contract** 19
2.074 **Flow Down** 19
2.075 **Competitive Selection** 19

2.080 ***State Responsibilities*** **19**
2.081 **Equipment** 19
2.082 **Facilities** 20

2.090 ***Security*** **20**
2.091 **Background Checks** 20
2.092 **Security Breach Notification** 20
2.093 **PCI Data Security Requirements Deleted Not Applicable** 20

2.100 ***Confidentiality*** **20**
2.101 **Confidentiality** 20
2.102 **Protection and Destruction of Confidential Information** 21
2.103 **Exclusions** 21
2.104 **No Implied Rights** 21
2.105 **Respective Obligations** 21

2.110 ***Records and Inspections*** **21**
2.111 **Inspection of Work Performed** 21
2.112 **Examination of Records** 22
2.113 **Retention of Records** 22
2.114 **Audit Resolution** 22
2.115 **Errors** 22

2.120 ***Warranties*** **22**
2.121 **Warranties and Representations** 22
2.122 **Warranty of Merchantability** 24
2.123 **Warranty of Fitness for a Particular Purpose** 24
2.124 **Warranty of Title** 24
2.125 **Equipment Warranty** 24
2.126 **Equipment to be New** 24
2.127 **Prohibited Products** 25
2.128 **Consequences For Breach** 25

2.130 ***Insurance*** **25**
2.131 **Liability Insurance** 25
2.132 **Subcontractor Insurance Coverage** 27
2.133 **Certificates of Insurance and Other Requirements** 27

2.140 ***Indemnification*** **27**
2.141 **General Indemnification** 27
2.142 **Code Indemnification** 27
2.143 **Employee Indemnification** 28
2.144 **Patent/Copyright Infringement Indemnification** 28
2.145 **Continuation of Indemnification Obligations** 28
2.146 **Indemnification Procedures** 28

2.150 ***Termination/Cancellation*** **29**
2.151 **Notice and Right to Cure** 29
2.152 **Termination for Cause** 29
2.153 **Termination for Convenience** 30
2.154 **Termination for Non-Appropriation** 30
2.155 **Termination for Criminal Conviction** 30

2.156 Termination for Approvals Rescinded 31
2.157 Rights and Obligations upon Termination 31
2.158 Reservation of Rights 31

2.160 Termination by Contractor **31**
2.161 Termination by Contractor 31

2.170 Transition Responsibilities **32**
2.171 Contractor Transition Responsibilities 32
2.172 Contractor Personnel Transition 32
2.173 Contractor Information Transition 32
2.174 Contractor Software Transition 32
2.175 Transition Payments 32
2.176 State Transition Responsibilities 32

2.180 Stop Work **32**
2.181 Stop Work Orders 33
2.182 Cancellation or Expiration of Stop Work Order 33
2.183 Allowance of Contractor Costs 33

2.190 Dispute Resolution **33**
2.191 In General 33
2.192 Informal Dispute Resolution 33
2.193 Injunctive Relief 34
2.194 Continued Performance 34

2.200 Federal and State Contract Requirements **34**
2.201 Nondiscrimination 34
2.202 Unfair Labor Practices 34
2.203 Workplace Safety and Discriminatory Harassment 34
2.204 Prevailing Wage 35

2.210 Governing Law **35**
2.211 Governing Law 35
2.212 Compliance with Laws 35
2.213 Jurisdiction 35

2.220 Limitation of Liability **35**
2.221 Limitation of Liability 35

2.230 Disclosure Responsibilities **35**
2.231 Disclosure of Litigation 36
2.232 Call Center Disclosure Deleted Not Applicble 36
2.233 Bankruptcy 36

2.240 Performance Deleted Not Applicable **37**
2.241 Time of Performance 37
2.242 Service Level Agreements (SLAs) Deleted Not Applicable 37
2.243 Liquidated Damages Deleted Not Applicable 37
2.244 Excusable Failure 37

2.250 Approval of Deliverables Deleted Not Applicable **38**
2.251 Delivery Responsibilities 38
2.252 Delivery of Deliverables 38
2.253 Testing 38
2.254 Approval of Deliverables, In General 39
2.255 Process For Approval of Written Deliverables 39
2.256 Process for Approval of Services 40
2.257 Process for Approval of Physical Deliverables 40
2.258 Final Acceptance 40

2.260 ***Ownership*** **40**
2.261 **Ownership of Work Product by State** 40
2.262 **Vesting of Rights** 40
2.263 **Rights in Data** 41
2.264 **Ownership of Materials** 41

2.270 ***State Standards*** **41**
2.271 **Existing Technology Standards** 41
2.272 **Acceptable Use Policy** 41
2.273 **Systems Changes** 41

2.280 ***Extended Purchasing*** **41**
2.281 **MiDEAL** 41

2.282 ***State Employee Purchases Deleted Not Applicable*** **42**

2.290 ***Environmental Provision*** **42**
2.291 **Environmental Provision** 42

2.300 ***Other Provisions*** **43**

Attachment A: MDOT Standard Plans and Specifications
Attachment B: Item Listing & Price Sheet

DEFINITIONS

"Days" means calendar days unless otherwise specified.

"24x7x365" means 24 hours a day, seven days a week, and 365 days a year (including the 366th day in a leap year).

"Additional Service" means any Services/Deliverables within the scope of the Contract, but not specifically provided under any Statement of Work, that once added will result in the need to provide the Contractor with additional consideration.

"Audit Period" has the meaning given in **Section 2.093.**

"Business Day," Whether capitalized or not, shall mean any day other than a Saturday, Sunday, Office of State **Employer mandated furlough day**, or State-recognized legal holiday (as identified in the Collective Bargaining Agreement for State employees) from 8:00am EST through 5:00pm EST unless otherwise stated..

"Blanket Purchase Order" is an alternate term for Contract and is used in the States computer system.

"Business Critical" means any function identified in any Statement of Work as Business Critical.

"Chronic Failure" is defined in any applicable Service Level Agreements.

"Deleted – Not Applicable" means that section is not applicable or included in this RFP. This is used as a placeholder to maintain consistent numbering.

"Deliverable" means physical goods and/or commodities as required or identified by a Statement of Work

"DMB" means the Michigan Department of Management and Budget

"Environmentally preferable products" means a product or service that has a lesser or reduced effect on human health and the environment when compared with competing products or services that serve the same purpose. Such products or services may include, but are not limited to, those which contain recycled content, minimize waste, conserve energy or water, and reduce the amount of toxics either disposed of or consumed.

"Excusable Failure" has the meaning given in **Section 2.214.**

"Hazardous material" means any material defined as hazardous under the latest version of federal Emergency Planning and Community Right-to-Know Act of 1986 (including revisions adopted during the term of the Contract).

"Incident" means any interruption in Services.

"ITB" is a generic term used to describe an Invitation to Bid. The ITB serves as the document for transmitting the RFP to potential bidders

"Key Personnel" means any Personnel designated in **Section 1.031** as Key Personnel.

"New Work" means any Services/Deliverables outside the scope of the Contract and not specifically provided under any Statement of Work, that once added will result in the need to provide the Contractor with additional consideration.

"Ozone-depleting substance" means any substance the Environmental Protection Agency designates in 40 CFR part 82 as: (1) Class I, including, but not limited to, chlorofluorocarbons, halons, carbon tetrachloride, and methyl chloroform; or (2) Class II, including, but not limited to, hydrochlorofluorocarbons.

"Post-Consumer Waste" means any product generated by a business or consumer which has served its intended end use, and which has been separated or diverted from solid waste for the purpose of recycling into a usable commodity or product, and which does not include post-industrial waste.

"Post-Industrial Waste" means industrial by-products which would otherwise go to disposal and wastes generated after completion of a manufacturing process, but does not include internally generated scrap commonly returned to industrial or manufacturing processes.

"Recycling" means the series of activities by which materials that are no longer useful to the generator are collected, sorted, processed, and converted into raw materials and used in the production of new products. This definition excludes the use of these materials as a fuel substitute or for energy production.

"Reuse" means using a product or component of municipal solid waste in its original form more than once.

"RFP" means a Request for Proposal designed to solicit proposals for services.

"Services" means any function performed for the benefit of the State.

"Source reduction" means any practice that reduces the amount of any hazardous substance, pollutant, or contaminant entering any waste stream or otherwise released into the environment prior to recycling, energy recovery, treatment, or disposal.

"State Location" means any physical location where the State performs work. State Location may include state-owned, leased, or rented space.

"Subcontractor" means a company Contractor delegates performance of a portion of the Services to, but does not include independent contractors engaged by Contractor solely in a staff augmentation role.

"Unauthorized Removal" means the Contractor's removal of Key Personnel without the prior written consent of the State.

"Waste prevention" means source reduction and reuse, but not recycling.

"Waste reduction", or "pollution prevention" means the practice of minimizing the generation of waste at the source and, when wastes cannot be prevented, utilizing environmentally sound on-site or off-site reuse and recycling. The term includes equipment or technology modifications, process or procedure modifications, product reformulation or redesign, and raw material substitutions. Waste treatment, control, management, and disposal are not considered pollution prevention, per the definitions under Part 143, Waste Minimization, of the Natural Resources and Environmental Protection Act (NREPA), 1994 PA 451, as amended.

"Work in Progress" means a Deliverable that has been partially prepared, but has not been presented to the State for Approval.
"Work Product" refers to any data compilations, reports, and other media, materials, or other objects or works of authorship created or produced by the Contractor as a result of an in furtherance of performing the services required by this Contract.

Article 1 – Statement of Work (SOW)

1.010 Project Identification

1.011 Project Request

This Contract is for traffic signals and traffic signal equipment to be used by the Michigan Department of Transportation (MDOT).

1.012 Background – Delted Not Applicable

1.020 Scope of Work and Deliverables

1.021 In Scope

Contractor shall supply traffic signals and components per Attachment A. Item Listing

1.022 Work and Deliverable

Contractor must provide Deliverables/Services and staff, and otherwise do all things necessary for or incidental to the performance of work, as set forth in Sections 1.020 and 1.031 of this Contract.

1.030 Roles and Responsibilities

1.031 Contractor Staff, Roles, and Responsibilities

The Contractor shall have the capacity to receive orders electronically, by phone, facsimile, and by written order. Contractor shall have internal controls, approved by Purchasing Operations, to insure that authorized individuals with the State place orders. The Contractor shall verify orders that have quantities that appear to be abnormal or excessive.

Contractor contact information is as follows:

Joe Rodes
Customer Service Representative
Toll Free: 800-451-6854
Phone: 248/477-8700
Fax: 248/473-0730
joerodes@carriergable.com

Jason Archibald
Warehouse Manager
Toll Free: 800-451-6854
Phone: 248/477-8700
Fax: 248/473-0730
jasonarchibald@carriergable.com

The Contractor accepts orders via e-mail, fax, phone or mail. Orders for MDOT are only released after receipt of a valid purchase order.

The Contractor's customer service must respond to State agency inquiries promptly. If the customer service contract information changes during the life of the Contract the State must be notified and given new contact information.

Any supplies and services to be furnished under this Contract shall be ordered by issuance of a purchase order, orders will be issued by MDOT

All purchase orders are subject to the terms and conditions of this Contract. In the event of a conflict between a purchase order and this Contract, the Contract shall control.

If mailed, a purchase order is considered "issued" when the State deposits the order in the mail.

1.040 Project Plan

1.041 Project Plan Management

The Contractor will carry out this project under the direction and control of MDOT, Division of Operations, Traffic Signal Operations-Field Support.

1.042 Reports

The Contractor will be able to provide various reports of purchasing activities to Purchasing Operations, DMB on a quarterly basis. Reports shall include, at a minimum, an itemized listing of purchasing activities by each agency, with the agency name, and the total value of purchases for each agency, and a grand total of all purchases

1.050 Acceptance

1.051 Criteria

The following criteria will be used by the State to determine Acceptance of the Services or Deliverables provided under this SOW:

Traffic Signals and Traffic Signal Equipment are inspected for compliance with the attached special provision and approved or rejected upon delivery.

1.052 Final Acceptance Deleted Not Applicable

1.060 Proposal Pricing

1.061 Pricing

Pricing is outlined in Attachment A, Item Listing

State Administrative Fee

The Contractor must collect an Administrative Fee on the sales transacted under this Contract. The Contractor must remit the Administrative Fee in U.S. dollars within 30 days after the end of the quarterly sales reporting period. The Administrative Fee equals one percent of the total quarterly sales reported. Contractor must include the Administrative Fee in their prices.

The Contractor must remit any monies due as a result of the close-out report at the time the close-out report is submitted to Purchasing Operations.

The Contractor must pay the Administrative Fee by check. To ensure the payment is credited properly, the Contractor must identify the check as an "Administrative Fee" and include the following information with the payment: *Applicable State BPO Number, report amount(s), and reporting period covered.*

Contractor must forward the check to the following address:

Department of Management and Budget
Financial Services – Cashier Unit
Lewis Cass Building
320 South Walnut St.
P.O. Box 30681
Lansing, MI 48909

Please make check payable to: State of Michigan

1.062 Price Term

Prices quoted are the maximum for a period of 365 days from the date the Contract becomes effective.

Prices are subject to change at the end of each 365-day period. Such changes shall be based on changes in actual costs incurred. Documentation of such changes must be provided with the request for price change in order to substantiate any requested change. Purchasing Operations reserves the right to consider various pertinent information sources to evaluate price increase requests (such as the CPI and PPI, US City Average, as published by the US Department of Labor, Bureau of Labor Statistics). Purchasing Operations also reserves the right to consider other information related to special economic and/or industry circumstances, when evaluating a price change request. Changes may be either increases or decreases, and may be requested by either party. Approved changes shall be firm for the remainder of the contract period unless further revised at the end of the next 365-day period. Requests for price changes shall be RECEIVED IN WRITING AT LEAST TEN DAYS PRIOR TO THEIR EFFECTIVE DATE, and are subject to written acceptance before becoming effective. In the event new prices are not acceptable, the CONTRACT may be cancelled. **The Contractor remains responsible for performing according to the contract terms at the contract price for all orders received before price revisions are approved or before the contract is cancelled.**

1.063 Tax Excluded from Price

(a) Sales Tax: For purchases made directly by the State, the State is exempt from State and Local Sales Tax. Prices must not include the taxes. Exemption Certificates for State Sales Tax will be furnished upon request.

(b) Federal Excise Tax: The State may be exempt from Federal Excise Tax, or the taxes may be reimbursable, if articles purchased under any resulting Contract are used for the State's exclusive use. Certificates showing exclusive use for the purposes of substantiating a tax-free, or tax-reimbursable sale will be sent upon request. If a sale is tax exempt or tax reimbursable under the Internal Revenue Code, prices must not include the Federal Excise Tax.

1.064 Holdback Deleted Not Applicable

1.070 Commodity Requirements and Terms

Product Quality

1.0701 Specifications

Definite Specifications - All commodities and/or services to be furnished hereunder shall conform to the specifications as noted in Attachment B: MDOT Standard Plans and Specifications.

1.0702 Alternate Bids Deleted Not Applicable

1.0703 Research and Development

Contractor shall continue to invest in new product development and research to stay current with ongoing demands.

1.0704 Quality Assurance Program

The Contractor inspects all deliveries for conformance to Attachment B: MDOT Standard Plans and Specifications. Some products are sample inspected and some are100% inspected. All shipments of material from the Contractor are checked for completeness by two (2) shipping personnel. All controller cabinet assemblies are provided with a check – list to verify specifications are complied with. Certificate of Compliance forms are provided, when requested on all shipments from the Contractor.

1.0705 Warranty for Products or Services

All product provided by the Contractor will have a manufacturers warranty for 1 – 5 years depending on the product. The normal standard warranty guarantees that all material supplied shall be free from all defects in material and workmanship.

Upon notification of a defective product by phone, e-mail, fax or letter, the State can do one of the following:

1. Return the product to Carrier & Gable for repair via mail or in person
2. Request Carrier & Gable pick up the defective product

In either case, a return form would be provided to the State in order to document receipt and shipment of the returned product(s).

Damaged or defective products are returned to the manufacturer for repair, repaired by Carrier & Gable or replaced with a new identical part.

Carrier & Gable personnel are available to assist state personnel in installation and trouble shooting products that they provide at no charge to the State. This applies to both warranty and non-warranty products.

1.0706 Training

Carrier & Gable annually provides training on products sold and serviced by the Contractor. All training, whether at Carrier &gable facilities or at the local agencies facility is on a no charge basis. A copy of the 2009 training schedule is available upon request.

1.0707 Special Programs

Carrier & Gable will trade or credit MDOT the full purchase value of a returned product as long as it has never been used and is a current production model. Occasionally, manufactures offer special trade-in programs. These offers are made available to state agencies for their consideration.

1.0708 Security

The resulting Contract may require frequent deliveries to State of Michigan facilities.

The Contractor and its subcontractors shall comply with the security access requirements of individual State facilities; see section 2.051, Background Checks and Security.

Delivery Capabilities

1.709 Time Frames

All orders are to be delivered within 120 calendar days after receipt of order. Normal delivery time for Carrier & Gable is 4 – 6 weeks. However, the Contractor has a large inventory of control devices and quick delivery can be completed within the same day or next day after notice of a release for most items.

1.0710 Minimum Order

There is no minimum order.

1.0711 Packaging

Packaging and containers, etc., shall be in accordance with supplier's commercial practice and shall meet the requirements of Department of Transportation (D.O.T.) and rail and motor carrier freight classifications in effect at time of shipment, which will permit application of the lowest freight rate.

1.0712 Palletizing

Shipments shall be palletized whenever possible and shall conform to the following:

- Manufacturer's standard 4-way shipping pallets are acceptable.
- Maximum height: 5'6"; including pallet.
- Maximum weight: 3500 pounds; including pallet.
- Pallets are to be securely banded or shrink-wrapped.
- The cost of palletizing must be included in the unit price.

1.0713 Delivery Term

Prices shall be quoted "F.O.B. Delivered" with transportation charges prepaid on all orders to the State, or on all orders totaling or in excess of the bidder's minimum order requirement stated on the Item Listing.

Other F.O.B. terms will not be accepted and shall disqualify a bidder from further consideration.

Freight Charges - Should an agency order below the minimum order requirement of a Contract, or should a vendor quote F.O.B. Shipping Point on one-time purchases, the Contractor should choose the most economically advantageous carrier and must be approved by the using agency.

United Parcel Service (UPS) must be used in instances where the weight of the shipment is less than 150 lbs., or where shipments could be separated into smaller parcels such as three (3) 50 lb. packages. Also, if the shipment weighs less than 150 lbs, but costs $3000 or more, it must be sent by the appropriate carrier listed above.

If the Contractor fails to follow these shipping instructions, the State shall pay the carrier used and deduct the difference from the Contractor's invoice for the amount that was charged and the amount that would have been charged if the requested carrier had been used.

1.0714 Contract Performance

Carrier & Gable, Inc. has not had any contracts terminated for default

1.0715 Place of Performance

Place of Performance Full address	Owner/Operator of facility to be used	Percent (%) of Contract value to be Performed at listed Location
24110 Research Drive Farmington Hills, MI 48335		

1.0716 Environmental Requirements

Energy Efficiency Purchasing Policy – The State shall seek wherever possible to purchase energy efficient products. This may include giving preference to U.S. Environmental Protection Agency (EPA) certified 'Energy Star' products for any category of products for which EPA has established Energy Star certification. For other purchases, the State may include energy efficiency as one of the priority factors to consider when choosing among comparable bids.

Environmental Purchasing Policy – The State of Michigan has committed to encourage the use of products and services that impact the environment less than competing products. This can be best accomplished by including environmental considerations in purchasing decisions, while remaining fiscally responsible, to promote practices that improve worker health, conserve natural resources, and prevent pollution. Environmental components that may be considered in Best Value Purchasing evaluation include: recycled content and recyclability; energy efficiency; and the presence of undesirable materials in the products, especially those toxic chemicals which are persistent and bio-accumulative. Bidders able to supply products containing recycled and environmentally preferable materials that meet performance requirements are encouraged to offer them in bids and proposals. Information on any relevant third party certification (such as Green Seal, Energy Star, etc.) should also be provided.

I. Recycled Content and Recyclability

A. Recycled Packaging. The Contractor may offer some or all of the following items listed below or provide alternative proposal as to how packaging materials can be reduced, eliminated or otherwise made more environmentally preferable. It is desirable that Bidders offer packaging which:

a. is made from recycled content which meets or exceeds all federal and state recycled content guidelines (currently 35% post-consumer for all corrugated cardboard)
b. minimizes or eliminates the use of polystyrene or other difficult to recycle materials
c. minimizes or eliminates the use packaging and containers and, in the alternative, minimizes or eliminates the use of non-recyclable packaging and containers
d. provides for a return program where packaging can be returned to a specific location for recycling
e. contains materials which are easily recyclable in Michigan.

The Contractor has indicated below an estimate of the percentage of recycled materials, if any, contained in each item bid. Higher percentages of recycled materials are preferred. Product performance is paramount, whether containing recycled material or not; however, preference will be given to products that perform up to specification and are environmentally preferable without compromising quality.

___0____ % (Total estimated percentage of recovered material)

___0_____ % (Estimated percentage of post-consumer material)

___0____ % (Estimated percentage of post-industrial waste)

II. Materials Identification and Tracking

A. Hazardous Material Identification. 'Hazardous material', as used in this clause, includes any material defined as hazardous under the latest version of federal Emergency Planning and Community Right-to-Know Act of 1986 (including revisions adopted during the term of the contract).

(1) The bidder must list any hazardous material, as defined in §370.20 (a) of 40 CFR, to be delivered under this contract. The hazardous material shall be properly identified and include any applicable identification number, such as National Stock Number or Special Item Number. This information shall also be included on the Material Safety Data Sheet submitted under this contract.

Material (if none, enter 'None')	Identification Number
Loop Sealant	Item 24 78-8095-0724-2
Epoxy	Item 310 VSN 240-F

(2) This list must be updated during performance of the contract whenever the Contractor determines that any other material to be delivered under this contract is hazardous.

(3) The apparently successful bidder agrees to submit, for each item as required prior to award, a Material Safety Data Sheet for each hazardous material identified in paragraph (1) of this clause. Data shall be submitted in accordance with Section 312 of the federal Emergency Planning and Community Right-to-Know Act, whether or not the apparently successful bidder is the actual manufacturer of these items. Failure to submit the Material Safety Data Sheet prior to award may result in the apparently successful bidder being considered non-responsive and ineligible for award.

B. Mercury Content. It is the clear intent of state agencies to avoid purchasing products that contain intentionally-added mercury whenever possible. Bidders shall offer mercury-free product alternatives whenever available. Should mercury-free alternatives not exist, as presently is the case with a few select products and devices such as fluorescent lamps or where the alternative is not yet cost competitive, such as dental amalgam, bidders shall offer the lowest mercury content available for a given application. Bidders shall disclose whenever products contain added-mercury by using the following format.

( ) Product contains added-Mercury (attach an explanation that includes: the amount or concentration of mercury and justification as to why this particular product is essential).
In addition, the Bidder shall also ensure that all products to be purchased containing intentionally added-mercury shall be labeled as: "product contains mercury/recycle or dispose of properly." For instances where space constraints limit the amount or size of print, the chemical symbol "Hg" followed by a picture of a trash container with a diagonal line through it shall suffice for labeling requirements.
BIDDERS PLEASE NOTE: Michigan Law Prohibits the sale of mercury-containing thermostats, thermometers, sphygmomanometers (blood pressure monitors) and other types of medical devices. For specific details visit: http://www.michigan.gov/deq/0,1607,7-135-3307_29693_4175-160230--,00.html

C. Brominated Flame Retardants (BFR). Bidders shall disclose whether the products being offered contain toxic flame retardants. Bidders are encouraged to provide BFR-free alternatives when available.

(X) Product does not contain BFR's

( ) Product does contain BFR's (attach an explanation)

D. Ozone Depleting Substances

'Ozone-depleting substance', as used in this clause, means any substance the Environmental Protection Agency designates in 40 CFR part 82 as:

(1) Class I, including, but not limited to, chlorofluorocarbons, halons, carbon tetrachloride, and methyl chloroform; or

(2) Class II, including, but not limited to, hydrochlorofluorocarbons.

The Contractor shall label products which contain or are manufactured with ozone-depleting substances in the manner and to the extent required by 42 U.S.C. 7671j (b), (c), and (d) and 40 CFR part 82, Subpart E, as follows:

'Warning: Contains (or manufactured with, if applicable) _____ (insert the name of the substance(s).), a substance(s) which harm(s) public health and environment by destroying ozone in the upper atmosphere.'

A. Clean Air and Water

Vendor certifies that any facility to be used in the performance of this contract has all the necessary environmental permits and is in consistent compliance with all applicable environmental requirements and has no outstanding unresolved violations.

The vendor will immediately notify the state, before award, of the receipt of any communication from the Environmental Protection Agency or any state environmental agency, of civil or criminal enforcement for any facility that the vendor proposes to use in the performance of this contract.
_____ (Initial)

B. Emergency Planning and Community Right-to-Know Reporting - By signing this offer, the bidder certifies that:

(1) The owner or operator of each facility that will be used in the performance of this contract is in compliance with the filing and reporting requirements described in sections 302, 304, 311, 312 and 313 of the Emergency Planning and Community Right-to-Know Act of 1986 (EPCRA) (42 U.S.C. 11001, et. seq.) and section 6607 of the Pollution Prevention Act of 1990 (PPA) (42 U.S.C. 13101, et. seq.). EPCRA filing and reporting requirements include emergency planning notification, release reporting, hazardous chemical inventory reporting, and toxic chemical release inventory (TRI) reporting.

(2) The owner or operator of each facility that will be used in the performance of this contract will maintain compliance with the filing and reporting requirements described in sections 302, 304, 311, 312 and 313 of the Emergency Planning and Community Right-to-Know Act of 1986 (EPCRA) (42 U.S.C. 11001, et. seq.) and section 6607 of the Pollution Prevention Act of 1990 (PPA) (42 U.S.C. 13101, et. seq.) for the life of the contract.
_____ (Initial)

1.0717 Subcontractors

The Contractor will not utilize subcontractors during the performance of this Contract.

1.0718 Reports and Meetings Deleted Not Applicable

1.719 Samples/Models Delted Not Applicable

1.080 Additional Requirements

1.081 Additional Terms and Conditions specific to this RFP Deleted Not Applicable

Article 2, Terms and Conditions

2.000 Contract Structure and Term

2.001 Contract Term

This Contract is for a period of 5 years beginning October 1, 2009 through October 1, 2014. All outstanding Purchase Orders must also expire upon the termination (cancellation for any of the reasons listed in **Section 2.150**) of the Contract, unless otherwise extended under the Contract. Absent an early termination for any reason, Purchase Orders issued but not expired, by the end of the Contract's stated term, will remain in effect for the balance of the fiscal year for which they were issued.

2.002 Options to Renew

This Contract may be renewed in writing by mutual agreement of the parties not less than 30 days before its expiration. The Contract may be renewed for up to 2 additional one year periods.

2.003 Legal Effect

Contractor shall show acceptance of this Contract by signing two copies of the Contract and returning them to the Contract Administrator. The Contractor shall not proceed with the performance of the work to be done under the Contract, including the purchase of necessary materials, until both parties have signed the Contract to show acceptance of its terms, and the Contractor receives a contract release/purchase order that authorizes and defines specific performance requirements.

Except as otherwise agreed in writing by the parties, the State assumes no liability for costs incurred by Contractor or payment under this Contract, until Contractor is notified in writing that this Contract (or Change Order) has been approved by the State Administrative Board (if required), approved and signed by all the parties, and a Purchase Order against the Contract has been issued.

2.004 Attachments & Exhibits

All Attachments and Exhibits affixed to any and all Statement(s) of Work, or appended to or referencing this Contract, are incorporated in their entirety and form part of this Contract.

2.005 Ordering

The State will issue a written Purchase Order, Blanket Purchase Order, Direct Voucher or Procurement Card Order, which must be approved by the Contract Administrator or the Contract Administrator's designee, to order any Services/Deliverables under this Contract. All orders are subject to the terms and conditions of this Contract. No additional terms and conditions contained on either a Purchase Order or Blanket Purchase Order apply unless they are also specifically contained in that Purchase Order's or Blanket Purchase Order's accompanying Statement of Work. Exact quantities to be purchased are unknown, however, the Contractor will be required to furnish all such materials and services as may be ordered during the CONTRACT period. Quantities specified, if any, are estimates based on prior purchases, and the State is not obligated to purchase in these or any other quantities.

2.006 Order of Precedence

(a) The Contract, including any Statements of Work and Exhibits, to the extent not contrary to the Contract, each of which is incorporated for all purposes, constitutes the entire agreement between the parties with respect to the subject matter and supersedes all prior agreements, whether written or oral, with respect to the subject matter and as additional terms and conditions on the purchase order must apply as limited by **Section 2.005.**

(b) In the event of any inconsistency between the terms of the Contract and a Statement of Work, the terms of the Statement of Work will take precedence (as to that Statement of Work only); provided, however, that a Statement of Work may not modify or amend the terms of the Contract, which may be modified or amended only by a formal Contract amendment.

2.007 Headings

Captions and headings used in the Contract are for information and organization purposes. Captions and headings, including inaccurate references, do not, in any way, define or limit the requirements or terms and conditions of the Contract.

2.008 Form, Function & Utility

If the Contract is for use of more than one State agency and if the Deliverable/Service does not the meet the form, function, and utility required by that State agency, that agency may, subject to State purchasing policies, procure the Deliverable/Service from another source.

2.009 Reformation and Severability

Each provision of the Contract is severable from all other provisions of the Contract and, if one or more of the provisions of the Contract is declared invalid, the remaining provisions of the Contract remain in full force and effect.

2.010 Consents and Approvals

Except as expressly provided otherwise in the Contract, if either party requires the consent or approval of the other party for the taking of any action under the Contract, the consent or approval must be in writing and must not be unreasonably withheld or delayed.

2.011 No Waiver of Default

If a party fails to insist upon strict adherence to any term of the Contract then the party has not waived the right to later insist upon strict adherence to that term, or any other term, of the Contract.

2.012 Survival

Any provisions of the Contract that impose continuing obligations on the parties, including without limitation the parties' respective warranty, indemnity and confidentiality obligations, survive the expiration or termination of the Contract for any reason. Specific references to survival in the Contract are solely for identification purposes and not meant to limit or prevent the survival of any other section.

2.020 Contract Administration

2.021 Issuing Office

This Contract is issued by the Department of Management and Budget, Purchasing Operations and Michigan Department of Transportation (collectively, including all other relevant State of Michigan departments and agencies, the "State"). Purchasing Operations is the sole point of contact in the State with regard to all procurement and contractual matters relating to the Contract. Purchasing Operations **is the only State office authorized to change, modify, amend, alter or clarify the prices, specifications, terms and conditions of this Contract.** The Contractor Administrator within Purchasing Operations for this Contract is:

Seleana Samuel, Buyer Manager
Purchasing Operations
Department of Management and Budget
Mason Bldg, 2nd Floor
PO Box 30026
Lansing, MI 48909
Samuels1@michigan.gov
517-241-2619

2.022 Contract Compliance Inspector (CCI)

After DMB-PurchOps receives the properly executed Contract, it is anticipated that the Director of Purchasing Operations, in consultation with Michgan Department of Transportation, will direct the person named below, or any other person so designated, to monitor and coordinate the activities for the Contract on a day-to-day basis during its term. However, monitoring of this Contract implies **no authority to change, modify, clarify, amend, or otherwise alter the prices, terms, conditions and specifications of the Contract as that authority is retained by DMB Purchasing Operations**. The Contract Compliance Inspector is:

Tim Croze, P.E.
Roadway Operations Engineer
MDOT-Division of Operations
crozet@michigan.gov
(517) 322-3394

2.023 Project Manager

The Project Manager will be identified to the awarded bidder.

2.024 Change Requests

The State reserves the right to request from time to time any changes to the requirements and specifications of the Contract and the work to be performed by the Contractor under the Contract. During the course of ordinary business, it may become necessary for the State to discontinue certain business practices or create Additional Services/Deliverables. At a minimum, to the extent applicable, the State would like the Contractor to provide a detailed outline of all work to be done, including tasks necessary to accomplish the services/deliverables, timeframes, listing of key personnel assigned, estimated hours for each individual per task, and a complete and detailed cost justification.

If the Contractor does not so notify the State, the Contractor has no right to claim thereafter that it is entitled to additional compensation for performing that service or providing that deliverable.

Change Requests:

(a) By giving Contractor written notice within a reasonable time, the State must be entitled to accept a Contractor proposal for Change, to reject it, or to reach another agreement with Contractor. Should the parties agree on carrying out a Change, a written Contract Change Notice must be prepared and issued under this Contract, describing the Change and its effects on the Services and any affected components of this Contract (a "Contract Change Notice").

(b) No proposed Change must be performed until the proposed Change has been specified in a duly executed Contract Change Notice issued by the Department of Management and Budget, Purchasing Operations.

(c) If the State requests or directs the Contractor to perform any activities that Contractor believes constitute a Change, the Contractor must notify the State that it believes the requested activities are a Change before beginning to work on the requested activities. If the Contractor fails to notify the State before beginning to work on the requested activities, then the Contractor waives any right to assert any claim for additional compensation or time for performing the requested activities. If the Contractor commences performing work outside the scope of this Contract and then ceases performing that work, the Contractor must, at the request of the State, retract any out-of-scope work that would adversely affect the Contract.

2.025 Notices

Any notice given to a party under the Contract must be deemed effective, if addressed to the party as addressed below, upon: (i) delivery, if hand delivered; (ii) receipt of a confirmed transmission by facsimile if a copy of the notice is sent by another means specified in this Section; (iii) the third Business Day after being sent by U.S. mail, postage pre-paid, return receipt requested; or (iv) the next Business Day after being sent by a nationally recognized overnight express courier with a reliable tracking system.

State:
State of Michigan
Purchasing Operations
Attention: Seleana Samuel
PO Box 30026
530 West Allegan
Lansing, Michigan 48909

Contractor:
Name Bill Murphy
Carrier & Gable, Inc.
24110 Research Drive
Farmington Hills, MI 48335

Either party may change its address where notices are to be sent by giving notice according to this Section.

2.026 Binding Commitments

Representatives of Contractor must have the authority to make binding commitments on Contractor's behalf within the bounds set forth in the table. Contractor may change the representatives from time to time upon written notice.

2.027 Relationship of the Parties

The relationship between the State and Contractor is that of client and independent contractor. No agent, employee, or servant of Contractor or any of its Subcontractors must be or must be deemed to be an employee, agent or servant of the State for any reason. Contractor will be solely and entirely responsible for its acts and the acts of its agents, employees, servants and Subcontractors during the performance of the Contract.

2.028 Covenant of Good Faith

Each party must act reasonably and in good faith. Unless stated otherwise in the Contract, the parties will not unreasonably delay, condition or withhold the giving of any consent, decision or approval that is either requested or reasonably required of them in order for the other party to perform its responsibilities under the Contract.

2.029 Assignments

(a) Neither party may assign the Contract, or assign or delegate any of its duties or obligations under the Contract, to any other party (whether by operation of law or otherwise), without the prior written consent of the other party; provided, however, that the State may assign the Contract to any other State agency, department, division or department without the prior consent of Contractor and Contractor may assign the Contract to an affiliate so long as the affiliate is adequately capitalized and can provide adequate assurances that the affiliate can perform the Contract. The State may withhold consent from proposed assignments, subcontracts, or novations when the transfer of responsibility would operate to decrease the State's likelihood of receiving performance on the Contract or the State's ability to recover damages.

(b) Contractor may not, without the prior written approval of the State, assign its right to receive payments due under the Contract. If the State permits an assignment, the Contractor is not relieved of its responsibility to perform any of its contractual duties, and the requirement under the Contract that all payments must be made to one entity continues.

(c) If the Contractor intends to assign the contract or any of the Contractor's rights or duties under the Contract, the Contractor must notify the State in writing at least 90 days before the assignment. The Contractor also must provide the State with adequate information about the assignee within a reasonable amount of time before the assignment for the State to determine whether to approve the assignment.

2.030 General Provisions

2.031 Media Releases

News releases (including promotional literature and commercial advertisements) pertaining to the RFP and Contract or project to which it relates shall not be made without prior written State approval, and then only in accordance with the explicit written instructions from the State. No results of the activities associated with the RFP and Contract are to be released without prior written approval of the State and then only to persons designated.

2.032 Contract Distribution

Purchasing Operations retains the sole right of Contract distribution to all State agencies and local units of government unless other arrangements are authorized by Purchasing Operations.

2.033 Permits

Contractor must obtain and pay any associated costs for all required governmental permits, licenses and approvals for the delivery, installation and performance of the Services. The State must pay for all costs and expenses incurred in obtaining and maintaining any necessary easements or right of way.

2.034 Website Incorporation

The State is not bound by any content on the Contractor's website, even if the Contractor's documentation specifically referenced that content and attempts to incorporate it into any other communication, unless the State has actual knowledge of the content and has expressly agreed to be bound by it in a writing that has been manually signed by an authorized representative of the State.

2.035 Future Bidding Preclusion

Contractor acknowledges that, to the extent this Contract involves the creation, research, investigation or generation of a future RFP, it may be precluded from bidding on the subsequent RFP. The State reserves the right to disqualify any bidder if the State determines that the bidder has used its position (whether as an incumbent Contractor, or as a Contractor hired to assist with the RFP development, or as a Vendor offering free assistance) to gain a competitive advantage on the RFP.

2.036 Freedom of Information

All information in any proposal submitted to the State by Contractor and this Contract is subject to the provisions of the Michigan Freedom of Information Act, 1976 Public Act No. 442, as amended, MCL 15.231, et seq (the "FOIA").

2.037 Disaster Recovery

Contractor and the State recognize that the State provides essential services in times of natural or man-made disasters. Therefore, except as so mandated by Federal disaster response requirements, Contractor personnel dedicated to providing Services/Deliverables under this Contract will provide the State with priority service for repair and work around in the event of a natural or man-made disaster.

2.040 Financial Provisions

2.041 Fixed Prices for Services/Deliverables

Each Statement of Work or Purchase Order issued under this Contract shall specify (or indicate by reference to the appropriate Contract Exhibit) the firm, fixed prices for all Services/Deliverables, and the associated payment milestones and payment amounts. The State may make progress payments to the Contractor when requested as work progresses, but not more frequently than monthly, in amounts approved by the Contract Administrator, after negotiation. Contractor must show verification of measurable progress at the time of requesting progress payments.

2.042 Adjustments for Reductions in Scope of Services/Deliverables

If the scope of the Services/Deliverables under any Statement of Work issued under this Contract is subsequently reduced by the State, the parties shall negotiate an equitable reduction in Contractor's charges under such Statement of Work commensurate with the reduction in scope.

2.043 Services/Deliverables Covered

For all Services/Deliverables to be provided by Contractor (and its Subcontractors, if any) under this Contract, the State shall not be obligated to pay any amounts in addition to the charges specified in this Contract.

2.044 Invoicing and Payment – In General

(a) Each Statement of Work issued under this Contract shall list (or indicate by reference to the appropriate Contract Exhibit) the prices for all Services/Deliverables, equipment and commodities to be provided, and the associated payment milestones and payment amounts.

(b) Each Contractor invoice will show details as to charges by Service/Deliverable component and location at a level of detail reasonably necessary to satisfy the State's accounting and charge-back requirements. Invoices for Services performed on a time and materials basis will show, for each individual, the number of hours of Services performed during the billing period, the billable skill/labor category for such person and the applicable hourly billing rate. Prompt payment by the State is contingent on the Contractor's invoices showing the amount owed by the State minus any holdback amount to be retained by the State in accordance with **Section 1.064**.

(c) Correct invoices will be due and payable by the State, in accordance with the State's standard payment procedure as specified in 1984 Public Act No. 279, MCL 17.51 et seq., within 45 days after receipt, provided the State determines that the invoice was properly rendered.

(d) All invoices should reflect actual work done. Specific details of invoices and payments will be agreed upon between the Contract Administrator and the Contractor after the proposed Contract Agreement has been signed and accepted by both the Contractor and the Director of Purchasing Operations, Department of Management & Budget. This activity will occur only upon the specific written direction from Purchasing Operations.

The specific payment schedule for any Contract(s) entered into, as the State and the Contractor(s) will mutually agree upon. The schedule should show payment amount and should reflect actual work done by the payment dates, less any penalty cost charges accrued by those dates. As a general policy statements shall be forwarded to the designated representative by the 15th day of the following month.

The Government may make progress payments to the Contractor when requested as work progresses, but not more frequently than monthly, in amounts approved by the Contract Administrator, after negotiation. Contractor must show verification of measurable progress at the time of requesting progress payments.

2.045 Pro-ration

To the extent there are any Services that are to be paid for on a monthly basis, the cost of such Services shall be pro-rated for any partial month.

2.046 Antitrust Assignment

The Contractor assigns to the State any claim for overcharges resulting from antitrust violations to the extent that those violations concern materials or services supplied by third parties to the Contractor, toward fulfillment of this Contract.

2.047 Final Payment

The making of final payment by the State to Contractor does not constitute a waiver by either party of any rights or other claims as to the other party's continuing obligations under the Contract, nor will it constitute a waiver of any claims by one party against the other arising from unsettled claims or failure by a party to comply with this Contract, including claims for Services and Deliverables not reasonably known until after acceptance to be defective or substandard. Contractor's acceptance of final payment by the State under this Contract shall constitute a waiver of all claims by Contractor against the State for payment under this Contract, other than those claims previously filed in writing on a timely basis and still unsettled.

2.048 Electronic Payment Requirement

Electronic transfer of funds is required for payments on State Contracts. Contractors are required to register with the State electronically at http://www.cpexpress.state.mi.us. As stated in Public Act 431 of 1984, all contracts that the State enters into for the purchase of goods and services shall provide that payment will be made by electronic fund transfer (EFT).

2.050 Taxes

2.051 Employment Taxes

Contractors are expected to collect and pay all applicable federal, state, and local employment taxes, including the taxes.

2.052 Sales and Use Taxes

Contractors are required to be registered and to remit sales and use taxes on taxable sales of tangible personal property or services delivered into the State. Contractors that lack sufficient presence in Michigan to be required to register and pay tax must do so as a volunteer. This requirement extends to: (1) all members of any controlled group as defined in § 1563(a) of the Internal Revenue Code and applicable regulations of which the company is a member, and (2) all organizations under common control as defined in § 414(c) of the Internal Revenue Code and applicable regulations of which the company is a member that make sales at retail for delivery into the State are registered with the State for the collection and remittance of sales and use taxes. In applying treasury regulations defining "two or more trades or businesses under common control" the term "organization" means sole proprietorship, a partnership (as defined in § 701(a)(2) of the Internal Revenue Code), a trust, an estate, a corporation, or a limited liability company.

2.060 Contract Management

2.061 Contractor Personnel Qualifications

All persons assigned by Contractor to the performance of Services under this Contract must be employees of Contractor or its majority-owned (directly or indirectly, at any tier) subsidiaries (or a State-approved Subcontractor) and must be fully qualified to perform the work assigned to them. Contractor must include a similar provision in any subcontract entered into with a Subcontractor. For the purposes of this Contract, independent contractors engaged by Contractor solely in a staff augmentation role must be treated by the State as if they were employees of Contractor for this Contract only; however, the State understands that the relationship between Contractor and Subcontractor is an independent contractor relationship.

2.062 Contractor Key Personnel

(a) The Contractor must provide the Contract Compliance Inspector with the names of the Key Personnel.
(b) Key Personnel must be dedicated as defined in the Statement of Work to the Project for its duration in the applicable Statement of Work with respect to other individuals designated as Key Personnel for that Statement of Work.
(c) The State will have the right to recommend and approve in writing the initial assignment, as well as any proposed reassignment or replacement, of any Key Personnel. Before assigning an individual to any Key Personnel position, Contractor will notify the State of the proposed assignment, will introduce the individual to the appropriate State representatives, and will provide the State with a resume and any other information about the individual reasonably requested by the State. The State reserves the right to interview the individual before granting written approval. In the event the State finds a proposed individual unacceptable, the State will provide a written explanation including reasonable detail outlining the reasons for the rejection.
(d) Contractor must not remove any Key Personnel from their assigned roles on the Contract without the prior written consent of the State. The Contractor's removal of Key Personnel without the prior written consent of the State is an unauthorized removal ("Unauthorized Removal"). Unauthorized Removals does not include replacing Key Personnel for reasons beyond the reasonable control of Contractor, including illness, disability, leave of absence, personal emergency circumstances, resignation or for cause termination of the Key Personnel's employment. Unauthorized Removals does not include replacing Key Personnel because of promotions or other job movements allowed by Contractor personnel policies or Collective Bargaining Agreement(s) as long as the State receives prior written notice before shadowing occurs and Contractor provides 30 days of shadowing unless parties agree to a different time period. The Contractor with the State must review any Key Personnel replacements, and appropriate transition planning will be established. Any Unauthorized Removal may be considered by the State to be a material breach of the Contract, in respect of which the State may elect to exercise its termination and cancellation rights.

(e) The Contractor must notify the Contract Compliance Inspector and the Contract Administrator at least 10 business days before redeploying non-Key Personnel, who are dedicated to primarily to the Project, to other projects. If the State does not object to the redeployment by its scheduled date, the Contractor may then redeploy the non-Key Personnel.

2.063 Re-assignment of Personnel at the State's Request

The State reserves the right to require the removal from the Project of Contractor personnel found, in the judgment of the State, to be unacceptable. The State's request must be written with reasonable detail outlining the reasons for the removal request. Additionally, the State's request must be based on legitimate, good-faith reasons. Replacement personnel for the removed person must be fully qualified for the position. If the State exercises this right, and the Contractor cannot immediately replace the removed personnel, the State agrees to an equitable adjustment in schedule or other terms that may be affected by the State's required removal. If any incident with removed personnel results in delay not reasonably anticipatable under the circumstances and which is attributable to the State, the applicable SLAs for the affected Service will not be counted for a time as agreed to by the parties.

2.064 Contractor Personnel Location

All staff assigned by Contractor to work on the Contract will perform their duties either primarily at Contractor's offices and facilities or at State facilities. Without limiting the generality of the foregoing, Key Personnel will, at a minimum, spend at least the amount of time on-site at State facilities as indicated in the applicable Statement of Work. Subject to availability, selected Contractor personnel may be assigned office space to be shared with State personnel.

2.065 Contractor Identification

Contractor employees must be clearly identifiable while on State property by wearing a State-issued badge, as required. Contractor employees are required to clearly identify themselves and the company they work for whenever making contact with State personnel by telephone or other means.

2.066 Cooperation with Third Parties

Contractor agrees to cause its personnel and the personnel of any Subcontractors to cooperate with the State and its agents and other contractors including the State's Quality Assurance personnel. As reasonably requested by the State in writing, the Contractor will provide to the State's agents and other contractors reasonable access to Contractor's Project personnel, systems and facilities to the extent the access relates to activities specifically associated with this Contract and will not interfere or jeopardize the safety or operation of the systems or facilities. The State acknowledges that Contractor's time schedule for the Contract is very specific and agrees not to unnecessarily or unreasonably interfere with, delay or otherwise impeded Contractor's performance under this Contract with the requests for access.

2.067 Contract Management Responsibilities

The Contractor will be required to assume responsibility for all contractual activities, whether or not that Contractor performs them. Further, the State will consider the Contractor to be the sole point of contact with regard to contractual matters, including payment of any and all charges resulting from the anticipated Contract. If any part of the work is to be subcontracted, the Contract must include a list of subcontractors, including firm name and address, contact person and a complete description of work to be subcontracted. The State reserves the right to approve subcontractors and to require the Contractor to replace subcontractors found to be unacceptable. The Contractor is totally responsible for adherence by the subcontractor to all provisions of the Contract. Any change in subcontractors must be approved by the State, in writing, prior to such change.

2.068 Contractor Return of State Equipment/Resources

The Contractor must return to the State any State-furnished equipment, facilities and other resources when no longer required for the Contract in the same condition as when provided by the State, reasonable wear and tear excepted.

2.070 Subcontracting by Contractor

2.071 Contractor full Responsibility

Contractor shall have full responsibility for the successful performance and completion of all of the Services and Deliverables. The State will consider Contractor to be the sole point of contact with regard to all contractual matters under this Contract, including payment of any and all charges for Services and Deliverables.

2.072 State Consent to delegation

Contractor shall not delegate any duties under this Contract to a Subcontractor unless the Department of Management and Budget, Purchasing Operations has given written consent to such delegation. The State shall have the right of prior written approval of all Subcontractors and to require Contractor to replace any Subcontractors found, in the reasonable judgment of the State, to be unacceptable. The State's request shall be written with reasonable detail outlining the reasons for the removal request. Additionally, the State's request shall be based on legitimate, good-faith reasons. Replacement Subcontractor(s) for the removed Subcontractor shall be fully qualified for the position. If the State exercises this right, and the Contractor cannot immediately replace the removed Subcontractor, the State will agree to an equitable adjustment in schedule or other terms that may be affected by the State's required removal. If any such incident with a removed Subcontractor results in delay not reasonable anticipatable under the circumstances and which is attributable to the State, the applicable SLA for the affected Work will not be counted in time agreed upon by the parties.

2.073 Subcontractor bound to Contract

In any subcontracts entered into by Contractor for the performance of the Services, Contractor shall require the Subcontractor, to the extent of the Services to be performed by the Subcontractor, to be bound to Contractor by the terms of this Contract and to assume toward Contractor all of the obligations and responsibilities that Contractor, by this Contract, assumes toward the State. The State reserves the right to receive copies of and review all subcontracts, although Contractor may delete or mask any proprietary information, including pricing, contained in such contracts before providing them to the State. The management of any Subcontractor will be the responsibility of Contractor, and Contractor shall remain responsible for the performance of its Subcontractors to the same extent as if Contractor had not subcontracted such performance. Contractor shall make all payments to Subcontractors or suppliers of Contractor. Except as otherwise agreed in writing by the State and Contractor, the State will not be obligated to direct payments for the Services other than to Contractor. The State's written approval of any Subcontractor engaged by Contractor to perform any obligation under this Contract shall not relieve Contractor of any obligations or performance required under this Contract. Attached as **Exhibit A** is a list of the Subcontractors, if any, approved by the State as of the execution of this Contract, together with a copy of the applicable subcontract.

2.074 Flow Down

Except where specifically approved in writing by the State on a case-by-case basis, Contractor shall flow down the obligations in **Sections 2.031, 2.060, 2.100, 2.110, 2.120, 2.130, 2.200** in all of its agreements with any Subcontractors.

2.075 Competitive Selection

The Contractor shall select subcontractors (including suppliers) on a competitive basis to the maximum practical extent consistent with the objectives and requirements of the Contract.

2.080 State Responsibilities

2.081 Equipment

The State will provide only the equipment and resources identified in the Statements of Work and other Contract Exhibits.

2.082 Facilities

The State must designate space as long as it is available and as provided in the Statement of Work, to house the Contractor's personnel whom the parties agree will perform the Services/Deliverables at State facilities (collectively, the "State Facilities"). The Contractor must have reasonable access to, and unless agreed otherwise by the parties in writing must observe and comply with all rules and regulations relating to each of the State Facilities (including hours of operation) used by the Contractor in the course of providing the Services. Contractor agrees that it will not, without the prior written consent of the State, use any State Facilities or access any State information systems provided for the Contractor's use, or to which the Contractor otherwise gains access in the course of performing the Services, for any purpose other than providing the Services to the State.

2.090 Security

2.091 Background Checks

On a case-by-case basis, the State may investigate the Contractor's personnel before they may have access to State facilities and systems. The scope of the background check is at the discretion of the State and the results will be used to determine Contractor personnel eligibility for working within State facilities and systems. The investigations will include Michigan State Police Background checks (ICHAT) and may include the National Crime Information Center (NCIC) Finger Prints. Proposed Contractor personnel may be required to complete and submit an RI-8 Fingerprint Card for the NCIC Finger Print Check. Any request for background checks will be initiated by the State and will be reasonably related to the type of work requested.

All Contractor personnel will also be expected to comply with the State's security and acceptable use policies for State IT equipment and resources. See http://www.michigan.gov/dit. Furthermore, Contractor personnel will be expected to agree to the State's security and acceptable use policies before the Contractor personnel will be accepted as a resource to perform work for the State. It is expected the Contractor will present these documents to the prospective employee before the Contractor presents the individual to the State as a proposed resource. Contractor staff will be expected to comply with all Physical Security procedures in place within the facilities where they are working.

2.092 Security Breach Notification

If the Contractor breaches this Section, the Contractor must (i) promptly cure any deficiencies and (ii) comply with any applicable federal and state laws and regulations pertaining to unauthorized disclosures. Contractor and the State will cooperate to mitigate, to the extent practicable, the effects of any breach, intrusion, or unauthorized use or disclosure. Contractor must report to the State in writing any use or disclosure of Confidential Information, whether suspected or actual, other than as provided for by the Contract within 10 days of becoming aware of the use or disclosure or the shorter time period as is reasonable under the circumstances.

2.093 PCI Data Security Requirements Deleted Not Applicable

2.100 Confidentiality

2.101 Confidentiality

Contractor and the State each acknowledge that the other possesses and will continue to possess confidential information that has been developed or received by it. As used in this Section, "Confidential Information" of Contractor must mean all non-public proprietary information of Contractor (other than Confidential Information of the State as defined below) which is marked confidential, restricted, proprietary or with a similar designation. "Confidential Information" of the State must mean any information which is retained in confidence by the State (or otherwise required to be held in confidence by the State under applicable federal, state and local laws and regulations) or which, in the case of tangible materials provided to Contractor by the State under its performance under this Contract, is marked as confidential, proprietary or with a similar designation by the State. "Confidential Information" excludes any information (including this Contract) that is publicly available under the Michigan FOIA.

2.102 Protection and Destruction of Confidential Information

The State and Contractor will each use at least the same degree of care to prevent disclosing to third parties the Confidential Information of the other as it employs to avoid unauthorized disclosure, publication or dissemination of its own confidential information of like character, but in no event less than reasonable care. Neither Contractor nor the State will (i) make any use of the Confidential Information of the other except as contemplated by this Contract, (ii) acquire any right in or assert any lien against the Confidential Information of the other, or (iii) if requested to do so, refuse for any reason to promptly return the other party's Confidential Information to the other party. Each party will limit disclosure of the other party's Confidential Information to employees and Subcontractors who must have access to fulfill the purposes of this Contract. Disclosure to, and use by, a Subcontractor is permissible where (A) use of a Subcontractor is authorized under this Contract, (B) the disclosure is necessary or otherwise naturally occurs in connection with work that is within the Subcontractor's scope of responsibility, and (C) Contractor obligates the Subcontractor in a written Contract to maintain the State's Confidential Information in confidence. At the State's request, any employee of Contractor and of any Subcontractor having access or continued access to the State's Confidential Information may be required to execute an acknowledgment that the employee has been advised of Contractor's and the Subcontractor's obligations under this Section and of the employee's obligation to Contractor or Subcontractor, as the case may be, to protect the Confidential Information from unauthorized use or disclosure.

Promptly upon termination or cancellation of the Contract for any reason, Contractor must certify to the State that Contractor has destroyed all State Confidential Information.

2.103 Exclusions

Notwithstanding the foregoing, the provisions of **Section 2.080** will not apply to any particular information which the State or Contractor can demonstrate (i) was, at the time of disclosure to it, in the public domain; (ii) after disclosure to it, is published or otherwise becomes part of the public domain through no fault of the receiving party; (iii) was in the possession of the receiving party at the time of disclosure to it without an obligation of confidentiality; (iv) was received after disclosure to it from a third party who had a lawful right to disclose the information to it without any obligation to restrict its further disclosure; or (v) was independently developed by the receiving party without reference to Confidential Information of the furnishing party. Further, the provisions of **Section 2.080** will not apply to any particular Confidential Information to the extent the receiving party is required by law to disclose the Confidential Information, provided that the receiving party (i) promptly provides the furnishing party with notice of the legal request, and (ii) assists the furnishing party in resisting or limiting the scope of the disclosure as reasonably requested by the furnishing party.

2.104 No Implied Rights

Nothing contained in this Section must be construed as obligating a party to disclose any particular Confidential Information to the other party, or as granting to or conferring on a party, expressly or impliedly, any right or license to the Confidential Information of the other party.

2.105 Respective Obligations

The parties' respective obligations under this Section must survive the termination or expiration of this Contract for any reason.

2.110 Records and Inspections

2.111 Inspection of Work Performed

The State's authorized representatives must at all reasonable times and with 10 days prior written request, have the right to enter Contractor's premises, or any other places, where the Services are being performed, and must have access, upon reasonable request, to interim drafts of Deliverables or work-in-progress. Upon 10 Days prior written notice and at all reasonable times, the State's representatives must be allowed to inspect, monitor, or otherwise evaluate the work being performed and to the extent that the access will not reasonably interfere or jeopardize the safety or operation of the systems or facilities. Contractor must provide all reasonable facilities and assistance for the State's representatives.

2.112 Examination of Records

For seven years after the Contractor provides any work under this Contract (the "Audit Period"), the State may examine and copy any of Contractor's books, records, documents and papers pertinent to establishing Contractor's compliance with the Contract and with applicable laws and rules. The State must notify the Contractor 20 days before examining the Contractor's books and records. The State does not have the right to review any information deemed confidential by the Contractor to the extent access would require the confidential information to become publicly available. This provision also applies to the books, records, accounts, documents and papers, in print or electronic form, of any parent, affiliated or subsidiary organization of Contractor, or any Subcontractor of Contractor performing services in connection with the Contract.

2.113 Retention of Records

Contractor must maintain at least until the end of the Audit Period all pertinent financial and accounting records (including time sheets and payroll records, and information pertaining to the Contract and to the Services, equipment, and commodities provided under the Contract) pertaining to the Contract according to generally accepted accounting principles and other procedures specified in this Section. Financial and accounting records must be made available, upon request, to the State at any time during the Audit Period. If an audit, litigation, or other action involving Contractor's records is initiated before the end of the Audit Period, the records must be retained until all issues arising out of the audit, litigation, or other action are resolved or until the end of the Audit Period, whichever is later.

2.114 Audit Resolution

If necessary, the Contractor and the State will meet to review each audit report promptly after issuance. The Contractor will respond to each audit report in writing within 30 days from receipt of the report, unless a shorter response time is specified in the report. The Contractor and the State must develop, agree upon and monitor an action plan to promptly address and resolve any deficiencies, concerns, and/or recommendations in the audit report.

2.115 Errors

(a) If the audit demonstrates any errors in the documents provided to the State, then the amount in error must be reflected as a credit or debit on the next invoice and in subsequent invoices until the amount is paid or refunded in full. However, a credit or debit may not be carried for more than four invoices. If a balance remains after four invoices, then the remaining amount will be due as a payment or refund within 45 days of the last quarterly invoice that the balance appeared on or termination of the contract, whichever is earlier.
(b) In addition to other available remedies, the difference between the payment received and the correct payment amount is greater than 10%, then the Contractor must pay all of the reasonable costs of the audit.

2.120 Warranties

2.121 Warranties and Representations

The Contractor represents and warrants:

(a) It is capable in all respects of fulfilling and must fulfill all of its obligations under this Contract. The performance of all obligations under this Contract must be provided in a timely, professional, and workman-like manner and must meet the performance and operational standards required under this Contract.

(b) The Contract Appendices, Attachments and Exhibits identify the equipment and software and services necessary for the Deliverable(s) to perform and Services to operate in compliance with the Contract's requirements and other standards of performance.

(c) It is the lawful owner or licensee of any Deliverable licensed or sold to the State by Contractor or developed by Contractor under this Contract, and Contractor has all of the rights necessary to convey to the State the ownership rights or licensed use, as applicable, of any and all Deliverables. None of the

Deliverables provided by Contractor to the State under this Contract, nor their use by the State, will infringe the patent, copyright, trade secret, or other proprietary rights of any third party.

(d) If, under this Contract, Contractor procures any equipment, software or other Deliverable for the State (including equipment, software and other Deliverables manufactured, re-marketed or otherwise sold by Contractor under Contractor's name), then in addition to Contractor's other responsibilities with respect to the items in this Contract, Contractor must assign or otherwise transfer to the State or its designees, or afford the State the benefits of, any manufacturer's warranty for the Deliverable.

(e) The contract signatory has the power and authority, including any necessary corporate authorizations, necessary to enter into this Contract, on behalf of Contractor.

(f) It is qualified and registered to transact business in all locations where required.

(g) Neither the Contractor nor any Affiliates, nor any employee of either, has, must have, or must acquire, any contractual, financial, business, or other interest, direct or indirect, that would conflict in any manner or degree with Contractor's performance of its duties and responsibilities to the State under this Contract or otherwise create an appearance of impropriety with respect to the award or performance of this Agreement. Contractor must notify the State about the nature of the conflict or appearance of impropriety within two days of learning about it.

(h) Neither Contractor nor any Affiliates, nor any employee of either has accepted or must accept anything of value based on an understanding that the actions of the Contractor or Affiliates or employee on behalf of the State would be influenced. Contractor must not attempt to influence any State employee by the direct or indirect offer of anything of value.

(i) Neither Contractor nor any Affiliates, nor any employee of either has paid or agreed to pay any person, other than bona fide employees and consultants working solely for Contractor or the Affiliate, any fee, commission, percentage, brokerage fee, gift, or any other consideration, contingent upon or resulting from the award or making of this Contract.

(j) The prices proposed by Contractor were arrived at independently, without consultation, communication, or agreement with any other bidder for the purpose of restricting competition; the prices quoted were not knowingly disclosed by Contractor to any other bidder; and no attempt was made by Contractor to induce any other person to submit or not submit a proposal for the purpose of restricting competition.

(k) All financial statements, reports, and other information furnished by Contractor to the State as part of its response to the RFP or otherwise in connection with the award of this Contract fairly and accurately represent the business, properties, financial condition, and results of operations of Contractor as of the respective dates, or for the respective periods, covered by the financial statements, reports, other information. Since the respective dates or periods covered by the financial statements, reports, or other information, there have been no material adverse change in the business, properties, financial condition, or results of operations of Contractor.

(l) All written information furnished to the State by or for the Contractor in connection with this Contract, including its bid, is true, accurate, and complete, and contains no untrue statement of material fact or omits any material fact necessary to make the information not misleading.

(m) It is not in material default or breach of any other contract or agreement that it may have with the State or any of its departments, commissions, boards, or agencies. Contractor further represents and warrants that it has not been a party to any contract with the State or any of its departments that was terminated by the State or the department within the previous five years for the reason that Contractor failed to perform or otherwise breached an obligation of the contract.

(n) If any of the certifications, representations, or disclosures made in the Contractor's original bid response change after contract award, the Contractor is required to report those changes immediately to the Department of Management and Budget, Purchasing Operations.

2.122 Warranty of Merchantability

Goods provided by Contractor under this agreement shall be merchantable. All goods provided under this Contract shall be of good quality within the description given by the State, shall be fit for their ordinary purpose, shall be adequately contained and packaged within the description given by the State, shall conform to the agreed upon specifications, and shall conform to the affirmations of fact made by the Contractor or on the container or label.

2.123 Warranty of Fitness for a Particular Purpose

When the Contractor has reason to know or knows any particular purpose for which the goods are required, and the State is relying on the Contractor's skill or judgment to select or furnish suitable goods, there is a warranty that the goods are fit for such purpose.

2.124 Warranty of Title

Contractor shall, in providing goods to the State, convey good title in those goods, whose transfer is right and lawful. All goods provided by Contractor shall be delivered free from any security interest, lien, or encumbrance of which the State, at the time of contracting, has no knowledge. Goods provided by Contractor, under this Contract, shall be delivered free of any rightful claim of any third person by of infringement or the like.

2.125 Equipment Warranty

To the extent Contractor is responsible under this Contract for maintaining equipment/system(s), Contractor represents and warrants that it will maintain the equipment/system(s) in good operating condition and will undertake all repairs and preventive maintenance according to the applicable manufacturer's recommendations for the period specified in this Contract.

The Contractor represents and warrants that the equipment/system(s) are in good operating condition and operate and perform to the requirements and other standards of performance contained in this Contract, when installed, at the time of Final Acceptance by the State, and for a period of one year commencing upon the first day following Final Acceptance.

Within one business days of notification from the State, the Contractor must adjust, repair or replace all equipment that is defective or not performing in compliance with the Contract. The Contractor must assume all costs for replacing parts or units and their installation including transportation and delivery fees, if any.

The Contractor must provide a toll-free telephone number to allow the State to report equipment failures and problems to be remedied by the Contractor.

The Contractor agrees that all warranty service it provides under this Contract must be performed by Original Equipment Manufacturer (OEM) trained, certified and authorized technicians.

The Contractor is the sole point of contact for warranty service. The Contractor warrants that it will pass through to the State any warranties obtained or available from the original equipment manufacturer, including any replacement, upgraded, or additional equipment warranties.

2.126 Equipment to be New

If applicable, all equipment provided under this Contract by Contractor shall be new where Contractor has knowledge regarding whether the equipment is new or assembled from new or serviceable used parts that are like new in performance or has the option of selecting one or the other. Equipment that is assembled from

new or serviceable used parts that are like new in performance is acceptable where Contractor does not have knowledge or the ability to select one or other, unless specifically agreed otherwise in writing by the State.

2.127 Prohibited Products

The State will not accept salvage, distressed, outdated or discontinued merchandise. Shipping of such merchandise to any State agency, as a result of an order placed against the Contract, shall be considered default by the Contractor of the terms and conditions of the Contract and may result in cancellation of the Contract by the State. The brand and product number offered for all items shall remain consistent for the term of the Contract, unless Purchasing Operations has approved a change order pursuant to **Section 2.024**.

2.128 Consequences For Breach

In addition to any remedies available in law, if the Contractor breaches any of the warranties contained in this section, the breach may be considered as a default in the performance of a material obligation of this Contract.

2.130 Insurance

2.131 Liability Insurance

The Contractor must provide proof of the minimum levels of insurance coverage as indicated below. The insurance must protect the State from claims which may arise out of or result from the Contractor's performance of services under the terms of this Contract, whether the services are performed by the Contractor, or by any subcontractor, or by anyone directly or indirectly employed by any of them, or by anyone for whose acts they may be liable.

The Contractor waives all rights against the State of Michigan, its departments, divisions, agencies, offices, commissions, officers, employees and agents for recovery of damages to the extent these damages are covered by the insurance policies the Contractor is required to maintain under this Contract.

All insurance coverages provided relative to this Contract/Purchase Order are PRIMARY and NON-CONTRIBUTING to any comparable liability insurance (including self-insurances) carried by the State.

The insurance must be written for not less than any minimum coverage specified in this Contract or required by law, whichever is greater.

The insurers selected by Contractor must have an A.M. Best rating of A or better, or as otherwise approved in writing by the State, or if the ratings are no longer available, with a comparable rating from a recognized insurance rating agency. All policies of insurance required in this Contract must be issued by companies that have been approved to do business in the State.
See www.michigan.gov/dleg.

Where specific limits are shown, they are the minimum acceptable limits. If Contractor's policy contains higher limits, the State must be entitled to coverage to the extent of the higher limits.

The Contractor is required to pay for and provide the type and amount of insurance checked ☑ below:

☑ 1. Commercial General Liability with the following minimum coverage:

$2,000,000 General Aggregate Limit other than Products/Completed Operations
$2,000,000 Products/Completed Operations Aggregate Limit
$1,000,000 Personal & Advertising Injury Limit
$1,000,000 Each Occurrence Limit

The Contractor must list the State of Michigan, its departments, divisions, agencies, offices, commissions, officers, employees and agents as ADDITIONAL INSUREDS on the Commercial General Liability

certificate. The Contractor also agrees to provide evidence that insurance policies contain a waiver of subrogation by the insurance company.

☑ 2. If a motor vehicle is used to provide services or products under this Contract, the Contractor must have vehicle liability insurance on any auto including owned, hired and non-owned vehicles used in Contractor‘s business for bodily injury and property damage as required by law.

The Contractor must list the State of Michigan, its departments, divisions, agencies, offices, commissions, officers, employees and agents as ADDITIONAL INSUREDS on the vehicle liability certificate. The Contractor also agrees to provide evidence that insurance policies contain a waiver of subrogation by the insurance company.

☑ 3. Workers’ compensation coverage must be provided according to applicable laws governing the employees and employers work activities in the state of the Contractor’s domicile. If the applicable coverage is provided by a self-insurer, proof must be provided of approved self-insured authority by the jurisdiction of domicile. For employees working outside of the state of qualification, Contractor must provide appropriate certificates of insurance proving mandated coverage levels for the jurisdictions where the employees’ activities occur.

Any certificates of insurance received must also provide a list of states where the coverage is applicable.

The Contractor also agrees to provide evidence that insurance policies contain a waiver of subrogation by the insurance company. This provision must not be applicable where prohibited or limited by the laws of the jurisdiction in which the work is to be performed.

☑ 4. Employers liability insurance with the following minimum limits:

$100,000 each accident
$100,000 each employee by disease
$500,000 aggregate disease

☐ 5. Employee Fidelity, including Computer Crimes, insurance naming the State as a loss payee, providing coverage for direct loss to the State and any legal liability of the State arising out of or related to fraudulent or dishonest acts committed by the employees of Contractor or its Subcontractors, acting alone or in collusion with others, in a minimum amount of one million dollars ($1,000,000.00) with a maximum deductible of fifty thousand dollars ($50,000.00).

☐ 6. Umbrella or Excess Liability Insurance in a minimum amount of ten million dollars ($10,000,000.00), which must apply, at a minimum, to the insurance required in Subsection 1 (Commercial General Liability) above.

☐ 7. Professional Liability (Errors and Omissions) Insurance with the following minimum coverage: three million dollars ($3,000,000.00) each occurrence and three million dollars ($3,000,000.00) annual aggregate.

☐ 8. Fire and Personal Property Insurance covering against any loss or damage to the office space used by Contractor for any reason under this Contract, and the equipment, software and other contents of the office space, including without limitation, those contents used by Contractor to provide the Services to the State, up to its replacement value, where the office space and its contents are under the care, custody and control of Contractor. The policy must cover all risks of direct physical loss or damage, including without limitation, flood and earthquake coverage and coverage for computer hardware and software. The State must be endorsed on the policy as a loss payee as its interests appear.

2.132 Subcontractor Insurance Coverage

Except where the State has approved in writing a Contractor subcontract with other insurance provisions, Contractor must require all of its Subcontractors under this Contract to purchase and maintain the insurance coverage as described in this Section for the Contractor in connection with the performance of work by those Subcontractors. Alternatively, Contractor may include any Subcontractors under Contractor's insurance on the coverage required in this Section. Subcontractor(s) must fully comply with the insurance coverage required in this Section. Failure of Subcontractor(s) to comply with insurance requirements does not limit Contractor's liability or responsibility.

2.133 Certificates of Insurance and Other Requirements

Contractor must furnish to DMB-PurchOps, certificate(s) of insurance verifying insurance coverage or providing satisfactory evidence of self-insurance as required in this Section (the "Certificates"). The Certificate must be on the standard "accord" form or equivalent. **THE CONTRACT OR PURCHASE ORDER NO. MUST BE SHOWN ON THE CERTIFICATE OF INSURANCE TO ASSURE CORRECT FILING.** All Certificate(s) are to be prepared and submitted by the Insurance Provider. All Certificate(s) must contain a provision indicating that coverages afforded under the policies WILL NOT BE CANCELLED, MATERIALLY CHANGED, OR NOT RENEWED without 30 days prior written notice, except for 10 days for non-payment of premium, having been given to the Director of Purchasing Operations, Department of Management and Budget. The notice must include the Contract or Purchase Order number affected. Before the Contract is signed, and not less than 20 days before the insurance expiration date every year thereafter, the Contractor must provide evidence that the State and its agents, officers and employees are listed as additional insureds under each commercial general liability and commercial automobile liability policy. In the event the State approves the representation of the State by the insurer's attorney, the attorney may be required to be designated as a Special Assistant Attorney General by the Attorney General of the State of Michigan.

The Contractor must maintain all required insurance coverage throughout the term of the Contract and any extensions and, in the case of claims-made Commercial General Liability policies, must secure tail coverage for at least three years following the expiration or termination for any reason of this Contract. The minimum limits of coverage specified above are not intended, and must not be construed, to limit any liability or indemnity of Contractor under this Contract to any indemnified party or other persons. Contractor is responsible for all deductibles with regard to the insurance. If the Contractor fails to pay any premium for required insurance as specified in this Contract, or if any insurer cancels or significantly reduces any required insurance as specified in this Contract without the State's written consent, then the State may, after the State has given the Contractor at least 30 days written notice, pay the premium or procure similar insurance coverage from another company or companies. The State may deduct any part of the cost from any payment due the Contractor, or the Contractor must pay that cost upon demand by the State.

2.140 Indemnification

2.141 General Indemnification

To the extent permitted by law, the Contractor must indemnify, defend and hold harmless the State from liability, including all claims and losses, and all related costs and expenses (including reasonable attorneys' fees and costs of investigation, litigation, settlement, judgments, interest and penalties), accruing or resulting to any person, firm or corporation that may be injured or damaged by the Contractor in the performance of this Contract and that are attributable to the negligence or tortious acts of the Contractor or any of its subcontractors, or by anyone else for whose acts any of them may be liable.

2.142 Code Indemnification

To the extent permitted by law, the Contractor shall indemnify, defend and hold harmless the State from any claim, loss, or expense arising from Contractor's breach of the No Surreptitious Code Warranty.

2.143 Employee Indemnification

In any claims against the State of Michigan, its departments, divisions, agencies, sections, commissions, officers, employees and agents, by any employee of the Contractor or any of its subcontractors, the indemnification obligation under the Contract must not be limited in any way by the amount or type of damages, compensation or benefits payable by or for the Contractor or any of its subcontractors under worker's disability compensation acts, disability benefit acts or other employee benefit acts. This indemnification clause is intended to be comprehensive. Any overlap in provisions, or the fact that greater specificity is provided as to some categories of risk, is not intended to limit the scope of indemnification under any other provisions.

2.144 Patent/Copyright Infringement Indemnification

To the extent permitted by law, the Contractor must indemnify, defend and hold harmless the State from and against all losses, liabilities, damages (including taxes), and all related costs and expenses (including reasonable attorneys' fees and costs of investigation, litigation, settlement, judgments, interest and penalties) incurred in connection with any action or proceeding threatened or brought against the State to the extent that the action or proceeding is based on a claim that any piece of equipment, software, commodity or service supplied by the Contractor or its subcontractors, or the operation of the equipment, software, commodity or service, or the use or reproduction of any documentation provided with the equipment, software, commodity or service infringes any United States patent, copyright, trademark or trade secret of any person or entity, which is enforceable under the laws of the United States.

In addition, should the equipment, software, commodity, or service, or its operation, become or in the State's or Contractor's opinion be likely to become the subject of a claim of infringement, the Contractor must at the Contractor's sole expense (i) procure for the State the right to continue using the equipment, software, commodity or service or, if the option is not reasonably available to the Contractor, (ii) replace or modify to the State's satisfaction the same with equipment, software, commodity or service of equivalent function and performance so that it becomes non-infringing, or, if the option is not reasonably available to Contractor, (iii) accept its return by the State with appropriate credits to the State against the Contractor's charges and reimburse the State for any losses or costs incurred as a consequence of the State ceasing its use and returning it.

Notwithstanding the foregoing, the Contractor has no obligation to indemnify or defend the State for, or to pay any costs, damages or attorneys' fees related to, any claim based upon (i) equipment developed based on written specifications of the State; (ii) use of the equipment in a configuration other than implemented or approved in writing by the Contractor, including, but not limited to, any modification of the equipment by the State; or (iii) the combination, operation, or use of the equipment with equipment or software not supplied by the Contractor under this Contract.

2.145 Continuation of Indemnification Obligations

The Contractor's duty to indemnify under this Section continues in full force and effect, notwithstanding the expiration or early cancellation of the Contract, with respect to any claims based on facts or conditions that occurred before expiration or cancellation.

2.146 Indemnification Procedures

The procedures set forth below must apply to all indemnity obligations under this Contract.

(a) After the State receives notice of the action or proceeding involving a claim for which it will seek indemnification, the State must promptly notify Contractor of the claim in writing and take or assist Contractor in taking, as the case may be, any reasonable action to avoid the imposition of a default judgment against Contractor. No failure to notify the Contractor relieves the Contractor of its indemnification obligations except to the extent that the Contractor can prove damages attributable to the failure. Within 10 days following receipt of written notice from the State relating to any claim, the Contractor must notify the State in writing whether Contractor agrees to assume control of the defense and settlement of that claim (a "Notice of Election"). After notifying Contractor of a claim and before the State receiving Contractor's

Notice of Election, the State is entitled to defend against the claim, at the Contractor's expense, and the Contractor will be responsible for any reasonable costs incurred by the State in defending against the claim during that period.

(b) If Contractor delivers a Notice of Election relating to any claim: (i) the State is entitled to participate in the defense of the claim and to employ counsel at its own expense to assist in the handling of the claim and to monitor and advise the State about the status and progress of the defense; (ii) the Contractor must, at the request of the State, demonstrate to the reasonable satisfaction of the State, the Contractor's financial ability to carry out its defense and indemnity obligations under this Contract; (iii) the Contractor must periodically advise the State about the status and progress of the defense and must obtain the prior written approval of the State before entering into any settlement of the claim or ceasing to defend against the claim and (iv) to the extent that any principles of Michigan governmental or public law may be involved or challenged, the State has the right, at its own expense, to control the defense of that portion of the claim involving the principles of Michigan governmental or public law. But the State may retain control of the defense and settlement of a claim by notifying the Contractor in writing within 10 days after the State's receipt of Contractor's information requested by the State under clause (ii) of this paragraph if the State determines that the Contractor has failed to demonstrate to the reasonable satisfaction of the State the Contractor's financial ability to carry out its defense and indemnity obligations under this Section. Any litigation activity on behalf of the State, or any of its subdivisions under this Section, must be coordinated with the Department of Attorney General. In the event the insurer's attorney represents the State under this Section, the insurer's attorney may be required to be designated as a Special Assistant Attorney General by the Attorney General of the State of Michigan.

(c) If Contractor does not deliver a Notice of Election relating to any claim of which it is notified by the State as provided above, the State may defend the claim in the manner as it may deem appropriate, at the cost and expense of Contractor. If it is determined that the claim was one against which Contractor was required to indemnify the State, upon request of the State, Contractor must promptly reimburse the State for all the reasonable costs and expenses.

2.150 Termination/Cancellation

2.151 Notice and Right to Cure

If the Contractor breaches the contract, and the State in its sole discretion determines that the breach is curable, then the State will provide the Contractor with written notice of the breach and a time period (not less than 30 days) to cure the Breach. The notice of breach and opportunity to cure is inapplicable for successive or repeated breaches or if the State determines in its sole discretion that the breach poses a serious and imminent threat to the health or safety of any person or the imminent loss, damage, or destruction of any real or tangible personal property.

2.152 Termination for Cause

(a) The State may terminate this contract, for cause, by notifying the Contractor in writing, if the Contractor (i) breaches any of its material duties or obligations under this Contract (including a Chronic Failure to meet any particular SLA), or (ii) fails to cure a breach within the time period specified in the written notice of breach provided by the State

(b) If this Contract is terminated for cause, the Contractor must pay all costs incurred by the State in terminating this Contract, including but not limited to, State administrative costs, reasonable attorneys' fees and court costs, and any reasonable additional costs the State may incur to procure the Services/Deliverables required by this Contract from other sources. Re-procurement costs are not consequential, indirect or incidental damages, and cannot be excluded by any other terms otherwise included in this Contract, provided the costs are not in excess of 50% more than the prices for the Service/Deliverables provided under this Contract.

(c) If the State chooses to partially terminate this Contract for cause, charges payable under this Contract will be equitably adjusted to reflect those Services/Deliverables that are terminated and the State must pay for all Services/Deliverables for which Final Acceptance has been granted provided up to the termination date. Services and related provisions of this Contract that are terminated for cause must cease on the effective date of the termination.

(d) If the State terminates this Contract for cause under this Section, and it is determined, for any reason, that Contractor was not in breach of contract under the provisions of this section, that termination for cause must be deemed to have been a termination for convenience, effective as of the same date, and the rights and obligations of the parties must be limited to that otherwise provided in this Contract for a termination for convenience.

2.153 Termination for Convenience

The State may terminate this Contract for its convenience, in whole or part, if the State determines that a termination is in the State's best interest. Reasons for the termination must be left to the sole discretion of the State and may include, but not necessarily be limited to (a) the State no longer needs the Services or products specified in the Contract, (b) relocation of office, program changes, changes in laws, rules, or regulations make implementation of the Services no longer practical or feasible, (c) unacceptable prices for Additional Services or New Work requested by the State, or (d) falsification or misrepresentation, by inclusion or non-inclusion, of information material to a response to any RFP issued by the State. The State may terminate this Contract for its convenience, in whole or in part, by giving Contractor written notice at least 30 days before the date of termination. If the State chooses to terminate this Contract in part, the charges payable under this Contract must be equitably adjusted to reflect those Services/Deliverables that are terminated. Services and related provisions of this Contract that are terminated for cause must cease on the effective date of the termination.

2.154 Termination for Non-Appropriation

(a) Contractor acknowledges that, if this Contract extends for several fiscal years, continuation of this Contract is subject to appropriation or availability of funds for this Contract. If funds to enable the State to effect continued payment under this Contract are not appropriated or otherwise made available, the State must terminate this Contract and all affected Statements of Work, in whole or in part, at the end of the last period for which funds have been appropriated or otherwise made available by giving written notice of termination to Contractor. The State must give Contractor at least 30 days advance written notice of termination for non-appropriation or unavailability (or the time as is available if the State receives notice of the final decision less than 30 days before the funding cutoff).

(b) If funding for the Contract is reduced by law, or funds to pay Contractor for the agreed-to level of the Services or production of Deliverables to be provided by Contractor are not appropriated or otherwise unavailable, the State may, upon 30 days written notice to Contractor, reduce the level of the Services or the change the production of Deliverables in the manner and for the periods of time as the State may elect. The charges payable under this Contract will be equitably adjusted to reflect any equipment, services or commodities not provided by reason of the reduction.

(c) If the State terminates this Contract, eliminates certain Deliverables, or reduces the level of Services to be provided by Contractor under this Section, the State must pay Contractor for all Work-in-Process performed through the effective date of the termination or reduction in level, as the case may be and as determined by the State, to the extent funds are available. This Section will not preclude Contractor from reducing or stopping Services/Deliverables or raising against the State in a court of competent jurisdiction, any claim for a shortfall in payment for Services performed or Deliverables finally accepted before the effective date of termination.

2.155 Termination for Criminal Conviction

The State may terminate this Contract immediately and without further liability or penalty in the event Contractor, an officer of Contractor, or an owner of a 25% or greater share of Contractor is convicted of a criminal offense related to a State, public or private Contract or subcontract.

2.156 Termination for Approvals Rescinded

The State may terminate this Contract if any final administrative or judicial decision or adjudication disapproves a previously approved request for purchase of personal services under Constitution 1963, Article 11, § 5, and Civil Service Rule 7-1. In that case, the State will pay the Contractor for only the work completed to that point under the Contract. Termination may be in whole or in part and may be immediate as of the date of the written notice to Contractor or may be effective as of the date stated in the written notice.

2.157 Rights and Obligations upon Termination

(a) If the State terminates this Contract for any reason, the Contractor must (a) stop all work as specified in the notice of termination, (b) take any action that may be necessary, or that the State may direct, for preservation and protection of Deliverables or other property derived or resulting from this Contract that may be in Contractor's possession, (c) return all materials and property provided directly or indirectly to Contractor by any entity, agent or employee of the State, (d) transfer title in, and deliver to, the State, unless otherwise directed, all Deliverables intended to be transferred to the State at the termination of the Contract and which are resulting from the Contract (which must be provided to the State on an "As-Is" basis except to the extent the amounts paid by the State in respect of the items included compensation to Contractor for the provision of warranty services in respect of the materials), and (e) take any action to mitigate and limit any potential damages, or requests for Contractor adjustment or termination settlement costs, to the maximum practical extent, including terminating or limiting as otherwise applicable those subcontracts and outstanding orders for material and supplies resulting from the terminated Contract.

(b) If the State terminates this Contract before its expiration for its own convenience, the State must pay Contractor for all charges due for Services provided before the date of termination and, if applicable, as a separate item of payment under this Contract, for Work In Process, on a percentage of completion basis at the level of completion determined by the State. All completed or partially completed Deliverables prepared by Contractor under this Contract, at the option of the State, becomes the State's property, and Contractor is entitled to receive equitable fair compensation for the Deliverables. Regardless of the basis for the termination, the State is not obligated to pay, or otherwise compensate, Contractor for any lost expected future profits, costs or expenses incurred with respect to Services not actually performed for the State.

(c) Upon a good faith termination, the State may assume, at its option, any subcontracts and agreements for services and deliverables provided under this Contract, and may further pursue completion of the Services/Deliverables under this Contract by replacement contract or otherwise as the State may in its sole judgment deem expedient.

2.158 Reservation of Rights

Any termination of this Contract or any Statement of Work issued under it by a party must be with full reservation of, and without prejudice to, any rights or remedies otherwise available to the party with respect to any claims arising before or as a result of the termination.

2.160 Termination by Contractor

2.161 Termination by Contractor

If the State breaches the Contract, and the Contractor in its sole discretion determines that the breach is curable, then the Contractor will provide the State with written notice of the breach and a time period (not less than 30 days) to cure the breach. The Notice of Breach and opportunity to cure is inapplicable for successive and repeated breaches.

The Contractor may terminate this Contract if the State (i) materially breaches its obligation to pay the Contractor undisputed amounts due and owing under this Contract, (ii) breaches its other obligations under this Contract to an extent that makes it impossible or commercially impractical for the Contractor to perform the Services, or (iii) does not cure the breach within the time period specified in a written notice of breach. But the Contractor must discharge its obligations under **Section 2.160** before it terminates the Contract.

2.170 Transition Responsibilities

2.171 Contractor Transition Responsibilities

If the State terminates this contract, for convenience or cause, or if the Contract is otherwise dissolved, voided, rescinded, nullified, expires or rendered unenforceable, the Contractor agrees to comply with direction provided by the State to assist in the orderly transition of equipment, services, software, leases, etc. to the State or a third party designated by the State. If this Contract expires or terminates, the Contractor agrees to make all reasonable efforts to effect an orderly transition of services within a reasonable period of time that in no event will exceed 30 days. These efforts must include, but are not limited to, those listed in **Sections 2.141, 2.142, 2.143, 2.144, and 2.145.**

2.172 Contractor Personnel Transition

The Contractor must work with the State, or a specified third party, to develop a transition plan setting forth the specific tasks and schedule to be accomplished by the parties, to effect an orderly transition. The Contractor must allow as many personnel as practicable to remain on the job to help the State, or a specified third party, maintain the continuity and consistency of the services required by this Contract. In addition, during or following the transition period, in the event the State requires the Services of the Contractor's subcontractors or vendors, as necessary to meet its needs, Contractor agrees to reasonably, and with good-faith, work with the State to use the Services of Contractor's subcontractors or vendors. Contractor will notify all of Contractor's subcontractors of procedures to be followed during transition.

2.173 Contractor Information Transition

The Contractor agrees to provide reasonable detailed specifications for all Services/Deliverables needed by the State, or specified third party, to properly provide the Services/Deliverables required under this Contract. The Contractor will provide the State with asset management data generated from the inception of this Contract through the date on which this Contractor is terminated in a comma-delineated format unless otherwise requested by the State. The Contractor will deliver to the State any remaining owed reports and documentation still in Contractor's possession subject to appropriate payment by the State.

2.174 Contractor Software Transition

The Contractor must reasonably assist the State in the acquisition of any Contractor software required to perform the Services/use the Deliverables under this Contract. This must include any documentation being used by the Contractor to perform the Services under this Contract. If the State transfers any software licenses to the Contractor, those licenses must, upon expiration of the Contract, transfer back to the State at their current revision level. Upon notification by the State, Contractor may be required to freeze all non-critical changes to Deliverables/Services.

2.175 Transition Payments

If the transition results from a termination for any reason, reimbursement must be governed by the termination provisions of this Contract. If the transition results from expiration, the Contractor will be reimbursed for all reasonable transition costs (i.e. costs incurred within the agreed period after contract expiration that result from transition operations) at the rates agreed upon by the State. The Contractor will prepare an accurate accounting from which the State and Contractor may reconcile all outstanding accounts.

2.176 State Transition Responsibilities

In the event that this Contract is terminated, dissolved, voided, rescinded, nullified, or otherwise rendered unenforceable, the State agrees to perform the following obligations, and any others upon which the State and the Contractor agree:

(a) Reconciling all accounts between the State and the Contractor;
(b) Completing any pending post-project reviews.

2.180 Stop Work

2.181 Stop Work Orders

The State may, at any time, by written stop work order to Contractor, require that Contractor stop all, or any part, of the work called for by the Contract for a period of up to 90 calendar days after the stop work order is delivered to Contractor, and for any further period to which the parties may agree. The stop work order must be identified as a stop work order and must indicate that it is issued under this **Section 2.150**. Upon receipt of the stop work order, Contractor must immediately comply with its terms and take all reasonable steps to minimize incurring costs allocable to the work covered by the stop work order during the period of work stoppage. Within the period of the stop work order, the State must either: (a) cancel the stop work order; or (b) terminate the work covered by the stop work order as provided in **Section 2.130**.

2.182 Cancellation or Expiration of Stop Work Order

The Contractor must resume work if the State cancels a Stop Work Order or if it expires. The parties will agree upon an equitable adjustment in the delivery schedule, the Contract price, or both, and the Contract must be modified, in writing, accordingly, if: (a) the stop work order results in an increase in the time required for, or in Contractor's costs properly allocable to, the performance of any part of the Contract; and (b) Contractor asserts its right to an equitable adjustment within 30 calendar days after the end of the period of work stoppage; provided that, if the State decides the facts justify the action, the State may receive and act upon a Contractor proposal submitted at any time before final payment under the Contract. Any adjustment will conform to the requirements of **Section 2.024**.

2.183 Allowance of Contractor Costs

If the stop work order is not canceled and the work covered by the stop work order is terminated for reasons other than material breach, the termination must be deemed to be a termination for convenience under **Section 2.130**, and the State will pay reasonable costs resulting from the stop work order in arriving at the termination settlement. For the avoidance of doubt, the State is not be liable to Contractor for loss of profits because of a stop work order issued under this **Section 2.150.**

2.190 Dispute Resolution

2.191 In General

Any claim, counterclaim, or dispute between the State and Contractor arising out of or relating to the Contract or any Statement of Work must be resolved as follows. For all Contractor claims seeking an increase in the amounts payable to Contractor under the Contract, or the time for Contractor's performance, Contractor must submit a letter, together with all data supporting the claims, executed by Contractor's Contract Administrator or the Contract Administrator's designee certifying that (a) the claim is made in good faith, (b) the amount claimed accurately reflects the adjustments in the amounts payable to Contractor or the time for Contractor's performance for which Contractor believes the State is liable and covers all costs of every type to which Contractor is entitled from the occurrence of the claimed event, and (c) the claim and the supporting data are current and complete to Contractor's best knowledge and belief.

2.192 Informal Dispute Resolution

(a) All disputes between the parties must be resolved under the Contract Management procedures in this Contract. If the parties are unable to resolve any disputes after compliance with the processes, the parties must meet with the Director of Purchasing Operations, DMB, or designee, for the purpose of attempting to resolve the dispute without the need for formal legal proceedings, as follows:

(i) The representatives of Contractor and the State must meet as often as the parties reasonably deem necessary to gather and furnish to each other all information with respect to the matter in issue which the parties believe to be appropriate and germane in connection with its resolution. The representatives must discuss the problem and negotiate in good faith in an effort to resolve the dispute without the necessity of any formal proceeding.

(ii) During the course of negotiations, all reasonable requests made by one party to another for non-privileged information reasonably related to the Contract will be honored in order that each of the parties may be fully advised of the other's position.

(iii) The specific format for the discussions will be left to the discretion of the designated State and Contractor representatives, but may include the preparation of agreed upon statements of fact or written statements of position.

(iv) Following the completion of this process within 60 calendar days, the Director of Purchasing Operations, DMB, or designee, must issue a written opinion regarding the issue(s) in dispute within 30 calendar days. The opinion regarding the dispute must be considered the State's final action and the exhaustion of administrative remedies.

(b) This Section will not be construed to prevent either party from instituting, and a party is authorized to institute, formal proceedings earlier to avoid the expiration of any applicable limitations period, to preserve a superior position with respect to other creditors, or under **Section 2.163**.

(c) The State will not mediate disputes between the Contractor and any other entity, except state agencies, concerning responsibility for performance of work under the Contract.

2.193 Injunctive Relief

The only circumstance in which disputes between the State and Contractor will not be subject to the provisions of **Section 2.162** is where a party makes a good faith determination that a breach of the terms of the Contract by the other party is the that the damages to the party resulting from the breach will be so immediate, so large or severe and so incapable of adequate redress after the fact that a temporary restraining order or other immediate injunctive relief is the only adequate remedy.

2.194 Continued Performance

Each party agrees to continue performing its obligations under the Contract while a dispute is being resolved except to the extent the issue in dispute precludes performance (dispute over payment must not be deemed to preclude performance) and without limiting either party's right to terminate the Contract as provided in **Section 2.150**, as the case may be.

2.200 Federal and State Contract Requirements

2.201 Nondiscrimination

In the performance of the Contract, Contractor agrees not to discriminate against any employee or applicant for employment, with respect to his or her hire, tenure, terms, conditions or privileges of employment, or any matter directly or indirectly related to employment, because of race, color, religion, national origin, ancestry, age, sex, height, weight, marital status, physical or mental disability. Contractor further agrees that every subcontract entered into for the performance of this Contract or any purchase order resulting from this Contract will contain a provision requiring non-discrimination in employment, as specified here, binding upon each Subcontractor. This covenant is required under the Elliot Larsen Civil Rights Act, 1976 PA 453, MCL 37.2101, et seq., and the Persons with Disabilities Civil Rights Act, 1976 PA 220, MCL 37.1101, et seq., and any breach of this provision may be regarded as a material breach of the Contract.

2.202 Unfair Labor Practices

Under 1980 PA 278, MCL 423.321, et seq., the State must not award a Contract or subcontract to an employer whose name appears in the current register of employers failing to correct an unfair labor practice compiled under section 2 of the Act. This information is compiled by the United States National Labor Relations Board. A Contractor of the State, in relation to the Contract, must not enter into a contract with a Subcontractor, manufacturer, or supplier whose name appears in this register. Under section 4 of 1980 PA 278, MCL 423.324, the State may void any Contract if, after award of the Contract, the name of Contractor as an employer or the name of the Subcontractor, manufacturer or supplier of Contractor appears in the register.

2.203 Workplace Safety and Discriminatory Harassment

In performing Services for the State, the Contractor must comply with the Department of Civil Services Rule 2-20 regarding Workplace Safety and Rule 1-8.3 regarding Discriminatory Harassment. In addition, the Contractor must comply with Civil Service regulations and any applicable agency rules provided to the Contractor. For Civil Service Rules, see http://www.mi.gov/mdcs/0,1607,7-147-6877---,00.html.

2.204 Prevailing Wage

The rates of wages and fringe benefits to be paid each class of individuals employed by the Contractor, its subcontractors, their subcontractors, and all persons involved with the performance of this Contract in privity of contract with the Contractor shall not be less than the wage rates and fringe benefits established by the Michigan Department of Labor and Economic Development, Wage and Hour Bureau, schedule of occupational classification and wage rates and fringe benefits for the local where the work is to be performed. The term Contractor shall include all general contractors, prime contractors, project managers, trade contractors, and all of their contractors or subcontractors and persons in privity of contract with them.

The Contractor, its subcontractors, their subcontractors and all persons involved with the performance of this contract in privity of contract with the Contractor shall keep posted on the work site, in a conspicuous place, a copy of all wage rates and fringe benefits as prescribed in the contract. You must also post, in a conspicuous place, the address and telephone number of the Michigan Department of Labor and Economic Development, the office responsible for enforcement of the wage rates and fringe benefits. You shall keep an accurate record showing the name and occupation of the actual wage and benefits paid to each individual employed in connection with this contract. This record shall be available to the State upon request for reasonable inspection.

If any trade is omitted from the list of wage rates and fringe benefits to be paid to each class of individuals by the Contractor, it is understood that the trades omitted shall also be paid not less than the wage rate and fringe benefits prevailing in the local where the work is to be performed.

2.210 Governing Law

2.211 Governing Law

The Contract must in all respects be governed by, and construed according to, the substantive laws of the State of Michigan without regard to any Michigan choice of law rules that would apply the substantive law of any other jurisdiction to the extent not inconsistent with, or pre-empted by federal law.

2.212 Compliance with Laws

Contractor shall comply with all applicable state, federal and local laws and ordinances in providing the Services/Deliverables.

2.213 Jurisdiction

Any dispute arising from the Contract must be resolved in the State of Michigan. With respect to any claim between the parties, Contractor consents to venue in Ingham County, Michigan, and irrevocably waives any objections it may have to the jurisdiction on the grounds of lack of personal jurisdiction of the court or the laying of venue of the court or on the basis of forum non conveniens or otherwise. Contractor agrees to appoint agents in the State of Michigan to receive service of process.

2.220 Limitation of Liability

2.221 Limitation of Liability

Neither the Contractor nor the State is liable to each other, regardless of the form of action, for consequential, incidental, indirect, or special damages. This limitation of liability does not apply to claims for infringement of United States patent, copyright, trademark or trade secrets; to claims for personal injury or damage to property caused by the gross negligence or willful misconduct of the Contractor; to claims covered by other specific provisions of this Contract calling for liquidated damages; or to court costs or attorney's fees awarded by a court in addition to damages after litigation based on this Contract.

2.230 Disclosure Responsibilities

2.231 Disclosure of Litigation

(a) Disclosure. Contractor must disclose any material criminal litigation, investigations or proceedings involving the Contractor (and each Subcontractor) or any of its officers or directors or any litigation, investigations or proceedings under the Sarbanes-Oxley Act. In addition, each Contractor (and each Subcontractor) must notify the State of any material civil litigation, arbitration or proceeding which arises during the term of the Contract and extensions, to which Contractor (or, to the extent Contractor is aware, any Subcontractor) is a party, and which involves: (i) disputes that might reasonably be expected to adversely affect the viability or financial stability of Contractor or any Subcontractor; or (ii) a claim or written allegation of fraud against Contractor or, to the extent Contractor is aware, any Subcontractor by a governmental or public entity arising out of their business dealings with governmental or public entities. The Contractor must disclose in writing to the Contract Administrator any litigation, investigation, arbitration or other proceeding (collectively, "Proceeding") within 30 days of its occurrence. Details of settlements which are prevented from disclosure by the terms of the settlement may be annotated. Information provided to the State from Contractor's publicly filed documents referencing its material litigation will be deemed to satisfy the requirements of this Section.

(b) Assurances. If any Proceeding disclosed to the State under this Section, or of which the State otherwise becomes aware, during the term of this Contract would cause a reasonable party to be concerned about:

(i) the ability of Contractor (or a Subcontractor) to continue to perform this Contract according to its terms and conditions, or

(ii) whether Contractor (or a Subcontractor) in performing Services for the State is engaged in conduct which is similar in nature to conduct alleged in the Proceeding, which conduct would constitute a breach of this Contract or a violation of Michigan law, regulations or public policy, then the Contractor must provide the State all reasonable assurances requested by the State to demonstrate that:

(a) Contractor and its Subcontractors will be able to continue to perform this Contract and any Statements of Work according to its terms and conditions, and

(b) Contractor and its Subcontractors have not and will not engage in conduct in performing the Services which is similar in nature to the conduct alleged in the Proceeding.

(c) Contractor must make the following notifications in writing:

(1) Within 30 days of Contractor becoming aware that a change in its ownership or officers has occurred, or is certain to occur, or a change that could result in changes in the valuation of its capitalized assets in the accounting records, Contractor must notify DMB PurchOps.

(2) Contractor must also notify DMB PurchOps within 30 days whenever changes to asset valuations or any other cost changes have occurred or are certain to occur as a result of a change in ownership or officers.

(3) Contractor must also notify DMB PurchOps within 30 days whenever changes to company affiliations occur.

2.232 Call Center Disclosure Deleted Not Applicble

2.233 Bankruptcy

The State may, without prejudice to any other right or remedy, terminate this Contract, in whole or in part, and, at its option, may take possession of the "Work in Process" and finish the Works in Process by whatever appropriate method the State may deem expedient if:

(a) the Contractor files for protection under the bankruptcy laws;

(b) an involuntary petition is filed against the Contractor and not removed within 30 days;

(c) the Contractor becomes insolvent or if a receiver is appointed due to the Contractor's insolvency;

(d) the Contractor makes a general assignment for the benefit of creditors; or

(e) the Contractor or its affiliates are unable to provide reasonable assurances that the Contractor or its affiliates can deliver the services under this Contract.

Contractor will fix appropriate notices or labels on the Work in Process to indicate ownership by the State. To the extent reasonably possible, materials and Work in Process must be stored separately from other stock and marked conspicuously with labels indicating ownership by the State.

2.240 Performance Deleted Not Applicable

2.241 Time of Performance

(a) Contractor must use commercially reasonable efforts to provide the resources necessary to complete all Services and Deliverables according to the time schedules contained in the Statements of Work and other Exhibits governing the work, and with professional quality.
(b) Without limiting the generality of **Section 2.211(a),** Contractor must notify the State in a timely manner upon becoming aware of any circumstances that may reasonably be expected to jeopardize the timely and successful completion of any Deliverables/Services on the scheduled due dates in the latest State-approved delivery schedule and must inform the State of the projected actual delivery date.
(c) If the Contractor believes that a delay in performance by the State has caused or will cause the Contractor to be unable to perform its obligations according to specified Contract time periods, the Contractor must notify the State in a timely manner and must use commercially reasonable efforts to perform its obligations according to the Contract time periods notwithstanding the State's failure. Contractor will not be in default for a delay in performance to the extent the delay is caused by the State.
(d) Should the State of Michigan issue an Executive Order thru the Office of State Employer mandating furlough days, the furlough days will not be considered a Business Day. The Contractor will not seek additional costs from the State for project schedule extensions to the extent such extensions are needed due to Contractor's inability to complete deliverables and milestones in accordance with the project schedule as a result of the above mentioned furlough days.

2.242 Service Level Agreements (SLAs) Deleted Not Applicable

2.243 Liquidated Damages Deleted Not Applicable

2.244 Excusable Failure

Neither party will be liable for any default, damage or delay in the performance of its obligations under the Contract to the extent the default, damage or delay is caused by government regulations or requirements (executive, legislative, judicial, military or otherwise), power failure, electrical surges or current fluctuations, lightning, earthquake, war, water or other forces of nature or acts of God, delays or failures of transportation, equipment shortages, suppliers' failures, or acts or omissions of common carriers, fire; riots, civil disorders; strikes or other labor disputes, embargoes; injunctions (provided the injunction was not issued as a result of any fault or negligence of the party seeking to have its default or delay excused); or any other cause beyond the reasonable control of a party; provided the non-performing party and its Subcontractors are without fault in causing the default or delay, and the default or delay could not have been prevented by reasonable precautions and cannot reasonably be circumvented by the non-performing party through the use of alternate sources, workaround plans or other means, including disaster recovery plans.

If a party does not perform its contractual obligations for any of the reasons listed above, the non-performing party will be excused from any further performance of its affected obligation(s) for as long as the circumstances prevail. But the party must use commercially reasonable efforts to recommence performance whenever and to whatever extent possible without delay. A party must promptly notify the other party in writing immediately after the excusable failure occurs, and also when it abates or ends.

If any of the above-enumerated circumstances substantially prevent, hinder, or delay the Contractor's performance of the Services/provision of Deliverables for more than 10 Business Days, and the State determines that performance is not likely to be resumed within a period of time that is satisfactory to the State in its reasonable discretion, then at the State's option: (a) the State may procure the affected Services/Deliverables from an alternate source, and the State is not be liable for payment for the unperformed Services/ Deliverables not provided under the Contract for so long as the delay in performance continues; (b)

the State may terminate any portion of the Contract so affected and the charges payable will be equitably adjusted to reflect those Services/Deliverables terminated; or (c) the State may terminate the affected Statement of Work without liability to Contractor as of a date specified by the State in a written notice of termination to the Contractor, except to the extent that the State must pay for Services/Deliverables provided through the date of termination.

The Contractor will not have the right to any additional payments from the State as a result of any Excusable Failure occurrence or to payments for Services not rendered/Deliverables not provided as a result of the Excusable Failure condition. Defaults or delays in performance by Contractor which are caused by acts or omissions of its Subcontractors will not relieve Contractor of its obligations under the Contract except to the extent that a Subcontractor is itself subject to an Excusable Failure condition described above and Contractor cannot reasonably circumvent the effect of the Subcontractor's default or delay in performance through the use of alternate sources, workaround plans or other means.

2.250 Approval of Deliverables Deleted Not Applicable

2.251 Delivery Responsibilities

Unless otherwise specified by the State within an individual order, the following must be applicable to all orders issued under this Contract.

(a) Shipment responsibilities - Services performed/Deliverables provided under this Contract must be delivered "F.O.B. Destination, within Government Premises." The Contractor must have complete responsibility for providing all Services/Deliverables to all site(s) unless otherwise stated. Actual delivery dates will be specified on the individual purchase order.
(b) Delivery locations - Services will be performed/Deliverables will be provided at every State of Michigan location within Michigan unless otherwise stated in the SOW. Specific locations will be provided by the State or upon issuance of individual purchase orders.
(c) Damage Disputes - At the time of delivery to State Locations, the State must examine all packages. The quantity of packages delivered must be recorded and any obvious visible or suspected damage must be noted at time of delivery using the shipper's delivery document(s) and appropriate procedures to record the damage. Where there is no obvious or suspected damage, all deliveries to a State Location must be opened by the State and the contents inspected for possible internal damage not visible externally within 14 days of receipt. Any damage must be reported to the Contractor within five days of inspection.

2.252 Delivery of Deliverables

Where applicable, the Statements of Work/POs contain lists of the Deliverables to be prepared and delivered by Contractor including, for each Deliverable, the scheduled delivery date and a designation of whether the Deliverable is a document ("Written Deliverable"), a good ("Physical Deliverable") or a Service. All Deliverables must be completed and delivered for State review and written approval and, where applicable, installed according to the State-approved delivery schedule and any other applicable terms and conditions of the Contract.

2.253 Testing

(a) Before delivering any of the above-mentioned Statement of Work Physical Deliverables or Services to the State, Contractor will first perform all required quality assurance activities to verify that the Physical Deliverable or Service is complete and conforms with its specifications listed in the applicable Statement of Work or Purchase Order. Before delivering a Physical Deliverable or Service to the State, Contractor must certify to the State that (1) it has performed the quality assurance activities, (2) it has performed any applicable testing, (3) it has corrected all material deficiencies discovered during the quality assurance activities and testing, (4) the Deliverable or Service is in a suitable state of readiness for the State's review and approval, and (5) the Deliverable/Service has all Critical Security patches/updates applied.
(b) If a Deliverable includes installation at a State Location, then Contractor must (1) perform any applicable testing, (2) correct all material deficiencies discovered during the quality assurance activities and testing, and (3) inform the State that the Deliverable is in a suitable state of readiness for the State's review and approval.

To the extent that testing occurs at State Locations, the State is entitled to observe or otherwise participate in testing.

2.254 Approval of Deliverables, In General

(a) All Deliverables (Physical Deliverables and Written Deliverables) and Services require formal written approval by the State, according to the following procedures. Formal approval by the State requires the State to confirm in writing that the Deliverable meets its specifications. Formal approval may include the successful completion of Testing as applicable in **Section 2.253**, to be led by the State with the support and assistance of Contractor. The approval process will be facilitated by ongoing consultation between the parties, inspection of interim and intermediate Deliverables and collaboration on key decisions.

(b) The State's obligation to comply with any State Review Period is conditioned on the timely delivery of Deliverables/Services being reviewed.

(c) Before commencement of its review or testing of a Deliverable/Service, the State may inspect the Deliverable/Service to confirm that all components of the Deliverable/Service have been delivered without material deficiencies. If the State determines that the Deliverable/Service has material deficiencies, the State may refuse delivery of the Deliverable/Service without performing any further inspection or testing of the Deliverable/Service. Otherwise, the review period will be deemed to have started on the day the State receives the Deliverable or the Service begins, and the State and Contractor agree that the Deliverable/Service is ready for use and, where applicable, certification by Contractor according to **Section 2.223**.

(d) The State will approve in writing a Deliverable/Service after confirming that it conforms to and performs according to its specifications without material deficiency. The State may, but is not be required to, conditionally approve in writing a Deliverable/Service that contains material deficiencies if the State elects to permit Contractor to rectify them post-approval. In any case, Contractor will be responsible for working diligently to correct within a reasonable time at Contractor's expense all deficiencies in the Deliverable/Service that remain outstanding at the time of State approval.

(e) If, after three opportunities (the original and two repeat efforts), the Contractor is unable to correct all deficiencies preventing Final Acceptance of a Deliverable/Service, the State may: (i) demand that the Contractor cure the failure and give the Contractor additional time to cure the failure at the sole expense of the Contractor; or (ii) keep the Contract in force and do, either itself or through other parties, whatever the Contractor has failed to do, and recover the difference between the cost to cure the deficiency and the contract price plus an additional sum equal to 10% of the cost to cure the deficiency to cover the State's general expenses provided the State can furnish proof of the general expenses; or (iii) terminate the particular Statement of Work for default, either in whole or in part by notice to Contractor provided Contractor is unable to cure the breach. Notwithstanding the foregoing, the State cannot use, as a basis for exercising its termination rights under this Section, deficiencies discovered in a repeat State Review Period that could reasonably have been discovered during a prior State Review Period.

(f) The State, at any time and in its reasonable discretion, may halt the testing or approval process if the process reveals deficiencies in or problems with a Deliverable/Service in a sufficient quantity or of a sufficient severity that renders continuing the process unproductive or unworkable. If that happens, the State may stop using the Service or return the applicable Deliverable to Contractor for correction and re-delivery before resuming the testing or approval process.

2.255 Process For Approval of Written Deliverables

The State Review Period for Written Deliverables will be the number of days set forth in the applicable Statement of Work following delivery of the final version of the Deliverable (and if the Statement of Work does not state the State Review Period, it is by default five Business Days for Written Deliverables of 100 pages or less and 10 Business Days for Written Deliverables of more than 100 pages). The duration of the State Review Periods will be doubled if the State has not had an opportunity to review an interim draft of the Written Deliverable before its submission to the State. The State agrees to notify Contractor in writing by the

end of the State Review Period either stating that the Deliverable is approved in the form delivered by Contractor or describing any deficiencies that must be corrected before approval of the Deliverable (or at the State's election, after approval of the Deliverable). If the State notifies the Contractor about deficiencies, the Contractor will correct the described deficiencies and within 30 Business Days resubmit the Deliverable in a form that shows all revisions made to the original version delivered to the State. Contractor's correction efforts will be made at no additional charge. Upon receipt of a corrected Deliverable from Contractor, the State will have a reasonable additional period of time, not to exceed the length of the original State Review Period, to review the corrected Deliverable to confirm that the identified deficiencies have been corrected.

2.256 Process for Approval of Services

The State Review Period for approval of Services is governed by the applicable Statement of Work (and if the Statement of Work does not state the State Review Period, it is by default 30 Business Days for Services). The State agrees to notify the Contractor in writing by the end of the State Review Period either stating that the Service is approved in the form delivered by the Contractor or describing any deficiencies that must be corrected before approval of the Services (or at the State's election, after approval of the Service). If the State delivers to the Contractor a notice of deficiencies, the Contractor will correct the described deficiencies and within 30 Business Days resubmit the Service in a form that shows all revisions made to the original version delivered to the State. The Contractor's correction efforts will be made at no additional charge. Upon implementation of a corrected Service from Contractor, the State will have a reasonable additional period of time, not to exceed the length of the original State Review Period, to review the corrected Service for conformity and that the identified deficiencies have been corrected.

2.257 Process for Approval of Physical Deliverables

The State Review Period for approval of Physical Deliverables is governed by the applicable Statement of Work (and if the Statement of Work does not state the State Review Period, it is by default 30 continuous Business Days for a Physical Deliverable). The State agrees to notify the Contractor in writing by the end of the State Review Period either stating that the Deliverable is approved in the form delivered by the Contractor or describing any deficiencies that must be corrected before approval of the Deliverable (or at the State's election, after approval of the Deliverable). If the State delivers to the Contractor a notice of deficiencies, the Contractor will correct the described deficiencies and within 30 Business Days resubmit the Deliverable in a form that shows all revisions made to the original version delivered to the State. The Contractor's correction efforts will be made at no additional charge. Upon receipt of a corrected Deliverable from the Contractor, the State will have a reasonable additional period of time, not to exceed the length of the original State Review Period, to review the corrected Deliverable to confirm that the identified deficiencies have been corrected.

2.258 Final Acceptance

Unless otherwise stated in the Article 1, Statement of Work or Purchase Order, "Final Acceptance" of each Deliverable must occur when each Deliverable/Service has been approved by the State following the State Review Periods identified in **Sections 2.251-2.257**. Payment will be made for Deliverables installed and accepted. Upon acceptance of a Service, the State will pay for all Services provided during the State Review Period that conformed to the acceptance criteria.

2.260 Ownership

2.261 Ownership of Work Product by State

The State owns all Deliverables as they are works made for hire by the Contractor for the State. The State owns all United States and international copyrights, trademarks, patents or other proprietary rights in the Deliverables.

2.262 Vesting of Rights

With the sole exception of any preexisting licensed works identified in the SOW, the Contractor assigns, and upon creation of each Deliverable automatically assigns, to the State, ownership of all United States and international copyrights, trademarks, patents, or other proprietary rights in each and every Deliverable, whether or not registered by the Contractor, insofar as any the Deliverable, by operation of law, may not be considered work made for hire by the Contractor for the State. From time to time upon the State's request,

the Contractor must confirm the assignment by execution and delivery of the assignments, confirmations of assignment, or other written instruments as the State may request. The State may obtain and hold in its own name all copyright, trademark, and patent registrations and other evidence of rights that may be available for Deliverables.

2.263 Rights in Data

(a) The State is the owner of all data made available by the State to the Contractor or its agents, Subcontractors or representatives under the Contract. The Contractor will not use the State's data for any purpose other than providing the Services, nor will any part of the State's data be disclosed, sold, assigned, leased or otherwise disposed of to the general public or to specific third parties or commercially exploited by or on behalf of the Contractor. No employees of the Contractor, other than those on a strictly need-to-know basis, have access to the State's data. Contractor will not possess or assert any lien or other right against the State's data. Without limiting the generality of this Section, the Contractor must only use personally identifiable information as strictly necessary to provide the Services and must disclose the information only to its employees who have a strict need-to-know the information. The Contractor must comply at all times with all laws and regulations applicable to the personally identifiable information.

(b) The State is the owner of all State-specific data under the Contract. The State may use the data provided by the Contractor for any purpose. The State will not possess or assert any lien or other right against the Contractor's data. Without limiting the generality of this Section, the State may use personally identifiable information only as strictly necessary to utilize the Services and must disclose the information only to its employees who have a strict need to know the information, except as provided by law. The State must comply at all times with all laws and regulations applicable to the personally identifiable information. Other material developed and provided to the State remains the State's sole and exclusive property.

2.264 Ownership of Materials

The State and the Contractor will continue to own their respective proprietary technologies developed before entering into the Contract. Any hardware bought through the Contractor by the State, and paid for by the State, will be owned by the State. Any software licensed through the Contractor and sold to the State, will be licensed directly to the State.

2.270 State Standards

2.271 Existing Technology Standards

The Contractor will adhere to all existing standards as described within the comprehensive listing of the State's existing technology standards at http://www.michigan.gov/dit.

2.272 Acceptable Use Policy

To the extent that Contractor has access to the State computer system, Contractor must comply with the State's Acceptable Use Policy, see http://www.michigan.gov/ditservice. All Contractor employees must be required, in writing, to agree to the State's Acceptable Use Policy before accessing the State system. The State reserves the right to terminate Contractor's access to the State system if a violation occurs.

2.273 Systems Changes

Contractor is not responsible for and not authorized to make changes to any State systems without written authorization from the Project Manager. Any changes Contractor makes to State systems with the State's approval must be done according to applicable State procedures, including security, access and configuration management procedures.

2.280 Extended Purchasing

2.281 MiDEAL

Act Number 431 of the Public Acts of 1984 permits the State of Michigan, Department of Management and Budget, to provide purchasing services to any city, village, county, township, school district, intermediate

school district, non-profit hospital, institution of higher education, community, or junior college. As a result of the enactment of this legislation, the MIDEAL Program has been developed. This program extends the use of state contracts to program members. The governmental agency must enter into an agreement with the State of Michigan to become authorized to participate, thus ensuring that local units of government secure a greater return for the expenditure of public funds.

In those cases, contract vendors supply merchandise at the established State of Michigan contract prices and terms. The contract vendor must submit invoices and pay the authorized MIDEAL member on a direct and individual basis according to contract terms.

IT IS MANDATORY THAT ALL CONTRACTS RESULTING FROM THIS RFP WILL BE MADE AVAILABLE TO ALL STATE OF MICHIGAN AGENCIES AND AUTHORIZED MIDEAL PURCHASING PROGRAM MEMBERS.

Please Visit Mi DEAL at www.michigan.gov/buymichiganfirst under MiDEAL.

Estimated requirements for authorized local units of government are not included in the quantities shown in this RFP.

2.282 State Employee Purchases Deleted Not Applicable

2.290 Environmental Provision

2.291 Environmental Provision

Energy Efficiency Purchasing Policy – The State seeks wherever possible to purchase energy efficient products. This includes giving preference to U.S. Environmental Protection Agency (EPA) certified 'Energy Star' products for any category of products for which EPA has established Energy Star certification. For other purchases, the State may include energy efficiency as one of the priority factors to consider when choosing among comparable products.

Environmental Purchasing Policy – The State of Michigan is committed to encouraging the use of products and services that impact the environment less than competing products. The State is accomplishing this by including environmental considerations in purchasing decisions, while remaining fiscally responsible, to promote practices that improve worker health, conserve natural resources, and prevent pollution. Environmental components that are to be considered include: recycled content and recyclability; energy efficiency; and the presence of undesirable materials in the products, especially those toxic chemicals which are persistent and bioaccumulative. The Contractor should be able to supply products containing recycled and environmentally preferable materials that meet performance requirements and is encouraged to offer such products throughout the duration of this Contract. Information on any relevant third party certification (such as Green Seal, Energy Star, etc.) should also be provided.

Hazardous Materials:
For the purposes of this Section, "Hazardous Materials" is a generic term used to describe asbestos, ACBMs, PCBs, petroleum products, construction materials including paint thinners, solvents, gasoline, oil, and any other material the manufacture, use, treatment, storage, transportation or disposal of which is regulated by the federal, state or local laws governing the protection of the public health, natural resources or the environment. This includes, but is not limited to, materials the as batteries and circuit packs, and other materials that are regulated as (1) "Hazardous Materials" under the Hazardous Materials Transportation Act, (2) "chemical hazards" under the Occupational Safety and Health Administration standards, (3) "chemical substances or mixtures" under the Toxic Substances Control Act, (4) "pesticides" under the Federal Insecticide Fungicide and Rodenticide Act, and (5) "hazardous wastes" as defined or listed under the Resource Conservation and Recovery Act.
(a) The Contractor must use, handle, store, dispose of, process, transport and transfer any material considered a Hazardous Material according to all federal, State and local laws. The State must provide a safe and suitable environment for performance of Contractor's Work. Before the commencement of Work, the State

must advise the Contractor of the presence at the work site of any Hazardous Material to the extent that the State is aware of the Hazardous Material. If the Contractor encounters material reasonably believed to be a Hazardous Material and which may present a substantial danger, the Contractor must immediately stop all affected Work, notify the State in writing about the conditions encountered, and take appropriate health and safety precautions.

(b) Upon receipt of a written notice, the State will investigate the conditions. If (a) the material is a Hazardous Material that may present a substantial danger, and (b) the Hazardous Material was not brought to the site by the Contractor, or does not result in whole or in part from any violation by the Contractor of any laws covering the use, handling, storage, disposal of, processing, transport and transfer of Hazardous Materials, the State must order a suspension of Work in writing. The State must proceed to have the Hazardous Material removed or rendered harmless. In the alternative, the State must terminate the affected Work for the State's convenience.

(c) Once the Hazardous Material has been removed or rendered harmless by the State, the Contractor must resume Work as directed in writing by the State. Any determination by the Michigan Department of Community Health or the Michigan Department of Environmental Quality that the Hazardous Material has either been removed or rendered harmless is binding upon the State and Contractor for the purposes of resuming the Work. If any incident with Hazardous Material results in delay not reasonable anticipatable under the circumstances and which is attributable to the State, the applicable SLAs for the affected Work will not be counted in time as mutually agreed by the parties.

(d) If the Hazardous Material was brought to the site by the Contractor, or results in whole or in part from any violation by the Contractor of any laws covering the use, handling, storage, disposal of, processing, transport and transfer of Hazardous Material, or from any other act or omission within the control of the Contractor, the Contractor must bear its proportionate share of the delay and costs involved in cleaning up the site and removing and rendering harmless the Hazardous Material according to Applicable Laws to the condition approved by applicable regulatory agency(ies).

Michigan has a Consumer Products Rule pertaining to labeling of certain products containing volatile organic compounds. For specific details visit http://www.michigan.gov/deq/0,1607,7-135-3310_4108-173523--,00.html

Refrigeration and Air Conditioning:
The Contractor shall comply with the applicable requirements of Sections 608 and 609 of the Clean Air Act (42 U.S.C. 7671g and 7671h) as each or both apply to this contract.

Environmental Performance:
Waste Reduction Program - Contractor shall establish a program to promote cost-effective waste reduction in all operations and facilities covered by this contract. The Contractor's programs shall comply with applicable Federal, State, and local requirements, specifically including Section 6002 of the Resource Conservation and Recovery Act (42 U.S.C. 6962, et seq.).

2.300 Other Provisions

2.311 Forced Labor, Convict Labor, Forced or Indentured Child Labor, or Indentured Servitude Made Materials

Equipment, materials, or supplies, that will be furnished to the State under the Contract must not be produced in whole or in part by forced labor, convict labor, forced or indentured child labor, or indentured servitude.

"Forced or indentured child labor" means all work or service: exacted from any person under the age of 18 under the menace of any penalty for its nonperformance and for which the worker does not offer himself voluntarily; or performed by any person under the age of 18 under a contract the enforcement of which can be accomplished by process or penalties.

Attachment A: MDOT Standard Plans and Specifications

MDOT SPECIAL PROVISION FOR SOLID STATE, PRETIMED, INTERVAL ORIENTED T.S. CONTROLLER. (30 PAGES)

MDOT SPECIAL PROVISION FOR FOUR OR SIXTEEN PHASE DIGITAL ACTUATED T.S. CONTROLLER (39 PAGES)
MDOT SPECIAL PROVISION FOR SOLID STATE FLASHING BEACON CONTROLLER AND CABINET. (2 PAGE)
MDOT SPECIAL PROVISION FOR SOLID STATE FLASHING BEACON CONTROLLER (CAP TYPE). (2 PAGE)
MDOT SPECIAL PROVISION FOR SYSTEM MASTER (ON STREET). (2 PAGES)
MDOT SPECIAL PROVISION FOR TRAFFIC SIGNALS MAST ARM POLE AND MAST ARM. (3 PAGES)
MDOT SPECIAL PROVISION FOR STROBE LIGHT. (1 PAGE)
MDOT SPECIAL PROVISION FOR LIGHT EMITTING DIODE (LED) ADJUSTABLE VEHICLE TRAFFIC SIGNALS (9 PGS.)

MDOT SPECIAL PROVISION MDOT SPECIAL PROVISION FOR 24 X 30 INCH DISAPPEARING LEGEND CASE SIGN. (3 PAGES)

MDOT SPECIAL PROVISION FOR INTERCONNECT ENCODER AND DECODER. (3 PAGES)
MDOT SPECIAL PROVISION FOR MAST ARM MOUNT SIGNAL BRACKET - ONE-WAY. (3 PAGES)
MDOT SPECIAL PROVISION FOR STEEL GALVANIZED TRUSS ARMS FOR VIDEO DETECTION CAMERAS. (2 PAGE)

MDOT SPECIAL PROVISION FOR SPREAD SPECTRUM WIRELESS INTERCONNECT - CLOSED LOOP. (3 PAGES)
MDOT SPECIAL PROVISION FOR 24 HR SOLAR POWERED FLASHER CABINET ASSEMBLY (95-690 WATT). (3 PAGES)

MDOT SPECIAL PROVISION FOR SOLAR PANEL ARRAYS FOR SOLAR POWERED FLASHER APPLICATIONS. (2 PAGE)

MDOT SPECIAL PROVISION FOR VIDEO TRAFFIC DETECTION SYSTEM. (8 PAGES)
MDOT SPECIAL PROVISION FOR GPS TIME SYNCHRONIZATION MODULE. (2 PAGES)
MDOT SPECIAL PROVISION FOR LIGHT EMITTING DIODE (LED) VEHICLE TRAFFIC SIGNALS. (10 PAGES)
MDOT SPECIAL PROVISION FOR SOLAR POWER FLASHING BEACON. (4 PAGES)
MDOT SPECIAL PROVISION FOR SPLICE BOX. (2 PAGES)
MDOT SPECIAL PROVISION FOR TRAFFIC SIGNAL UNINTERRUPTIBLE POWER SYSTEM. (7 PAGES)
MDOT SPECIAL PROVISION FOR WIRELESS INTERCONNECT FOR SIGN MOUNTED FLASHER. (5 PAGES)
MDOT SPECIAL PROVISION FOR LIGHT EMITTING DIODE (LED) COUNTDOWN PEDESTRIAN TRAFFIC SIGNALS (7 PAGES)

MDOT SPECIAL PROVISION FOR ACCESSIBLE PEDESTRIAN SIGNAL SYSTEM (6 PAGES)
MDOT SPECIAL PROVISION FOR WIRELESS VEICLE DETECTION SYSTEM (3 PAGES)

MICHIGAN
DEPARTMENT OF TRANSPORTATION

SPECIAL PROVISION
FOR
SOLID-STATE, PRETIMED, INTERVAL ORIENTED TRAFFIC SIGNAL CONTROLLERS

a. Description. Furnish all labor, equipment, and material required to install a Solid-State, Pretimed, Interval Oriented Traffic Signal Controller to provide intersection traffic control operations to meet the requirements of the *Michigan Manual on Traffic Control Devices* (MMUTCD). This includes installing the controller and cabinet complete, on the steel or wood pole, or new concrete foundation (if required) and furnishing and installing all necessary equipment, hardware, conduit risers, cable, wiring, necessary rewiring of signal head(s) and grounding all as specified herein and as shown on the plans. This also includes furnishing and delivering the controller and cabinet to the maintaining agency for timing and set-up the controllers and cabinet as specified herein and as shown on plans.

b. Material. Material shall meet Sections 918 and 921 of the Standard Specifications for Construction and this special provision.

1. **Controller Timing Unit.**

A. Scope. The purpose of this document is to describe the minimum acceptable design and operating requirements for a solid state pretimed interval oriented controller with a full complement of operational, programming and diagnostic capabilities. The controller shall include comprehensive traffic control, analytical and management capabilities utilizing efficient, menu structured, traffic oriented/English language operator interface.

B. Environmental Standards. The controller unit shall perform all of its functions within the environment as defined by current *National Electrical Manufactures Association (NEMA) Standards Publication TS1*. The controller unit shall meet or exceed the applicable sections and clauses of current *NEMA Standards Publication TS 1*, Section 2, with respect to each of the following functions:

Operating Voltage	Transients, Power Service
Operating Frequency	Transients, Input-Output
Terminals	Power Interruption
Temperature and Humidity	Vibration and Shock
Nondestructive Transient	Immunity

C. Controller Unit. This section defines the physical, interface (RS232C and Systems) requirements of the solid state controller units.

(1) Definitions. *Current NEMA Standards Publication TS1*, Section 1 shall apply.

(2) Physical Standards.
(a) Construction. The controller unit shall consist of a main frame housing suitable for shelf mounting. The housing shall contain a motherboard to interconnect a processor module, interface, power supply and additional required boards or

modules. Printed circuit boards or modules shall be easily removable without the need for tools. All modules or boards shall be plug in and similar modules shall be interchangeable between controller units.

Operator programmable data entry shall be accomplished through a keyboard on the controller unit. It shall be possible to display data programmed in the Signal Plan Electronically Erasable Programmable Read Only Memory (EEPROM) by use of the keyboard. Since this data is resident in EEPROM, it shall require the proper three-level access code to change any of the data. Level 2 shall only be able to change Timing Plan Data, Level 1 shall be able to change all data except the access codes and Level 0 change all data as well as access codes.

The connector(s) shall be a 19 pin MIL-C-26482 and a 61 pin MS3112A-24-61S. To be interchangeable with existing equipment, the connectors **shall** be wired as follows:

TABLE 1: CONNECTOR A (MIL-C-26482 SERIES, 19 PIN)

Function	Pin	Function	Pin
AC-	C	Offset 3	L
AC Cont. Comm R-	R	Dial A	E
AC+	A	Dial B	F
Safety Grd.	H	Flash In	U
Offset 1	J	Split A	N
Offset 2	K	Split B	P

TABLE 2: CONNECTOR B (MS3112A-24-61S SERIES, 61 PIN)

Function	Pin	Function	Pin
1V Red Driver	H	CV Yellow Driver	PP
1V Yellow Driver	J	CV Green Driver	MM
1V Green Driver	i	DV Red Driver	GG
2V Red Driver	L	DV Yellow Driver	HH
2V Yellow Driver	K	DV Green Driver	FF
2V Green Driver	j	Stat. Bit A SC37	A
3V Red Driver	G	Stat. Bit B SC38	B
3V Yellow Driver	h	Stat. Bit C SC39	c
3V Green Driver	g	Flash Logic	U
4V Red Driver	z	Interval Advance	a
4V Yellow Driver	A	Stop Time	Z
4V Green Driver	LL	Manual Enable	X
Function	**Pin**	**Function**	**Pin**
1P Red Driver	F	External Start	u
1P Yellow Driver	E	Force Off	Y
1P Green Driver	f	Det. 1 Veh	P
2P Red Driver	y	Det. 1 Ped	R
2P Yellow Driver	KK	Det. 2 Veh	S
2P Green Driver	JJ	Det. 2 Ped	T
3P Red Driver	D	Interval 1 On	V
3P Yellow Driver	e	Voltage Monitor	S
3P Green Driver	x	+24 VDC	b
4P Red Driver	C	Logic Common	T

4P Yellow Driver	w	Signal Plan A	n
4P Green Driver	d	Signal Plan B	Q
AV Red Driver	N	Master Sync	W
AV Yellow Driver	M	Preempt 1	r
AV Green Driver	k	Preempt 2	m
BV Red Driver	CC	Master/Sec.	p
BV Yellow Driver	DD	Computer Cont.	v
BV Green Driver	BB	Hold (On Line)	EE
CV Red Driver	NN		

The Controller Unit shall operate on standard 120 volt (V) alternating current (AC) 60 Hertz (Hz) interconnect inputs without additional user supplied interface. All fuses shall be accessible and be on the front panel. The model and serial number shall be shown on the Controller Unit.

Indicators shall be liquid crystal displays.

Printed circuit assemblies shall have parts identification etched or silk screened on the circuit boards.

(b) Dimensions. The dimensions of the controller unit enclosure shall conform to the following maximum limits:

Height = 10 inches Width = 16 inches Depth = 9 inches

(c) Memory. To insure the accuracy for traffic control parameters, even during power outages, EEPROM technology shall be used to retain all timing and control parameters. No batteries shall be required for retention of traffic parameters or Time Base functions. Event logging and Time Base clock functions may utilize battery supported Random Access Memory (RAM) memory for support of those functions.

(3) Interface Standards. The controller unit shall provide an input-output interface to meet the following requirements.

(a) RS-232C Interface. The controller unit shall provide for asynchronous serial data communications with a RS-232C 25 pin interface and connector provided for interconnecting to a printer, another like controller unit, a local personal computer, or a remote personal computer through an external phone modem.

(i) Unit to Printer. It shall be possible to transmit American Standard Code for Information Interchange (ASCII) coded information (data, letters, headings, etc) to an 80 column or larger printer. The printer must be RS-232C compatible, be able to receive ASCII coded serial data at 1200 baud, 8 data bits, odd parity and utilize X-ON/X-OFF protocol.

The controller unit timing and operational data shall be individually transmitted to the printer. The printout shall be in a format easily understood by a person familiar with traffic engineering terminology. The unit to printer transmissions shall not interrupt normal operation.

(ii) Unit to Unit. The controller unit timing and operational data shall be individually transmitted to/from another like controller unit. The unit to unit transmissions will not interrupt normal controller unit operation except when the

Signal Plan or Active Interval definition is changed. When the received data is different from that running, the receiving unit shall automatically revert to the Start Flash interval. The receiving unit shall time the Start Flash time and resume normal operation in the programmed Initialization interval.

(iii) Unit to Personal Computer. The controller unit timing and operational data shall be individually transmitted to/from a personal computer running the appropriate software. The transmissions shall not interrupt normal controller unit operation except when Unit Structure data is changed. When the received Unit Structure data is different from that running, the receiving unit shall automatically revert to the Start-Up Flash interval. The receiving unit shall time the Start-Up Flash time and resume normal operation in the programmed Initialization interval. The controller unit active status (Traffic Timers, Coordination Timers, Preempt Timers, and Time Base Current) shall be individually transmitted to the personal computer running the appropriate software. This must be compatible with software presently being used by the Michigan Department of Transportation (MDOT).

The controller unit report logs shall be individually transmitted to the personal computer running the appropriate software. This must be compatible with software presently being used by MDOT.

(iv) Unit to Conflict Monitor. The controller unit shall receive event log and data reference from a conflict monitor via the RS232C interface and save same for future uploading to a personal computer.

(b) Systems Interface. Each local intersection controller shall be provided with a system interface with allows reception of Central Office Master and On Street Master commands and transmission of local intersection data to the respective site. This must be compatible with existing systems now used by cities. The controller shall be capable of being programmed to operate from 1,200 baud to 19,200 baud. Two communications ports shall be provided.

Provision for a separate communications port "D", shall be made for purposes of using the controller in a system's environment. The connector shall be a 37 pin Amp #747315-2. In the event the controller is used as a 'system controller', no changes to the controller shall be allowed.

TABLE 3: CONNECTOR D (AMP #747315-2 SERIES, 37 PIN)

Function	Pin I/O	Function	Pin I/O
TBC On Line (SD#1)	1 I	Set Clock (SS#5)	20 I
Dial A (SD#7)	2 I	Dimmer (SS#6)	21 I
Dial B (SD#8)	3 I	Dial A (SF#7)	22 O
Split A (SD#5)	4 I	Dial B (SF#8)	23 O
Split B (SD#6)	5 I	Split A (SF#5)	24 O
Offset 1 (SD#2)	6 I	Split B (SF#6)	25 O
Offset 2 (SD#3)	7 I	Offset 1 (SF#2)	26 O
Offset 3 (SD#4)	8 I	Offset 2 (SF#3)	27 O
Auto Flash	9 I	Offset 3 (SF#4)	28 O
Preempt #3	10 I	Flash (SF#1)	29 O
Preempt #4	11 I	Aux #1	30 O
Preempt #5	12 I	Aux #2 or any PE	31 O

Preempt #6	13 I	Aux #3 or Det Reset	32 O
Conflict Flash	14 I	Logic Common	33 O
Manual Flash	15 I	Opt Serial Com 1	34 O
Veh Det #3 (SS#1)	16 I	Opt Serial Com 1	35 O
Ped Det #3 (SS#2)	17 I	Reserved 1	36 O
Veh Det #4 (SS#3)	18 I	Reserved 2	37 O
Ped Det #4 (SS#4)	19 I		

(i) Internal Modem. Each controller shall be provided with an internal modem that will communicate with an existing system master controller. The controller shall provide for asynchronous serial data communications using Time Division Multiplexing (TDM) Frequency Shift Keying (FSK) techniques to transmit and receive coded 1200 Bits Per Second (bps) serial data for purposes of using the controller unit in a systems environment. The system interface shall provide two-wire half duplex communications over an unconditioned type 3002 voice grade private line channel or equivalent cable.

(4). Electrical. All inputs and outputs except those pertaining to interconnect shall conform to current *NEMA Standards Publication*.

All components shall be operated in accordance with good commercial practice to optimize life and performance.

The design goal shall be such that, under 24-hour a day operating conditions in their circuit applications, all components shall have a life of not less than five years.

All printed circuit boards shall be made from *NEMA Standards Publication* approved FR-4 glass epoxy and shall be a nominal thickness of at least 1/16 inch.

(5) Constancy of Intervals. The digital timing of the Controller Unit shall relate directly to the 60 Hz input line frequency. No cumulative or drift or setting errors shall occur in interval timing.

The Controller Unit shall be of such design that the length of any interval shall not deviate by more than +/- 100 milliseconds from its set value at a power source frequency of 60 Hz.

(6) Interval Timing. All timing shall be accomplished by digital methods and shall use power line frequency as a base. No cumulative or drift to setting errors shall occur in interval timing.

2. **Operation.** These specifications cover the minimum acceptable operating requirements for a pretimed fixed cycle traffic signal controller of solid-state microprocessor type. The controller shall be designed for operation on 120 V, 60 Hz, single phase AC electrical systems. Included are descriptions of the controller unit, time base coordinator, flasher, flash relay, and conflict monitor.

The pretimed controller shall be an interval oriented device. The conditions of the output circuits (load switch drivers) shall be programmable as to condition in each of the Signal Plan intervals. The interval sequence, interval timing, and output circuit condition are used to control the order in which traffic movements are assigned the right-of-way at the intersection and the time allocated to each. The controller unit shall be capable of operating as a master controller, isolated controller, or secondary controller without changes or additions.

The controller unit shall accept Timing Plan (Dial/Split) and Offset commands from traditional Interconnect systems, the internal systems interface, and/or from a companion Time Base program.

A. Keyboard.

(1) Programming. Programming of controller unit variables shall be via a front panel keyboard and display. For ease of front panel programming the controller shall utilize English language menus. The controller unit shall prevent the alteration of keyboard set unit variables prior to the user having entered a specific code. This "Access" code shall also be user programmable via the keyboard. All variables shall be displayed for visual verification concurrent with entry.

Operator programmable data shall be maintained in a non-volatile in EEPROM without 120 V, 60 Hz AC input applied to the controller. It shall be possible to remove the memory printed circuit board from the controller without losing user-programmed data.

The controller shall utilize alphanumeric characters for displaying on the front panel the current status of the controller or the operator programmable times as they are entered. It shall also be able to display previously entered data. The display shall have a minimum of 8 lines and up to 40 characters per line. The display shall be back lighted and have a front panel mounted contrast control. Character height shall be a minimum of 0.24 inches.

The display shall have two modes of operation. The first mode shall be a dynamic mode, it shall show the active timing interval(s) with countdown. The second mode shall be the program mode, it shall show the interval and time/data programmed and/or being programmed.

The controller shall have a minimum of four detector inputs each to provide for vehicle and pedestrian demand.

It shall be possible to program preempt to operate as a LOCK or NON-LOCK input. When programmed NON-LOCK, termination of the preempt input during the delay before preemption shall not initiate preempt.

(a) Programming Security. The controller unit shall maintain user programmable variables in non-volatile memory to assure continued safe and efficient controller unit operation in the event of power loss.

(b) Backup Programming. The controller unit shall contain a reserve data base of controller unit variables stored in Programmable Read Only Memory (PROM). It shall be possible for the operator to activate the reserve data base by loading it into memory through a simple procedure utilizing front panel controls only.

B. Time Base Coordination (TBC). The TBC module shall provide the additional features listed below:

(1) Clock/Calendar. Time of week may be displayed (DAY, HOUR, MINUTE, SECOND). Time of year may be displayed (YEAR, MONTH, DAY of MONTH). Daylight Savings time is automatic unless disabled.

(2) Program Transfer External. It shall be possible to transfer entire timing plan to another unit. It shall be possible to transfer entire event timetable to and from another

unit, to a lap top computer or directly to printer. It will print in a format easily understood by a traffic oriented individual.

(3) Auxiliary Outputs. There shall be three auxiliary outputs available. Each output shall be noncyclical, each totally independent of any other output. The output shall not be affected by any input, including ON-LINE input. The outputs may begin and/or end concurrently with another program.
(4) Scan. It shall be possible to scan forward or backward and observe all programmed events from any point in time. Auxiliary outputs and Special days may be scanned.

(5) Clock Standby Accuracy. Clock accuracy over the entire NEMA temperature range shall be within +/- .005 percent. Timing shall be maintained for a minimum of six months regardless of the number or duration of interrupts during battery operation.

(6) Data Entry. All TBC data (time/date, program numbers, auxiliary numbers) shall be placed in nonvolatile EEPROM memory via the keyboard or unit to unit transfer. A Programmable Read Only Memory (PROM) programmer is not required.

(7) Events. A traffic event shall consist of Dial, Offset, Signal Plan and Split with a time of occurrence. An auxiliary output event shall consist of auxiliary output(s) (1, 2 and/or 3) and a time of occurrence.

(8) Program Erase. Programs, auxiliary events and special days may be erased from memory individually. All programs, auxiliary events and special days may be erased simultaneously.

(9) Program Capacity. A minimum of 250 events may be programmed. A minimum of 50 special days may be programmed. The events may be over a 99 year time frame.

(10) Clock Monitor. Circuitry shall monitor voltage and provide sufficient battery voltage to maintain the clock in the event of a power failure.

3. **Traffic Control Cabinet.** This section defines the minimum acceptable requirements for a series of cabinets that differ in size, to house traffic signal controller units and related devices.

A. Outline dimensions shall be as shown in Table 4. All traffic control cabinet dimensions are in inches. These dimensions are outside dimensions exclusive of hinges, handles, overhang(s), vent housing, and adapters. Cabinet heights are measured to the lowest point of the top surface of the cabinet. The combined overhangs of the four sides of the cabinet shall not exceed 4 inches.

TABLE 4: MINIMUM OUTLINE DIMENSIONS

Size	Height	Width	Depth
4	51”	24”	16”
M36	51”	36”	16”

B. Mountings.

(1) Pole Mounted (Size 4). Cabinets intended for side of pole mounting shall be provided with any necessary adapter, exclusive steel banding, to permit mounting to a 4½ inch or larger diameter pole. The adapter shall accommodate lag bolts up to ⅜ inch and steel banding up to one inch wide. Mounting points shall be provided at or near the top and bottom of the cabinet. Cabinets shall be furnished without conduit holes.
(2) Base Mounted (M36). The M36 cabinet shall be constructed so it can be mounted on a 32 inch deep by 40 inch wide foundation. Anchor bolt mounting provisions shall be dimensioned for 2 bolts on 12 3/16 inch center (front to back) on 18 inch centers (side to side).

(3) Anchor Bolts. Anchor bolts for base mounted cabinets shall be ¾ inch diameter by 42 inches long which includes a 90 degree bend with a three inch leg. The end opposite the leg shall be threaded for at least three inches with a ¾ inch Unified Coarse Thread (UNC) -10 thread.

Anchor bolts shall be steel with a hot-dipped galvanized or zinc plate surface. Four anchor bolts, four nuts, and four washers shall be provided with each M36 cabinet.

C. Materials. The traffic control cabinet shall be constructed of aluminum alloy. The aluminum material shall be a minimum of 1/8 inch alloy sheet, *American Society for Testing and Materials* (ASTM) No. 5052-H32 or equivalent.

D. Finish and Surface Preparation.

(1) Painted Cabinets.

(a) The surface of the cabinet shall be suitably prepared prior to painting, to avoid paint pealing.

(b) Interior surface shall be painted white.

(c) The exterior of the controller cabinet and all mounting attachments shall be finished with a durable and weather-resistant protective coating having a total dry film thickness of not less than 1.5 mils. The final coat shall be aluminum in color, shall give complete hiding, and shall be at least 0.75 mil in thickness.

(d) If the painted surface is scratched or damaged, the affected area shall be repainted.

E. Top Surface Construction. The cabinet shall be manufactured so as to prevent the accumulation of water on its top surface.

F. Doors.

(1) Main Cabinet Door. The cabinet shall have a main door which permits access to all equipment within the cabinet. Doors shall be hinged on the right side of the cabinet as

viewed from the outside facing the cabinet door opening. They shall have a handle made of one piece construction and swing away from the locking mechanism.

(2) Hinges. All cabinet doors shall incorporate a piano type hinge utilizing stainless steel hinge pins.

(3) Door Stop. The cabinet doors shall be provided with a door stop which holds the door open a minimum of 90 degrees and 180 degrees (+/- 20 degrees).

(4) Latches and Locking Mechanism.

(a) All cabinets shall incorporate a main door lock, Corbin No. 15481RS or equivalent, constructed of nonferrous or stainless materials, which shall operate with a Traffic Industry conventional #2 key, Corbin No. 1R6380 or equivalent. A minimum of two keys shall be included for the main door of each cabinet.

(b) The cabinet door(s) shall be provided with a three-point latch. The top and bottom shall have rollers to secure the door in a closed position.

(c) When in the locked position, the lock shall prevent the movement of the three-point latching mechanism.

(d) The cabinets shall be provided with a means of externally padlocking the latching mechanism. A minimum of ⅜ inch diameter lock shackle shall be accommodated.

(5) Door Opening. The main door opening of all cabinets shall be at least 80 percent of the area of the side which the door closes, exclusive of the area of plenums.

(6) Plastic Doors. When called for on the plans, doors for the Size 4 and M36 shall be vacuum formed from gray ultraviolet (UV) inhibited ⅜ inch GPX 3800 Acrylonitrile Butadiene Styrone (ABS) plastic. Exterior surfaces of the door shall be laminated during the extrusion process with a .010 inch minimum thickness Pearl Gray Korad acrylic film for additional protection against ultraviolet degradation.

The doors shall have vacuum formed louvers for the cabinet ventilation system. The interior panel shall be vacuum formed from ¼ inch GPX 3800 gray ABS plastic and molded with ribs for rigidity and stability of the door and be provided with channels opposite the louvers for holding the cabinet's air filter. The door shall have a ⅜ inch wide door flange around the perimeter of the door that will properly fit the cabinet and gasket and provide a moisture proof seal.

The exterior of the door shall have a hair cell pattern with an overlay of the gray Korad. The interior and inside panel shall have a smooth finish without the overlay of gray Korad. All fasteners shall be stainless steel. A three point locking mechanism shall be provided. A heavy gauge continuous hinge shall have a 3/16 inch non-removable pin and attached to the cabinet with carriage bolts for vandal resistance. The door stop shall accommodate the standard cabinet door stop rod in the cabinet. A police door is not required on the plastic doors.

G. Shelves. The cabinet shall be provided with two shelves for supporting the control equipment. The shelves shall be at least ten inches in depth.

All cabinets shall have a provision for positioning shelves to within 12 inches of the bottom of the cabinet and to within 6 inches of the top of the cabinet in increments not more than ½ inch.

H. Cabinet Risers. The M36 shall be provided with a 15 inch high cabinet riser. The riser shall match the mounting base of the cabinet and be provided with anchor bolt holes on the top and bottom of the risers. The risers shall come in two parts for ease of assembly.

(1) Ventilation System. All cabinets shall incorporate a ventilation system so as to provide for the circulation of external air through the enclosure to remove excess heat, fumes, or vapors. When forced ventilation is required, each cabinet shall be equipped with an electric fan with a capacity of at least 100 cubic feet of air per minute.

(2) Fan. The fan shall be installed so that it operates in the filtered incoming air stream so as not to create a negative pressure within the cabinet relative to its outside environment. All fans shall be equipped with a guard which inhibits a user from making contact with the blades of the fan.

(3) Fan Controls. All cabinets equipped with a fan shall have a device to control the operation of the fan. The device switch-on point shall be manually adjustable at least in the range from 80°F to 120°F.

The device shall have a differential between its switch-on point and its switch-off point. This differential shall not be greater than 25°F. The device shall be located in the inside of the top of the cabinet not lower than six inches from the top of the cabinet.

(4) Filter. The cabinet shall be equipped with a device to filter the incoming air. The cabinets shall be provided with louvered vents in the main door with a replaceable air filter having a width of 16 inches, a height of 12 inches, and a thickness of 1 inch.

I. Terminal Facility.

(1) Mechanical Construction. The terminal facility shall conform to the following mechanical requirements.

(2) Terminal Identification. All terminals shall be permanently identified in accordance with the cabinet wiring diagram. Where through-panel terminal blocks are used, both sides of the panel shall have the terminals properly identified with the terminal position number.

Identification shall be permanently attached and close as possible to the terminal strip and shall not be affixed to any part which is easily removable from the terminal block panel.

Each input or output terminated on a terminal block shall be identified on the front of the panel by position number and function terminology. The same identification must be used consistently on the cabinet wiring diagram.

(3) Component Identification. All components which make up the basic terminal facility shall be permanently identified in accordance with the cabinet wiring diagram. The following components are considered part of the basic terminal facility:

(a) Load Switch Sockets.
(b) Flash Transfer Relay Sockets.
(c) Flasher Socket.
(e) Main and Auxiliary Circuit Breakers.
(f) Radio Interference Suppressor and Surge Protector.
(g) Mercury Signal Power Relay.
(h) Power Terminal Bus Bars.

Where through-panel components are used, both sides of the panel shall have the components properly identified by relative symbols (e.g., FRI, LS1, etc.).

Identification shall be permanently attached and as close to the component as possible and shall not be affixed to any part which is easily removable from the panel.

Each component shall be identified on the front of the panel by symbol and function terminology (e.g., LF1 Filter, BR1 Signal Bus, etc.). Provisions shall be made that each load switch socket may be identified by the phase number or signal number by writing on the panel with pencil or ball point pen in an area established for same.

(4) Field Connection Identification. In addition to the terminal identification required in the paragraphs above, provisions shall be made that each group of R, Y, G, etc., field signal hook-up or detector hook-up terminals may be identified by the interval number or signal by writing on the panel with pencil or ball point pen in an area established for same.

(5) Load Switch and Flasher Support. Load switch and flasher bases shall be so designed and constructed as to receive all such devices which may be manufactured to the maximum size requirements permitted under the current *NEMA Standards Publication*.

All support(s) shall be provided so that, as a minimum, it is supporting the flasher and load switch of the maximum size at some point(s) between three inches and seven inches from the panel.

At least 90 percent of the area beneath the load switch or flasher shall be open to allow for the free flow of air across the load switches or flasher. There shall be no obstruction within one inch above or below the units within the open area.

(6) Load Switch, Flasher and Flasher Transfer Positions. Wired load switch, flasher, and flash transfer relay sockets shall be provided in the quantities listed below:

TABLE 5: WIRED LOAD SWITCH, FLASHER, AND FLASH TRANSFER RELAY SOCKET QUANTITIES

Configuration	Load Switch	Flasher	Flash Transfer
24 Circuit	8	1	4
36 Circuit	12	1	6

The flasher socket shall be wired for a Type 3 solid state flasher conforming to Section 8 of current *NEMA Standards Publication*. Flashing of even numbered load switch output indications shall be placed on one circuit and flashing for odd numbered load switch output indications shall be placed on the other circuit. It shall be possible to flash either

the amber or red indication on any load switch outputs. It shall be possible to easily change the flash indication from the front side of the panel using simple tools without the need to unsolder or re-solder connections.

The load switch sockets shall be wired for triple-signal load switches conforming to Section 5 of current *NEMA Standards Publication*. All load switch driver outputs coming out of the controller unit shall be on separate terminal points from the respective inputs to the load switches. These separate points shall be bussed for normal operation. All load switch outputs which may be programmed for flashing or programmed for monitor connection shall be on separate points from the respective inputs to the flash transfer relays or monitor inputs. These separate points shall be bussed for normal operation. The above is to allow the pedestrian load switch position to function as a vehicle position or vice versa, and for each isolation for trouble-shooting purposes.

(7) Terminal Blocks. Terminal blocks shall have mechanical characteristics to properly support the wiring connected without warping the terminal block. The threaded portion of the terminal block shall be metal. The material used shall be compatible with copper wire.

(8) Field Terminal Blocks. Field terminal blocks for all inputs and outputs for a fully expanded controller shall be included. These blocks shall be either single terminal type with through-panel connection on the rear side of the mounting panel or double binder head screw terminals. Either type of terminal block used shall be of the correct ampacity for the application. Minimum acceptable ratings are 30 amperes, 300 V, with 8 - 32 x 5/16 inch binder head screws.

(9) Control Terminal Blocks. Control terminal blocks for inputs and outputs of the controller unit, monitor unit, flash transfer relays, load switches, etc., shall be included. These blocks shall be either single terminal type with through-panel connections or double binder head screw terminals. Either type of terminal block used shall be of the correct ampacity for the application. Minimum acceptable ratings are 15 amperes, 250 V, with six 32 x ¼ inch pan or binder screws.

The control terminal block wiring shall provide groupings of functions based on probable interconnect (bussing) for normal operation rather than based on the source of the wiring (e.g., controller, monitor, etc.). The above is to allow for easy reprogramming or isolation for trouble shooting purposes.

J. Controller Unit and Monitor Harness. The controller unit and monitor harnesses shall be neatly arranged and provided with the flexibility for the connectors to reach at least 40 inches from the top of the terminal block panel which shall be mounted directly below the controller unit shelf.

Terminal positions must be provided, completely wired and neatly arranged, providing access to all inputs and outputs listed in the controller unit specification. As a minimum, all *NEMA Standards Publication* functions of the controller unit for the configuration selected shall be terminated except those designated by *NEMA* as spares, reserved, no connection, and manufacturer's use need not be installed in the harness.

Terminal positions must be provided, completely wired and neatly arranged, providing access to inputs and outputs in the monitor. All conflict monitor input channels that can be used to monitor the maximum number of signals available in a given configuration shall be terminated. The conflict monitor supply, inputs, and outputs not required to be

used in a particular configuration need not be installed in the harness. Provision shall be made to terminate any unused red monitoring inputs.

The monitor harness shall be configured for a 6 or 12 channel unit as follows:

TABLE 6: MONITOR HARNESS CONFIGURATION

Configuration	Load Switch	Monitor
24 Circuit	8	6 Channel
36 Circuit	12	12 Channel

K. Power Distribution. The following equipment shall be supplied as part of the power distribution panel:

(1) Main Circuit Breaker
(2) Three Auxiliary Circuit Breakers
(3) Mercury Signal Power Relay
(4) Radio Interference Suppressor and Surge Protector
(5) AC- Common Bus Bar
(6) Safety Ground Bus Bar
(7) AC+ Power (Filtered) Bus Bar
(8) AC+ Power (Unfiltered) Bus Bar

L. Cabinet Light. An incandescent light, with switch, shall be installed in the cabinet. The switch to activate the light shall be provided in a panel on the inside of the front cabinet door. It is acceptable that the duplex receptacle and light share the same fuse.

M. Duplex Receptacle. A duplex of the three-wire grounding with an integral ground fault interrupter shall be provided in a panel on the inside of the front cabinet door. The receptacle and wiring shall have an amp capacity of 15 amperes. The receptacle shall be wired after main circuit breakers and fused separately from other circuits.

N. Conduit Holes. Size 4 cabinets shall be furnished without conduit holes.

O. Solid-State Load Switching Assemblies. Cube-type solid-state load switching assemblies, in accordance with current *NEMA Standards Publication*, shall be used for opening and closing signal light circuits and shall be jack mounted external to the controller unit. Eight load switch assemblies shall be provided (24 circuits). The load switch assemblies shall have indicators for active inputs and outputs.

P. Electrical switching devices (exclusive of bus feed) shall have a minimum rating of 120 V at 60 Hz with a minimum current carrying capacity of 10 amperes. Signal circuit wiring shall have a 10 ampere capacity with a minimum wire size of 16 American Wire Guage (AWG). Wiring and terminals from the input power point to the signal bus shall have a 60 ampere capacity and a minimum wire size of 8 AWG. All manually operated switches shall be located in the controller remote from any electrically energized parts and otherwise oriented to minimize the danger of electrical shock to personnel operating the equipment.

Q. Interconnecting Circuits. Interconnect circuits shall be fused with two ampere, 250 V, dual element slow blowing type fuses, ¼ inch in diameter and 1¼ inches long.

R. Wiring. All connecting wires shall be neatly arranged and suitably bound. All wires and terminals shall be suitably identified. Field signal terminals shall be coded in a numerical or alphabetical sequence.

S. Signal Light Power Switch. Each controller shall be provided with a switch for disconnecting the power to the signals.

T. Remote or Local Control of Flashing Feature. Controllers shall be so designed that when interconnected in a system and supervised by a master controller, the flashing feature for signal lights at all local controllers shall be obtainable at the master controller. Manual switching to flashing shall also be possible at each controller with this manual control having operating precedence over any supervisory remote controls.

U. Power Shutdown. One 30 amp circuit breaker shall be capable of being used as a shutdown switch for complete deactivation of the 24 circuit facility and two 15 amp circuit breakers for the auxiliary items. They shall be Square D series QO circuit breakers, mounted on a QON2ACL breaker block and listed for use as service disconnect. This service hookup must meet current National Electrical Code (NEC), and Michigan Department of Labor and Economic Growth electrical codes.

V. Flashing Mechanism Unit.

(1) General Requirements. A manual switch and automatic time switch connections shall be provided to permit the substitution of flashing signal indication for the normal automatic time cycle. The flasher mechanism shall be a separate jack mounted unit such that flasher operation can be obtained with the complete controller mechanism removed. The control housing panel shall be wired for separate feeds to the signal light bus and controller in order that the controller shall continue running during flashing operation. This flashing unit shall be designed to operate on 120 V, 60 Hz, single phase AC electrical systems. The flashing unit shall be a *NEMA Standards Publication* Type 3, dual circuit, with indicator lights and be of the cube type.

(2) Flash Transfer Control. The flash transfer relay socket shall be wired so the coil of the relay(s) shall be de-energized for flashing operation. The control circuit to the flash transfer relay sockets shall be such as to provide flashing operation when the monitor detects a conflict, loss of red, voltage failure, etc. The control circuit to the flash transfer relay sockets shall be as to provide for options (e.g., police panel, flash-normal switch, etc.) to call for flashing operation.

W. Monitor Control. The monitor shall be wired so as to provide flashing operation as noted in above. It shall also provide "Stop Time" to controller unit when it detects a conflict, loss of red, voltage failure, etc. The monitor shall be wired so as to provide an "External Start" signal to the controller unit upon the application of AC power to the monitor following a power interruption or upon initial turn-on.

X. Main Power Arrester. An ACP340 surrestor shall be installed as the main power protector.

Y. Power. The controller unit shall be designed for use on nominal 120 V, 60 Hz single phase alternating current. It shall operate correctly in the range of 89 to 135 V AC at a frequency of 60 Hz.

4. **Functional Operation.**

A. General. The Controller Unit shall provide the following operational features:

(1) A minimum of four Dials (cycles).

(2) Four Splits per Dial (cycle).

(3) Three Offsets per Dial/Split combination.

(4) A minimum of 32 intervals per Dial/Split.

(5) A minimum of 24 signal circuits but capable of 36 circuits.

(6) Four Signal Plans, each with alternate sequence programming and inputs from four vehicle and four ped detectors.

(7) Up to six complete and separate Preemption Programs and six Low Priority routines.

(8) Sync out for use as system master.

(9) Operation on standard 120 V, 60 Hz, AC pretimed interconnect inputs without external interface.

B. Dial (Cycle).

(1) A minimum of 4 cycles shall provide 30-999 seconds minimum in 1-second increments. The cycle time of each Timing Plan shall be the sum of the interval times of the longest path in the signal plan.

(2) The Dial (Cycle) shall be selected by application of 120 V, 60 Hz, AC to the input connector and also be able to be manually selected from the keyboard.

(3) A visual indication of the Dial currently in effect and a dynamic display of the cycle seconds shall be provided.

(4) Transfer from one Dial to another shall occur at the end of the interval in effect at the time of request for transfer, unless that interval is programmed to prohibit transfer.

C. Offset.

(1) Three Offsets shall be provided for each Dial/Split combination.

(2) Each Offset for each Dial/Split shall be individually programmable from 0-999 seconds in 1-second increments. The programmed Offset shall define the number of seconds by which the beginning of interval #1, local time zero, shall follow the system sync pulse.

(3) Offset shall be selected by application of 120 V, 60 Hz, AC to the input connector and be manually synchronized from the keyboard.

(4) A visual indication of the offset currently in effect shall be provided.

(5) Offset transfer shall be programmable to use shortway or dwell transfer procedures. If shortway method is programmed, the Controller Unit shall seek a new offset in the

shortest direction by adding or subtracting with the rate of offset change never exceeding 18.75 percent points per cycle. Shortway Add Only - shall only add up to 18.87 percent. If dwell (maximum or variable) is called for, the Controller Unit shall dwell in the programmed interval for a maximum (0-999 seconds in 1-second increments) or until a sync pulse is received while the Controller is dwelling. Following the timing of a full offset dwell interval, the absence of a synchronization pulse prior to the beginning of the next dwell interval shall cause the Controller Unit to ignore the dwell time and run free (non-interconnected) until the receipt of a valid synchronization pulse.

D. Split.

(1) Four Splits shall be provided for each Dial (cycle).

(a) Splits shall be capable of being programmed independently of any signal plan and also shall be capable of being “tied” to the corresponding signal plan.

(2) Each Split for each Timing Plan shall consist of a programmed number of intervals, a minimum of 32, and shall be individually programmed. The same number of intervals shall not be necessary for all splits.

(3) Split shall be selected by application of 120 V, 60 Hz, AC to the input connector and also be able to be manually selected from the keyboard.

(4) A visual indication of the split currently in effect shall be provided.

(5) Transfer from one split to another shall occur, upon command, at the end of the interval in effect at the time of request for transfer, unless that interval is programmed to prohibit transfer.

E. Interval.

(1) A minimum of 32 intervals shall be provided for each combination of Dial and Split.

(2) The timing for each interval shall be programmable between 0-999.9 in 0.1 second increments for each of the 4 Splits in each of the 4 Dials.

(3) It shall be possible to copy the timing values for any Dial and Split into any other Dial and Split in one operation.

(4) When less than 32 intervals are required, it shall be possible to specify and program only the number used. Programming zero times for unused intervals shall not be required.

(5) The following interval related intersection configuration data shall be programmed in non-volatile EEPROM memory for each interval of each signal plan:

(a) Each interval shall be capable of being named as an actuation interval through input 1 and/or through input 2. If a valid call is not placed on this interval, the allotted time shall be automatically added to a designated default interval. Each interval shall also have the capability of being a RESET interval of input 1 and/or input 2.

(b) Each interval shall be programmed as either fixed or variable for purposes of shortway offset changes. Each interval shall be programmed as either self-timing or non self-timing when Manual Control Enable or System Control is asserted.

Operation of Interval Advance input shall immediately terminate non self-timing intervals, but shall have no effect on self-timing intervals.

(c) Minimum time for the intervals. The range shall be 0-99.9 seconds in 0.1 second increments. Minimum interval time shall not be violated by programmed time. The Controller Unit will time no less than the minimum and indicate an error in programming.

(d) Each interval shall be able to be programmed to control the display shown on up to 12 load switches. The status of each load switch shall be one of the following: RED, GREEN, YELLOW, FL-RED, FL-GREEN, FL-YELLOW, RED and GREEN, or DARK.

(e) Each interval shall be capable of specifying the signal plans (if any) to which transfer would be safely allowed.

(f) Each signal plan shall provide for a selection of three alternate signal sequences, plus a default sequence, based upon a detector 1, detector 2 or detector 1 plus 2 input. An alternate set of detectors (detector 3 and detector 4) may be used if required for the proposed sequence. This shall provide a means of selecting one of the interval sequences in response to a detector input without the necessity of changing signal plans. Different interval paths, within a signal plan, may be followed during a given cycle, depending upon an external detector(s) input.

(6) Driver and Remote Flash control shall be provided to allow:

(a) Driver control as either vehicle or pedestrian so that the intersection display status and preemption operation are correct.

(b) Remote flash control to allow the controller to flash certain load switches when remote flash is called for. It shall be possible to flash either Red or Yellow and alternate if desired.

F. Displays. The Controller Unit shall provide a **simultaneous** dynamic display of the following operational status:

(1) Dial, offset, signal plan, split, preempt, and interval in effect.

(2) Time remaining in the cycle.

(3) Offset correction method in effect.

(4) It shall be possible to display data previously programmed through the keyboard. The parameter called for and its current programmed value shall be displayed. The Controller Unit shall continue in uninterrupted cyclic operation during any interrogation of currently programmed values. After entry of the proper access code, it shall be possible to change any front panel programmable values.

(5) The controller unit shall utilize a liquid crystal display, with back lighting, providing multi-segment alphanumeric characters (with a minimum height of 0.24 inches) for displaying programming information and controller timing. The display shall be clearly readable in ambient light including the cabinet light or full sunlight from a distance of 4 feet at a 45 degree angle, 8 line by 40 character display. The display shall have two modes of operation. The first mode shall be a dynamic mode, it shall show the current

timing interval and the time remaining in that interval. The second mode shall be a program mode, it shall show the interval and time/data programmed and/or being programmed.

(6) Concurrent Real Time Displays. The controller shall display a dynamic current real time status of interval, interval time, and signal plan. Concurrent real time displays shall be provided for, coordination timing, telemetry, preemption, detectors, intersection status and TBC. As a minimum, the real time displays shall provide concurrent active status for the following conditions:

(a) Coordination active timers shall simultaneously display, for interval timing cycle timing, offset active, current cycle length in seconds, offset in seconds, correction mode in effect, local cycle countdown, system cycle count up, offset in last cycle zero, correction of current cycle, time base interconnect, system, backup, manual control or standby in effect or control and interval minimum time set.

(b) The telemetry status shall simultaneously display the on line-off line status, active or non active carrier frequency, receiving or transmitting data and the validity of data received and/or transmitted for two ports.

(c) The preemption status shall concurrently display the real time status of a minimum of 6 preemptions for preemption in control, preemption call (preemption or low priority call), timing of (ped or min. green, ped or vehicle clearance, track greens and clearance, dwell green), delay before preemption, and duration of preemption.

(d) The detector status display shall simultaneously indicate the current status of up to 12 detectors. It shall indicate the status of both special and group detectors and whether they are on line or failed. The display shall indicate whether the failure was due to max presence, no activity or erratic count.

(e) The intersection display shall simultaneously indicate the active status of 12 load drivers and the red, yellow, green, and walk, and don't walk status of each driver and whether the vehicle and/or pedestrian detectors have a call or recall.

(f) The TBC shall simultaneously display the current month, day, year, time (hour, minute, second) and whether it is standard or daylight savings time; the day and week program in effect, the dial, split, and offset in effect, the status of three auxiliary and diagnostic outputs and the status of the dimming function.

G. Signal Circuits.

(1) The Controller Unit shall provide a minimum of 36 signal circuits. The number implemented shall be as required to provide the specified signal sequence.

(2) The ON/OFF FLASH and COLOR state of each implemented signal circuit during each interval for each signal plan shall be programmed in EEPROM.

(3) The flash rate of any signal circuit programmed to FLASH shall be 60 times per minute with a 50 percent duty cycle.

H. Signal Plans.

(1) The Controller Unit shall be capable of implementing four different Signal Plans.

(2) All signal plans need not have the same number of intervals.

(3) Signal plan shall be selected by application of logic ground to the input connector and manually from the keyboard.

(4) Each of the four vehicle detector input shall be capable of being programmed to operate in (1) NON-LOCK mode, (2) LOCK mode and (3) RECALL mode.

(a) Detector Delay/Extension. The following special vehicle detector functions shall be provided for each of the four group detectors:

(i) Delay. The group vehicle detector actuation (input recognition) shall be capable of being delayed, by an adjustable (00-999 seconds), when not in the actuated interval associated with the detector. Once the actuation has been present for the delay time it shall be continued for as long as it is present.

(ii) Extend. The group vehicle detector actuation (input duration) shall be capable of being extended from the point of termination by an adjustable time (0-99.9 seconds).

The special vehicle detector functions shall be capable of being used in any combination. The sequence is that an actuation shall be extended first and delayed second.

(5) The Controller Unit shall operate in accordance with the programmed values for the selected dial, offset and split for the signal plan in effect. Signal Plan EEPROM programming shall affect the ON/OFF/FLASH and COLOR condition of the load drivers for each interval.

(6) During any controller cycle, it shall be possible to operate in any 1, 2, 3, or all 4 signal plans independent of split.

(7) A visual indication of the signal plan currently in effect shall be provided.

I. Preempt.

(1) The Controller Unit shall provide an EEPROM for preemption capable of containing a minimum of six complete and separate sequences.
(2) Minimum time for the intervals shall be specified in the EEPROM programming. The range shall be 0-99.9 seconds in 0.1 second increments. Minimum interval time shall not be violated by programmed time. The Controller Unit will time no less than the minimum and indicate an error in programming.

(3) It shall be possible to program the ON/OFF FLASH and COLOR condition of all implemented signal circuits independently for each preempt interval.

(4) It shall be possible to program preempt operation to proceed sequentially through the preempt intervals and hold at the end of a specified interval.

(5) It shall be possible to specify the interval(s) in the preempt plan during which normal cyclic operation resumes.

(6) It shall be possible to program a delay between the time the preempt input is asserted and implementation of the preempt plan. The range of this delay shall be 0-999 seconds in 1-second increments.

(7) It shall be possible to program the preempt input to operate as a LOCK or NON-LOCK input. When programmed NON-LOCK, termination of the preempt input during the delay before preemption shall not initiate preempt operation.

(8) A visual display shall be provided of the condition of the preempt inputs and the preempt plan interval in effect.

J. Master-Secondary.

(1) The Controller Unit shall provide a sync output for 3 seconds of the cycle length.

(2) Any Controller Unit shall be able to operate as a master controller or as a secondary without requiring any changes in the unit itself.

(3) When used as a master controller, it shall not be necessary to program the Controller Unit's offsets to 0.

(4) When operated as a master controller system, supervision shall be maintained during flash operation.

K. Interconnect.

(1) The Controller Unit shall operate in existing pretimed systems. Interconnect requirements shall be as follows:

(a) Cycle 1, 2, 3, 4 - 2 conductors, 120V, 60 Hz, AC
(b) Reset 1 - 1 conductor, 120V, 60 Hz, AC
(c) Reset 2 - 1 conductor, 120V, 60 Hz, AC
(d) Reset 3 - 1 conductor, 120V, 60 Hz, AC
(e) Split 1, 2, 3, 4 - 2 conductors, 120V, 60 Hz, AC
(f) Flash Common - 1 conductor, 120V, 60 Hz, AC

(2) Sync shall be absence of 120V, 60 Hz, AC on the reset lines for 3 seconds.

L. Miscellaneous Features.

(1) The Controller Unit. The controller unit shall be capable of being programmed to commence operation with its flash output asserted upon resumption of power after a 0.5 - 1.0 second outage. The duration of the flash time shall be programmable between 0-99 seconds in 1-second increments.

The interval in which normal cyclic operation will commence shall be programmable. It shall be possible to program, for each signal plan, an interval at the end of which flashing shall commence upon energization of the flash input and an interval in which to commence normal cyclic operation upon de-energization of the flash input.

(2) The Conflict Monitor shall:

(a) Comply with current *NEMA Standards Publication TS1*, and be compatible with the terminal facilities.

(b) Detect simultaneous display of green and yellow lights on a channel.

(c) Detect simultaneous display of green and red lights on a channel.

(d) Detect simultaneous display of yellow and red lights on a channel.

(e) Detect minimum yellow display following a green on a channel.

(f) Monitor AC+ line voltage for burn out, power interruption and blinking and dimmed lights.

(g) Shall be a separate shelf mounted unit.

(h) Shall be a *NEMA Standards Publication* Type 6 or 12 as required.

(i) Shall provide a liquid crystal display that will provide active status of red, yellow, green, and walk inputs for each channel monitored. There shall be a real time clock/calendar with automatic daylight saving time to keep track of errors. The monitor shall maintain a complete log of a minimum of nine previous faults in non-volatile memory for review via front panel buttons. The data log shall display the date, time, fault and signal condition of each channel monitored at the time of fault. The data log shall display the following fault conditions: conflict, red fail, minimum yellow clearance, dual indications, CVM/WD, +24V-1, +24V-2 and program card absence and BND.

M. Error Codes. The Controller Unit shall inform the operator through the display when an error has been made in programming. Error displays shall be available for the following as a minimum:

(1) Programmed cycle length does not equal sum of programmed interval lengths.

(2) Offset setting is greater than cycle length.

(3) Keyboard programmed interval length is shorter than minimum time.

N. Startup Flash. The Controller Unit shall be capable of being programmed to commence operation with its voltage monitor output deactivated after a long power outage. This shall cause the conflict monitor to place the intersection on flash. The duration of the flash time shall be programmable through the keyboard in the range of 0-99 seconds in 1-second increments.

O. Dimming. The controller unit shall be programmed to provide output dimming based on a Time Base Auxiliary Event or an interface input.

The dimming function within the controller unit shall be accomplished by controlling the load switch driver outputs with respect to the AC line voltage. The programmed outputs, when "ON," will be turned "OFF" in alternate half cycles of the AC line.

The user control shall be by selection of which load switch driver will have a "Dimmed" output (color by color by driver).

P. Diagnostics. The controller unit shall be provided with a resident series of diagnostic capabilities describing its own internal state. It shall not require internal access or changes to the controller unit to initiate diagnostic programs.

(1) Automatic Diagnostics. The controller unit shall perform diagnostics enabling operator verification of proper operation.

The "automatic" diagnostics shall be performed without an operator request. The diagnostics evaluation shall be displayed on the controller unit front panel display.

(2) Processor Monitor. The controller unit shall contain provisions to monitor the operation of the microprocessor. The monitor shall receive signals, at least, once every 100 milliseconds from the microprocessor. When the signal is not received for 200 milliseconds +/-20 percent, the processor monitor shall initiate flashing operation (Voltage Monitor output inactive). When flashing is initiated as a result of the processor monitor, it shall illuminate a front panel indication labeled "Watchdog". The monitor shall be deactivated when there is a power failure and become active when restored.

The monitor shall attempt an automatic restart of the microprocessor to the power up Start-Up Flash timing condition. The controller unit shall operate as though power had been removed long enough for a full restart and reapplied. The front panel Watchdog indicator shall remain illuminated until the controller unit front panel has been manually addressed.

(3) Operator Initiated Diagnostics. The controller unit shall perform diagnostics enabling operator verification of properly operating inputs, outputs, keyboard, and display.

The "operator initiated" diagnostics shall be performed only after an operator request through the controller unit front panel. The technique used shall be relatively simple. It shall suspend normal traffic operation during the test and the controller unit shall be plugged into Suitcase-Sized Controller Test Set. The diagnostics evaluation shall be displayed on the controller unit front panel display and/or indicators on the suitcase tester as an operator interface.

(a) Inputs. The controller unit shall provide test routines to enable operator verification that input functions are proper. This test shall determine whether the input buffers are operating correctly. Each output shall be actuated in a fixed sequence. The user shall observe the front panel display and determine correct operation.

(b) Outputs. The controller unit shall provide test routines to enable operator verification that output functions are proper. This test shall determine whether the output drivers are operating correctly. Each output shall be actuated in a fixed sequence. The user shall observe the output sequence and determine correct operation.

(c) Display. The controller unit shall provide test routines to enable operator verification that display functions are proper. This test shall determine whether front panel drivers and decoders are operating properly. All the indicators shall be activated. The user shall observe the front panel display and determine correct operation.

(d) Keyboard. The controller unit shall provide test routines to enable operator verification that keyboard functions are operating correctly. The operator shall test

each of the controller unit keys. The numeric display shall indicate the key pressed. The user shall observe the front panel display and determine correct operation.

Q. Traffic Analysis Functions. The following desired capabilities shall be provided.

(1) Alarm Monitoring/Events Logging. The controller shall monitor and log the status of the following functions for subsequent uploading to an on-street or central office master, or viewing on the front panel:

Cycle Fault	Voltage Monitor	Preempt
Coord Fault	Conflict Flash	Local Free
Coord Failure	Local Flash	Special Status
Cycle Failure	Remote Flash	Power On/Off
Conflict Monitor Log		

A Local Alarms Report shall be generated with the capacity for up to 80 alarm events, including date and time of occurrence. Once logged, the alarms shall remain until the report capacity is exceeded at which time the oldest alarm shall be deleted and the new one added. This report shall be output to the front panel display, to the printer port, and to the 25 pin RS232 port.

(2) System Detectors.

(a) Detector Data. The controller shall have the ability to receive input data from up to eight (special) detectors in addition to the normal four group detectors as (group) detectors.

The controller shall process all system detector's data, consisting of volume and occupancy, and shall be capable of transmitting the results of this processing to either the on-street or central office master monitor. As a minimum the following parameters shall be determined:

Raw volume count, raw occupancy
Average occupancy percent
Average volume percent
Volume + occupancy percent

(b) Detector Report. The controller shall generate a System Detector Report based on an operator determined logging interval and sample period. The report shall include raw volume and occupancy along with averaged volume and occupancy percent for the sample period. This report shall have the capacity to store up to 96 sample periods. A sample period data set shall remain until the report capacity is exceeded at which time the oldest sample period data set will be replaced by the new data set.

(c) Detector Diagnostics. Each detector, both group and special system, shall be tested by a diagnostics routine for conformance to specified parameters. The detector diagnostics shall monitor activity on each detector for constant calls, absence of calls, and erratic output. These parameters shall be user programmable.

A detector shall be classified as 'on-line' when the results of the monitoring and diagnostic procedures determine that data from the detector is within the allowable range.

Detectors which have failed the diagnostics and those subsequently operating within diagnostic parameters shall be automatically logged in a Detector Failure Report, including date and time of occurrence. This report shall have the capacity to store up to 20 diagnostic events and the event shall remain until the report capacity is exceeded.

(3) Speed Traps. The controller shall provide speed monitoring capability in the form of a Speed Trap function. The controller unit shall provide for up to 2 independent Speed Traps with operator selectable detector spacings of either 11 or 22 feet, dependent upon the application. Provision shall be made in the controller to monitor the speed in miles per hour (MPH) or kilometers per hour (KPH).

A nominal speed range shall be settable for each pattern, with the percent of vehicles higher, within and lower than this nominal speed ranged logged for reporting.

A Speed Report shall be provided and shall have the capacity to store up to 12 patterns of Speed data. The pattern Speed data shall remain until the report capacity is exceeded at which time the oldest pattern speed data shall be deleted and the new data added.

(4) Reports. In addition to the above described reports, the controller shall provide a Comm Report which will allow the user to view a list of communication faults along with date and time of occurrence. This report shall have a minimum capacity of storing up to 20 events (faults). The fault event, including date and time of occurrence, shall remain until the report capacity is exceeded at which time the oldest fault shall be deleted and the new fault event added. In regard to communications, indication shall be provided on the front panel of the controller unit to denote when a carrier signal is being received, valid data is being received and when the unit is transmitting.

The conflict monitor report shall provide a record of all conflict logged events as reported from an Eberlie SSM-xxLEC (if called for on the bid sheet). This record of events shall be reported in the conflict monitor report of each local controller and shall be accessible through communication with the MARC master.

(5) Communications. Each local intersection controller shall be provided with an internal modem which allows the reception of Central Office Master and On Street Master commands and the transmission of local intersection data to the respective site without modification of hardware or software.

5. **Input/Output Requirements.**

A. General. All inputs and outputs, except those specified in Section 4, paragraph 4.11.1, shall conform to the requirements of current *NEMA Standards Publication*.

B. Inputs. In addition to the interconnect inputs specified in Section 4, paragraph 4.11.1, the following inputs shall be provided:

(1) 120V, 60 Hz, AC.

(2) Four vehicle and four pedestrian detector inputs shall provide a means to enter vehicle and pedestrian demand.

(3) Stop Timing upon assertion shall cause all timing to be discontinued. When stop timing is removed, timing shall resume.

(4) External Start shall cause the controller to assume its programmed initialization conditions and commence normal operation upon removal of the input.
(5) Remote Flash shall advise the Controller Unit that flashing has been requested by a remote source.

(6) Six Preempt Inputs shall, upon assertion, cause initiation of the selected preemption sequence.

(7) Interval Advance shall cause immediate termination of the normal cyclic interval in effect. It shall not affect preemption plan intervals.

(8) Manual Control Enable shall place calls on all detector inputs utilized and stop timing in all intervals except those programmed as self-timing under manual control. Interval advance shall be used to advance the controller from non self-timing intervals, but shall have no effect during self-timing intervals.

(9) System Control shall operate the same as Manual Control Enable, but shall not place calls on the detector inputs.

(10) Master/Secondary shall determine whether the Controller Unit is acting as a master or a secondary.

(11) Signal Plan 1, 2, 3, 4 - 2 conductors, +24VDC, ground true.

C. Priority of External Control Inputs. A determination of priorities is necessary when two or more external control inputs are applied at the same time. The relative priorities of external control which may conflict shall be as follows:

(1) Power-Up.
(2) External Start.
(3) Interval Advance.
(4) Stop Timing.
(5) Manual Control Enable.
(6) System Control.

The lower priority function shall be completely negated by the presence of higher priority function, except that Manual Control Enable and System Control shall condition Interval Advance.

D. Power Fail and Start-on. The procedure following a power interruption shorter than 500 milliseconds shall be for the Controller Unit to operate as though the interruption had not occurred. For a power interruption of more than 500 milliseconds, but less than 1,000 milliseconds, the Controller Unit shall either operate as though the interruption had not occurred, or shall revert to its initialization condition. For a power interruption longer than 1,000 milliseconds, or application of an External Start input, the Controller Unit shall assume its programmed initialization conditions and place detector calls on all implemented detector inputs prior to resuming normal cyclic operation.

E. Outputs. The following outputs shall be provided:

(1) Signal Circuits. A separate output shall be provided for each Signal Circuit.

(2) Three Resets shall be asserted for three seconds of the cycle length commencing at the 0 point of the master counter.

(3) Logic Ground. Voltage reference point and current return for Controller Unit input and output logic circuits.

(4) Controller Unit Voltage Monitor an open collector output which shall be maintained TRUE (low state) only as long as the voltage within the Controller Unit does not drop below predetermined levels required to provide normal operation.

(5) Regulated 24 volts DC for External Use:

(a) Regulated positive 24 +/- two volts DC, regulated over an AC line voltage range of 89 to 135 volts and from no-load to full-load.

(b) Current capability shall be 250 milliamperes continuous with less than 0.5 volts peak-to-peak ripple.

6. **Service Requirements.**

A. Circuit boards shall be readily accessible for maintenance. Extender boards may be used for this purpose.

B. For ease of troubleshooting, the rear of each module connector point on the motherboard shall be accessible by removing the cover. For maintenance purposes, it shall be possible to operate the controller unit with the cover removed.

C. All power supply tracks on the motherboard shall be identified with respect to the voltage it is supplying. Any input or output which goes to the MS connectors shall not be run through a separate wire harness to the appropriate module.

D. All components mounted on the printed circuit board shall be identified by a silk-screen component designation number.

E. The manufacturer shall provide with the bid a certified letter from an independent laboratory stating that the controller unit has been successfully tested in exact accordance with applicable portions of *Part 2, Environmental Standards and Test Procedures of the current NEMA Standards*.

7. **Exceptions.** Any exceptions to these specifications **shall** be described in detail by the bidder in his proposal. Failure to do so may result in the bidder being disqualified.

8. **Prints, Functional Data and Parts Lists.** With each controller, the manufacturer shall supply each of the following items: (1) two complete sets of schematic and wiring diagrams of the controller and terminal facilities, (2) a complete set of instructions for installation and maintenance of the controllers, and (3) a complete parts list. Each of these items shall apply directly to the controller with which it is supplied.

9. **Packing and Marking.** Except as otherwise specified in the request for quotation, each controller shall be packed separately in such a manner that there will be no injury or defacement to the controller during transportation to the point of destination. Each carton shall be legibly marked with the controller description, purchase order number and vendor's name.

10. **Sampling and Testing.** One or more controllers may be selected at random from the shipment and tested in accordance with department methods for compliance with the requirements of these specifications. If so notified by the department, the contractor shall complete one controller for preliminary testing and inspection to determine compliance with these specifications. If this one controller conforms to these specifications, the contractor will be notified in writing and shall furnish the remainder of the order, which will be subject to testing in accordance with departmental methods. If the preliminary sample does not conform to these specifications, either the order will be canceled or the vendor will be notified, in writing, of all deficiencies so that the necessary changes or corrections to all controllers on the purchase order may be made. The entire order will then be subject to testing in accordance with departmental methods.

11. **Patented Processes and Materials.** The vendor shall defend any and all patent infringement suits resulting from the use of any design, device, material or process, or portion or phase thereof, employed in the manufacture or use of said controllers in accordance with the department's plans and specifications, and shall save harmless and indemnify the department on account of any and all such suits or claims for royalties, damages or costs.

c. Construction. The furnishing and installation of the Solid-State, Pretimed, Interval Oriented Traffic Signal Controller shall be as indicated on the plans. All work shall comply with Sections 819 and 921 of the Standard Specifications for Construction and this special provision.

d. Measurement and Payment. The completed work as described will be measured and paid for using the following contract items (pay items):

Contract Item (Pay Item) Pay Unit

Controller and Cabinet, Solid State, TBC.....Each
Controller and Cabinet, Solid State, TBC, Delivered .....Each

MICHIGAN
DEPARTMENT OF TRANSPORTATION

SPECIAL PROVISION
FOR
4 OR 16 PHASE DIGITAL ACTUATED
NEMA TYPE TRAFFIC CONTROLLER ASSEMBLY

a. Description. Furnish all labor, equipment, and material required to install a fully actuated 4 to 16 Phase Digital *National Electrical Manufacturers Association* (*NEMA*) Type Traffic Signal Controller to provide intersection traffic control operations to meet the requirements of the *Michigan Manual on Uniform Traffic Control Devices* (MMUTCD). This includes the controller and cabinet complete mounted on a steel or wood pole or on a new concrete foundation (if required) and furnishing and installing all necessary equipment, hardware, conduit risers, cable, wiring, necessary rewiring of signal head(s), grounding, and other material necessary to complete the work. This also includes furnishing and delivering the controller and cabinet to the maintaining agency for timing and setting-up the controllers and cabinet as specified herein and as shown on the plans.

b. Material. Material shall meet Sections 918 and 921 of the Standard Specifications for Construction and this special provision.

1. Controller Timer.

A. Scope. The purpose of this document is to describe the minimum acceptable design and operating requirements for a fully actuated 4 to 16 phase traffic controller with a full complement of operational, programming and diagnostic capabilities. The controller shall include comprehensive traffic control, analytical and management capabilities utilizing efficient, menu structured traffic oriented/English language operator interface.

B. Environmental Standards. The controller unit shall perform all of its functions within the environment as defined by current *NEMA Standards Publication TS 1* and *TS 2*. The controller unit shall meet or exceed the applicable sections and clauses of current *NEMA Standards Publication TS 1* and *TS 2*, Section 2, with respect to each of the following functions:

Operating Voltage	Transients, Power Service
Operating Frequency	Transients, Input-Output Terminals
Power Interruption	Nondestruct Transient Immunity
Temperature and Humidity	Vibration and Shock

C. Controller Unit. This section defines the physical, interface and functional requirements of solid state controller units which fully conform to the current *NEMA Standards Publication TS 1* Parts 2, 13, and 14 and *TS 2* Parts 2 and 3.

(1) Definitions. Current *NEMA Standards Publication TS 2*, Section 1 shall apply.

(2) Physical Standards. Current *NEMA Standards Publication*, Section 14 shall apply and are supplemented as follows:

(a) Dimensions. The dimensions of the controller unit enclosure shall conform to the following maximum limits:

Height = 10 inches Width = 16 inches Depth = 9 inches

(b) Design. The controller unit shall be of modular design. The chassis shall be metal and shall be designed for easy access during maintenance, allowing for ease of testing without requiring disassembly or extender boards. Each unit shall operate a minimum of sixteen phases.

All fuses, connectors and controls shall be accessible from the front of the controller unit.

(c) Printed Circuit Assemblies. Parts identification shall be etched or silkscreened on circuit boards.

(d) Memory. To insure the accuracy for traffic control parameters, even during power outages, Electronically Erasable Programmable Read Only Memory (EEPROM) technology shall be used to retain all timing and control parameters. No batteries shall be required for retention of traffic parameters. Event logging and Time Base clock functions shall utilize battery supported Random Access Memory (RAM) memory for support of those functions.

(3) Interface Standards. The controller unit shall provide an input-output interface to meet the following requirements.

(a) RS-232C Interface. An RS-232C 25 pin interface and connector shall be provided for interconnecting to a printer, another like controller unit, a local personal computer, or a remote personal computer through an external phone modem.

(i) Unit to Printer. It shall be possible to transmit American Standard Code for Information Interchange (ASCII) coded information (data, letters, headings, etc.) to an 80-column or larger printer. The printer must be RS-232C compatible, be able to receive ASCII coded serial data at 1200 baud, 8 data bits, odd parity and utilize X-ON/X-OFF protocol.

The controller unit timing and operational data shall be individually transmitted to the printer. The printout shall be in a format easily understood by a person familiar with traffic engineering terminology. The unit to printer transmissions shall not interrupt normal operation.

(ii) Unit to Unit. The controller unit timing and operational data shall be individually transmitted to/from another like controller unit. The unit to unit transmissions will not interrupt normal controller unit operation except when Ring Structure data is changed. When the received Ring Structure data is different from that running, the receiving unit shall automatically revert to the Start Flash interval. The receiving unit shall time the Start Flash time and resume normal operation in the programmed Initialization interval. All cables needed for this transfer shall be included in this bid.

(iii) Unit to Personal Computer (PC). The controller unit timing and operational data shall be individually transmitted to/from a personal computer running the appropriate software. The transmissions shall not interrupt normal controller unit

operation except when Unit Structure data is changed. When the received Unit Structure data is different from that running, the receiving unit shall automatically revert to the Start Flash interval. The receiving unit shall time the Start Flash time and resume normal operation in the programmed Initialization interval.

The controller unit active status (Traffic Timers, Coord Timers, Preempt Timers, and Time Base Current) shall be individually transmitted to the PC running the appropriate software.

The controller unit report logs shall be individually transmitted to the PC running the appropriate software.

(b) Communications Interface. Provision for a separate 37 pin communications port "D", shall be made for purposes of using the controller in a system's environment. In the event the controller is used as a `system controller', no changes to the controller shall be allowed. An internal communications module (modem board) shall be in each unit.

(c) Keyboard.

(i) Programming. Programming of controller unit variables shall be via a front panel keyboard and display. For ease of front panel programming the controller shall utilize English language menus.

The controller unit shall prevent the alteration of keyboard set unit variables prior to the user having entered a specific code. This "Access" code shall also be user programmable via the keyboard.

All variables shall be displayed for visual verification concurrent with entry.

(ii) Programming Security. The controller unit shall maintain user programmable variables in non-volatile memory to assure continued safe and efficient controller unit operation in the event of power loss.

(iii) Backup Programming. The controller unit shall contain a reserve data base of controller unit variables stored in Programmable Read Only Memory (PROM). It shall be possible for the operator to activate the reserve data base by loading it into memory through a simple procedure utilizing front panel controls only.

(d) Display. The controller unit shall utilize a liquid crystal display (LCD), with back lighting, providing multi-segment alpha/numeric characters for displaying programming information and controller timing. The display shall be clearly readable in ambient light including the cabinet light or full sunlight from a distance of 4 feet at a 45 degree angle, 4 line, minimum, by 40 character display. The characters shall be a minimum of 0.24 inches high.

The display shall have two modes of operation. The first mode shall be a dynamic mode; it shall show the current timing interval and the time remaining in that interval. The second mode shall be a program mode, it shall show the interval and time/data programmed and/or being programmed.

(i) Concurrent Real Time Displays. The controller shall display a dynamic current real time status of six active timers and status per ring for two rings simultaneously. Concurrent real time displays shall be provided for ring timer status, coordination, telemetry, preemption, detectors, intersection status,

communications, connector input and output status, and time based coordination (TBC). As a minimum, the real time displays shall provide concurrent active status for the following conditions:

Ring timer status for sixteen phases for two rings, minimum green, added initial, walk, ped clear, time before reduction, cars before reduction, time to reduce, effective gap in effect, MAX one or two, passage time, gap out, max. out, force off, last car passage, walk hold or rest, green rest, yellow clearance, red clearance, red rest and red revert state. Phase status indicators for 16 phases concurrently displayed with the ring status indicators shall be phase on or rest, vehicle call, non-actuated vehicle recall, minimum vehicle recall, maximum vehicle recall, soft vehicle recall, pedestrian call, pedestrian non-actuated recall, pedestrian recall, phase hold, omit and pedestrian omit. Additionally, the program and pattern in effect, cycle countdown, preemption program in effect, and stop time in effect shall also be concurrently displayed. In addition, vehicle and detector calls may be placed through front panel entry while in the active ring timer display.

Coordination active timers shall simultaneously display, for up to four rings, the active phase(s) and/or force off active, current cycle length in seconds, offset in seconds, correction mode in effect, local cycle countdown, system cycle count up, offset in last cycle zero, correction of current cycle, time base interconnect, system, backup, manual control, or standby in effect or control.

The telemetry status shall simultaneously display the on line-off line status, active or non active carrier frequency, receiving or transmitting data and the validity of data received and/or transmitted for two ports.

The preemption status shall concurrently display the real time status of a minimum of 6 preemptions for preemption in control, preemption call (preemption or low priority call), timing of (ped or min. green, ped or vehicle clearance, track greens and clearance, dwell green), delay before preemption and duration of preemption.

The detector status display shall simultaneously indicate the current status of up to 16 detectors. It shall indicate the status of both special and phase detectors and whether they are on line or failed. The display shall indicate, as a minimum, whether the failure was due to max presence, no activity or erratic count.

The intersection display shall simultaneously indicate the active status of 16 phases and the red, yellow, green, walk, don't walk and overlap status of each phase and whether the vehicle and/or pedestrian detectors have a call or recall. Vehicle and pedestrian calls may be placed through front panel entry while in the active intersection display.

The TBC shall simultaneously display the current month, day, year, time (hour, minute, second) and whether it is standard or daylight savings time; the day and week program in effect, the dial, split, and offset in effect, phase function mapping for 16 phases, 8 phase functions, the status of 3 auxiliary and diagnostic outputs, and the status of the dimming function. It shall be possible to enable the auxiliary, special functions, and phase function options through front panel entry while in the TBC active status display.

(4) Actuated Control. Current *NEMA Standards Publication*, Section 14 shall apply and are supplemented as follows:

(a) Per Phase. The controller unit shall provide the following functional capability on a per phase basis:

(i) Conditional Service. Conditional service shall provide an optional method for phase selection. If two concurrent phases are timing and a call exists on the other side of the barrier and one of the phases is prepared to terminate due to gap out or max time out, the ring containing the timed out phase shall revert to a preceding vehicle phase if:

- A call exists on a preceding actuated vehicle phase. (Non-Actuated Phases shall not be conditionally reserviced)

- The gaped/maxed phase is programmed for conditional service.

- There is sufficient time remaining before max time of the other phase has elapsed.

The criterion for determining if sufficient time remains for conditional servicing is that the gaped phase vehicle clearance times plus the minimum green time of the phase about to be conditionally serviced be less than the time remaining on the max timer of the nongaped/maxed phase.

Conditional Service shall apply to vehicle phases only. For phases with concurrent pedestrian service, the pedestrian display shall remain Don't Walk. Any ped calls placed prior to reservice or during the reservice shall be stored until the phase is serviced normally.

If a conditionally serviced phase has been reserviced, the ring containing that phase shall remain in the conditionally serviced phase until the complementary ring's phase has gaped out or reached its max time and the conditionally serviced phase's minimum green time has been completed. The timed phases then cross the barrier together. If all calls on the opposite side of the barrier are removed during the conditional service operation, the controller shall revert to its normal phase sequence operation.

The Gap Timer of the conditional serviced phase shall not extend the green time of that phase when it is being conditionally serviced.

(ii) Special Detector Functions. The following special vehicle detector functions shall be provided:

- Delay. The phase vehicle detector actuation (input recognition) shall be capable of being delayed, by an adjustable (00 - 99 seconds), when the phase is not green. Once the actuation has been present for the delay time it shall be continued for as long as it is present.

- Extension. The phase vehicle detector actuation (input duration) shall be capable of being extended from the point of termination by an adjustable time (0 - 9.9 seconds).

- Switch. The phase vehicle detector actuation shall be capable of being switched to another phase when the programmed phase is Yellow or Red and the entered phase is Green. Detector Switching shall provide a per phase entry (phase number) identifying the phase that will receive the

switched actuations. The special vehicle detector functions shall be capable of being used in any combination. The sequence is that an actuation shall be stretched first, delayed second, and then switched.

• Detector Control. There shall be 64 vehicle detector assignments, 8 pedestrian detectors, and 8 special detectors. Each detector shall be programmable for a standard vehicle detector input, pedestrian detector input, one call, stop bar A or stop bar B, Adaptive Protected Permissive Left Turn, Adaptive Protected Permissive Thru, and an AND code that only allows a call to be entered if calls are active on all detectors so programmed.

The Adaptive Protected/Permissive operation measures the volume of turn vehicle traffic and available gap windows in the opposing through vehicle traffic to determine whether the turn should operate protected or permissive.

(iii) Extended Pedestrian Clearance. The controller unit design shall provide an alternate mode of operation for the Pedestrian `Don't Walk' Output to extend the flashing period (Ped Clearance) for each phase so programmed, so a portion (equal to the sum of the Yellow Change and Red Clearance time settings) may appear concurrently with the vehicle change intervals.

The end of the Ped Clear (flashing period) shall occur earlier than the end of the vehicle clearance intervals when 1) Min Grn + Yel + Red is greater than Walk + Ped Clear, 2) The phase is extended, and/or 3) Ped Clear is less than Yel + Red.

When the Extended Ped Clear (flashing period) occurs concurrent with the vehicle Yellow Change and Red Clearance display, the red timing shall not be omitted if the Omit Red Clearance input becomes active.

(iv) Actuated Rest in Walk. The controller unit design shall provide an alternate mode pedestrian dwell for actuated phases. The actuated phase shall rest in Walk when so programmed and there is no serviceable conflicting call at the end of the Walk timing.

(v) Automatic Pedestrian Clearance. The controller unit design shall provide an alternate mode of operation to enable the controller unit timing of the pedestrian clearance interval when Manual Control Enable is active. When programmed, this feature will prevent the pedestrian clearance interval being terminated by the interval advance input.

(vi) Last Car Passage. Last Car Passage provides an alternate method of operation to control green termination with Volume Density operation.

When Last Car Passage is active, each phase operating in a Volume Density mode shall retain the right of way for the unexpired portion of the Passage time following a decision to terminate the green due to a reduced gap. This provides a full passage time for the last vehicle which crossed the detector prior to the decision to terminate the green.

(b) Per Unit. The controller unit shall provide the following functional capability on a per unit basis:

(i) Simultaneous Gap Out. Green timing termination in multiple ring controller configurations shall provide for simultaneous termination.

Simultaneous Termination, when timing phases concurrently with the next serviceable call on a phase that conflicts with more than one of the phases timing (about to cross a barrier), insures that all phases which will terminate must simultaneously reach a point of being committed to terminate before green timing termination shall begin (i.e., Gap-Out, Max-Out and/or Force-Off).

(ii) Dual Entry. Dual entry is a mode of operation (in multiple ring controller units) in which one phase in each ring must be in service, where possible subject to compatibility, at all times. If a call does not exist in a ring when it is committed to cross a barrier, a phase shall be selected in that ring to be activated by the controller unit based on this programming.

(iii) Variable Sequence. The controller unit shall provide the capability to define 16 phases plus an exclusive pedestrian into a structure of up to four rings.

The design shall allow the user to establish the basic ring structure for the controller unit. The definition of the structure shall be accomplished by the entry of Ring, Next Phase and Concurrent Phases for each phase, and vehicle and pedestrian channel outputs for each phase.

- Ring. Each phase must be assigned to a ring to be serviced.

- Next Phase. Each phase must have a Next Phase. When the phase is the only one in the ring, it will be entered as next to itself.

- Concurrent Phases. Each phase that is required to run concurrent with another phase(s) shall have the concurrent phase(s) defined.

- Vehicle and Pedestrian Channel. Each phase vehicle and pedestrian driver shall be programmed to none, one, or more channels.

- Signal Driver Outputs. It shall be possible to assign the Channel Outputs to hardware pins for the TS1 controller. (The signal driver group to channel assignments has been programmed in the Overlap Standard and Ring Structure.)

The structure shall require that any phase which will not have concurrent phases must be in Ring 1, therefore the Exclusive Pedestrian shall be in Ring 1. The sequence in a ring shall start with the lowest numbered phase to be used.

(iv) Alternate Sequences. The controller unit shall provide the capability of 15 alternates to the standard sequence. The alternates shall be phases (Phase Pair) being serviced in reverse order. The phase pair must be adjacent in the normal sequence, may not be separated by barriers, and a single phase may appear only in one of the phase pair definitions for a single alternate. The 16 sequences offer every combination of lead-lag on an 8 phase dual ring application.

The alternate sequences may also be selected by the Alternate Sequence external interface inputs or the coordinator as a function of the pattern (Dial/Split/Offset) in effect.

(c) Priority of Input Functions. The priority of input functions shall be in the following order:

(i) Power-Up
(ii) External Start
(iii) Phase Omit
(iv) Pedestrian Omit
(v) Interval Advance
(vi) Stop Time
(vii) Remote Flash
(viii) Manual Control Enable
(ix) Ring Force Off
(x) Phase Hold
(xi) Pedestrian Recycle

Lower priority inputs shall condition those of higher priority as defined elsewhere in this standard.

(d) Indications. The controller unit shall provide for the simultaneous (i.e., concurrent) display where concurrent states exist of the following states/functions:

(i) Per Phase Status for: Phase On, Phase Next, Phase Vehicle Call, and Phase Pedestrian Call.

(ii) Per Ring Status For: Walk, Ped Clear, Min Green, Passage, Gap Out, Max Out, Force Off, Green Dwell, Yellow, Red Clear, and Red Rest.

(iii) Additionally, the controller unit shall provide for the simultaneous (i.e., concurrent) display, where concurrent states exist of the following states/functions:

Per Phase Status for:	Vehicle Recall & Pedestrian Recall
Per Ring Status For:	Added Initial, Time Before Reduction, Time To Reduce, Max I & II, Green Dwell, Stop Time & Hold
Unit Status For:	Access & Watch Dog

(5) Coordination. Internal coordination shall be a special program operating within the controller unit. The coordinator shall accept Dial, Split, and Offset commands from traditional (pretimed) interconnect systems and/or from a companion Time Base program.

Sixteen different timing programs shall be selectable (one for each dial-split combination) with three offsets in each. Coordination parameters shall be entered through the controller unit keyboard or transferred from another device. Coordinator settings and activity may be monitored on the controller unit display (i.e., hold and Force Off indication shall denote when these functions are used). There shall be six different methods of control strategies for coordination. Each of the strategies shall be capable of being selected on a pattern basis. The six strategies shall be: Yield, Permissive, Permissive Yield, Permissive Omit, Sequential Omit, and Full Actuated Control.

Coordination controls are internally applied (Hold, Omit, Force Ring 1, etc.) while the controller unit inputs for these same functions shall remain active and may impact coordinator operation.

The internal coordinator shall provide techniques to guarantee that all unused time from the non-coord phase(s) in the background cycle shall be reallocated to the coord

phase(s), extend the coord phase, or allocate time to the non-coord phases, depending upon the control strategy selected.

The coordinator shall provide for a controlled release (permissive period) to each of the non-coord phases in sequence. When a call is not present for the phase to be serviced next in sequence, the coordinator shall re-allocate that phase's time to the end of the coord phase. The time allocated to any actuated phase shall never exceed that programmed regardless of when it may appear in the background cycle because some other phase gaped out earlier than the limit set in the program.

Prior to the completion of the coord phase time and the beginning of the first permissive period, the coord phase pedestrian shall display the ped clear indication and dwell don't walk. This shall eliminate the need to provide ample time in each subsequent phase time for the coord phase ped clear. The coord phase pedestrian shall dwell don't walk until such time as the coord phase terminates and returns to green or the last permissive period in the cycle is complete without the coord phase terminating.

The user shall enter the coord phase(s), the phase times and offsets. All timings shall be in seconds so there shall be no conversion from seconds to percent and vice versa. The cycle length, yield points, permissive periods and force off points shall be calculated internally.

When a strategy for coord phase extension is selected, the programmed cycle length must be greater than the calculated cycle length.

(a) Coord Adaptive Split. When coord adaptive split is selected, the running pattern shall automatically seek the most advantageous split possible for all non-coordinated phases. If a phase is forced, it is a candidate for an increase in its split. If a phase is gapped out, it is a candidate for a decrease in its split. Time will never be subtracted from a phase split except to give it to another phase. Time will only be added to a phase split if such addition does not cause the cycle length to change.

(b) Programs. The coordinator shall provide control for 16 programs. The Coordinator selects the program to be used, according to the current status of the Dial and Split requests. The cycle time of each program shall be equal to the sum of the phase times of the longest path between barriers in all rings in the controller.

(c) Offsets. The coordinator shall provide 3 offset settings for each of the 16 programs. The values shall determine the time in seconds that the starting point of the coordinated phase GREEN (local time zero) shall lag the synchronization (sync) pulse (system time zero).

The offset value shall be adjustable in length from 0 to 999 seconds. The only restriction shall be that the value must be less than the cycle time for the respective Dial/Split program.

The coordinator shall have three methods of changing the actual offset. Regardless of the method selected for offset correction, the Coordinator shall recognize when the master sync and offset in control indicate local zero is not correct but the coord phase(s) are on and waiting for local zero to begin the next cycle. The coordinator shall utilize this extra time to change the actual offset by resetting the local cycle to zero. This type of correction may only take place if the controller has returned to the coordinated phases early due to a phase or phases not requiring any or all of the phase time programmed.

(i) Shortway/Smooth Transition. When changing the offset by shortway, the coordinator shall establish a new offset by the shortest route possible. This movement shall never be over 50 percent of the cycle length and shall be accomplished by adding or subtracting to/from the program phase times in a manner to limit cycle change to a maximum of 18.75 percent.

When adding time to change the actual offset, the time shall be added to the coord phase(s). When subtracting time to change the actual offset, the time shall be subtracted from the non-coord phases when possible (subject to the available time in the non-coord phase i.e., program phase time versus phase minimum time). The time subtracted shall be the maximum possible on a phase by phase and cycle by cycle basis within the 18.75 percent limitation.

When the shortest route to the correct offset requires subtracting time and the program/minimum phase time differential would preclude correction within five cycles, the routine changes that offset by adding time.

When the shortest route to correct offset requires subtracting time and the program/minimum phase time differential would preclude correction within five cycles, the routine changes the offset by adding time.

(ii) Shortway Transition Add only. This is the same as (a) in that it will ONLY add time.

(iii) Infinite Dwell Transition. When changing offset by dwell (infinite) the coordinator shall establish a new offset by dwelling in the coord phase(s) green.

Infinite Dwell Transition contains provisions to operate in applications where the master contains an offset interrupter. An Offset Interrupter is a device which imposes a number of shifting interrupter pulses onto the interconnect line containing the real sync pulses for the purpose of smoothing the offset correction over several cycles. The maximum time the coordinator shall dwell will be determined by the last sync separation.

(iv) Dwell With Interrupt Transition. When changing offset by dwell with interrupt, the coordinator shall establish a new offset by dwelling in the coord phase(s) green. The maximum time the coordinator can dwell shall be adjustable from one to 999 seconds. After the dwell, the coordinator shall release and begin timing program phase times. The dwelling operation shall be repeated until the desired offset is reached. Only one dwell interval shall be timed between sync pulses.

(d) Transition Cycles. The coordinator shall provide a smooth and orderly transition from Free to Coordinated and Program to Program.

(i) Free To Coordinated. The Free to Coordinated smooth and orderly transition shall be accomplished by enabling partial coord operation only after the offset has been determined to be valid (active for 15 seconds in the case of interconnect control, otherwise immediately). Once this condition is met, the coordinator shall transfer the coord phase(s) to non-actuated. At the beginning of any coord phase(s) green, complete coord control shall commence and normal offset correction shall sync the controller to the system reference after the completion of the first cycle under full coord control.

(ii) Program To Program. The Program To Program smooth and orderly transition shall be accomplished by allowing a program change to occur only at local zero time. Program transitions which include a change in coord phase(s) shall transfer the new coord phases(s) to non-actuated, allow a free mode service until a coord phase is green. At the beginning of any coord phase green, complete coord control shall commence and normal offset correction shall sync the controller to the system reference after the completion of the first cycle under full coord control.

(e) Phase Times. The coordinator shall provide an adjustable time for each phase for each of the 16 programs. The phase time shall be adjustable from 1 to 99 seconds. For the coord phase(s) this shall become the minimum phase time and for the actuated phases it shall become the maximum phase times. Green time for a phase is the phase time minus the phase vehicle clearance (yellow and red) times. The phase time begins when the respective phase is ON except for the coord phase(s) whose phase times may not begin until the local time zero.

(f) Phase Modes.

(i) Coord Phase(s). The coordinator shall provide for selecting in each of the 16 programs which phase(s) is/are to be the coord phase(s). The coord phase(s) shall operate as non-actuated when coordinated. When no phases have been selected as the coord phases(s), the controller shall run Free. When operating in multiple ring controller configurations, a phase in each ring must be selected as the coord phase unless compatibility does not exist within that ring to the coord phase in Ring 1.

(ii) Dual Coord Phase(s). The coordinator shall provide for selecting in each of the 16 timing programs secondary coord phase(s) in each ring. The secondary coord phases shall operate as non-actuated when coordinated.

The secondary coord phases shall maintain a fixed position in the pattern cycle in relationship to the coord phase. It may begin early but shall not terminate later than the allocated times would imply.

(iii) Actuated Phase(s). The coordinator shall provide for operation modifiers to be selected for each actuated phases in each of the 16 timing programs. The five modifiers shall be:

- Minimum Vehicle Recall.
- Maximum Vehicle Recall.
- Pedestrian Recall.
- Maximum Vehicle Recall and Pedestrian Recall.
- Phase Omit.

(g) Alternate Sequences. The coordinator shall provide a means to select one of the alternate sequences or the standard sequence as a function of the pattern (Dial/Split/Offset) in effect.

When the coordinator is running a pattern, the external interface inputs shall not override the pattern sequence.

(h) Permissive Periods. The coordinator shall provide two types of permissive periods. The permissive period shall control the time period during which the

coordinator releases the coord phase(s), allowing the controller unit to begin servicing calls on the non-coord phases.

The first type of permissive operation shall consist of a standard vehicle permissive. The length of the period shall be determined by the phase time and the minimum time (minimum time = Minimum Green or Maximum Initial + Vehicle Yellow and Red Clear).

Minimum time shall be based on the longer of Minimum Green or Maximum Initial when the Seconds/Actuation setting is greater than zero, otherwise minimum time shall be based on Minimum Green. The minimum time shall be internally set to five seconds in cases where the timings are programmed for less.

The second type of permissive operation shall consist of a separate pedestrian permissive concurrent with the vehicle permissive. The length of this period shall be determined by the phase time and Walk + Ped Clear + Phase Yellow + Red Clear.

In no case will the pedestrian permissive period be longer than the vehicle permissive period. When a phase is selected as next during the pedestrian permissive period, the pedestrian movement may start with the beginning of the associated vehicle movement (phase green) regardless of when the pedestrian call is received.

When the controller unit yields during any permissive period, the coordinator shall allow the controller unit to service all the subsequent phase(s) in normal order before returning to the coord phase(s) and it shall not yield on subsequent permissive periods in the same cycle.

(i) Sync Monitor. The coordinator shall monitor the Offset command request for validity of the imposed sync reference.

The coordinator shall discontinue offset correction when the length of time between sync pulses exceed the cycle in effect by five seconds and until the next sync pulse is received.

The coordinator shall cause the controller unit to revert to Free mode when:

(i) No sync pulse is received for 3 consecutive cycles.
(ii) No offset line is active for 15 seconds.
(iii) More than 1 offset line is active for 15 seconds.

The Sync Monitor "Free" mode may be replaced by a TBC event. See the "On-Line" definition in the Time Base section.

(j) Manual Control. The coordinator shall be capable of being set to manually operate in any pattern (Dial/Split/Offset) by an entry through the front panel. A manual selection of pattern overrides the pattern interface commands.

A manual sync of the pattern shall be controlled by an entry through the front panel.

(k) Free. The coordinator shall be capable of Free mode of operation. During this mode all coordinator control of the controller unit operation shall be removed.

The coordinator shall be capable of being set to the Free mode defined under Sync Monitor and by an entry through the front panel.

The coordinator shall recognize input requests that conflict with the internal coordination operation and automatically revert to Free mode when the inputs are active. The inputs that conflict with internal coordination are:

(i) Manual Control Enable .....Free
(ii) Stop Time (Either Ring) .....Free
(iii) Remote Flash .....Free
(iv) Preemption (Any).....Free

(l) Master Line Drivers. Eight outputs for master type interconnect interface drivers shall be available. The master line driver outputs echo the active program. All outputs shall be constantly "on" when active except offset which is "off" for three seconds once each cycle beginning at the zero point of the cycle.

(6) Preemption. Internal Preemption shall be a special program operating within the controller unit. The preemption program shall accept commands from six high priority preempt inputs and six low priority inputs.

The preemption shall be capable of cycling while in dwell. It shall be capable of being linked to another preempt. It shall provide for two modes of priority inputs, one for preempt (railroad, emergency vehicle) and one for low priority (bus or transit vehicles).

Preemption sequences shall be programmable, as a minimum, for minimum green/walk, delay and duration, lock/non-lock memory, dwell, selective ped clearance, selective yellow, selective red, track green, track ped clear, track yellow, tract red, return ped clear, return yellow, return red, exit phases, flash override, lockout, exit calls and max recalls.

(7) Time Base Coordination. The internal Time Base Control shall be a special program operating within the controller unit. A minimum of 180 different Time Base Control events shall be capable of being programmed over a 99 year time frame on a Time-Of-Day, Day-Of-Week, and Month Day-Of-Year basis.

Time Base Control events shall be entered through the controller unit front panel or transferred from another like controller unit. Time Base Control settings and activity shall be monitored on the controller unit display.

The Time Base Control program shall output dial, split and offset commands to the coordination program. It shall be possible to perform functions not necessarily traffic related within the Time Base Control program by programming and using the three auxiliary outputs.

(a) Clock Calendar. The Time Base Control shall be provided with a line frequency driven clock and backed up by a battery supported crystal controlled clock. During normal operation, the line frequency driven clock shall control all timings and resync the crystal controlled clock to the line frequency clock once per minute. When power is removed and reapplied, the crystal controlled clock shall provide the current time to the line frequency clock.

The Time Base Control shall provide a 99 year calendar for automatically determining the current day of week, day of month, month of year and year based on the data set as a starting point. The calendar shall provide automatic compensation for leap years.

(b) Memory and Clock Backup. A battery backup voltage source shall be provided with the TBC circuitry. In the battery backup mode time shall be maintained to within +/- 0.005 percent as compared to the National Institute of Standards and Technology (NIST) time standard (WNV radio station call letters).

The TBC circuitry, if a separate board, shall be capable of being removed from the controller unit without loss of time or event data. Circuitry shall be provided to monitor the battery voltage and provide an indication when insufficient voltage is available to maintain the clock and RAM data in event of a power failure.

(c) Daylight Savings Time. The Time Base Control shall provide for Daylight Savings Time to be programmed to occur automatically as defined by law in Michigan, to occur automatically at any user selected date, or not to occur.

When programmed to occur automatically as defined by law in Michigan, time shall advance one hour on the first Sunday in April at 02:00:00 a.m. and decrement one hour on the last Sunday in October at 02:00:00 a.m.

When programmed to occur automatically at a user selected date, time shall advance one hour on the date programmed at 02:00:00 a.m. and decrement one hour on the date programmed at 02:00:00 a.m.

Daylight Savings Time shall only be capable of being implemented once per year.

(d) Program Day. A program day shall be the list of traffic and/or auxiliary events to occur in a 24-hour period. The Time Base Control program shall provide for 99 program days to be defined.

It shall be possible to equate program days which may require the same event listing to effectively multiply the event capacity.

It shall be possible to copy an entire program day event listing to another program day to establish a data base for editing to create a similar but different program day event listing.

(e) Special Days. The exceptions to the normal day-of-week event listings shall utilize Time-Of-Year Special program days. Time-Of-Year Special program days 01 through 49 shall be utilized for special day programs which occur on the same date (month and month day) every year. Program days 50 through 99 shall be utilized for special days which occur on one date (year, month, and month day).

(f) Alternate Week. The Time Base events shall be implemented from a weekly schedule of program days on a day-of-week (except for special days) basis.

The normal day-of-week (Sunday through Saturday) event listing shall utilize program days 01 through 07 with Sunday being program day 01.

The Time-Of-Year event structure shall provide a means of substituting two alternate weekly schedules for the normal weekly schedule.

(g) Event Capacity. A minimum of 180 traffic and/or auxiliary events shall be capable of being programmed. A minimum of 180 special days shall be capable of being programmed. The capacity of either of the above may be inversely affected by the number of entries in any one.

(i) A traffic event shall consist of a coordination pattern (Dial #, Split #, and Offset #) or free mode, Phase Function Mapping and the time of occurrence (hour, minute, and program day).

(ii) An auxiliary event shall consist of the condition of three Auxiliary outputs, Dimming control, detector diagnostics, special function outputs, and the time of occurrence (hour, minute, and program day).

(iii) A time-of-year event shall consist of a special day or alternate week plus date of occurrence (year, month, and month day).

(h) Traffic Programs. In addition to dial, split and offset commands, the Time Base Control program shall provide the following as traffic events:

(i) Flashing (Voltage Monitor inactive).
(ii) Free.
(iii) Phase Function Mapping by phase for 16 phases.

Phase function mapping shall include: Max 2, phase omit, pedestrian omit, minimum vehicle recall, max vehicle recall, pedestrian recall, detector switching omit, detector switching now, detector switching also (switch and assigned detector input simultaneously) and overlap omits.

Phase Function Mapping features are Free Mode modifiers and shall not be part of an event which selects a pattern (Dial/Split/Offset) or Flash.

(i) Auxiliary Events. There shall be three auxiliary outputs available. Each output shall be non-cyclic, each totally independent of any other output. The outputs shall not be affected by any other input including the On-Line input. The auxiliary outputs may begin and/or end concurrently with another program.

There shall be three detector functions available. One shall set the value of the detector diagnostic to be selected (two parameters can be set for each detector) and one to initiate or stop the detector log report. The third function is reserved for future use.

There shall be a dimming function that allows signals so programmed to dim their outputs.

There shall be eight special function mapping outputs available. There shall be eight special functions, three alternate passage and maximum times, three adaptive maximum settings, an Adaptive Protected/Permissive feature, an In Cycle Flashing Red feature, four sign control outputs, three diamond intersection control outputs, four queuing controls, and coord adaptive split.

It shall be possible to map more than one function to the same logical control.

(j) Input and Program Priorities. The coordination programs shall be capable of being selected based on manual (keyboard) inputs, Time Base Control events and interconnect inputs. Program select priority shall be:

(i) Manual Inputs.
(ii) System Interface.
(iii) TBC Events.
(iv) Interconnect Inputs.

When the TBC On-Line input is active, the TBC events have no priority and program selection shall be based on manual inputs or interconnect inputs.

When the On-Line input is active, the coordination routine reverts to TBC control based on sync monitor failure.

(8) Miscellaneous.

(a) Flash.

(i) Start-Up Flash. The controller unit shall have provisions whereby an adjustable timed period/state (Start-Up Flash) shall occur prior to the Initialization routine.

The time range for Start-Up Flash shall be 0 to 99 seconds in increments of 1 second.

When power is restored following a defined power interruption or Watchdog restart, the Start-Up Flash state shall become operational. No input, other than alternating current (AC) Power, shall prevent this state from the completion and/or exit to the Initialization routine.

(ii) Automatic Flash. Activation of this input shall cause vehicle and pedestrian calls to be placed on all phases. The controller unit shall assure the completion of the Minimum Green or Walk plus Red Clearance time on the current phase(s) and shall proceed immediately, thereafter, to the vehicle clearance intervals followed by the phase(s) programmed as the Entry Phase(s).

After the Entry Phase(s) Minimum Green or Walk plus Red Clearance, the controller unit shall proceed to the vehicle clearance intervals.

Upon completion of the vehicle RED CLEARANCE interval, the controller unit shall initiate flashing operation (Voltage Monitor output inactive). The controller unit shall maintain this condition, Voltage Monitor inactive and Red Dwell as long as the Test A (Remote Flash) input is active. When the input becomes inactive, the controller unit shall move immediately to the beginning of the phase(s) programmed as the Exit Phase(s), with a Green/Walk display, calls on all phase vehicle and pedestrian, and shall cease flashing operation (Voltage Monitor output active).

(b) Dimming. The controller unit shall be programmed to provide output dimming based on a Time Base Auxiliary Event or an interface input.

The dimming function within the controller unit shall be accomplished by controlling the load switch driver outputs with respect to the AC line voltage. The programmed outputs, when "ON", will be turned "OFF" in alternate half cycles of the AC line.

The user control shall be by selection of which load switch driver will have a "Dimmed" output (phase by phase by output).

When the controller is used in a cabinet that employs Absence of Red Monitoring (current *NEMA Standards Publication* Monitor function), the user may be required to make a choice between:

(i) Absence of Red Monitoring.
(ii) Dimming the Red Display.

(c) Diagnostics. The controller unit shall be provided with a resident series of diagnostic capabilities describing its own internal state. It shall not require internal access or changes to the controller unit to initiate diagnostic programs.

(i) Automatic Diagnostics. The controller unit shall perform diagnostics enabling operator verification of proper operation.

The "automatic" diagnostics shall be performed without an operator request. The diagnostics evaluation shall be displayed on the controller unit front panel display.

- Processor Monitor. The controller unit shall contain provisions to monitor the operation of the microprocessor. The monitor shall receive signals, at least, once every 100 milliseconds from the microprocessor.

  When the signal is not received for 200 milliseconds +/-20 percent, the processor monitor shall initiate flashing operation (Voltage Monitor output inactive). When flashing is initiated as a result of the processor monitor, it shall illuminate a front panel indication labeled "Watchdog". The monitor shall be deactivated when there is a power failure and become active when restored.

  The monitor shall attempt an automatic restart of the microprocessor to the power up Start Flash timing condition. The controller unit shall operate as though power had been removed long enough for a full restart and reapplied. The front panel Watchdog indicator shall remain illuminated until the controller unit front panel has been manually addressed.

(ii) Operator Initiated Diagnostics. The controller unit shall perform diagnostics enabling operator verification of properly operating inputs, outputs, keyboard and display.

The "operator initiated" diagnostics shall be performed only after an operator request through the controller unit front panel. The technique used shall be relatively simple. It shall suspend normal traffic operation during the test and the controller unit shall be plugged into Suitcase-Sized *NEMA Standards* Controller Test Set. The diagnostics evaluation shall be displayed on the controller unit front panel display and/or indicators on the suitcase tester as an operator interface.

- Inputs. The controller unit shall provide test routines to enable operator verification that input functions are proper. This test shall determine whether the input buffers are operating correctly. Each output shall be actuated in a fixed sequence. The user shall observe the front panel display and determine correct operation.

- Outputs. The controller unit shall provide test routines to enable operator verification that output functions are proper. This test shall determine whether the output drivers are operating correctly.

Each output shall be actuated in a fixed sequence. The user shall observe the output sequence and determine correct operation.

• Display. The controller unit shall provide test routines to enable operator verification that display functions are proper. This test shall determine whether front panel drivers and decoders are operating properly. All the indicators shall be activated. The user shall observe the front panel display and determine correct operation.

• Keyboard. The controller unit shall provide test routines to enable operator verification that keyboard functions are proper. This test shall determine whether the keyboard is operating correctly. The operator shall test each of the controller unit keys. The numeric display shall indicate the key pressed. The user shall observe the front panel display and determine correct operation.

(9) TRAFFIC ANALYSIS FUNCTIONS. The following desired capabilities shall be optional; however, provision of such will be cause for preferential consideration for award. Refer to Specification Compliance Section for bidder submittal requirements.

(a) Alarm Monitoring/Events Logging. The controller shall monitor and log the status of the following functions for subsequent uploading to an on-street or central office master:

Cycle Fault	Voltage Monitor	Preempt
Coord Fault	Conflict Flash	Local Free
Coord Failure	Local Flash	Special Status
Cycle Failure	Remote Flash	Power On/Off

A Local Alarms Report shall be generated with the capacity for up to 120 alarm events, including date and time of occurrence. Once logged, the alarms shall remain until the report capacity is exceeded at which time the oldest alarm shall be deleted and the new one added. This report shall be output to the front panel display, to the printer port, and to the 25 pin RS 232 port.

(b) System Detectors.

(i) Detector Data. The controller shall have the ability to receive input data from up to eight special (system) detectors in addition to the normal actuated controller unit phase detectors as `system detectors.'

The controller shall process all system detector's data, consisting of volume and occupancy, and shall be capable of transmitting the results of this processing to either the on-street or central office master monitor. As a minimum the following parameters shall be determined:

Raw volume count, raw occupancy
Average occupancy percent
Average volume percent
Volume + occupancy percent

(ii) Detector Report. The controller shall generate a System Detector Report based on an operator determined logging interval and sample period. The report shall include raw volume and occupancy along with averaged volume and occupancy percent for the sample period. This report shall have the capacity to store up to 96 sample periods. A sample period data set shall remain until the report capacity is exceeded at which time the oldest sample period data set will be replaced by the new data set.

In addition, the controller shall provide a volume count report. Means shall be provided to enable the use and vehicle, special or pedestrian detector inputs as count detector inputs for the volume count report. The detector volume count report shall have the capacity to store up to 72 count periods. Note: the detector volume count report parameters and output will not be capable of being entered or viewed via the front panel of the controller. It must be downloaded and viewed via a PC and the manufacturer's software.

(iii) Detector Diagnostics. Each detector, both phase and special system shall be tested by a diagnostics routine for conformance to specified parameters. The detector diagnostics shall monitor activity on each detector for constant calls, absence of calls, and erratic output. These parameters shall be user programmable.

A detector shall be classified as `on-line' when the results of the monitoring and diagnostic procedures determine that data from the detector is within the allowable range.

Detectors which have failed the diagnostics and those subsequently operating within diagnostic parameters shall be automatically logged in a Detector Failure Report, including date and time of occurrence. This report shall have the capacity to store up to 60 diagnostic events and the event shall remain until the report capacity is exceeded.

(c) Measures of Effectiveness (MOE's) shall be accumulated and reported to enable the evaluation of coordination pattern parameters based on actual data collected during the periods the pattern is in control. MOE calculations shall be made once each sequence cycle for Volume, Stops, Delay and utilization for each phase in the controller unit and then averaged over the duration of the pattern.

Volume shall represent the average number of actuations during the sequence cycle, for each phase, over the duration of the pattern.

The Stops measurement shall represent the average number of vehicles which must stop at an intersection during the cycle, for each phase, over the duration of the pattern.

Delay shall represent the average time, in seconds, that vehicles are stopped during the sequence cycle, for each phase, over the duration of the pattern.
The Utilization measurement shall represent the average seconds of green time used by each phase during the sequence cycle for the duration of the pattern.

A MOE Report shall be provided and shall have the capacity to store up to 24 patterns of MOE's. The pattern MOE's set shall remain until the report capacity is exceeded at which time the oldest pattern set shall be deleted and the new MOE pattern added.

(d) Speed Traps. The controller shall provide speed monitoring capability in the form of a Speed Trap function. The controller unit shall provide for up to 2 independent Speed Traps with operator selectable detector spacings of either 11 or 22 feet, dependent upon the application. Provision shall be made in the controller to monitor the speed in miles per hour (MPH) or kilometer per hour (KPH).

A nominal speed range shall be settable for each pattern, with the percent of vehicles higher, within and lower than this nominal speed ranged logged for reporting.

A Speed Report shall be provided and shall have the capacity to store up to 24 patterns of Speed data. The pattern Speed data shall remain until the report capacity is exceeded at which time the oldest pattern speed data shall be deleted and the new data added.

(e) Reports. In addition to the above-described reports, the controller shall provide a Comm Report which will allow the user to view a list of communications failures along with date and time of occurrence. This report shall have a minimum capacity of storing up to 60 events (faults). The fault event, including date and time of occurrence, shall remain until the report capacity is exceeded at which time the oldest fault shall be deleted and the new fault event added.

In regard to communications, indication shall be provided on the front panel of the controller unit to denote when a carrier signal is being received, valid data is being received and when the unit is transmitting.

(f) Communications. Each local intersection controller shall be provided with a system interface which allows the reception of Central Office Master and On Street Master commands and the transmission of local intersection data to the respective site. This must be compatible with existing systems now used by cities. The controller shall be capable of being programmed to operate from 1,200 baud to 57,600 baud.

(i) Modems. An internal modem shall be provided and shall have two-wire half duplex communications. This shall communicate with On Street Master.

A 1,200 - 57,600 baud external modem shall provide auto dial/auto answer to automatically answer calls from the Central-Office Master and to transmit stored data to the Central-Office Master via standard voice-grade, telephone lines.

D. Quality Provisions. The local controller unit shall successfully meet the *NEMA Standards Publication* requirements, as applicable. The controller unit shall have been tested and certified by an independent test laboratory. An `independent test laboratory' shall be defined as one that has no relationship to the controller manufacturer, except as a supplier of services.

E. Specification Compliance. The bidder is required to complete, sign and attach a Specification Compliance Sheet with respect to the equipment bid. Submittal of appropriate supporting documentation, manufacturer’s literature, etc. is encouraged.

2. **Traffic Control Cabinet.**

A. Scope. This section defines the minimum acceptable requirements for a series of cabinets that differ in size, to house traffic signal controller units and related devices.

B. Outline Dimensions. Outline dimensions shall be as shown in Table 1. All traffic control cabinet dimensions are in inches. These dimensions are outside dimensions exclusive of hinges, handles, overhang(s), vent housing, and adapters. Cabinet heights are measured to the lowest point of the top surface of the cabinet. The combined overhangs of the four sides of the cabinet shall not exceed four inches.

TABLE 1: MINIMUM OUTLINE DIMENSIONS

Size	Height	Width	Depth
4	51 inches	24 inches	16 inches
M30	51 inches	30 inches	16 inches
M36	51 inches	36 inches	16 inches
6	56 inches	44 inches	25.5 inches

C. Mountings.

(1) Pole Mounted (Size 4). Cabinets intended for side of pole mounting shall be provided with any necessary adapter, exclusive steel banding, to permit mounting to a 4½ inches or larger diameter pole. The adapter shall accommodate lag bolts up to ⅜ inch and steel banding up to1 inch wide. Mounting points shall be provided at or near the top and bottom of the cabinet. Cabinets shall be furnished without conduit holes.

(2) Pole Mounted/Base Mounted (M30). Cabinets intended for side of pole mounting shall be provided with any necessary adapter, exclusive steel banding, to permit mounting to a 4½ inch or larger diameter pole. The adapter shall accommodate lag bolts up to ⅜ inch and steel banding up to 1 inch wide. Mounting points shall be provided at or near the top and bottom of the cabinet. The adapter shall have provisions for two holes spaced horizontally, which will have a center - to - center distance of 3½ inches. Cabinets shall be furnished without conduit holes. In addition, the cabinet shall be provided with a removable bottom to enable it to be pole or base mounted.

(3) Base Mounted (M36). The M36 cabinet shall be constructed so that it can be mounted on a 32 inch deep by 40 inch wide foundation. Anchor bolt mounting provisions shall be dimensioned for two bolts on 12 - 3/16 inch center (front to back) on 18-inch centers (side to side).

(4) Base Mounted (Size 6). The size 6 cabinet shall be so constructed that it can be mounted on a 32 inch deep by 48 inch wide foundation. Anchor bolt mounting provisions for four bolts on 40¾ inch centers (side-to-side) on 18½ inch centers (front-to-back). One Base Adaptor that is 15 inches in height with the same dimensions and bolt pattern as the cabinet shall be included.

(5) Anchor Bolts. Anchor bolts for base mounted cabinets shall be ¾ inch diameter by 42 inches long which includes a 90 degree bend with a three inch leg. The end opposite the leg shall be threaded for at least three inches with a ¾ inch Unified Coarse Thread (UNC) -10 thread.

Anchor bolts shall be steel with a hot-dipped galvanized or zinc plate surface. Four anchor bolts, eight nuts, and eight washers shall be provided with each size 6 cabinet.

D. Materials. The traffic control cabinet shall be constructed of aluminum alloy. The aluminum material shall be a minimum of ⅛ inch alloy sheet, American Society for Testing and Materials (ASTM) No. 5052-H32 or equivalent.

E. Finish and Surface Preparation.

(1) Painted Cabinets.

(a) The surface of the cabinet shall be suitably prepared prior to painting, to avoid paint pealing.

(b) Interior surface shall be painted white.

(c) The exterior of the controller cabinet and all mounting attachments shall be finished with a durable and weather-resistant protective coating having a total dry film thickness of not less than 1.5 mils. The final coat shall be aluminum in color, shall give complete hiding, and shall be at least 0.75 mil in thickness.

(d) If the painted surface is scratched or damaged, the affected area shall be repainted.

F. Top Surface Construction. The cabinet shall be manufactured so as to prevent the accumulation of water on its top surface.

G. Doors.

(1) Main Cabinet Door. The cabinet shall have a main door which permits access to all equipment within the cabinet. Doors shall be hinged on the right side of the cabinet as viewed from the outside facing the cabinet door opening. They shall have a handle made of one piece construction and swing away from the locking mechanism.

(2) Hinges. All cabinet doors shall incorporate a piano type hinge utilizing stainless steel hinge pins.

(3) Door Stop. The cabinet door shall be provided with a door stop which holds the door open as a minimum at 90 degrees and 180 degrees (+/- 20 degrees).

(4) Latches and Locking Mechanism.

(a) All cabinets shall incorporate a main door lock, Corbin No. 15481RS or equivalent, constructed of nonferrous or stainless materials, which shall operate with a Traffic Industry conventional #2 key, Corbin No. 1R6380 or equivalent. A minimum of two keys shall be included for the main door of each cabinet.
(b) The cabinet door(s) shall be provided with a three-point latch. The top and bottom shall have rollers to secure the door in a closed position.

(c) When in the locked position, the lock shall prevent the movement of the three-point latching mechanism.

(d) The cabinets shall be provided with a means of externally padlocking the latching mechanism. A minimum of ⅜ inch diameter lock shackle shall be accommodated.

(5) Door Opening. The main door opening of all cabinets shall be at least 80 percent of the area of the side which the door closes, exclusive of the area of plenums.

(6) Switch Compartment.

(a) A hinged switch compartment door shall be mounted to the outside of the main cabinet door. The door shall permit access to a switch panel but shall not allow access to exposed electrical terminals or other equipment within the cabinet.

(b) In order to allow for the switch controls and storing of the manual control cord, the switch compartment with the door closed shall have minimum internal dimensions of 3½ inches high, 7½ inches wide, and 2 inches deep. Additionally, the volume shall not be less than 70 cubic inches.

(c) Switch compartment doors shall be equipped with a lock, which can be operated by a police key, Corbin Type Blank 04266, or equivalent. A minimum of two keys shall be included for the switch compartment of each cabinet.

(7) Plastic Doors. When called for on the plans, doors for the Size 4, M30, and M36 shall be vacuum formed from gray ultra violet (UV) inhibited ⅜ inch GPX 3800 Acrylonitrile Butadiene Styrene (ABS) plastic. Exterior surfaces of the door shall be laminated during the extrusion process with a 0.010 inch minimum thickness Pearl Gray Korad acrylic film for additional protection against ultraviolet degradation.

The doors shall have vacuum formed louvers for the cabinet ventilation system. The interior panel shall be vacuum formed from ¼ inch GPX 3800 gray ABS plastic and molded with ribs for rigidity and stability of the door and be provided with channels opposite the louvers for holding the cabinet's air filter. The door shall have a ⅜ inch wide door flange around the perimeter of the door that will properly fit the cabinet and gasket to provide a moisture proof seal.

The exterior of the door shall have a hair cell pattern with an overlay of the gray Korad. The interior and inside panel shall have a smooth finish without the overlay of gray Korad. All fasteners shall be stainless steel. A three point locking mechanism shall be provided. A heavy gauge continuous hinge shall have a 3/16 inch non-removable pin and attached to the cabinet with carriage bolts for vandal resistance. The door stop shall accommodate the standard cabinet door stop rod in the cabinet. A police door is not required on the plastic doors.

H. Shelves. The cabinet shall be provided with two shelves for supporting the control equipment. The shelves shall be at least 10 inches in depth.

All cabinets shall have a provision for positioning shelves to within 12 inches of the bottom of the cabinet and to within 6 inches of the top of the cabinet in increments not more than ½ inch.

I. Cabinet Risers. The M30 (when specified as base mount), M36, and the Size 6 shall be provided with a 15 inch high cabinet riser. The riser shall match the mounting base of the cabinet and be provided with anchor bolt holes on the top and bottom of the risers. The risers shall come in two parts for ease of assembly.

(1) Ventilation System. All cabinets shall incorporate a ventilation system so as to provide for the circulation of external air through the enclosure to remove excess heat, fumes, or vapors. When forced ventilation is required, each cabinet shall be equipped with an electric fan with a capacity of at least 100 cubic feet of air per minute.

(a) Fan. The fan is in a size 4 or 6 cabinet, shall be installed so that it operates in the filtered incoming air stream so as not to create a negative pressure within the cabinet relative to its outside environment. All fans shall be equipped with a guard which inhibits a user from making contact with the blades of the fan.

(b) Fan Controls. All cabinets equipped with a fan shall have a device to control the operation of the fan. The device switch-on point shall be manually adjustable at least in the range from 80°F to 120°F.

The device shall have a differential between its switch-on point and its switch-off point. This differential shall not be greater than 25°F. The device shall be located in the inside of the top of the cabinet not lower than six inches from the top of the cabinet.

(c) Filter. The cabinet shall be equipped with a device to filter the incoming air. The cabinets shall be provided with louvered vents in the main door with a replaceable air filter having a width of 16 inches, a height of 12 inches, and a thickness of 1 inch.

3. **Terminal Facility.**

A. Scope. This section defines the minimum acceptable requirements for terminal facilities to interconnect traffic signal controller units and related devices within a traffic control cabinet.

B. Mechanical Construction. The terminal facility shall conform to the following mechanical requirements.

(1) Terminal Identification. All terminals shall be permanently identified in accordance with the cabinet wiring diagram. Where through-panel terminal blocks are used, both sides of the panel shall have the terminals properly identified with the terminal position number.

Identification shall be permanently attached and close as possible to the terminal strip and shall not be affixed to any part which is easily removable from the terminal block panel.

Each input or output terminated on a terminal block shall be identified on the front of the panel by position number and function terminology (e.g., Ph 1 Red, Ph 2 Hold, etc.). The same identification must be used consistently on the cabinet wiring diagram.

(2) Component Identification. All components which make up the basic terminal facility shall be permanently identified in accordance with the cabinet wiring diagram. The following components are considered part of the basic terminal facility:

(a) Load Switch Sockets.
(b) Flash Transfer Relay Sockets.
(c) Flasher Socket.
(d) Main and Auxiliary Circuit Breakers.
(e) Radio Interference Suppressor and Surge Protector.
(f) Mercury Signal Power Relay.
(g) Power Terminal Bus Bars.

Where through-panel components are used, both sides of the panel shall have the components properly identified by relative symbols (e.g., FRI, LS1, etc.).

Identification shall be permanently attached and as close to the component as possible and shall not be affixed to any part which is easily removable from the panel.

Each component shall be identified on the front of the panel by symbol and function terminology (e.g., LF1 Filter, BR1 Signal Bus, etc.). Provisions shall be made that each load switch socket may be identified by the phase number or signal number by writing on the panel with pencil or ball point pen in an area established for same.

(3) Field Connection Identification. In addition to the terminal identification required in the paragraphs above, provisions shall be made that each group of R, Y, G, etc., field signal hook-up or detector hook-up terminals may be identified by the phase number or signal by writing on the panel with pencil or ball point pen in an area established for same.

(4) Load Switch and Flasher Support. Load switch and flasher bases shall be so designed and constructed as to receive all such devices which may be manufactured to the maximum size requirements permitted under the current *NEMA Standards Publication*.

All support(s) shall be provided so that, as a minimum, it is supporting the flasher and load switch of the maximum size at some point(s) between three inches and seven inches from the panel.

At least 90 percent of the area beneath the load switch or flasher shall be open to allow for the free flow of air across the load switches or flasher. There shall be no obstruction within one inch above or below the units within the open area.

(5) Load Switch, Flasher, and Flasher Transfer Positions. Wired load switch, flasher, and flash transfer relay sockets shall be provided in the quantities listed below:

TABLE 2: LOAD SWITCH, FLASHER, AND FLASH TRANSFER SOCKET RELAY QUANTITIES

Configuration	Controller	Load Switch	Flasher	Flash Transfer
A2	NEMA 4 Ph.	8	1	4
A5	NEMA 8 Ph.	12	1	6

The flasher socket shall be wired for a Type 3 solid state flasher conforming to Section 8 of current *NEMA Standards Publication*. Flashing of even numbered load switch output indications shall be placed on one circuit and flashing for odd numbered load switch output indications shall be placed on the other circuit. It shall be possible to flash either the amber or red indication on any load switch outputs. It shall be possible to easily change the flash indication from the front side of the panel using simple tools without the need to unsolder or resolder connections.

The load switch sockets shall be wired for triple-signal load switches conforming to Section 5 of current *NEMA Standards Publication TS 2* for Type 2 controller units. All load switch driver outputs coming out of the controller unit shall be on separate terminal points from the respective inputs to the load switches. These separate points shall be

bussed for normal operation. All load switch outputs which may be programmed for flashing or programmed for monitor connection shall be on separate points from the respective inputs to the flash transfer relays or monitor inputs. These separate points shall be bussed for normal operation. The above is to allow the pedestrian load switch position to function as a vehicle position or vice versa and for each isolation for trouble-shooting purposes.

(6) Terminal Blocks. Terminal blocks shall have mechanical characteristics to properly support the wiring connected without warping the terminal block. The threaded portion of the terminal block shall be metal. The material used shall be compatible with copper wire.

(a) Field Terminal Blocks. Field terminal blocks for all inputs and outputs for a fully expanded controller shall be included. These blocks shall be either single terminal type with through-panel connection on the rear side of the mounting panel or double binder head screw terminals. Either type of terminal block used shall be of the correct ampacity for the application. Minimum acceptable ratings are 30 amperes, 300 V, with 8-32 x 5/16 inch binder head screws.

(b) Control Terminal Blocks. Control terminal blocks for inputs and outputs of the controller unit, monitor unit, flash transfer relays, load switches, etc., shall be included. These blocks shall be either single terminal type with through-panel connections or double binder head screw terminals. Either type of terminal block used shall be of the correct ampacity for the application. Minimum acceptable ratings are 15 amperes, 250 V, with 6-32 x ¼ inch pan or binder screws.

The control terminal block wiring shall provide groupings of functions based on probable interconnect (bussing) for normal operation rather than based on the source of the wiring (e.g., controller, monitor, etc.). The above is to allow for easy reprogramming or isolation for trouble shooting purposes.

(7) Controller Unit and Monitor Unit Harnesses. The controller unit and monitor harnesses shall be neatly arranged and provided with the flexibility for the connectors to reach at least 40 inches from the top of the terminal block panel which shall be mounted directly below the controller unit shelf.

Terminal positions must be provided, completely wired and neatly arranged, providing access to all inputs and outputs listed in the controller unit specification. As a minimum, all *NEMA Standards Publication* functions of the controller unit for the configuration selected shall be terminated except those designated by *NEMA* as spares, reserved, no connection, and manufacturer's use need not be installed in the harness.

Terminal positions must be provided, completely wired and neatly arranged, providing access to inputs and outputs in the monitor. All conflict monitor input channels that can be used to monitor the maximum number of signals available in a given configuration shall be terminated. The conflict monitor supply, inputs, and outputs not required to be used in a particular configuration need not be installed in the harness. Provision shall be made to terminate any unused red monitoring inputs.

The monitor harness shall be configured for a 6 or 12 channel unit as follows:

TABLE 3: MONITOR HARNESS CONFIGURATION

Configuration	Controller	Load Switch	Monitor
A2	NEMA 4 Ph.	8	6 Channel
A5	NEMA 8 Ph.	12	12 Channel

(8) Power Distribution. The following equipment shall be supplied as part of the power distribution panel:

(a) Main Circuit Breaker.
(b) Three Auxiliary Circuit Breaker.
(c) Mercury Signal Power Relay.
(d) Radio Interference Suppressor and Surge Protector.
(e) AC-Common Bus Bar.
(f) Safety Ground Bus Bar.
(g) AC+ Power (Filtered) Bus Bar.
(h) AC+ Power (Unfiltered) Bus Bar.

(9) Practices. The basic facility shall be so designed and constructed as to be made of a minimum number of separate assemblies to reduce maintenance and handling time for knockdown and retrofit applications.

C. Electrical Requirements. The terminal facility shall conform to the following electrical requirements:

(1) Power Distribution. The terminal facility shall operate properly when supplied with single-phase AC power [95-135 V, 57-63 Hertz (Hz)]. All breakers and grounding devices shall be wired in accordance with the current *National Electric Code* (NEC) and the current *Michigan Electrical Code*.

(a) Circuit Breakers. Provisions shall be made for mounting and wiring six circuit breakers in the terminal facility. The main circuit breaker shall have an ampacity as noted below:

TABLE 4: MAIN CIRCUIT BREAKER AMPACITY

Configuration	Controller	Load Switch	Main Breaker
A2	NEMA 4 Ph.	8	30 Amperes
A5	NEMA 8 Ph.	12	50 Amperes

The main circuit breaker shall be so wired to protect the signal load circuits and controller circuits. It shall be permanently marked to identify as a service disconnect and shall be suitable for prevailing conditions. One auxiliary circuit breaker shall be rated for 20 amps in the NEMA 4 and M30 cabinet and one circuit breaker shall be rated for 30 amps in the NEMA 6 cabinet. The other breakers shall have a minimum ampacity of 10 amperes and shall be wired on the "load" side of the main breaker to protect circuits that utilize unfiltered AC+ power (e.g., flash transfer relay coils, fan motors, etc.).The circuit breakers shall be capable of manual operation with markings to indicate rating and whether it is in the open or closed position. Square D series QO circuit breakers shall be used and mounted on a QON2ACL breaker block.

(b) Radio Interference Suppressor (RFI). The terminal facility may have a RFI filter. The ampacity of the filter shall be equal to or greater than the ampacity of the main circuit breaker. The filter shall attenuate signals both line to load and vice versa. The attenuation in both directions shall be a minimum of 50 decibels over the frequency range of 200 kHz to 75 mHz.

(c) Mercury Signal Power Relay. The terminal facility shall have a signal power relay wired to provide power from the main circuit breaker and RFI filter to the AC signal power bus bar and load switches. The mercury contractor shall be energized to provide power to the signal bus and have ampacity equal to or greater than the ampacity of the main breaker.

(d) AC-Common Bus Bar. The AC-common (Neutral) shall be terminated on a solid metallic multi-terminal bus bar. This bus bar shall be insulated from the cabinet. Separate wires shall be run from this bus bar to each unit or group of similar units in the terminal facility which requires AC-common connection.

(e) Safety Ground Bus Bar. The safety (Earth/Chassis) ground shall be terminated on a solid metallic multi-terminal bus bar. This bus bar shall be connected to the cabinet.

Separate wires shall be run from this bus bar to each unit or group of similar units in the terminal facility which requires safety ground connection.

The AC-common and safety ground bus bars shall be jumpered together with a #10 American Wire Gauge (AWG).

(f) AC+ Power Bus Bars. The AC+ power in the terminal facility shall be divided into three separate and distinct circuits which are filtered AC+ power, unfiltered AC+ power, and AC+ signal power. Each shall be terminated on a solid metallic multi-terminal bus bar. These bus bars shall be insulated from the cabinet. Separate wires shall be run from these bus bars to each unit or group of similar units in the terminal facility which requires that AC power connection.

(2) Conductors. All conductors used in the terminal facility wiring shall be #22 AWG, or larger, with a minimum of 19 strands. Conductors shall conform to Military Specification MIL-W-16878, Type B or D. The insulation shall have a minimum thickness of 10 mils

and shall be nylon jacketed polyvinyl chloride or shall be irradiated cross-link polyvinyl chloride. Conductors #8 AWG may be UL Type THHN.

All conductors used in the terminal facility wiring shall conform to the following color-code requirements:

(a) The AC-common conductor of a circuit shall be identified by a continuous white color.

(b) The safety (Earth/Chassis) ground conductor of a circuit shall be identified by a continuous green color or a continuous white color with one or more green stripes.

(c) The AC+ power conductor of a circuit shall be identified by a continuous black color.

(d) The low level DC (+24 or less) conductor of a circuit shall be identified by a continuous blue color.

(e) Other conductors, not conforming to one of the above, shall be identified by any continuous color not defined above.

(3) Wiring (Power Distribution within the Facility). All terminal facility wiring shall be neat, firm, and routed, where practical, to minimize crosstalk and electrical interference. Printed circuit boards may not be used to eliminate or reduce facility wiring.

All terminal facility conductors shall be of sufficient size to carry the maximum current of the circuit or circuits they are provided for. They shall be sized based on the ampacity ratings as follows:

TABLE 5: TERMINAL FACILITY CONDUCTOR SIZE

AWG Wire Size	Ampacity Rating
#22	5 Amps
#16	10 Amps
#14	15 Amps
#12	20 Amps
#10	30 Amps
# 8	50 Amps
# 6	70 Amps

The ampacity ratings are calculated based on the current required to raise the temperature of a single insulated conductor in free air (86°F ambient) to the limit of the insulation and applying a bundle derating factor of 0.5 for wires #22 AWG through #10 AWG and a derating factor of 0.7 for wires #8 AWG and #6 AWG.

The conductor feeding power from the main circuit breaker to the RFI filter, mercury signal power relay, and AC+ signal power bus bar shall have the same ampacity as the main circuit breaker.

The conductor feeding power from the main circuit breaker to the auxiliary breaker and unfiltered AC+ power bus bar shall have an ampacity of 15 amperes.

The conductor feeding power from the main circuit breaker to the RFI filter, filtered AC+ power bus bar, and flasher socket shall have, as a minimum, an ampacity of 30 amperes.

The conductor feeding power from the AC+ signal power bus bar to each load switch socket shall have an ampacity of 10 amperes and shall be capable of being easily programmed to supply the load switch from another point or interrupt AC+ signal power to an individual load switch for special applications.

The conductors feeding power from the load switch to the field signal terminals shall have an ampacity of 10 amperes.

The conductors feeding power from the flasher socket to the flash transfer relay sockets, which feed flashing power to same, shall have an ampacity of 15 amperes. The remaining wires to and from the flash transfer relay socket, which are in the circuit between the load switch socket and the field signal terminals, are covered in the previous paragraph.

(4) Control Circuits.

(a) Flash Transfer Control. The control circuit to the flash transfer relay sockets shall be such as to provide flashing operation when the monitor or optional auxiliary equipment call for flash (e.g., police panel flash switch and maintenance panel). The flash transfer control shall also conform to the following:

The flash transfer relay socket shall be wired so the coil of the relay(s) shall be de-energized for flashing operation. The flash transfer relay sockets shall be located in close proximity to the load switches, flasher, and field signal terminals. The flash transfer relay sockets shall mate with Cinch-Jones P2408 or equivalent.

(b) Monitor Control. The monitor shall be wired so as to provide flashing operation when it detects a conflict, loss of red, +24 vdc voltage failure, controller unit voltage monitor failure, or if the monitor is disconnected. It shall also provide "Stop Time" to the controller unit when it detects a conflict, loss of red, voltage, detects simultaneous display of green and yellow lights on a channel, detects simultaneous display of green and red lights on a channel, detects minimum yellow display following a green on a channel, signal status indicators display exact location of failure, etc.The monitor shall be wired so as to provide an "External Start" signal to the controller unit upon the application of AC power to the monitor following a power interruption or upon initial turn-on.

(c) Detector Rack. The M30 and NEMA 6 controller cabinet shall be provided with a detector rack capable of providing 12 channels of vehicle detection and 4 channels of pedestrian isolation. Each aluminum rack shall be provided with a printed circuit motherboard with lug connections for the power supply module and detector modules. Each detector plug shall provide operations for 4 channels of detection. Each rack shall be designated to accept detector cards of one or 2 inches wide, 4½ inches high, and 8 inches deep. Connection to each card shall be made via 2-24 pin edge connectors. The connectors shall be keyed to prevent insertion of improper cards. The power supply and detector harnesses shall be wired directly into the terminal facilities. The twisted ends from harnesses shall be terminated on a terminal strip clearly marked for loop number and shall permit easy termination of loop lead-in wires. All unused wires from the harnesses shall be clearly marked and not terminated. The detector rack shall be securely mounted on the left side of the top shelf.

D. Field Wire Terminal Locations. The terminal facility shall provide Field Wire Terminals located to conform to the following requirements:

(1) AC Service Hookup. Incoming AC power service shall terminate on the right side of the cabinet on the power distribution panel. The incoming AC power service shall terminate in compression fittings capable of accepting a #4 AWG or #6 AWG conductor for AC+ and AC- and accepting a #8 AWG conductor for safety (Earth/Chassis) ground. The AC+ line shall terminate directly to the main circuit breaker. The AC- and safety ground lines shall terminate directly to their respective bus bars. This service hookup must meet NEC code, and Michigan Department of Labor and Economic Growth electrical codes.

(2) Signal Hookup. Signal wires shall terminate on terminal blocks on the back of the cabinet at least 3 inches but not over 6 inches from the bottom of the cabinet. Signal terminals shall be directly accessible from the front of the cabinet. One terminal shall be provided for each load switch output. It shall be possible to terminate a minimum of 16 #14 AWG or 5 #10 AWG neutral leads on the signal common bus.

(3) Detector, Interconnect, Etc. Hookup. Detector (Vehicle and Pedestrian), Interconnect, etc., shall terminate on terminal blocks on the back or left side of the cabinet at least three inches from the bottom of the cabinet. Four terminals shall be provided for each vehicle detector and one terminal shall be provided for each pedestrian detector. In addition, a terminal block shall be provided for timer disable inputs for 12 channels.

E. Auxiliary Equipment.

(1) The terminal facility shall include provisions for the following equipment:

(a) Signals On-Off Switch. A signals on-off switch shall be installed and wired in the police panel of the cabinet.

The switch and wiring shall energize or de-energize the mercury signal power relay. AC signal power shall not be routed through this switch. The switch shall be labeled "Signal-Off".

(b) Flash Normal Switch. A flash-normal switch shall be installed and wired in the police panel of the cabinet.

The switch and wiring shall energize and de-energize the flash transfer relays and provide "stop time" to the controller unit when in the "flash" position. Neither AC signal power or flashing power shall be routed through this switch. The switch shall be labeled "flash-normal".

Operation of the signal-off switch shall override this switch. That is, when in the "Off" position, the signal-off switch prevents flashing operation as called for by all flash control circuits.

(c) Manual Control Cord and Switch. A manual control cord and auto-hand switch shall be installed and wired in the police panel of the cabinet.

The switch and wiring shall energize the "manual control enable" input to the controller unit and connect the Manual Control Cord to the "interval advance" input to the controller unit. This will provide the control of "green" intervals by the manual control cord with the controller unit timing the remaining intervals, when the auto-hand switch is in the "hand" position. The switch shall be labeled "auto-hand".

(2) Maintenance Panel Options.

(a) Detector Test Switches. A detector test push-button switch for each vehicle and pedestrian detector circuit shall be provided in a panel on the inside of the front cabinet door.
The switch and wiring shall place an actuation for the respective vehicle or pedestrian phase when pushed. The switch(es) shall be labeled "call switch" and the phase # as well as whether it is vehicle or pedestrian (e.g., Ph 1 Veh, Ph 1 Ped, etc.).

(b) Stop Time Switch. A stop time switch shall be provided in a panel on the inside of the front cabinet door. The switch and wiring shall provide three modes of operation which are:

(i) Normal. "Stop time" to the controller unit is provided as required by the monitor unit or police panel flash switch.

(ii) Run. "Stop time" is prevented from being applied to the controller unit from other devices.

(iii) Stop. "Stop time" is applied to the controller unit.

This switch shall be labeled "stop-run-normal".

(c) Flash-Normal Switch. A flash-normal switch shall be provided in a panel on the inside of the front cabinet door.

The switch and wiring shall provide flashing operation as defined for police panel flash-normal switch except that "stop time" shall not be applied to the controller unit. Provisions shall be provided that this flash-normal switch shall operate as a controller unit power switch by removing a control terminal link. This switch shall be labeled "flash-normal".

(d) Duplex Receptacle. A duplex receptacle of the three-wire ground fault interrupter (GFI) type shall be provided in a panel on the inside of the front cabinet door.

(3) Miscellaneous Options.

(a) Cabinet Light. An incandescent light socket, with switch, shall be installed in the cabinet.

A door switch to activate the light(s) when the door is opened shall be provided.

The switch to activate the light shall be provided in a panel on the inside of the front cabinet door.

The switch and light shall be wired ahead of the main circuit breaker and fused separately. It is acceptable that the duplex receptacle and light share the same fuse.

There shall be an additional cabinet light and socket located (M30 cabinet) on the lower left side of the cabinet in front of and slightly below the controller shelf. It shall be operated by a thermostat that turns on both cabinet lights in cold weather.

(b) Main Power Arrestors. All main power arrestors, surrestors, thyrectors, lightning protection, over-voltage protection, voltage spike protection, or metal oxide varistors required by the supplier shall be installed and wired into the terminal facilities. An Edco SHA-1250 surge protector and filter shall be installed as the main power voltage protector. The SHA-1250 shall be provided with a plug-in base.

F. Prints, Functional Data, and Parts List. With each controller, the manufacturer shall supply each of the following items: (1) Two complete set of schematic and wiring diagrams of the controller and terminal facilities, (2) two complete sets of instructions for installation and maintenance of the controllers, (3) cabinet mounting diagram, and (4) a complete parts list.

Each of these items shall apply directly to the controller with which it is applied. There shall be two sets of the above for each unit ordered. One set is to be put in the installed controller, and one set is to be furnished to the maintaining agency.

4. **Accessories.**

A. Scope. This section defines the minimum acceptable requirements for plug-in accessories for the traffic controller assembly within a traffic control cabinet.

B. Monitor. A 6, 12, or 18 channel monitor unit of the type defined for the terminal facility denoted in the invitation to bid shall be provided for installation in the cabinet. The monitor shall conform to Section 6 of current *NEMA Standards Publication* Number.

Operational Features are as follows: Detects simultaneous display of green and yellow lights on a channel. Detects simultaneous display of green and red and green and yellow lights on a channel. Detects minimum yellow display following a green on a channel. Signal status indicators display exact location of failure on LCD panels. There

shall be a real time clock/calendar to keep track of nine previous errors. Performs all functions specified in the current *NEMA Standards Publication TS-1* Part 6. Cabinet interlock. Universal programming card. Monitors controller output voltages.

C. Flasher. A two-circuit flasher shall be provided for installation in the cabinet. The flasher shall conform to a Type 3 per Section 8 of the current *NEMA Standards Publication*.

D. Flash Transfer Relay. Flash transfer relays in the quantity of four each for the four phase and six each for the eight phase units shall be provided for installation in the cabinet. The flash transfer relays shall conform to the following requirements:

(1) Mechanical Requirements. The relay shall be enclosed in a transparent plastic case which protects the relay from dust, moisture, and other contamination. The case shall protect the user from contact with live parts and be sufficiently rugged to permit insertion and removal of the relay from its mating socket.

(2) Service Requirements.

(3) Connector. The relay shall mount on an eight-pin spade plus base and shall mate with a Cinch-Jones 240BSB socket or equivalent. The relay/base shall be wired as follows:

Pin 1 - Coil	Pin 2 – Coil
Pin 3 - #1 Closed	Pin 4 - #2 Closed
Pin 5 - #1 Common	Pin 6 - #2 Common
Pin 7 - #1 Open	Pin 8 - #2 Open

(4) Contacts. The relay shall be provided with four single-pole, double-throw (form C) contact sets. Each contact shall be rated to switch a 20 ampere tungsten load for a minimum of 30,000 operations. The contact material shall minimize welding.

(5) Coil Rating. The relay coil shall be rated for continuous duty from 95 to 135 vac. This rating shall be valid at 158°F ambient temperature outside the relay case. The relay coil shall measure less than 10 volt amperes at 120 vac. The relay shall pick up by 95 vac and drop out by 50 vac, and make the transfer within 50 milliseconds. The magnetic circuit in the relay shall reverse concurrently with the 60 Hz AC input voltage.

E. Load Switches. Solid-state cube type load switching assemblies, in accordance with current *NEMA Standards*, shall be used for opening and closing signal light circuits and shall be jack-mounted external to the controller unit. Eight load switch assemblies shall be provided (24 circuits) for the four phase units. Twelve load switch assemblies shall be provided (36 circuits) for the eight phase units. Additional load switches for 9 to 16 phases (39 - 60 circuits) shall be per the plans. The load switch assemblies shall be cube type and have indicators for active inputs and also the active outputs.

5. **Exceptions.** Any exceptions to these specifications shall be described in detail by the bidder in his proposal. Failure to do so may result in the bidder being disqualified.

6. **Packing and Marking.** Except as otherwise specified in the request for quotation, each controller shall be packed separately in such a manner that there will be no injury or defacement to the controller during transportation to the point of destination. Each carton shall be legibly marked with the controller description, purchase order number, and vendor's name.

7. **Sampling and Testing.** One or more controllers shall be selected at random from the shipment and tested in accordance with department methods for compliance with the requirements of these specifications. The vendor shall complete one controller for preliminary testing and inspection to determine compliance with these specifications. If this one controller conforms to these specifications, the vendor will be notified in writing and shall furnish the remainder of the order, which will be subject to testing in accordance with departmental methods. If the preliminary sample does not conform to these specifications, either the order will be canceled or the vendor will be notified, in writing, of all deficiencies so that the necessary changes or corrections to all controllers on the purchase order may be made. The entire order will then be subject to testing in accordance with departmental methods.

8. **Patented Processes and Materials.** The vendor shall defend any and all patent infringement suits resulting from the use of any design, device, material or process, or portion or phase thereof, employed in the manufacture or use of said controllers in accordance with the department's plans and specifications, and he shall save harmless and indemnify the department on account of any and all such suits or claims for royalties, damages, or costs.

c. Construction. The furnishing and installation of the 4 to 16 Phase Digital Actuated *NEMA* Type Traffic Signal Controller shall be as indicated on the plans. All work shall comply with Sections 819 and 820 of the Standard Specifications for Construction, the applicable “typical” construction details, and this special provision.

d. Measurement and Payment. The completed work as described will be measured and paid for using the following contract items (pay items):

Contract Item (Pay Item)	Pay Unit
Controller and Cabinet, Solid State Actuated	Each
Controller and Cabinet, Solid State Actuated, Delivered	Each

MICHIGAN
DEPARTMENT OF TRANSPORTATION

SPECIAL PROVISION
FOR
SOLID-STATE FLASHING BEACON CONTROLLER AND CABINET

a. Description. Furnish all labor, equipment, and material required to install a Solid State Flashing Beacon Controller and Cabinet, as indicated on the plans, including mounting brackets, surge protection, hardware, fittings, wiring, grounding, conduits, and any associated material necessary to complete the work.

b. Materials. Material shall meet Sections 918 and 921 of the Standard Specifications for Construction and the requirements of this Special Provision.

1. **Flasher Controller.** Each controller shall be one of the following National Electrical Manufactures Association (NEMA) types:
   - NEMA Type 1 – 20 Amperes, single-circuit
   - NEMA Type 2 – 10 Amperes, dual-circuit
   - NEMA Type 3 – 15 Amperes, dual-circuit

The flasher controller shall not exceed the nominal dimensions of 8.25 inches long, 1.9 inches wide and 4.2 inches high. The flasher controller shall integrate with a Cinch-Jones socket Type S-406 or approved equal.

The flasher controller shall operate at 120 volts alternating current (VAC) at 60 hertz (Hz). This input source shall supply power for the output circuit and to the flasher logic. The flasher controller output shall provide a range of 50 up to and including 60 flashes per minute with an On Period of 50 +/- five percent.

2. **Cabinet.** An Eagle-240 cast aluminum type cabinet, or approved equal, shall be used for advance warning flashing beacon type installations or other applications where the conduit feed into the cabinet is two inches or less. The flasher controller cabinet shall have the nominal dimensions of 13 11/16 inches high, 10 13/16 inches wide, and 6 21/32 inches deep.

3. **Equipment Box.** A flasher controller equipment box enclosure shall be used for intersection overhead flashing beacon installations (with dual displays, illuminated case sign), advance warning sign flashing beacon installations (school or fire station type with radio assemblies), or other applications where the conduit feed into the cabinet is greater than two inches (three inches typical). The equipment box enclosure shall have the nominal dimensions of 16 inches high, 14 inches wide, and 12 inches deep, and be manufactured from 1/8 inch thick aluminum meeting American Society for Testing Material (ASTM) 5052-H32 or approved equal. The equipment box shall have a nominal 1/2 inch lip formed on the opening to allow the equipment box door gasket to seal out dust and moisture. The equipment box enclosure shall have four standoffs mounted on the inside to accommodate a back-panel.

   A. **Painting.** The inside of the enclosure shall be painted white. The exterior shall be finished with a durable and weather-resistant protective coating having a total dry film

thickness of not less than 1.5 mils. The final coating shall be aluminum in color with a total dry film thickness of not less than 0.75 mils.

B. **Door.** The door shall be equipped with a weather tight seal consisting of a neoprene sponge rubber type gasket approximately 5/8 inches wide by 3/16 inches deep. The door shall include a heavy duty stainless steel continuous hinge, be provided with a lock and lock cover to prevent dust and moisture from entering the lock assembly, and have two Corbin Type Blank 04266 type keys or approved equal.

C. **Back-Panel.** The back-panel shall be aluminum 1/8 inches thick and have nominal dimensions of 15 inches wide and 11 1/2 inches wide. The back-panel shall be attached to the standoffs with four 1/2 inch, 10-32 stainless steel Phillip head/star type screws and four lock washers. The panel shall not have any other holes drilled except those necessary to attach the panel to the standoffs.

4. **Packing and Marking.** Each Solid-State Flashing Beacon Controller and Cabinet shall be individually packaged in such a manner that it will be accepted by common carriers and no injury or defacement will occur to the contents during transportation to the point of destination. Each package shall be legibly marked with the content description, order number, and vendor's name.

5. **Inspection.** Inspection shall be performed by the Michigan Department of Transportation (MDOT) or the agency representing MDOT. Test reports shall be furnished upon request by the agency for conformance to these specifications. Any unit not meeting performance specifications will be returned to the Contractor.

6. **Warranty.** The Contractor shall provide materials with a manufacturer's guarantee/warranty, transferable to MDOT, that the supplied materials will be free from all defects in materials and workmanship for a specified period from the date of shipment. The Contractor shall supply the Engineer with any guarantee/warranty documents for the manufacturer and a copy of the invoice showing date of shipment.

c. Construction. Work shall be done in accordance with the plans and comply with Sections 819 and 820 of the Standard Specifications for Construction and this Special Provision.

d. Measurement and Payment. The completed work as described shall be measured and paid for using the following contract item (pay item):

Contract Item (Pay Item) Pay Unit

Flsh Beacon, Controller and Cabinet, Solid State .....Each

MICHIGAN
DEPARTMENT OF TRANSPORTATION

SPECIAL PROVISION
FOR
SOLID-STATE FLASHING BEACON CONTROLLER (CAP TYPE)

T&S:DJA 109 of 232 C&T:APPR:JKG:GJB:06-30-06

a. Description. Furnish all labor, equipment, and material required to install a Solid-State Flashing Beacon Controller (Cap Type) to operate flashing sign optical beacons. The term "solid state" shall be construed to mean that the main current to the signal load is not switched by electromechanically operated contacts. The flashing beacon controller cap shall be designed to be installed into the signal head or sign optical. The flashers are suitable for flashing tungsten lamp loads.

b. Materials. Material shall meet Sections 918, 919, and 921 of the Standard Specifications for Construction and this Special Provision. Standard 12-sided mushroom caps will provide the housing for dual circuit versions. The circuitry is to be encapsulated in epoxy to provide a rugged maintenance-free unit capable of withstanding the environmental requirements at the signal head. A lock ring and gasket are included. The unit has a #8 ring terminal attached to 12 inches of hookup wire for each lead. The color of the cap shall be green.

c. Construction. The furnishing and installation of a Flashing Beacon Controller (Cap Type) shall be as indicated on the plans. All work shall comply with Sections 819 and 820 of the Standard Specifications for Construction, the applicable “typical” signal construction detail(s), and this Special Provision.

Electrical Characteristics. Input to the flasher controllers shall be 120 VAC nominal at 60 Hertz. This input shall supply the power for the output circuit and also provide power to the flasher logic. The operating temperature range shall be -30°F to 165°F (-35°C to 74°C).

The flasher controller output shall provide not less than 50 or more than 60 flashes per minute with an on period of 50± five percent.

The flasher unit shall be dual circuit, have a minimum load current of three amps and zero voltage switching.

Packing and Markings. Except as otherwise specified, each flasher controller shall be packed separately in such a manner that there will be no injury or defacement during transportation to the point of destination. Each shipment shall be legibly marked with part description, purchase order number, and supplier's name.

Sampling and Testing. Test sampling of solid-state flasher controllers will be done at random from shipments received in compliance with accepted departmental procedures. If preliminary sample testing does not conform to these specifications, the order may either be canceled or the supplier will be notified, in writing, of deficiencies so that necessary changes or corrections can be made.

Patented Processes and Materials. The supplier shall defend any and all patent infringement suits resulting from the use of any design, device, material or process, or portion of phase thereof, employed in the manufacture or use of the flasher controllers in accordance with the department's

plans and specifications, and shall save harmless and indemnify the department on account of any and all such suits or claims for royalties, damages, or costs.

d. Measurement and Payment. The completed work as measured will be paid for at the contract unit price for the following contract item (pay item):

Contract Item (Pay Item) Pay Unit

Flsh Beacon, Controller and Cabinet, Solid State (Cap Type).....Each

The contract unit price each for **Flsh Beacon, Controller and Cabinet, Solid State (Cap Type)** shall be payment in full for furnishing all labor, equipment, and material required to install the electronic cap flasher in the sign optical unit and all necessary equipment, hardware, conduit risers, cable, wiring, necessary rewiring of signal head(s), and grounding to complete the work.

MICHIGAN DEPARTMENT OF TRANSPORTATION

SPECIAL PROVISION
FOR
SYSTEM MASTER, ON STREET, DELIVERED

T&S:SAS 1 of 232 C&T:APPR:JJG:JKG:05-20-05

a. Description. The completed work shall consist of furnishing and installing the on-street master controller, surge protection, mounting brackets, fittings, wiring, line hardware, grounding, and all other materials, labor and equipment as required to provide a complete and operating job.

b. Materials.

1. The on-street master may be located at an intersection and connected via the communication network to a minimum of thirty-two (32) local intersection controllers. The master shall be capable of implementing Traffic Responsive control, Time Base control, Manual control or Remote control modes of operation for two (2) groups of intersections. Such control shall be totally independent for each group and assignment of intersections to a group shall not require hardware changes.

Analysis of sampling sensor data from a minimum of sixty-four (64) system detectors and corresponding selection of the most efficient traffic responsive timing pattern shall be provided by the on-street master during the traffic responsive mode of operation.

Automatic and continuous monitoring of system activity shall be provided by the on-street master to include master, intersection, and error monitor alarm conditions.

System parameter entry shall be provided via the on-street master including all master and local intersection parameters. Master parameters shall include:

1. System coordination setup and pattern data entry by group,
2. System time base event scheduler,
3. System traffic responsive computational and pattern selection setup by group
4. Intersection system group and detector assignments.

In order to provide effective and efficient system management, all local intersection parameters and real time status shall be accessible remotely via the on-street master front panel.

The on-street master shall provide comprehensive system report generation including, as a minimum: system, intersection, detector and failure status and history reports in addition to system performance reporting.

An RS-232C interface shall be provided on the on-street master to allow for printing of reports or for interconnecting to a remote central site.

To enhance overall system operation and increase system management flexibility, the on-street master shall also support two-way dial-up communications to a central-office

computer for control, monitoring, data collection and for timing pattern updating purposes, all from a remote central-office location. Continuous, 7 days/week, 24 hours/day system monitoring shall be enhanced by the on-street master's capability to automatically dial-up the central-office computer upon detection of user defined critical alarm conditions.

The on-street master shall maintain as a minimum the following master-level historical report data on: Critical Alarms, Master Alarms, Communications Failures, Group Pattern Changes, Traffic Responsive Pattern Changes, System Detector V+O percent, On-line/Off-line history. This master-level report data shall be directly obtainable from the master controller, whereas intersection-level reports shall be obtained from the local system intersection controller.

This master area responsive controller shall be fully compatible with the specified "four- or eight-phase digital-actuated controller" and "solid-state pre-timed interval oriented controller" contained elsewhere in this proposal or system.

The master shall include all necessary hardware, software and cabling to communicate and operate the system.

2. Physical Design. The (on street) master shall conform to the following maximum limits, height 12 x width 18 x depth 10 inches. The chassis will be metal and be designed for easy access to the circuit boards for testing without disassembly or extender boards. The master display shall have a minimum of eight lines and 40 characters per line with the character height a minimum of 0.24 inches. The master shall meet all current NEMA environmental standards for actuated controllers.

c. Construction. The master controller shall be mounted in the base mount controller at the location specified on the plans or as otherwise directed by the Engineer. The master controller will not be mounted in the proposed location until all signal controllers on the job are installed and functional and until all interconnect is functional. All work shall be done in accordance with Sections 819 and 820 of the Standard Specifications for Construction.

d. Measurement and Payment. The completed work as described will be measured and paid for at the contract unit price for the following contract item (pay item):

Contract Item (Pay Item)	**Pay Unit**
System Master, On St., Delivered	Each

The contract unit price each shall consist of furnishing and installing the antenna, surge protection, mounting brackets, fittings, wiring, line hardware, grounding, cable to controller, and such other materials, labor and equipment as necessary to provide a complete and operating job.

MICHIGAN
DEPARTMENT OF TRANSPORTATION

SPECIAL PROVISION
FOR
LIGHT EMITTING DIODE (LED) VEHICLE TRAFFIC SIGNALS

T&S:DJA 1 of 232 C&T:APPR:JKG:DBP:01-18-07

a. Description. Furnish all labor, equipment, and material required to install Light Emitting Diode (LED) Vehicle Traffic Signals in either a new traffic signal installation or as a retrofit unit capable of replacing the optical unit of existing vehicular traffic signal sections meeting the Institute of Transportation Engineers (ITE) for Vehicle Traffic Control Signal Heads (VTCSH) LED Circular Signal Supplement dated June 27, 2005 and LED Vehicle Arrow Traffic Signal Supplement, Version: April 3, 2006. This includes installation of LED traffic signal modules for ball and/or arrow lenses and removal of the existing lamp, socket assembly gasket, reflector and door assembly (when appropriate), hardware, fittings, conduit, riser(s), grounding and ground rod(s), cable, and such other material to complete the work. The LED modules shall be provided, installed in an Eagle Signal type (or approved equal) polycarbonate door and visor assembly, when being used as a retrofit in an existing signal head. The polycarbonate door and visor assembly is included in the cost and will not be paid for separately.

The LED signal shall provide a safe, minimum performance requirement and achieve the minimum intensity requirements of the ITE photometric test criteria as described in the ITE VTCSH: LED Circular Signal Supplement dated June 27, 2005, and the LED Vehicle Arrow Traffic Signal Supplement, Version: April 3, 2006. If requested, the manufacturer shall provide independent lab test results certifying the LEDs meet ITE specifications for LED signals.

All LED signals shall be Dialight, Gelcore, or approved equal. All LED signals shall be the latest model currently in production and new. Equipment no longer being manufactured shall not be accepted even if it meets the following specifications. All LED signals installed at a location shall be produced by the same manufacturer.

The reference to LED signals or module includes both circular and arrow modules unless otherwise noted.

b. Materials. Material shall meet Sections 918 and 921 of the Standard Specifications for Construction and the requirements of this Special Provision.

1. **Physical and Mechanical Requirements**:

   A. Each LED module shall be a self-contained, sealed unit consisting of a lens, color coded leads with pre-insulated spade lugs, LED assembly, power supply, and a one-piece neoprene gasket. Materials used for the lens and module construction shall conform to American Society for Testing and Materials (ASTM) specifications for the materials, where applicable. Enclosures containing either the power supply or electronic components for the signal module shall be made of UL94 flame retardant materials. When retrofitting into an existing traffic signal housing, the LED module shall be provided in a new signal door and visor assembly.

B. The assembly and manufacturer's process for the LED assembly shall be designed to assure all internal LED and electronic components are adequately supported to withstand mechanical shock and vibration per MIL-STD-883, Test Method 2007. The LED vehicle signal manufacturer shall be ISO 9001 certified.

C. The LED signal module shall be protected against dust and moisture intrusion per the requirements of MIL-STD-810F procedure I, Rain and Blowing Rain. The test is to be conducted on stand-alone units with no protective housing required.

D. The LED signal module lens shall be made from ultraviolet stabilized polycarbonate. The red, yellow, and green lens shall be color tinted to match the color of the LEDs. The lens shall require no special tools for replacement. The lens shall be hard coated or otherwise made to comply with the material exposure and weathering effects requirements of the Society of Automotive Engineers (SAE) J576. The lens shall be securely attached to the signal body using waterproof silicone seal.

E. The external lens surface for all vehicle signals shall be smooth, with no raised features, to minimize the collection of dirt, diesel smoke, and other particulate contaminates, and to facilitate periodic cleaning.

F. Each signal module shall be identified with the manufacturer's name, model number, serial number on the outside of the unit, related voltage, and power consumption. The identification tag shall be attached using polyester or vinyl self-adhesive labels and be visible without disassembly of the signal module. Paper labels shall not be used.

G. Each LED signal module shall have a prominent and permanent vertical indication for proper orientation inside a traffic signal housing.

H. Each LED module shall incorporate a dual lens approach utilizing a single inner collimating lens and a single outer spreading lens. The inner Fresnel lens shall serve to collimate the light emitted by the LED light engine and shall span the full diameter of the interior of the signal. The outer lens shall have raised optical detail on its inner surface in which serves to distribute the light rays in order to meet the intensity and distribution standards required by this specification.

I. Each LED module shall incorporate two separate printed circuit boards, one for the LED light source, and the other for the power supply. The LED modules shall consist of high flux LEDs mounted on a metal core circuit board via thermal epoxy and the LED electrical contacts shall be soldered to the circuit board. A single layer of thermal transfer material shall be included between the metal core printed circuit board and the module's heat sink to ensure optimum transfer of heat away from the LED p-n junctions.

J. The lens assembly shall disperse the light such that individual LEDs are not readily visible from vehicles.

K. The LED signal shall be watertight when properly installed in a traffic signal housing. The LED signal module(s) shall utilize the same mounting hardware used to secure an incandescent lens and gasket assembly, and shall only require a screwdriver or standard installation tool to complete the mounting. The LED signal module assembly shall weight less than five pounds.

L. The LED arrow module shall be mounted and soldered to a printed circuit board. The LED arrow module shall incorporate a single lens approach, where the single outer lens serves both to spread and diffuse the light from the LEDs. A black arrow mask shall be incorporated behind the outer lens to enhance the definition of the arrow icon. The outer lens shall have raised optical detail on its inner surface in which serves to distribute the light rays in order to meet the intensity and distribution standards required by this specification.

2. **Aluminum Vehicular Traffic Signals and Mounting Assemblies**:

A. LED traffic signal modules shall not require special installation tools. The LED modules shall fit into existing Eagle Signal type (or approved equal) traffic signal housings without modification of the signal housing. Installation of the LED module shall only require removal of the existing lamp, socket assembly, gasket, and reflector. The LED module shall be installed in the existing door and connected to the existing terminal block. Screw-in type products are not allowed for vehicle signals.

B. Each LED module shall be a self-contained unit consisting of a lens, color coated leads with pre-insulated spade lugs, LED assembly, power supply, and a one-piece neoprene gasket.

3. Electrical Requirements:

A. The LED signal module shall operate from a 60 hertz (Hz) line frequency and over a voltage range of 80-135 volts (V). A change of luminous intensity of no more than ± 10 percent shall be allowed over the voltage range.

B. The LED signal module shall operate over a temperature range of –40 °F to 165 °F (-40 °C to 74 °C).

C. Each LED signal module shall be provided with two color coded #18 gauge minimum, anti-capillary 39 inch long, 600V, jacketed wires, conforming to the *National Electrical Code* (NEC), rated for service at + 221 °F (+105 °F). The LED module wire leads shall be provided with insulated spade lug terminals for connection to existing traffic signal terminal blocks.

D. The LED signal module shall include voltage surge protection to withstand high-repetition noise transients and low-repetition, high-energy transients as stated in current *National Electrical Manufacturers Association* (NEMA) *Standard Publication TS-2*.

E. The LED circuitry shall prevent flicker at less than 100 Hz over the voltage range 80-135 V per the current ITE VTCSH.

F. The LED signal and associated on-board circuitry must meet Federal Communications Commission (FCC) Title 47, Sub Part B, Section 15 regulations concerning the emission of electronic noise by Class A digital devices.

G. Power factor shall be 90 percent or greater, at nominal rated voltage, at 77 °F (25 °C). Total harmonic distortion (THD) shall be less than 20 percent at rated voltage, at 77°F (25°C).

H. The failure of a single LED shall cause loss of light from only that LED. No loss of light output from the complete module assembly shall occur as a result of a single LED failure in a LED ball lamp.

I. The LED module shall be designed to detect catastrophic loss of the LED load. Upon sensing the loss of the LED load, the module shall present a resistance of at least 250 k Ω across the input power leads within 300 msec. The LED light source will be said to have failed catastrophically if it fails to show any visible illumination when energized according to Section 5.2.1 of the ITE VTCSH: LED Circular Signal Supplement, dated June 27, 2005, after 75 msec or Section 5.7 of the LED Vehicle Arrow Traffic Signal Supplement, Version: April 3, 2006.

J. The LED signal module shall be operationally compatible with currently used controller assemblies (solid state load switches, flashers, and conflict monitors).

K. The LED modules shall be wired with #18 American Wire Gauge (AWG) or larger, color-coded thermoplastic insulated wire.

L. A six-point terminal block with screw terminals, for use with spade lugs of brass, stainless steel, or other suitable non-corrosive material shall be provided for connection of wires from the LED module and the cable from the signal controller. The terminal block shall be mounted in the center section of the signal face and shall have a minimum of 1-inch lateral clearance from the housing and shall be held in place with stainless steel screws.

M. The terminal block, in addition to other requirements, shall be so mounted and located in the housing as to minimize the danger of electrical shock to personnel performing maintenance duties on the signal head.

4. **Power Consumption and Operational Range**:

A. All LED traffic signal modules shall meet the minimum intensity requirements while operating over the temperature range of –40 °F to 165 °F (-40 °C to 74 °C) for a period of 5 years.

B. Each high flux LED shall be capable of being driven continuously at a minimum of 350 milli-amp (ma) and have a minimum power dissipation rating of 1 watt.

C. LEDs shall not illuminate for input voltages below 35 V and shall illuminate for all input voltages higher than 45 V and be regulated above 80 V.

D. Maximum power consumption for 8 and 12 inch LED red ball traffic signal modules shall consume no more than 6 and 9 watts respectively, at 120 Volts Alternating Current (VAC), at 77 °F (25 °C).

E. Maximum power consumption for 8 and 12-inch LED yellow ball traffic signal modules shall consume no more than 13 and 19 watts, respectively, at 120 VAC, at 77 °F (25 °C).

F. Maximum power consumption for 8 or 12-inch LED green ball traffic signal modules shall consume no more than 6 and 12 watts, respectively, at 120 VAC, at 77 °F (25 °C).

G. Maximum power consumption for 12-inch LED red arrows shall consume no more than 7 watts at 120 VAC, at 77 °F (25 °C).

H. Maximum power consumption for 12-inch LED yellow arrows shall consume no more than 9 watts at 120 VAC, at 77 °F (25 °C).

I. Maximum power consumption for 12-inch LED green arrows shall consume no more than 7 watts at 120 VAC, at 77 °F (25 °C).

J. Each LED module shall reach 90 percent of their full illumination (turn-on) within 75 msec of the application of the nominal operating voltage. The modules shall not have any visible illumination (turn-off) after 75 msec of the removal of the nominal operating voltage.

K. The Red LEDs shall utilize exclusively Aluminum (Al) Indium (In) Gallium Phosphide (GaP) technology, either Absorbing Substrate (AS) or Transparent Substrate (TS), and shall not exhibit degradation of more than 30 percent of their initial light intensity following accelerated life testing [operating at 185℉ (85℃) and 85 percent humidity, for 1000 hours]. Al Ga As technology is not acceptable.

L. The Green LEDs shall utilize Indium Gallium Nitride technology. Green LED traffic signal modules shall not be illuminated when the applied voltage is less than 35 VAC. They shall be illuminated (unregulated) when the applied voltage is 45 to 80 VAC. Their illumination shall be in compliance with the ITE VTCSH, Part II, when applied voltage is between 80 and 135 VAC.

M. The Yellow LEDs shall utilize Al In GaP technology, either AS or TS. Yellow LED traffic signal modules shall not be illuminated when the applied voltage is less than 35 VAC. They shall be illuminated (unregulated) when the applied voltage is 45 to 80 VAC. Their illumination shall be in compliance with the ITE VTCSH when applied voltage is between 80 and 135 VAC.

N. The LED modules shall be operationally compatible with *NEMA TS-1* and *NEMA TS-2* conflict monitoring parameters.

5. **Photometric Requirements**:

A. The minimum initial luminous intensity values for the LED traffic signal module shall be as defined in Section 4, Table 1 of the ITE VTCH:LED Circular Signal Supplement dated June 27, 2005, and the LED Vehicle Arrow Traffic signal Supplement, Version: April 3, 2006.

B. When operated within the temperature range specified in Section 3.3.2 of the ITE VTCSH: LED Circular Signal Supplement dated June 27, 2005, and the LED Vehicle Arrow Traffic Signal Supplement, Version: April 3, 2006, the actual luminous intensity for a module shall not exceed three times the required peak value of the minimum maintained luminous intensity for the selected signal size and color.

C. The uniformity of the signal output across the entire module lens shall not exceed a ratio of 10 to 1 between the maximum and minimum luminance values (cd/m^2).

D. The appearance of the module to the motorist shall almost perfectly approximate the appearance of a standard incandescent signal indication. The surface of the LED module shall appear to be nearly totally uniform in illumination and eliminate the visibility of individual LEDs to the motorist.

E. The measured chromaticity coordinates of LED traffic signal modules shall conform to the color regions based on the 1931 CIE chromaticity diagram as listed in the ITE VTCSH: LED Circular Signal Supplement dated June 27, 2005.

F. The dominant wavelength for any individual color measurement of a portion of the emitting surface of a module shall be within ±3nm of the dominant wavelength for the average color measurement of the emitting surface as a whole.

G. The LED modules shall be operationally compatible with *NEMA TS-1* and *NEMA TS-2* conflict monitoring parameters.

H. The LED traffic signal module shall meet the minimum luminous intensity values listed in Table 1 for circular modules or Table 2 for arrow modules for a period of 60 months.

Table 1 provides the minimum maintained luminous intensity values for the VTCSH: LED Circular Signal, for the range from 12.5 degrees above to 22.5 degrees below the horizontal plane, and from 27.5 degrees left to 27.5 degrees right of the vertical plane, at 5 degree increments.

Table 1

Minimum Maintained Luminous Intensity Values — VTCSH: LED Circular Signal

Vertical Angle	Horizontal Angle	Luminous Intensity (candela)					
		8-inch			12-inch		
		Red	Yellow	Green	Red	Yellow	Green
+12.5	2.5	17	41	22	37	91	48
	7.5	13	33	17	29	73	38
+7.5	2.5	31	78	41	69	173	90
	7.5	25	62	32	55	137	71
	12.5	28	45	24	40	100	52
+2.5	2.5	68	168	88	150	373	195
	7.5	56	139	73	124	309	162
	12.5	38	94	49	84	209	109
	17.5	21	53	28	47	118	62
	22.5	12	29	15	26	64	33
-2.5	2.5	162	402	211	358	892	466
	7.5	132	328	172	292	728	380

Vertical Angle	Horizontal Angle	Luminous Intensity (candela)					
		8-inch			12-inch		
		Red	Yellow	Green	Red	Yellow	Green
	12.5	91	226	118	201	501	261
	17.5	53	131	69	117	291	152
	22.5	28	70	37	62	155	81
	27.5	15	37	19	33	82	43
-7.5	2.5	127	316	166	281	701	366
	7.5	106	262	138	234	582	304
	12.5	71	176	92	157	391	204
	17.5	41	103	54	91	228	119
	22.5	21	53	28	47	118	62
	27.5	12	29	15	26	64	33
-12.5	2.5	50	123	65	110	273	143
	7.5	40	98	52	88	218	114
	12.5	28	70	37	62	155	81
	17.5	17	41	22	37	91	48
	22.5	8	21	11	18	46	24
	27.5	5	12	6	11	27	14
-17.5	2.5	23	57	30	51	127	67
	7.5	18	45	24	40	100	52
	12.5	13	33	17	29	73	38
	17.5	7	16	9.	15	36	19
	22.5	3	8	4	7	18	10
-22.5	2.5	17	41	22	37	91	48
	7.5	13	33	17	29	73	38
	12.5	10	25	13	22	55	29
	17.5	5	12	6	11	27	14
-27.5	2.5	12	29	15	26	64	33
	7.5	8	21	11	18	46	24

Note 1: Luminous intensity values for equivalent left and right horizontal angles are the same.
Note 2: Tabulated values of luminous intensity are rounded to the nearest whole value.

Table 2 provides the minimum maintained luminous intensity values for the VTCSH: LED Vehicle Arrow Traffic Signal, for the range from 12.5 degrees above to 22.5 degrees below the horizontal plane, and from 27.5 degrees left to 27.5 degrees right of the vertical plane, at 5 degree increments.

Table 2

Vertical Angle (deg)	Horizontal Angle (deg)	Luminous Intensity (candela) 12 inch arrow Red	Yellow	Green
+12.5	2.5	6	15	8
	7.5	5	12	6
+7.5	2.5	11	28	14
	7.5	9	22	11
	12.5	6	16	8
+2.5	2.5	24	60	31
	7.5	20	49	26
	12.5	13	33	17
	17.5	8	19	10
	22.5	4	10	5
-2.5	2.5	57	143	75
	7.5	47	116	61
	12.5	32	80	42
	17.5	19	47	24
	22.5	10	25	13
	27.5	5	13	7
-7.5	2.5	45	112	59
	7.5	37	93	49
	12.5	25	63	33
	17.5	15	36	19
	22.5	8	19	10
	27.5	4	10	5
-12.5	2.5	18	44	23
	7.5	14	35	18
	12.5	10	25	13
	17.5	6	15	8
	22.5	3	7	4
	27.5	2	4	2
-17.5	2.5	8	20	11
	7.5	6	16	8
	12.5	5	12	6
	17.5	2	6	3
	22.5	1	3	2
-22.5	2.5	6	15	8
	7.5	5	12	6
	12.5	4	9	5
	17.5	2	4	2
-27.5	2.5	4	10	5
	7.5	3	7	4

Note 1: Luminous intensity values for equivalent left and right horizontal angles are the same.
Note 2: Tabulated values of luminous intensity are rounded to the nearest whole value.

6. **Quality Assurance.** LED modules shall comply with the quality assurance production testing, inspection, and design as specified in the ITE VTCSH: Light Emitting Diode (LED) Circular Signal Supplement dated June 27, 2005, and LED Vehicle Arrow Traffic Signal Supplement, Version: April 3, 2006.

7. **Tests, Inspection, and Sampling.** Each LED module is to be tested as necessary and inspected for conformance with the specification before shipment. Failure of any piece of equipment to meet the requirements of this specification shall be cause for rejection.

8. **Drawings and Information.** If required, two copies of drawings of the signal head and LED module showing manufacturer's part numbers for all parts shall be provided.

Independent test lab reports indicating that the material being proposed to furnish meets or exceeds these specifications and all Quality Assurance Testing and Inspection per Section 6 of the ITE VTCSH: LED Circular Signal Supplement dated June 27, 2005 and LED Vehicle Arrow Traffic Signal Supplement, Version: April 3, 2006 shall be supplied. Failure to provide the independent lab test reports shall be cause for rejection.

The information required under paragraphs one and two along with a sample, if requested, will be held as standards for acceptance.

9. **Warranty**. The Contractor shall provide materials with a manufacturer's warranty/guarantee, transferable to MDOT, that the supplied materials will be free from all defects in materials and workmanship for the stated time period from the date of shipment. The Contractor shall supply the Engineer with any warranty/guarantee documents from the manufacturer and a copy of the invoice showing date of shipment.

c. Construction. The furnishing and installation of the Light Emitting Diode (LED) Vehicle Traffic Signals shall be as indicated on the plans. All work shall comply with Sections 819 and 820 of the Standard Specifications for Construction, the applicable "typical" signal construction detail(s), and this Special Provision.

LED traffic signal modules shall not require special tools for installation. The LED modules shall fit into existing Eagle Signal type (or approved equal) traffic signal housings without modification of the signal housing. Installation of the LED module shall only require removal of the existing lamp, socket assembly, gasket, and reflector. The LED module shall be connected to the existing terminal block. Screw-in type products are not allowed for vehicle signals.

The current version of Michigan Department of Transportation (MDOT) Special Provision for Aluminum Vehicular Traffic Signals and Mounting Assemblies shall be used for meeting all requirements for signal faces, mounting assemblies, paint, and color with the optical unit modified for use of LED signal modules.

d. Measurement and Payment. The completed work as described will be measured and paid for using the following contract items (pay items):

Contract Item (Pay Item)	Pay Unit
TS, ___ Way ___ Mtd (LED)	Each
TS, ___ Way ___ Mtd, ___ (LED)	Each
TS, ___ Way ___ Mtd (LED) Retrofit Assembly	Each
TS, ___ Way ___ Mtd, ___ (LED) Retrofit Assembly	Each
TS, 4th Level, ___ (LED)	Each
TS, 4th Level, ___ (LED) Retrofit Assembly	Each

MICHIGAN
DEPARTMENT OF TRANSPORTATION

SPECIAL PROVISION
FOR
24 x 30 INCH DISAPPEARING LEGEND CASE SIGN

T&S:DJA 122 of 232 C&T:APPR:JG:GJB:03-11-02
Revised:08-30-06

a. Description. Furnish all labor, equipment, and material required to install a Disappearing Legend Case Sign including fittings, hardware, cable, connections, and any associated material necessary to complete the work.

b. Materials. Material shall meet Sections 918 and 921 of the Standard Specifications for Construction and the requirements of this Special Provision.

1. General Requirements. The sign shall be a single message fiber optic type and display a message upon actuation. The sign face shall appear blank when not activated. No phantom message shall be seen under any ambient light condition. The sign shall consist of:

   A. Weatherproof housing and doors
   B. Fiber optic modules
   C. Color filters
   D. Light sources
   E. Transformers

   The signs shall be constructed in a workman-like manner in accordance with the plans and specifications. Moving components, such as doors, etc., shall have proper fit and free movement.

2. Housing, Door, Face, and Components. The sign housing shall be constructed of 0.100 inch extruded aluminum eight inches deep with a 0.063 inch flat aluminum back welded into the housing. All corners and seams of the housing shall be continuously welded by the inert gas process.

   Doors shall be 0.125 inch extruded aluminum with one side removable for access to the sign face. Continuous stainless steel hinges 0.040 x 1.5 inch open shall connect the housing and doors.

   The sign face shall be 0.125 inch flat aluminum, or equivalent, and shall have the fiber optic assembly mounted to it. The sign shall have two Simmons #3, ¼ turn link-locks per door to tightly secure the door onto the gasket. Door gaskets shall be 3/16 x one inch neoprene to provide a weatherproof seal.

   The mounting hubs shall be of malleable iron alloy with 1½ inch standard pipe thread. The hub and gasket shall be secured by three 5/16 x one inch stainless steel hex head bolts and nuts.

Drainage shall be provided by four one inch holes with drain screens at the base of each corner of the housing.

Unless otherwise specified, all hardware, such as bolts, hinges, etc., shall be of American Iron and Steel Institute (AISI) Series 300 stainless steel.

3. Functional Requirements. The sign shall be capable of continuous operation over a range in temperatures from -35°F to 165°F.

   The sign shall display the message by utilizing a single row of fiber optic bundles to form each character. Every other bundle shall originate from a different light source to provide fail safe operation, should lamp failure occur. The message shall be clearly legible for a minimum of 300 feet, attracting attention under any lighting condition.

   Light sources shall be provided by 42-watt E.P.T. bulbs operated between 10.5 and 10.8 volts with an average 8,000 hour life.

   Transformers shall be used to reduce line voltage to 10.8 volts AC and have a Class A insulation and weather proofing, rated at 48.5 volt-amps.

4. Fiber Optic Modules. The fiber optic modules and associated components shall be assembled directly to the sign face and shall have an inside back cover to provide protection for the modules. The fibers shall consist of fiber optic glass bundles arranged to define the required message. The fiber optic bundles shall be ground smoothly and optically polished at the input and output ends for maximum light transmission. The message color shall be yellow, using tempered glass color filters.

5. Painting Requirements. Prior to painting the case sign, all metal surfaces shall be cleaned and surface treated in accordance with standard industry practice to assure bonding of the paint to the metal.

   The coating system shall consist of durable and weather-resistant enamels of the color specified and shall be applied at a uniform thickness without blisters, runs, or other defects. The average dry film thickness shall be 1.5 mils and determined by Method A, Inductance Thickness Gage, as specified in measurement of Dry Film Thickness of Nonmetallic Metal Base, Varnish, Lacquer, and Related Products Applied on a Nonmagnetic Metal Base, ASTM D 1400. The metal interior of the sign, all internal metal components, and inside of the sign visor shall be flat black.

   The exterior of the sign shall be coated with a semi-gloss or gloss yellow enamel, as specified on the plans or order. When yellow is specified, the color of the coating shall match the central color within the limits shown on the “Highway Yellow Color Tolerance Chart,” except that the color shall not be darker than the central color.

6. Packing and Marking. Each finished sign shall have a permanent legible marking which shall include the vendor’s name, trademark, or other suitable means of identification.

   Each sign shall be individually packaged in such a manner that it will be accepted by common carriers and there will be no injury or defacement to the sign during transportation to the point of destination. Each package shall be legibly marked with the descriptions of contents, purchase order number, and vendor’s name.

7. Sampling and Testing. Inspection, sampling, and testing shall be performed by the department. Mill test reports shall be furnished upon request by the department for all aluminum extrusions.

   At the time of delivery, the supplier shall furnish a certificate affirming the pretreatment requirements as specified under "Painting Requirements" have been complied with. The certification shall name the method and material used in the pretreatment process.

8. Patented Processes and Materials. The vendor shall defend any and all patent infringement suits resulting from use of any design, device, material, process, or phase thereof, employed in the manufacture or use of specified equipment in accordance with the department's plan and specifications, and shall save harmless and indemnify the department on account of any and all suits or claims for royalties, damages, or costs.

c. Construction. The furnishing and installation of the Disappearing Legend Case Sign shall be as indicated on the plans. All work shall comply with Sections 819 and 820 of the Standard Specifications for Construction, the applicable "typical" signal construction detail(s), and this Special Provision.

d. Measurement and Payment. The completed work as measured will be paid for using the following contract item (pay item):

Contract Item (Pay Item)	**Pay Unit**
Case Sign, Disappearing Legend, 24 inch by 30 inch	Each

For **Case Sign, Disappearing Legend, 24 inch by 30 inch,** the contract unit price each shall consist of furnishing all labor, equipment, and material necessary to install the case sign, including mounting hardware, connectors, fittings, wiring, and any other materials, necessary to complete the work.

MICHIGAN
DEPARTMENT OF TRANSPORTATION

SPECIAL PROVISION
FOR
INTERCONNECT ENCODER AND DECODER

a. Description. Furnish all labor, equipment, and material required to install Interconnect Encoder and/or Decoder including hardware, connections, and all other material necessary to complete the work. The encoder and decoder shall be compatible for fixed rate flasher units of both one and two circuit designs.

b. Material.

1. ENCODER: Tone channels shall be able to share the same communication link, i.e. voice grade telephone lines for transmission.

   The tone transmitter shall contain a power supply, line connector and terminals in an open frame circuit board four x four inch. Output shall be factory-set to 645 Hz. Output level shall be adjustable from -12 Db to +2 Db. Harmonic distortion shall be -35 Db down from the fundamental frequency. Operating temperature range shall be -30 °F to 130 °F. Input voltage range shall be 90 to 135 VAC with power requirements of 120 VAC, 3 watts.

2. DECODER: Tone channels shall be able to share the same communication link, i.e. voice grade telephone lines for receiving.

   The tone receiver shall contain a power supply, output relay and line connector, and input and output terminals in an open frame circuit board four x four inch.

   The receiver frequency shall be factory-set to 645 Hz. Sensitivity shall also be factory-set to -35 Db. Rejection of an adjacent channel shall be 300 Db or greater. Operating temperature range shall be -30 °F to 130 °F. Power requirements shall be 120 VAC nominal (90 to 135 VAC) at 8 watts.

3. Connectors: Terminal strip connectors shall be designated as follows:

TABLE 1: TERMINAL STRIP CONNECTORS

	ENCODER		DECODER
Terminal	1 - 120 VAC	Terminal	1 - 120 VAC
	2 - 120 VAC		2 - 120 VAC
	3 - Common		3 - Normally Open
	4 -		4 - Normally Closed
	5 -		5 - Relay Common
	6 - Input		6 -
	7 - Communication Line		7 - Communication Line
	8 - Communication Line		8 - Communication Line

4. Packing and Markings. Except as otherwise specified in the request for quotation, each encoder or decoder shall be packed separately in such a manner that there will be no injury or defacement to either encoder or decoder during transportation to the point of destination. Each shipment shall be legibly marked with part description, purchase order number, and supplier's name.

5. Sampling and Testing. Test sampling of encoders and decoders will be done at random from shipments received in compliance with accepted departmental procedures. If preliminary sample testing does not conform to these specifications, the order may either be canceled or the supplier will be notified, in writing, of deficiencies so necessary changes or corrections can be made.

6. Patented Processes and Materials. The vendor shall defend any and all patent infringement suits resulting from the use of any design, device, material or process, or portion of phase thereof, employed in the manufacture or use of the encoders or decoders in accordance with the department's plans and specifications, and shall save harmless and indemnify the department on account of any and all such suits or claims for royalties, damages, or costs.

c. Construction. Furnishing and Installation of Encoder and/or Decoder shall be as indicated on the plans in accordance with the MMUTCD. All work shall comply with Sections 819 and 921 of the Standard Specifications for Construction and this Special Provision.

Encoder and/or Decoder Removal shall include the necessary hardware connections and all associated material to complete the removal work. All removal work shall comply with Section 204 of the Standard Specifications for Construction.

d. Measurement and Payment. The completed work as described will be measured and paid for at the contract unit for the following contract item (pay item).

Contract Item (Pay Item)	Pay Unit
Encoder	Each
Encoder, Rem	Each
Decoder	Each
Decoder, Rem	Each

The contract unit price each for **Encoder** shall be payment in full for furnishing all labor, equipment, and material required to install the tone encoder in the cabinet, fittings, connectors, wiring, and all other material necessary to complete the work.

The contract unit price each for **Encoder, Rem** shall be payment in full for furnishing all labor, equipment, and material required to remove the tone encoder in the cabinet, fittings, connectors, wiring, and all other material necessary to complete the work. Storage or disposal of materials is also included in the item and will not be paid for separately.

The contract unit price each for **Decoder** shall be payment in full for furnishing all labor, equipment, and material required to install the tone decoder in the cabinet, fittings, connectors, wiring, and all other material necessary to complete the work.

The contract unit price each for **Decoder, Rem** shall be payment in full for furnishing all labor, equipment, and material required to remove the tone decoder in the cabinet, fittings, connectors, wiring, and all other material necessary to complete the work. Storage or disposal of materials is also included in the item and will not be paid for separately.

MICHIGAN
DEPARTMENT OF TRANSPORTATION

SPECIAL PROVISION
FOR
MAST ARM MOUNT SIGNAL BRACKET
1-WAY STAINLESS STEEL BAND MOUNT

a. Description. This specification describes the requirement for a mast arm signal bracket one-way stainless steel band mount.

b. Bracket Specifications.

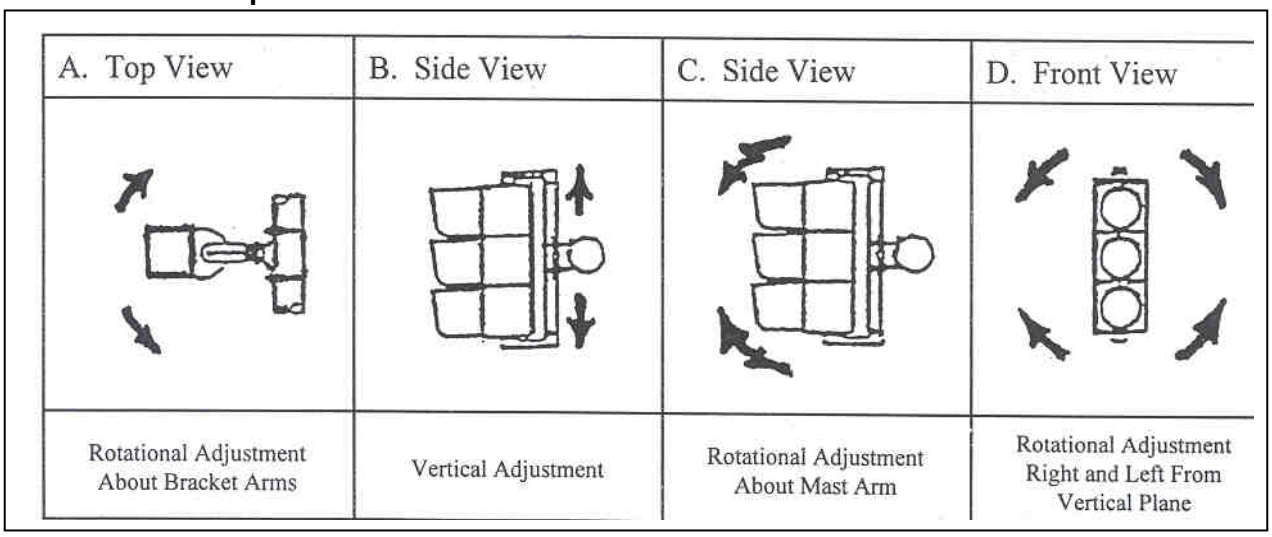

1. Adjustability. The bracket shall be completely adjustable such that it combines all four (4) of the adjustments indicated as A through D.

TABLE 1: SIGNAL HEAD BRACKET ADJUSTMENT

2. Attachment. The bracket shall be provided with Type 201 Stainless Steel Band to fasten the bracket to the supporting arm or structure. The bracket shall be easily adjustable to fit all sizes of round, octagonal, elliptical or other shaped structure without special tools or equipment.

3. Signal Accommodations. The bracket shall attach to the signal in a clamping manner holding the signal both top and bottom in order to assure maximum rigidity. A standard bracket (Figure 1) shall accommodate all major signal manufacturer's signals from a three (3) Section One-Way, eight inch Signal through a three (3) Section One-Way 12 inch Signal and any combination thereof including 3M and ICC configurations.

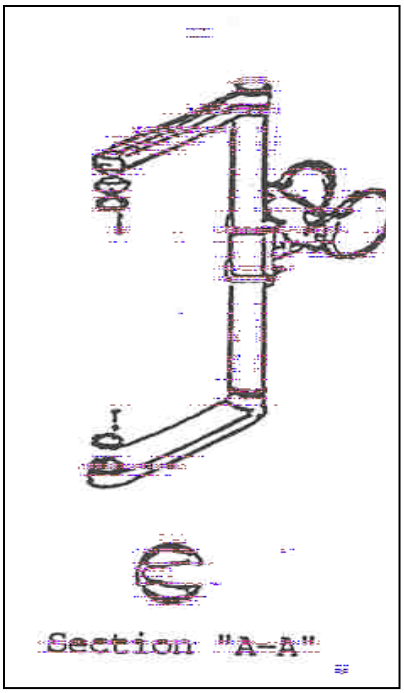

4. All electrical wiring shall be completely concealed within the bracket. The vertical support shall be a gusseted “C” shaped extruded aluminum tube to accommodate the signal cable regardless of vertical positioning of the tube.

5. Material and Design.

   A. Upper and Lower Arms shall be cast from 319 aluminum or equivalent. The lower bracket arm shall be internally threaded to accommodate the threaded vertical support tube. The lower arm shall be furnished with ABS plastic covers which will slide and snap into position without the use of fasteners or tools. All upper and lower arms shall have 72 tooth serrations cast into the arm to assure a positive lock with signal housing and shall be secured about their rotational axis with setscrews. Both upper and lower arm shall have a tri-bolt arrangement for attachment to the signal housing. Opening in the lower arm shall accommodate a minimum of three, 12 conductor 14 gauge cables.

   B. The Vertical Support Tube shall be a double gusseted tube extruded from 6083-T8 aluminum alloy and have a cross section as shows in Section “A-A.” Each tube shall be complete with a Vinyl Closure Strip and be threaded on one end to accommodate the lower arm assembly.

   C. Mast Arm Clamp Assembly. Both male and female halves shall be cast from 356-T8 aluminum alloy or equivalent. The male clamp half shall be secured within the female half, utilizing a spring steel retainer ring. Such assembly shall provide an unobstructed center of 2_ inch minimum diameter, allowing for 360 degree rotation of the clamp assembly. There shall be no internal cross bracing assembly obstructing the center opening.

   D. The Mast Arm Clamp Assembly shall be equipped with two (2) stainless steel bands, _ inch wide, 0.045 inch thick, and 29 inches long. Stainless steel bands shall have a minimum tensile strength of 100,000 psi. A set screw secured buckle shall be utilized in securing the band.

   E. The Clamp Screw for attaching the stainless bands to the clamp kit shall be a 7/16 inch - 14 x three inch one piece unit drop forged from C-1045 carbon steel or 410 stainless steel with a minimum tensile strength of 80,000 psi. and shall be formed with a slot sized to accept a _ inch band.

   F. Hardware. Each bracket shall be complete with all necessary bolts, washers, gaskets, etc. to allow assembly of the signal to the bracket and the bracket to the mast arm.

6. Finish.

   A. All aluminum parts shall have an Alodine 1200 (or equivalent) finish.

   B. All steel parts shall have a yellow zinc di-chromate finish.

c. Construction Methods. The mast arm mount signal bracket shall be as specified herein, and as shown on plans or an approved equal.

MICHIGAN
DEPARTMENT OF TRANSPORTATION

SPECIAL PROVISION
FOR
STEEL TRUSS ARMS

T&S:DJA 131 of 232 C&T:APPR:JKG:DBP:11-17-06

a. Description. Furnish all labor, equipment, and materials necessary to either install or remove Steel Truss Arms for Video Detection Cameras and Radio Antennas including any associated materials required to complete the work as described.

b. Material. Materials shall meet Sections 918 and 921 of the Standard Specifications for Construction and the requirements of this Special Provision.

1. Truss brackets formed from round tube and steel bar or plate and complete with stainless steel U-bolts, nuts, and washers for mounting to steel poles or curved plate with bolt holes for mounting to wood poles. All trusses shall have an 18 degree rise in top arm tube from mounting plate to device attachment location. A ⅞ inch rubber grommet shall be located within three inches of the mounting base plate on the underside of the upper arm tube.

2. Truss.

   A. Wood Pole Mount. The arm tubes shall be made of ASTM A500 Grade B steel, with 2⅞ inch outside diameter (o.d.) x 0.203 inch thick tubing overlapped and welded to 2⅜ inch o.d. x 0.154 inch thick stock tubing for 16 foot, 18 foot, and 20 foot arms or 2⅜ inch o.d x 0.120 inch thick for 15 foot and shorter arms. One-half x two inch flat bar ASTM A-36 steel shall be welded between arm tubes to form the truss. The pole mounting plate will be formed by ⅜ inch A-36 steel plate and plate gussets welded to the arm tubes per mounting plate detail on the truss arm drawing. There will be one plate per arm tube. Each plate shall incorporate two 0.562 inch diameter holes and one 0.687 x 1.50 inch keyhole for lagging to the wood pole.

   B. Steel Pole Mount. The arm tubes shall be made of A500 Grade B steel, with 2⅜ inch o.d x 0.120 inch thick tubing and welded to ¼ inch formed A-36 steel mounting plate for 1½ foot, 4 foot, 6 foot, 9 foot, 12 foot, 15 foot, and 18 foot arms. One-half x two inch flat bar A-36 steel shall be welded between arm tubes to form the truss. One-quarter inch flat bar steel gussets shall be welded between the arm tube and mounting plate. U-bolts shall be used to attach trusses to steel pole. Pole diameter range of 8½, up to, but not including 9⅛ inches shall use ⅝ inch rod bolts and pole diameter range of 9⅛, up to and including 10¼ inches shall use ¾ inch rod U-bolts. Hex nut, flat and lock washer shall be used for U-bolt fastening. U-bolts and hardware are to be A-36 steel.

3. Finishes. Camera truss arm, all brackets, and hardware shall be hot dipped galvanized after fabrication and welding according to ASTM A123 and A153 where applicable. Welding shall be according to AWS D1.1 - Structural Welding Code - Steel.

c. Construction. The truss arm installation shall be governed by the *National Electrical Code*, the Standard Specifications for Construction, and applicable "typical" traffic signal construction details. All truss arms (whether for radio antennas or for video detection cameras) shall be installed after all other signal equipment (span wire, signal heads, strain poles, etc.) has been installed. Premature installation of the bracket arm may require movement of the truss arm in order to optimize system performance as directed by the Engineer. Any movement of the arm under these circumstances shall be paid for by the Contractor, and shall not be an extra item for payment or for time extension purposes.

Remove the Steel Truss Arm Bracket shall be as indicated on the plans and include hardware, cable connectors, and all other material required to complete the work. Storage or disposal of the removed material will be performed as directed by the Engineer and Section 204 of the Standard Specifications for Construction. All work shall comply with Sections 819 and 820 of the Standard Specifications for Construction.

d. Measurement and Payment. The completed work as described shall be measured and paid for at the contract unit price for the following contract items (pay items):

Contract Item (Pay Item)	**Pay Unit**
Bracket, Truss, with ___ Foot Arm	Each
Bracket, Truss, Rem	Each

The contract unit price each shall be payment in full for furnishing and installing **Bracket, Truss, With __ Foot Arm**, hardwire, fittings, cable, connectors, ground rod(s), ground wire, grounding, and other material required to complete the work as described.

The contract unit price each shall be payment in full for furnishing all labor and equipment required for **Bracket, Truss, Rem**, associated assembly, hardware, fittings, cable, connectors, grounding, and other material required to complete the work. Storage and disposal of materials is also included in the item and will not be paid for separately.

MICHIGAN
DEPARTMENT OF TRANSPORTATION

SPECIAL PROVISION
FOR
SPREAD SPECTRUM WIRELESS INTERCONNECT
FOR CLOSED LOOP TRAFFIC SIGNAL SYSTEM

T&S:TSU 133 of 232 C&T:APPR:JKG:MF:07-08-02
REVISED:05-20-05

a. General. The following shall be the minimum requirement for a Wireless Interconnect Package:

1. Shall operate in the license-free, Spread Spectrum band (902-928 MHz), utilizing Frequency Hopping technology.

2. Shall be compatible with the Communications Protocol of an Eagle Marc Master System, or approved equal, for both RS232 and FSK.

3. Shall utilize 139 user-selectable channels, with 62 available hopping sequences, (two shall be non-overlapping).

4. Shall be completely configurable via included ControlPAK software. Units currently in the Field must be compatible with existing systems. Current units in the Field are manufactured by ENCOM Inc.

5. Shall have software features to provide remote programming, remote maintenance and spectrum analyzer included.

6. Shall have an RS232 interface capable of 1200 bps to 115.2 Kbps with an eight or nine bit format or 1200 bps Bell 202 FSK (2 or 4-wire); RS-485 interface shall be optional.

7. Shall have a maximum eight milli-second end-to-end latency.

8. Shall have LED indicators for PWR, TX DATA, RX DATA and the active data port.

9. Shall have DB9F connector for RS232 port and RJ22 for FSK.

10. Shall have an operating temperature of -30 to 165EF.

11. Shall operate with voltages between 10.8 volts DC and 30 volts DC, with a maximum current draw of 265 milli-amps.

12. Shall have a radio sleep mode with a maximum current draw of <1 milli-amp.

13. Shall be programmable for RF output levels of 1 milli-watt, 10 milli-watt, 100 milli-watt or 1 watt.

14. Shall provide 16-bit CRC error checking with auto re-transmit.

15. Shall be available as shelf mounted, rack-mounted or NEMA 4X weatherproof versions.

16. Shall not require controller hardware or software modifications.

17. Shall have built-in store-and-forward repeater.

b. Shelf Mount Unit (FSK Option):

1. Shall be ENCOM COMMPAK Model 5100S (FSK), or approved equal.

2. Shall not exceed nine inches long x two inches wide x five inches high.

3. Shall have reverse sex TNC female antenna connector.

4. Shall be supplied with 120 volt AC Wall Cube Power Supply.

5. Shall have RSSI signal strength LEDS.

c. Shelf Mount Unit (Standard RS232 Option):

1. Shall be ENCOM COMMPAK Model 5200S (RS232), or approved equal.

2. Shall not exceed 4.38 inch depth x 3.56 inch width x 1.69 inch height (not including connectors or mounting bracket).

3. Shall have reverse sex TNC female antenna connector.

4. Shall have power cable supplied with radio modem.

5. Shall have RSSI signal strength LEDS.

d. Antennas, Connectors, and Cable:

1. Shall be a Quantity of two (2) 10 Db Yagi Antennas, specified for the frequency range of the radio, configured for back to back operation, connected to a Pasternack PE-2047 Power divider, or approved equal, for the Master Location.

2. Shall be a 10 Db Yagi Antenna, specified for the frequency range of the radio, for Secondary Locations.

3. LMR 400 DB Cable, or approved equal, shall be used for connection between both the polyphaser and power divider and power divider and antenna for the master location. LMR 400 DB cable shall be used between the polyphaser and the antenna for the secondary locations.

4. Shall be TC-400-NMH Type N Male Connectors, or approved equal, fastened at the ends of the LMR 400 Cable for connection to polyphaser, power divider, and antenna.

e. Surge Protection:

1. Shall be an IS-50NX-C2 Polyphaser, or approved equal, Surge protection device installed between the antenna/power divider and the radio equipment.

f. Documentation. Complete instructions for hardware installation, programming and system commissioning shall be included.

g. Software. Shall be compatible with Windows 2000/XP graphical user interface (GUI). Supports remote diagnostics and radio link tests with no additional hardware. Up to three message lengths to test various network configuration and link requirements. Supports system wide remote configuration from master radio location. Provides tools for radio system optimization.

h. Warranty. Within one year from the date of factory shipment, return to factory if defective.

i. Construction. The construction shall be governed by Sections 819 and 820 of the 2003 Standard Specifications for Construction, signal detail ST-42, and this special provision. The Contractor shall install the radio antennae at the spot designated on the plans or as directed by the Engineer. The radio antennae shall be installed after the rest of the signal equipment (signal heads, poles, case signs, span wire, etc.) has been installed. Premature installation that is found to be non-optimal placement of the radio antennae shall be corrected by the Contractor at his cost. Any reorientation or movement of the radio antennae shall not be considered for extra payment or time extensions.

j. Measurement & Payment. The completed work as described shall be paid for at the contract unit price for the following contract items (pay items):

Contract Item (Pay Item)	**Pay Unit**
TS, System, Wireless Interconnect	Each
TS, Antenna	Each

For **TS, System, Wireless Interconnect**, the contract unit price each shall be payment in full for furnishing and installing the wireless interconnect package in the cabinet, shelf mounted unit, power supply, processor (with radio modem, when appropriate), surge protection, mounting brackets, hardware, antennae, cable, connectors, and such other material as may be required to provide a complete and operating job.

For **TS, Antenna**, the contract unit price each shall be payment in full for furnishing and installing the antenna, surge protection, mounting brackets, fittings, wiring, line hardware, grounding, cable to controller, and such other material as may be required to provide a complete and operating job.

MICHIGAN
DEPARTMENT OF TRANSPORTATION

SPECIAL PROVISION
FOR
FLASHER CABINET ASSEMBLY
95-690 WATT SOLAR POWERED FLASHER APPLICATIONS

a. Description. Furnish all labor, equipment, and materials to install a Solar Power Flasher Cabinet Assembly, cabinet, flashing beacon LED signal (sign optical), hardwire, wiring, grounding, conduit riser(s), and all associated material necessary to complete the work. The flasher cabinet assembly shall be wired for a two (2) circuit 12 volt DC flasher for a 24 hour application. Each flasher assembly will be used to operate a flashing warning device. Power for the flasher cabinet assembly shall be supplied by at least one 12 volt battery charged from the sun's energy.

b. Material.

1. Flasher. The flasher cabinet shall include a plug-in, two (2) circuit 12 volt DC flasher and base. The flasher shall be of all solid state construction and shall be rated at a minimum of 6.0 amps per circuit. The flasher shall utilize zero-voltage turn-on and turn-off of current, thus, eliminating electromagnetic interference.

2. Voltage and Current Indicators. The flasher cabinet shall include an LED to indicate the voltage level of the battery and an LED to indicate the output of the solar panel.

   The flasher cabinet shall include a 10 amp fuse to protect the load and the solar charging system.

3. Automatic Sequencing Charger (ASC). The flasher cabinet shall include an automatic sequencing charger (ASC). The ASC shall be 100 percent solid state and be designed for use as a battery charge regulator in photo voltaic (solar) energy systems.

   The ASC will allow maximum solar panel current to flow into the battery until the battery voltage reaches the charge termination set point. When the battery voltage drops to the charge resumption set point, the ASC will allow charging to resume.

   The ASC shall have terminals to accept up to 10AWG wire.

4. Field Terminal Block. A barrier type terminal block shall be used to terminate all wires. The terminal block shall have at least eight (8) positions to terminate the following functions:

   A. Solar Panel +
   B. Solar Panel -
   C. (Not Used)
   D. Battery +
   E. Battery -
   F. Load-1 from the flasher.
   G. Load-2 from the flasher.
   H. DC common from flasher.

All of the above functions shall be clearly marked on the panel adjacent to the terminal block by either etching or silk screen process.

5. Cabinet. The cabinet shall have a shelf for mounting a flasher panel. The flasher, automatic sequencing charger, and field terminal block shall be wired to the flasher panel.

   The cabinet shall be fabricated of 0.125 inch sheet aluminum. The cabinet shall be weatherproof using a neoprene gasket and shall be supplied with a standard police lock and key. The cabinet shall be of sufficient size to house two (2) 100-amp hour batteries. The outside dimensions of the cabinet shall be a minimum of 26 inches high x 17 inches wide x 16 inches deep. The outside of the cabinet shall be the natural aluminum finish.

   The flasher cabinet shall be supplied with appropriate hardware for mounting to a 4½ inch outside diameter (o.d.) pedestal pole for 95 watt solar power flasher applications using Pelco SE-1100 mounting kit, or approved equal. For the 690 watt solar powered flasher application, the flasher cabinet shall be supplied with appropriate hardware for mounting to a tapered steel pole (14 foot).

6. LED Signal. The flashing signal (sign optical) shall be a nominal 12 inch LED signal operating on 12 volt D.C. The LED signal shall consume no more than 26 watts and maintain a minimum candela output of 639 cd. Traffic signal brackets shall be provided as indicated on the plans.

7. Warranty. Each flasher cabinet assembly shall be warranted free from defects in material and workmanship for a period of one year from installation or fifteen (15) months from the date of shipment from the factory, whichever occurs first. Any warranty service required shall be promptly performed at the manufacturer's facility or the manufacturer's authorized service agency.

c. Construction. The furnishing and installation of the Solar Power Flasher Cabinet Assembly shall be as indicated on the plans and in accordance with the MMUTCD. All work shall comply with Sections 819 and 921 of the Standard Specifications for Construction and this Special Provision.

d. Measurement and Payment. The completed work as described will be measured and paid for at the contract unit price for the following contract item (pay item):

Contract Item (Pay Item)	**Pay Unit**
Solar Power Flasher Cabinet Assembly	Each

The contract unit price each for **Solar Power Flasher Cabinet Assembly** shall be payment in full for furnishing all labor, equipment, and material required to install the flasher cabinet assembly for various solar powered flashing beacon signal operations, cabinet, battery(s), automatic sequencing changer, light emitting diode (LED) flasher signal (sign optical), hardware, cable, connectors, conduit riser(s), grounding, ground rod(s), and all other material necessary to complete the work.

MICHIGAN
DEPARTMENT OF TRANSPORTATION

SPECIAL PROVISION
FOR
SOLAR PANEL ARRAYS FOR
90 - 115 WATT SOLAR POWERED FLASHER APPLICATIONS

T&S:DJA 138 of 232 C&T:APPR:JKG:MF: 02-15-06

a. Description. Furnish all labor, equipment, and materials to either install or remove Solar Panel Arrays including solar panels, junction box, brackets, hardware, cable, conduit riser(s), and all associated material necessary to complete the work. The solar panel arrays shall be compatible for various solar powered traffic signal flashing operations.

b. Material.

1. Solar Panel Array. The solar panel array shall consist of one or more solar panels. The number of solar panels required will be determined by the following:

   A. Number and wattage of signal indications.
   B. Hours of operation per day.
   C. Number of days of operation per week.
   D. Average hours of sun per day (Winter).

2. Solar Panels. Each solar panel shall be ultra-high efficient type made of superior quality encapsulation materials. The front surface of the solar panel shall be manufactured with an impact resistant glass front for strength and maximum light transmission. Each solar panel shall be framed with a rugged anodized aluminum frame and a tough, multi-layered polymer back sheet.

   A weather resistant junction box shall be provided for connection of the wires to the cabinet assembly. The junction box shall be located so easy access can be achieved for maintenance and servicing.

3. 90 Watt Panel. Each individual solar panel shall generate a nominal 90 watts of power in direct sunlight at a typical operating voltage of 17.4 volts with an optimum current rating of 5.17 amps. The overall dimensions of each 90 watt solar panel shall not exceed 56.89 inches width x 22.8 inches width and each panel shall weigh less than 25 pounds. (Note: These panels can be joined together to make larger wattage panels such as 180 and 270 watt panels).

4. 115 Watt Panel. Each individual solar panel shall generate a nominal 115 watts of power in direct sunlight at a typical operating voltage of 21.0 volts with an optimum current rating of 6.89 amps. The overall dimensions of each 115 watt solar panel shall not exceed 56.93 inches width x 25.2 inches width and each panel shall weigh less than 30 pounds. (Note: These panels can be joined together to make larger wattage panels such as 230 and 345 watt panels).

5. Mounting Brackets. The solar panel array shall be equipped with a mounting bracket for affixing the solar panels to the top of a 4½ inch outside diameter (o.d.) pole. The mounting bracket shall be of a slip-fitter type design to slip over the top of the pole.

6. Warranty. The solar panels(s) shall be warranted free from defects in material and workmanship for a period of one year from date of shipment from the factory.

c. Construction. The furnishing and installation of the Solar Panel Array shall be as indicated on the plans and in accordance with the MMUTCD. All work shall comply with Sections 819 and 921 of the Standard Specifications for Construction and this Special Provision.

Solar Panel Array removal includes the Solar Panel Array, solar panel(s), cabinet, hardware, and all associated material to complete the removal work. All removal work shall comply with Section 204 of the Standard Specifications for Construction.

d. Measurement and Payment. The completed work as described will be measured and paid for at the contract unit price for the following contract items (pay items):

Contract Item (Pay Item)	Pay Unit
Solar Panel Array	Each
Solar Panel Array, Rem	Each

The contract unit price each for **Solar Panel Array** shall be payment in full for furnishing all labor, equipment, and material required to install the solar panel array(s) for various solar powered flashing beacon signal operations, solar panel(s), weather resistant junction box, mounting brackets, hardware, cable, connectors, conduit riser(s), grounding, ground rod(s), and all other material necessary to complete the work.

The contract unit price each for **Solar Panel Array, Rem** shall be payment in full for furnishing all labor, equipment, and material required to remove the solar panel array(s) for various solar powered flashing beacon signal operations, solar panel(s), weather resistant junction box, mounting brackets, hardware, cable, connectors, conduit riser(s), grounding, ground rod(s), and all other material necessary to complete the work. Storage or disposal of materials is also included in the item and will not be paid for separately.

MICHIGAN
DEPARTMENT OF TRANSPORTATION

SPECIAL PROVISION
FOR
VIDEO TRAFFIC DETECTION SYSTEM

T&S:DJA 140 of 232 C&T:APPR:RJZ:DBP:06-27-07

a. Description. Furnish all labor, equipment, and material required to install or remove a Video Traffic Detection System and/or Camera at an intersection which shall detect vehicles on a roadway using only video images of vehicle traffic and be compatible with solid state pretimed or actuated traffic signal control equipment and cabinet environments.

b. Material. Material shall meet Sections 918 and 921 of the Standard Specifications of Construction and this Special Provision.

1. **System Requirements.**

A. System Hardware. The video detection system shall consist of one, two, or four video cameras; a video detection processor (VDP) which mounts in a standard detector rack; a detector rack mounted extension module (EM); surge suppressor for each video input; and a pointing device.

B. System Software. The system shall include software, which detects vehicles in multiple lanes using only the video image. Detection zones shall be defined using only a video menu and a pointing device to place the zones on a video image. Up to 24 detection zones, per camera, shall be available.

2. **Functional Capabilities.**

A. The VDP shall process video from one, two, or four sources, depending upon the VDP module used. The source can be a video camera, Digital Video Disc (DVD) or video tape player. The video shall be input to the VDP in National Transmission Standards Committee (NTSC) or Programmable Array Logic (PAL) composite video format and shall be digitized and analyzed in real time. Dual and quad video VDP's shall process images from all video inputs simultaneously.

B. The VDP shall detect the presence of vehicles in up to 24 detection zones per camera. A detection zone shall be approximately the width and length of one car.

C. Detector zones shall be programmed via a menu displayed on a user supplied video monitor with a pointing device connected to the VDP. The menu shall facilitate detection zone placement. A separate computer shall not be required for programming detection zones.

D. The VDP shall store up to three different detector zone patterns. The VDP can switch to any of the three different detector patterns within one second of user request via menu selection with the pointing device.

E. As an option, programming the system shall be available with a computer via an EIA-232 port.

F. The VDP shall detect vehicles in real time as they travel across each detector zone.

G. The VDP shall accept new detector patterns from an external computer through the RS-232 port when that computer uses the correct communication protocol for downloading detector patterns.

H. The EM shall be available to avoid the need of rewiring the detector rack by enabling the user to plug an extension module into the appropriate slot in the detector rack. The EM shall be connected to the VDP by an 8-wire cable with modular connectors. VDP and EM communications shall be accommodated by methods using differential signals to reject electrically coupled noise. The EM shall be available in both 2 and 4 channel configurations. EM configurations shall be programmable from the VDP. A separate Input/Output (I/O) module with 24 outputs – 8 inputs, using external wire harness for expanded flexibility, shall also be available.

I. The camera system shall be able to transmit the composite video signal, with minimal signal degradation, up to 1,000 feet under ideal conditions.

3. **Vehicle Detection.**

A. Up to 24 detection zones, per camera, shall be supported and each detection zone can be sized to suit the site and desired vehicle detection region.

B. Detection zones may be ANDed or ORed together to indicate vehicle presence on a single detector output channel.

C. Placement of detection zones shall be done using a pointing device, and a graphical interface built into the VDP and displayed on a video monitor. No separate computer shall be required to program the detection zones.

D. Up to three detection zone patterns shall be saved for each camera within the VDP memory. This memory shall prevent loss during power outages. The VDP shall continue to operate using the existing zone configurations even when the operator is defining/modifying a zone pattern. The new zone configuration shall not go into effect until the configuration is saved by the operator.

E. Selection of the detection zone pattern for current use shall be done through a menu. It shall be possible to activate a detection zone pattern from VDP memory and have that detection zone pattern available within one second of activation.

F. The VDP system shall have the capability to automatically switch to any one of the stored configurations based on the time of day which shall be programmable by the user.

G. Detection zone outputs shall be configurable to allow the selection of presence, pulse, extend, and delay outputs. Timing parameters of pulse, extend, and delay outputs shall be user definable between 0.1 to 25.0 seconds.

H. When a vehicle is detected crossing a detection zone, the detection zone shall activate on the video overlay display to confirm vehicle detection.

I. Detection shall be at least 98 percent accurate in good weather conditions, and at least 96 percent accurate under adverse weather conditions (i.e., rain, snow, or fog), which reduce visibility. Detection accuracy is dependent upon camera placement, camera quality, and detection zone location. These accuracy levels do not include allowances for occlusion or poor video due to camera location or quality.

J. The VDP shall provide dynamic zone reconfiguration (DZR) to enable normal detector operation of existing zones (except the one being added or modified) during the setup process. The VDP shall output a constant call on any detection channel corresponding to the zone being modified.

K. Detection zones shall be directional to reduce false detections from objects traveling in directions other than the desired direction of travel in the detection area.

L. Detection zone setup shall not require site-specific information such as latitude and longitude to be entered into the system.

M. Detection zone setup shall not require temporal information such as date and time.

N. The VDP shall process the video input from each camera at 30 frames per second.

O. The VDP shall output a constant call for each enabled detector output channel if a loss of video signal occurs. The VDP shall output a constant call during the background learning period.

4. **VDP and EM Hardware.**

A. The VDP and EM shall be specifically designed to mount in a standard National Electrical Manufacturers Association (NEMA) TS 1, TS 2, 2070 Advance Transportation Controller (ATC), 170 type detector rack using the edge connector to obtain power and provide contact closure outputs. No adapters shall be required to mount the VDP or EM in a standard detector rack. Detector rack rewiring shall not be required.

B. The VDP shall operate satisfactorily in a temperature range from -30 degrees F to 165 degrees F (-35 degrees C to 74 degrees C) and a humidity range from 0 percent relative humidity to 95 percent relative humidity, non-condensing as set forth in NEMA specifications.

C. The VDP and EM shall be powered by 12 or 24 volts direct current (VDC). These modules shall automatically compensate for the different input voltages.

D. The VDP power consumption shall not exceed 300 milliamps at 24 VDC. The EM power consumption shall not exceed 120 milliamps at 24 VDC.

E. The VDP shall include an EIA-232 port for serial communications with a remote computer. The VDP EIA-232 port shall be multi-drop compatible with a 9-pin "D" subminiature connector on the front of the VDP.

F. The VDP shall utilize flash memory technology to enable loading modified or enhanced software through the EIA-232 port without modifying the VDP hardware.

G. The VDP shall include a port for transmitting TS1 and TS2 detections to a traffic controller. The TS1 port shall be a 37 pin female "D" connector on the front of the VDP. The TS2 port shall be a 15 pin female "D" connector on the front of the VDP.

H. The VDP and EM shall include detector output pin-out compatibility with industry standard detector racks.

I. The front of the VDP shall include detection indications, such as Light Emitting Diodes (LEDs), for each channel of detection which display detector outputs in real time when the system is operational.

J. The front of the single and dual VDPs shall include one or two Baynet Neill-Concelman (BNC) video input connectors suitable for RS170 video inputs as required. For 4 channel VDPs, adapter cable that converts a DB15 interface to 4 individual BNC connectors shall be used. The video input shall include a switch selectable 75-ohm or high impedance termination to allow camera video to be routed to other devices, as well as input to the VDP for vehicle detection. A Radio Corporation of America (RCA) type connector/jack for video output shall not be allowed.

K. The front of the VDP shall include one BNC video output providing real time video output that can be routed to other devices. A RCA type connector/jack for video output shall not be allowed.

L. The front panel of the VDP and EM shall have a detector test switch to allow the user to place calls on each channel. The test switch shall be able to place either a constant call or a momentary call depending on the position of the switch.

M. The video inputs to the VDP shall include transient voltage suppression and isolation. Amplification shall assure the one-volt, peak-to-peak video signal integrity is maintained despite video cabling losses and externally induced transients. The amplifier shall have a minimum common mode rejection at 60 Hz of 90 dB.

N. The VDP enclosure shall be bonded to a good earth ground.

5. **Camera.**

A. The video cameras used for traffic detection shall be furnished by the VDP supplier and shall be qualified by the supplier to ensure proper video detection system operation.

B. The camera shall produce a useable video image of the bodies of vehicles under all roadway lighting conditions, regardless of time of day. The minimum range of scene luminance over which the camera shall produce a useable video image shall be the minimum range from night time to day time, but not less than the range 0.1 lux to 10,000 lux.

C. The camera shall be digital signal processor (DSP) based and shall use a charge coupled device (CCD) sensing element and shall output color video with resolution of not less than 470 TV lines. The CCD imager shall have a minimum effective area of 768 (h) x 494 (V) pixels.

D. The camera shall include an electronic shutter control based upon average scene luminance and shall be equipped with an auto-iris lens that operates in tandem with the electronic shutter.

E. The camera shall utilize automatic white balance.

F. The camera electronics shall include a variable focal length lens with variable focus, which can be adjusted to suit the site geometry without opening up the camera housing.

G. The horizontal field of view shall be adjustable from 5.4 to 50.7 degrees. This camera configuration may be used for the majority of detection approaches in order to minimize setup time and spares required by the user. The lens shall be a 10x zoom lens with a focal length of 3.8 mm to 30.0 mm.

H. The lens shall have an auto-focus feature with a manual override to facilitate ease of setup.

I. The camera electronics shall include automatic gain control (AGC) to produce a satisfactory image at night.

J. The camera shall incorporate use of preset positioning which stores zoom and focus positioning information. The camera shall have the capability to recall the previously stored preset upon application of power.

K. The camera shall be housed in a weather tight sealed enclosure. The enclosure shall be made of 6061 anodized aluminum or approved equal. The housing shall be field rotatable to allow proper alignment between the camera and the traveled road surface.

L. The camera enclosure shall be equipped with a sun shield. The sun shield shall include a provision for water diversion to prevent water from flowing in the camera's field of view. The camera enclosure with sun shield shall be less than 6 inches in diameter, less than 18 inches long, and shall weigh less than 6 pounds when the camera and lens are mounted inside the enclosure.

M. The camera enclosure shall include a proportionally controlled heater to assure proper operation of the lens iris at low temperatures and prevent moisture condensation on the optical faceplate of the enclosure.

N. When mounted outdoors in the enclosure, the camera shall operate satisfactorily in a temperature range from -29 degrees F to 140 degrees F (-34 degrees C to 60 degrees C) and a humidity range from 0 percent relative humidity to 100 percent relative humidity.

O. The glass face on the front of the enclosure shall have an anti-reflective coating to minimize light and image reflections. The face shall also employ a special coating to minimize the buildup of environmental debris such as dirt and water.

P. The camera shall be powered by 120 volt alternating current (VAC) 60 Hz. Power consumption shall be less than 45 watts under all conditions.

Q. The camera enclosures shall be equipped with separate, weather-tight connections for power and video cables at the rear of the enclosure to allow diagnostic testing and viewing of video at the camera while the camera is installed on a mast arm or pole. Video and power shall not be connected with the same connector.

R. The video signal shall be fully isolated from the camera enclosure and power cabling.

6. **Cabling.**

A. The coaxial cable between the camera and cabinet shall be a 75 ohm, precision video cable with 20 gauge solid bare copper conductor (9.9 ohms/M), solid polyethylene insulating dielectric, 98 percent (minimum) tinned copper double-braided shield and black polyethylene outer covering. Signal attenuation shall not exceed 0.78 dB per 100 feet at 10 MHZ. Nominal outside diameter shall be 0.304 inches. This cable shall be suitable for installation in conduit or overhead with appropriate span wire. Seventy-five ohm BNC plug connectors should be used at both the Camera and Cabinet ends. The video detection system supplier shall approve the coaxial cable, BNC connector, and crimping tool. Manufacturer instructions must be followed to ensure proper connection.

B. The power cabling shall be 16 American Wire Gauge (AWG) three conductor cable with a minimum outside diameter of 0.325 inches and a maximum diameter of 0.490 inches. The cabling shall comply with the National Electric Code (NEC), as well as local electrical codes.

7. **Warranty.**

A. The Contractor shall provide materials with a manufacturer's warranty/guarantee, transferable to MDOT, that the supplied materials will be free from all defects in materials and workmanship for the stated time period from the date of shipment. The Contractor shall supply the Engineer with any warranty/guarantee documents from the manufacturer and a copy of the invoice showing date of shipment.

This warranty does not apply to products damaged by accident, misuse, abuse, improper operation, service by unauthorized personnel, or unauthorized modification.

(1) During the warranty period, the manufacturer shall repair with new or refurbished materials, or replace at no charge, any product containing a warranty defect, provided the product is returned to the manufacturer's factory or authorized repair site. The product repaired or replaced under warranty by the manufacturer will be returned with transportation paid by the manufacturer.
(2) During the warranty period, technical support shall be available from the manufacturer via telephone within four hours of the time a call is made by a user, and this support shall be available from factory certified personnel or factory certified installers.

(3) During the warranty period, updates to VDP software shall be available from the manufacturer without charge.

c. Construction. The furnishing and installation or removal of the Video Traffic Detection System and/or Camera shall be as indicated on the plans or as directed by the Engineer. All work shall comply with Sections 819 and 820 of the Standard Specifications for Construction, the applicable "typical" signal construction detail, and this Special Provision. Storage and/or disposal of the removed material is included.

1. The video detection system shall be installed as recommended by the manufacturer and documented in installation materials provided by the manufacturer.

2. The Contractor shall not install the camera equipment until all other signal equipment has been installed and inspected for correctness. Premature installations of camera equipment that need to be moved in order to make the system operate shall be moved at the Contractor's cost. This movement shall not be paid for as extra payment or in time extensions. The video processor shall be delivered to the MDOT Statewide Signal shop or the inspecting agency for setup and installation in the controller cabinet.

3. Recommended camera placement shall be a minimum of 33 feet above the roadway, or as indicate on the plans, and placed over the traveled way on which vehicles are to be detected. The camera shall view approaching vehicles at a distance not to exceed 350 feet for reliable detection.

4. Installation or removal of the Video Traffic Detection System shall be as indicated on the plans which include the video system processor, automatic control unit, monitor, amplifiers hardware, cable, connectors, and other material required to complete the work.

5. Installation or removal of the Video Traffic Detection Camera shall be as indicated on the plans which include the video detection camera, enclosure, mounting bracket, hardware, cable, connectors, and other material required to complete the work.

Maintenance and Support.

The manufacturer shall maintain an adequate inventory of parts to support maintenance and repair of the video detection system during the warranty period. These parts shall be available for delivery within 30 days of placement of an acceptable order at the manufacturer's then current pricing and terms of sale for said parts.

The manufacturer shall maintain an ongoing program of technical support for the video detection system during the warranty period. This technical support shall be available via telephone, or via personnel sent to the installation site upon placement of an acceptable order at the manufacturer's then current pricing and terms of sale for on-site technical support services.

d. Measurement and Payment. The completed work as described will be measured and paid for using the following contract items (pay items):

Contract Item (Pay Item)	Pay Unit
Video Traffic Detection Camera	Each
Video Traffic Detection System	Each
Video Traffic Detection System, Rem	Each
Video Traffic Detection Camera, Rem	Each

MICHIGAN
DEPARTMENT OF TRANSPORTATION

SPECIAL PROVISION
F0R
GPS TIME SYNCHRONIZATION MODULE

T&S:DJA 148 of 232 C&T:APPR:RJZ:DBP:06-27-07

a. Description. Furnish all labor, equipment, and material required to install or remove a Global Positioning System (GPS) time synchronization module, with integrated antenna, mounting hardwire, cable, connectors and associated hardware to complete the work. Storage and disposal of materials, when required, is also included in this item.

b. Material. Material shall meet Sections 918 and 921 of the Standard Specifications of Construction and this Special Provision.

1. **General.** The GPS time synchronization module shall provide an accurate time reference system which can be interfaced with individual traffic signal controllers or attached to a central system. The time reference system shall provide a means for better traffic flow and coordination between traffic signal timing plans. Once the satellite lock has been established, the GPS module shall synchronize (sync) the traffic signal controller time to the GPS acquired time at two second intervals and allow for continuous tracking of all visible satellites.

Each assembly shall consist of a GPS module with integrated antenna and appropriate interface hardware to draw power from the traffic signal control cabinet in order to communicate time and date information to the traffic signal controller.

The GPS module shall be a Garmin GPS17HVS type Time Synchronization Module, or approved equal.

2. **Mechanical.** The GPS module shall be housed in an enclosure suitable for installation in outdoor environmental conditions and mounted to a flat surface such as the top of traffic signal controller cabinet or on pole located near the traffic signal control cabinet.

The GPS module shall include an optional mounting bracket that is capable of mounting the module to a 3/4 inch conduit resulting in not more than 4 inches in overall height. The overall weight of the assembly, including optional mounting bracket, shall not exceed 8 ounces without cable.

The GPS module shall be no greater in size than 2 inches high and 4 inches in diameter.

The GPS module shall be manufactured with a minimum of 25 feet of foil shielded number 8 conductor 28 American Wire Gauge (AWG) cable for communications and power.

3. **Electrical.** The GPS module shall operate on 8 to 40 volts direct current (VDC) unregulated at no more than 60 mA. The GPS module receive sensitivity shall be a minimum – 165dBW. The GPS module acquisition time shall not exceed one minute when cold.

The update rate shall be 1 to 900 seconds, programmable in 1 second increments.

4. **Environmental.** The GPS module system shall have an operational temperature range of -34 degrees F to +183 degrees F (-37 degrees C to +84 degrees C).

The GPS module system shall be rated waterproof at 3 foot submersion for 30 minutes.

5 **Interface.** The GPS module shall provide true RS-232 output, asynchronous serial input compatible with RS-232 or TTL voltage levels, RS-232 polarity.

An interface panel with terminal block shall be provided to terminate the cable from the GPS module cable. The interface panel shall be pre-wired with a 6 foot RS-232 cable that connects to the traffic signal controller and a second fused power cable.

6. **Packing and Marking.** Each GPS module shall have a permanent legible marking which shall include the vendor's name, trademark, or other suitable means of identification.

Each GPS module shall be individually packaged in such a manner that it will be accepted by common carriers and there will be no injury or defacement to the sign during transportation to the point of destination. Each package shall be legibly marked with a content description, order number, and vendor's name.

7. **Quality/Warranty.** The Contractor will provide materials with a manufacturer's guarantee/warranty, transferable to the Michigan Department of Transportation (MDOT), that the supplied materials will be free from all defects in materials and workmanship for a specified period from the date of shipment. The Contractor will supply the Engineer with any guarantee/warranty documents from the manufacturer and a copy of the invoice showing date of shipment.

c. Construction. The furnishing and installation or removal of the GPS module shall be as indicated on the plans. All work shall comply with Sections 819 and 820 of the Standard Specifications for Construction, the applicable "typical" construction details, and this special provision. Storage or disposal of the removed material is included and will not be paid for separately, and will be performed as directed by the Engineer and Section 204 of the Standard Specifications for Construction.

d. Measurement and Payment. The completed work as described shall be measured and paid for using the following contract items (pay items):

Contact Item (Pay Item)	**Pay Unit**
GPS Module	Each
GPS Module, Rem	Each

MICHIGAN
DEPARTMENT OF TRANSPORTATION

SPECIAL PROVISION
F0R
SOLAR POWER FLASHING BEACON

T&S:DJA 150 of 232 C&T:APPR:JKG:DBP:05-24-07

a. Description. Furnish all labor, equipment, and material required to install or remove a Solar Power Flashing Beacon assembly which includes solar engine, solar panel, Light Emitting Diode (LED) flashing beacon signal module with housing, mounting hardware, and all associated material required to complete the work. Storage and disposal of materials, when required, is also included in this item. The system shall provide either a 24 hour operation or operate by remote activation and conform to all provisions of the current *Michigan Manual on Uniform Traffic Control Devices* (MMUTCD).

b. Material. Material shall meet Sections 918 and 921 of the Standard Specifications of Construction and this Special Provision.

1. **Mechanical Requirements.** The solar engine shall be no greater than 4 3/4 inches x 15 inches x 15 inches in size and be constructed from powder coated aluminum. The single solar panel shall be integrated to the solar engine with all batteries and electronics mounted in the solar engine with an aluminum flashing. No external control or battery cabinet will be required. The solar engine shall be vented to provide cooling of the battery and electronic system. Venting shall be covered by wire mesh to prevent intrusion of insects.

The overall weight of the Solar Power Flashing Beacon assembly, including mounting hardware, signal housing, LED module, and solar engine shall not exceed 43 pounds.

The solar engine shall have the capability to mount an external device (antenna) for remote activation and have the capability to power such device. The solar engine shall contain sufficient space to house a third party device inside a sealed enclosure located inside the solar engine.

The system shall be a Carmanah R247C, Single Beacon, Solar Flashing Beacon, or approved equal.

2. **Operational Requirements.** The system shall conform to all standards for flashing beacons as required in the current MMUTCD.

The solar beacon shall flash at a rate of not less than 50 or more than 60 times per minute. The illuminated period of each flash shall not be less than one-half and not more than two-thirds of the total cycle.

The solar beacon shall have a night dimming feature, a minimum operating autonomy of 30 days, and automatically reduce light output in case of low battery situations reducing the risk the beacons will fail entirely under conditions of poor solar insulation.

The solar beacon shall operate continuously (24 hour operation) when the battery is connected. The solar beacon shall have the option to be activated by a third party switch or third party devices with compatible wireless contact closure type radio output.

3. **Environmental Requirements.** The system shall have an operational temperature range of -40 degrees F to +122 degrees F.

The system shall be designed and constructed to withstand 110 mph wind loads in conformance with the requirements of the American Association of State Highway and Transportation Officials (AASHTO) publication, *Standard Specifications for Structural Supports of Highway Signs, Luminaires and Traffic Signals*, 4th Edition 2001.

The electronic circuit board housing, wire harnessing, and connectors shall be designed and tested in accordance to International Electrotechnical Commission (IEC) Standard 60529, Ingress Protection IP67 requiring the enclosure be dust tight and remain completely sealed when immersed in water to a depth of three feet for 1 hour.

The LED Module shall meet the following environmental tests as specified in the Institute of Transportation Engineers (ITE) Vehicle Traffic Control Signal Heads, Light Emitting Diode (LED) Circular Signal Supplement:

Mechanical vibration: MIL-STD-883
Temperature cycling: MIL-STD-883
Moisture resistance: MIL-STD-810F

4. **Solar/Battery System.** The solar engine shall include one 10-watt solar panel no larger than the footprint of the housing and shall house a single, field-replaceable, sealed lead acid battery no greater than 24 Ah.

The solar panel shall meet the design qualification and type approval of photovoltaic modules in accordance with IEC 61215. This specification includes radiation testing, thermal testing, and mechanical testing for environmental conditions such as UV-exposure, thermal cycling, as well as degradation of maximum power output.

The solar panel and battery system shall be 12 volts direct current (VDC).

System shall have an auxiliary 12 VDC power output to power third party devices such as wireless contact closure type radios or sensing equipment.

The integrated solar charger shall be approved to Underwriters Laboratories Incorporated (UL) standards.

Battery shall be mechanically secured into the housing. Battery bracket shall enclose the battery in a manner to restrict the thermal expansion of the battery.

5. **LED Signal Module/Housing.** The LED signal module shall conform to the mandatory specifications of: ITE Vehicle Traffic Control Signal Heads (VTCSH), Light Emitting Diode (LED) Circular Signal Supplement as required by the MUTCD 2003 Edition, Revision 1.

The LED signal housing shall meet the equipment standard of the ITE Vehicle Traffic Control Signal Heads (VTCSH) Chapter 2.

The Solar Power Flashing Beacon Assembly shall be coated with a semi-gloss yellow enamel. The color shall match the central color within the limits shown on FHWA Highway Yellow Tolerance Chart, except the color shall not be darker than the central color.

6. **Quality/Warranty.** The product must be Federal Communications Commission (FCC) certified to comply with all 47 CFR FCC Part 15 Subpart B Emission requirements.

The Contractor will provide materials with a manufacturer's guarantee/warranty, transferable to the Michigan Department of Transportation (MDOT), that the supplied materials will be free from all defects in materials and workmanship for a specified period from the date of shipment. The Contractor will supply the Engineer with any guarantee/warranty documents from the manufacturer and a copy of the invoice showing date of shipment.

c. Construction. The furnishing and installation or removal of the Solar Power Flashing Beacon shall be as indicated on the plans. All work shall comply with Sections 819 and 820 of the Standard Specifications for Construction, the applicable "typical" construction details, and this special provision. Storage or disposal of the removed material is included and will not be paid for separately, and will be performed as directed by the Engineer and Section 204 of the Standard Specifications for Construction.

1. **Mounting.** The entire Solar Power Flashing Beacon assembly shall be mounted at one point. The assembly, including solar engine, signal housing and LED module, and bracket shall be provided with hardware for mounting on to the top of either 2 inch square perforated tubing or 2 3/8 inch diameter round sign post. A separate mounting for the signal head or any other component shall not be required.

The solar engine shall have the capability to be tilted and oriented south with additional mounting hardware, or mounted completely flat to the ground such that mounting in any orientation will keep the solar engine level.

The signal head shall be mounted directly below the solar engine. The solar engine shall not overhang the signal head, so as not to restrict mounting a signal head back plate. The signal head shall be easily removable from the assembly. The bracket assembly shall be constructed such that the signal head can be removed easily in the field without removing the solar engine. The bracket assembly shall be designed to take the torsion and bending load of the solar engine. The signal head shall not be subjected to the torsional or bending load of the solar engine

The signal housing must be able to rotate independent from the bracket for lens alignment.

2. **Delivery.** The entire system shall be delivered as a complete unit ready to install and requiring no assembly.

d. Measurement and Payment. The completed work as described shall be measured and paid for using the following contract items (pay items):

Contact Item (Pay Item)	**Pay Unit**
Flsh Beacon, Solar Power	Each
Flsh Beacon, Solar Power, Rem	Each

MICHIGAN
DEPARTMENT OF TRANSPORTATION

SPECIAL PROVISION
FOR
SPLICE BOX

T&S:DJA 153 of 232 C&T:APPR:JJG:JKG:06-30-06

a. Description. Furnish all labor, equipment, and material to either install or remove a Splice Box including enclosure, hardware, and any associated material necessary to complete the work. The splice box shall meet the following specifications and be able to accommodate the necessary wiring for two approaches of traffic signals, pedestrian signals, and pedestrian pushbuttons.

b. Materials. Material shall meet Sections 918 and 921 of the Standard Specifications for Construction.

1. Enclosure. The enclosure shall be manufactured from 0.125 inch thickness, ASTM 5052-H32 aluminum, and shall include a drip shield to protect moisture from entering the enclosure when the door is open. The enclosure shall be 18 inches wide, 18 inches high, and 8 inches deep.

   Four standoffs shall be mounted on inside of enclosure for a back-panel mounting. There shall be an opening at the bottom of the enclosure, near the ground bar, to accept a #6 ground wire. There shall be holes, predrilled at the top and bottom on the back of the enclosure to accept two cabinet mounting brackets.

   The enclosure shall be provided with two (2) cabinet mounting brackets for mounting to wood or steel poles. It shall not be necessary to remove the back-panel to attach the cabinet mounting brackets.

   The inside of the enclosure shall be painted white. The exterior of the enclosure shall be finished with a durable and weather-resistant protective coating having a total dry film thickness of not less than 1.5 mils. The final coat shall be aluminum in color and a minimum 0.75 mil thickness.

2. Door. The enclosure door shall be provided with a lock and two (2) keys (Corbin Type Blank 04266 or equivalent). The door shall be equipped with a weather tight seal: 3/16 inch x 5/8 inch neoprene sponge rubber gasket. The door shall be provided with a stainless steel continuous hinge.

   The inside of the door shall be provided with a hook welded to the door to accommodate a 9 inch x 12 inch plastic job holder. The job holder shall be provided with metal reinforcing hole(s). The plastic job holder shall be ULINE S-2761BL or equivalent.

3. Back Panel. There shall be three (3) 16-position compression terminal blocks to fit a quantity of six (6) #14 AWG wires for signal wire termination. There shall be permanent labels adjacent to both sides of the terminal blocks identifying the terminal block connections.

   There shall be one (1) six position compression terminal block for pedestrian push button termination. The terminal blocks shall be rated for a minimum 30 amperes, 300 volts, with

3/16-1/4 inch hex head or screw head screws. The screws shall not compress directly on the wires.

There shall be one 13-position neutral buss bar.

There shall be one 13-position chassis ground buss bar designed to accommodate a #6 ground wire. All components on the back-panel shall be permanently identified.

4. Shop Drawings. Two copies of detailed shop drawings and material lists shall be furnished along with a sample, if requested, prior to work commencing. There shall be two (2) wiring diagrams provided with each splice box. The wiring diagrams shall identify the component layout and shall allow space for the technician to write in the field connections. The wiring diagram shall be on 32 lb paper, with 96 brightness Hammermill Laser Print paper or approved equal.

c. Construction. The Splice Box shall be installed, wired, and mounted at locations as shown on the plans. All work shall comply with Sections 819 and 820 of the Standard Specifications for Construction and this Special Provision.

Splice Box removal includes the enclosure, hardware, and all associated materials necessary to perform a complete removal. Storage or disposal of the removed material will be done as directed by the Engineer or as indicated on the plans. All work shall comply with Section 204 of the Standard Specifications for Construction.

d. Measurement and Payment. The completed work as measured will be paid for at the contract unit price for following contract items (pay items):

Contract Item (Pay Item)	Pay Unit
Splice Box	Each
Splice Box, Rem	Each

The contract unit price each for **Splice Box** shall be payment in full for furnishing all labor, equipment, and material required to install a **Splice Box** on the steel or wood pole including all necessary hardware, conduit risers, fittings, grounding, ground wiring connections, and any other material required to complete the work, as specified herein and as shown on the plans.

The contract unit price each for **Splice Box, Rem** shall be payment in full for furnishing all labor, equipment, and material to remove the enclosure, hardware, and associated materials to complete the work. Storage or disposal of material is also included in the item.

MICHIGAN
DEPARTMENT OF TRANSPORATION

SPECIAL PROVISION
FOR
TRAFFIC SIGNAL UNINTERRUPTIBLE POWER SYSTEM

T&S:DJA 155 of 232 C&T:APPR:JKG:DBP:12-13-06

a. Description. Furnish all labor, equipment, and material required to install or remove an on-line, power conditioner and uninterruptible power system (UPS) with battery backup capability designed for transportation and traffic applications including mounting brackets, hardware, fittings, cable, connectors, grounding, and other material necessary to complete the work. The UPS shall be a microprocessor controlled and software driven power system, and be compatible for installation within traffic signal controller cabinet environments. The UPS includes an inverter which shall be in operation at all times supplying clean regulated power (both voltage and frequency) to all loads at all times, be fully power factor corrected, and fully functional with any type of auxiliary power generator.

b. Materials. Material shall meet Sections 918 and 921 of the Standard Specifications for Construction and the requirements of this Special Provision.

1. **Operation**

A. The UPS shall be capable of producing, simultaneously, fully regenerated and regulated conditioned true sine-wave power with continuous and hot standby alternating current (AC) output capability.

B. The UPS inverter shall be on at all times to produce continuous, clean, regulated power to all loads and have a minimum operating efficiency of 92 percent. The continuous power output shall be provided for signals, controllers and modems, etc.; standby output can also be provided for signals if so required. Up to the maximum load rating, the UPS shall be capable of supplying power to any combination of signal heads, whether Incandescent, Light Emitting Diode (LED), or Neon, by any manufacturer, regardless of power factor, without overdriving the LED heads which may cause early degradation, low luminosity, or early signal failure. A programmable digital delay timer shall be provided for short-term battery run under full cycling operation.

C. Upon loss of utility power, the UPS shall utilize battery power in support of the system via a supplied Power Interface Module (PIM). In normal operation, the UPS shall be operated in the real-time true on-line mode with the inverter supplying power to all cabinet loads, at all times. The UPS shall be capable of being operated in hot standby mode with power transfer being accomplished in 100 milliseconds or less, if required. In the event of UPS failure and/or battery depletion, the PIM shall ensure the UPS will drop out and, upon return of utility power the traffic control system default to normal operating mode.

D. The PIM shall enable removal and replacement of the UPS without shutting down the traffic control system (i.e., “hot swap” capability). Connectors shall be equipped with a “safety interlock” feature.

E. For 170 type cabinets, upon loss of power, the UPS shall actuate the existing Flash Transfer Relays (FTRs) and Mercury Contractor (MC) to force the traffic control system into Flash Mode operation.

F. Existing Flasher Modules and FTRs shall be utilized.

G. The UPS shall be fully compatible with police panel functions (i.e., “signals OFF” switch must kill power to the field wiring even when on UPS/Battery power), to facilitate emergency crews and police activities.

H. The UPS shall not duplicate or take over flash operation or flash transfer relay functions, shall be capable of providing continuous, fully conditioned, regulated pure sinusoidal AC power to all connected devices such as signal controllers, modems, communications hubs, National Transportation Communications for Intelligent Transportation Systems (ITS) Protocal (NTCIP) adapters and video equipment at all times.

I. The UPS shall be NTCIP capable with optional standard adapter and contain two external serial ports located on the front panel (rear panel for 170 applications) of the UPS. The Signal serial port shall provide the user the option to select alarm output functions. These functions shall be open collector type contact closures the user can assign as signal utility interrupt, low battery and inverter active conditions, or utility fail indicate. These signals shall be capable of being interfaced to any manufacturer’s controller auxiliary alarm inputs or the PIM. The RS232 Signal port shall provide an intelligent interface for connection to optional software systems for monitoring and control, including inter-net connections.

J. The UPS shall be fully power factor corrected under all operating conditions.

K. The UPS shall be provided with a Compact Disk Read Only Memory (CD ROM) containing Windows based configuration software.

2. **Components.** The UPS shall consist of three major components, the Electronics Module with a detachable PIM, and the Battery System.

A. The Electronics Module shall consist of the following:

(1) True on-line, double conversion, pure sine-wave, high frequency inverter utilizing Insulated Gate Bipolar Transistor (IGBT) technology.

(2) Three-stage, temperature compensated, battery charger.

(3) Digital microprocessor based timer for programmable flash command requirements.

(4) For connection from the Electronics Module to the PIM and Battery System, dedicated harnesses shall be provided with quick-release, keyed, circular connectors, and braided nylon sleeving over all conductions.

(5) Local individual LED indicators for AC input, inverter, summary alarm, UPS output, battery status, load levels, with Liquid Crystal Display (LCD) panels for battery run time, and event counters.

(6) Local and remote communications capabilities.

(7) A detachable PIM for inserting power safely and reliably.

(8) Be capable of accepting an NTCIP-ready adapter or a Spread Spectrum Radio modem.

(9) Two separate DB9F connectors for remote signal alarms and true RS232 monitoring and remote communications.

B. Mounting/Configuration shall be of a Universal Design.

(1) National Electrical Manufacturers Association (NEMA) Style: mounting method shall be shelf-mount or Wall-mount.

(2) 170 Style: mounting method shall be 19 inch rack-mount.

C. Power Interface Module (PIM)

(1) The PIM shall be required to safely insert utility power into the UPS.

(2) The PIM shall contain a terminal strip for input and output power connections in addition to neutral and ground connections. The terminal strip shall also include open collector (relay type) connections for on battery, low battery, and digital flash timer.

(a) The PIM shall include two serial ports with connection to the digital timer. When the serial port on the UPS is connected to the signal serial port on the PIM, loss of utility power shall activate the digital timer. The digital timer shall switch the signal operation from full colors to flash based on flash trigger values.

(b) The signal serial port on the PIM can be used to send open collector type contact closures the user can assign as signal utility interrupt, low battery, and inverter active conditions to the signal controller auxiliary alarm inputs.

(c) Optional PIM models shall be available for connection to auxiliary power generators and to provide a ground fault interrupter (GFI) outlet.

D. Battery System

(1) The battery system shall be comprised of extreme temperature, deep cycle, Absorbed Glass Mat/Valve Regulated Lead Acid (AGM/VRLA) batteries that have been field proven and tested by the US military.

(2) The battery system shall consist of a single string of 6 (1250VA) or 8 (2000VA) batteries for extreme temperature, deep cycle, AGM/VRLA type batteries.

(3) Batteries shall be certified to operate at extreme temperatures -40°F (-40°C) to 165°F (74°C) and shall not require aid of any external devices to cool or heat the batteries.

(4) Batteries shall be provided with keyed interconnect wiring harness. This harness shall connect the battery pack to the UPS module and be a minimum of five feet in length.

(5) The interconnect cable shall be protected with abrasion-resistant nylon sheathing and connect to the base module via a quick-release circular connector.

(6) The circular battery connector shall have interlocking pins to prevent turn-on if batteries are not connected, and to shut off the UPS should the batteries be disconnected.

(7) Battery construction shall include heavy-duty, inter-cell connections for low-impedance between cells, and heavy-duty plates to withstand shock and vibration.

(8) The top cover shall use tongue and groove construction and shall be epoxied to the battery case for maximum strength and durability.

(9) An optional external, stand-alone pad or pole mounted, outdoor enclosure shall be available should there be inadequate room in the signal cabinet or should the engineer prefer independent, external mounting.

3. **Electrical Specifications**

A. Input Voltage

Nominal Input Voltage	120 VAC, Single Phase
DC Battery Buss	72VDC-125VA or 96VDC-2000VA
Input Voltage Range	85 VAC to 140 VAC
Input Frequency	50 or 60 Hz (± 5 percent)
Input Configuration	3 Wire (Hot, Neutral, Ground)
Input Current (Max. draw)	7.2 amps, PFC-1250VA or 14.6 amps, PFC-2000VA
Input Protection	Input Fuse (20 amps)

B. Output Specification

Nominal Output Voltage	120VAC, Single Phase
Power Rating	1250VA/825W or 1250VA/825W with (10 sec) 2000VA/1400W or 2000VA/1400W continuous
Output Voltage Regulation	± 2 percent for 100 percent step load change and from High battery to Low battery condition
Output Frequency	50 or 60 Hz (± 5 percent)
Output Configuration	Keyed, circular connectors and duplex receptacle
Output Wave Form	True Sinewave
Overload capability	110 percent for 10 minutes 200 percent for ½ second

Fault clearing	Current limit and automatic shutdown
Short circuit protection	Current limit and automatic shutdown
Efficiency	92 percent at full load
Load Power Factor	0.7 lagging through unity to 0.7 leading

4. **Physical Specifications**, UPS Electronics Module shall be no greater than:

   Rack, Shelf and Wall Mount: Width = 19”, Depth = 13”, Height = 3.5”
   Detachable Power-Interface Module = Width = 6”, Depth = 2.8”, Height = 9”
   Weight: UPS: 20 lbs. or less, Shipping weight: 25 lbs. or less

5. **Environmental Specification**

   A. The UPS system, including batteries, shall meet or exceed NEMA temperature standards from -40 ℉ (-40 ℃) to 165 ℉ (74 ℃).

   B. The UPS system, including batteries, shall be certified and field proven to meet or exceed NEMA temperature standards. A certificate of compliance, from an independent testing facility, shall be made available upon request.

6. **Battery Specifications**

   A. Batteries shall be the 41 Ampere-Hour rating type.

   B. Batteries shall meet MIL SPEC B-8565J for hydrogen gas emissions.

7. **Communication, Controls, and Diagnostics**

   A. Alarm function monitoring through the UPS shall be through a standard DB-9F connector with open collectors (40V@20mA) indicating:

      (1) Loss of utility power

      (2) Inverter failure

      (3) Low battery

   B. An RS232 interface shall be provided via a DB-9F connector to allow full interactive remote computer monitoring and control of the UPS function.

   C. Front panel controls shall consist of no less than: Power On, Cold direct current (DC) Start, Alarm Silence, Battery Test, Bypass Breaker, and DC/Battery Breaker.

   D. There shall be the ability to program the UPS through a front panel keypad.

8. **Reliability**

   A. Calculated Mean Time Between Failures (MTBF) is 100,000 hours based on component ratings.

B. When Bypass and PIM are included, system MTBF increases to 150,000 hours.

9. **Options**

A. UPS-Link, Internally mounted Simple Transportation Management Protocol (STMP) / NTCIP adaptor.

B. Extended run times via additional batteries.

C. Battery tray for 170 type cabinets shall hold a maximum of 4 batteries and mount on Radio Electronics Television Manufacturers Association (RETMA) rails.

D. Swing-out battery box, capable of being mounted on right inside rail behind back door of 170 type cabinets, shall hold a maximum of 6 batteries.

E. Service pedestal or cabinet mount.

F. High rate battery charger for accelerated charging capacity for multiple battery strings.

10. **Serviceability and Maintainability**

A. Mean-Time-To-Replace or Repair (MTTR)

(1) Electronics: 15 minutes or less

(2) Battery System: 15 minutes or less

11. **Warranty**. The Contractor shall provide materials with a manufacturer's warranty/guarantee, transferable to MDOT, that the supplied materials will be free from all defects in materials and workmanship for the stated time period from the date of shipment. The Contractor shall supply the Engineer with any warranty/guarantee documents from the manufacturer and a copy of the invoice showing date of shipment.

c. Construction. The furnishing and installation of the Traffic Signal UPS shall be as indicated on the plans. All work shall comply with Sections 819 and 820 of the Standard Specifications for Construction, applicable "typical" signal construction detail(s), and this Special Provision.

Traffic Signal Uninterruptible Power System Removal includes the Electronics Module, PIM, Battery System, mounting brackets, hardware, fittings, cable, connectors, grounding, and all associated materials required to complete the work. Storage and disposal of the removed material shall be performed as directed by the Engineer and Section 204 of the Standard Specifications for Construction. All work shall comply with Sections 204, 819, and 820 of the Standard Specifications for Construction.

d. Measurement and Payment. The completed work as described will be measured and paid for using the following contract items (pay items):

Contract Items (Pay Items)	**Pay Unit**
TS Uninterruptible Power System	Each
TS Uninterruptible Power System, Rem	Each

MICHIGAN
DEPARTMENT OF TRANSPORTATION

SPECIAL PROVISION
FOR
WIRELESS INTERCONNECT FOR SIGN MOUNTED FLASHER

T&S:DJA 161 of 232 C&T:APPR:JKG:DBP:05-31-07

a. Description. Furnish all labor, equipment, and material required to install or remove a Wireless Interconnect to operate advance warning sign optical flashing beacons at a location as indicated on the plans. This includes an equipment box/cabinet enclosure, contact closure type radio, processor, power supply, mounting brackets, antenna, hardware assembly, fittings, cable, connectors, and other material required to complete the work. Storage and disposal of material is included in the item and will not be paid for separately.

b. Materials. Material shall meet Sections 918 and 921 of the Standard Specifications for Construction and this Special Provision.

1. **Wireless Contact Closure Type Radio.**

   A. Shall operate as a Master, Repeater, or Remote unit, equivalent to the ENCOM, COMMPAK I/O 8 900 mega-hertz (MH_z) type radio.

   B. Shall operate in the license-free, Spread Spectrum band (902-928 MH_z), utilizing Frequency Hopping technology.

   C. Shall utilize 139 user-selectable channels, with 62 available hopping sequences (two shall be non-overlapping).

   D. Shall be completely configurable via included ControlPak type software, or approved equal. Units currently in the field (manufactured by ENCOM Inc.) must be compatible with the wireless systems.

   E. Shall have software features providing:

      (1) Remote programming

      (2) Remote configuration

      (3) Spectrum analyzer

      (4) Radio link diagnostics

   F. Shall provide bi-directional communications for confirmation.

   G. Shall have software configurable Input/Output (I/O) Data Mapping.

   H. Shall be programmable for radio frequency output levels of 1 mW, 10 mW, 100 mW, or 1 Watt.

I. Shall have 8 inputs which can be ground activated or “true” activated from 0 to 24 volts direct current (VDC).

J. Shall have 8 outputs (open collector):

(1) Outputs must have software programmable timers

(2) Outputs must be capable of providing flash functionality

K. Shall provide a maximum of 8 ms end to end latency.

L. Shall have the following Light Emitting Diode (LED) indicators:

(1) Power (PWR)

(2) Radio Frequency (RF) Link Status

(3) Input Channel Activity (8)

(4) Output Channel Activity (8)

M. Shall have an operating temperature of -30 degrees F to 165 degrees F (-35 degrees C to 74 degrees C).

N. Shall operate with voltages between 6 VDC and 30 VDC, with a typical current draw of less than 100 milli-amps.

O. Shall have a receiver sensitivity of better than 110 decibel (dB) m at 10^{-6} BER.

P. Shall have a maximum size of 1 3/4 inches (height) x 4 3/4 inches (depth) and 3 3/4 inches (width).

2. **Master-Repeater-Remote Equipment Requirements (permanent power required)**

A. The **Master** unit shall include an equipment box enclosure equipped with the radio, pushbutton activation, and associated equipment to be located as indicated on the plans or as directed by the Engineer. Also included is a 7 dB Omni Antenna, or either one or two 10 dB Yagi Antennas (specified for the frequency range of the radio), as indicated on the plans. The Contractor shall supply the unit, equipment box enclosure with external pushbutton activation and confirmation lights, when the equipment box is to be located outside of the highway right-of-way (i.e. school or fire station applications) which shall be installed inside the building by appropriate local forces.

(1) **Equipment Box.** A flasher controller equipment box enclosure shall be used for intersection overhead flashing beacon installations (with dual displays, illuminated case sign), advance warning sign flashing beacon installations (school or fire station type with radio assemblies), or other applications where the conduit feed into the cabinet is greater than two inches (three inches typical).

The equipment box enclosure shall have the nominal dimensions of 16 inches high, 14 inches wide and 12 inches deep and be manufactured from 1/8 inch thick aluminum meeting American Society for Testing Material (ASTM) 5052-H32 or approved equal. The equipment box shall have a nominal 1/2 inch lip formed on the opening to allow the equipment box door gasket to seal out dust and moisture. The equipment box enclosure shall have four standoffs mounted on the inside to accommodate a back-panel.

(2) **Painting.** The inside of the enclosure shall be painted white. The exterior shall be finished with a durable and weather-resistant protective coating having a total dry film thickness of not less than 1.5 mils. The final coating shall be aluminum in color having a total dry film thickness of not less than 0.75 mils.

(3) **Door.** The door shall be equipped with a weather tight seal consisting of a neoprene sponge rubber type gasket approximately 5/8 inches wide by 3/16 inches deep. The door shall include a heavy duty stainless steel continuous hinge, be provided with a lock and lock cover to prevent dust and moisture from entering the lock assembly, and two Corbin Type Blank 04266 type keys or approved equal.

(4) **Back-Panel.** The back-panel shall be aluminum 1/8 inches thick and have nominal dimensions of 15 inches wide and 11 1/2 inches wide. The back-panel shall be attached to the standoffs with four 1/2 inch, 10-32 stainless steel Allen head screws and four lock washers. The panel shall not have any other holes drilled except those necessary to attach the panel to the standoffs.

B. The **Repeater** unit shall include a 7 dB Omni Antenna (specified for the frequency range of the radio), an EL-240 type cabinet, or approved equal, equipped with the radio and associated equipment mounted to either a wood or steel pole, as indicated on the plans.

C. The **Remote** unit shall include a 10 dB Yagi Antenna (specified for the frequency range of the radio), an EL-240 type cabinet, or approved equal, equipped with the radio and associated equipment mounted to either a wood or steel pole, as indicated on the plans.

D. Connection hardware shall include TC-400-NMH Type N Male Connectors, or approved equal, fastened at the ends of the LMR 400 dB Cable for connection to both polyphaser and antenna.

3. **Master-Repeater-Remote Equipment Requirements (solar power).**

A. The **Master** unit shall include a rubberized plastic coated Omni Antenna (specified for the frequency range of the radio), a solar assembly housing equipped with the radio and associated equipment, a solar engine/battery system (with one 10-watt solar panel no larger than the footprint of the housing including a single, field-replaceable, sealed lead acid battery) mounted to either a wood or steel pole, as indicated on the plans. The solar engine shall have the capability to be tilted and oriented south with associated mounting hardware. An equipment box or an EL-240 type cabinet, or approved equal, with a keyed entrance, shall include an internal pushbutton activation and associated equipment, and shall be mounted to a pole or pedestal located adjacent to the pedestrian crosswalk as indicated on the plans.

B. The **Repeater** unit shall include a rubberized plastic coated Omni Antenna (specified for the frequency range of the radio), a solar assembly housing equipped with the radio and

associated equipment, a solar engine/battery system (with one 10-watt solar panel no larger than the footprint of the housing including a single, field-replaceable, sealed lead acid battery) mounted to either a wood or steel pole, as indicated on the plans. The solar engine shall have the capability to be tilted and oriented south with associated mounting hardware.

C. The **Remote** unit shall include a rubberized plastic coated Omni Antenna (specified for the frequency range of the radio), the radio and associated equipment mounted in the Solar Power Flashing Beacon Assembly, as indicated on the plans. The solar engine shall have the capability to be tilted and oriented south with associated mounting hardware.

4**. Documentation.** Complete instructions for hardware installation, programming, and system operation shall be included.

5**. Warranty.** The contractor shall provide materials with a manufacturer's warranty/guarantee, transferable to MDOT, that the supplied materials will be free from all defects in materials and workmanship for the stated time period from the date of shipment. The Contractor shall supply the Engineer with any warranty/guarantee documents from the manufacturer and a copy of the invoice showing date of shipment.

c. Construction. The furnishing and installation of the Wireless Interconnect for Sign Mounted Flasher shall be as indicated on the plans. All work shall comply with Sections 819 and 820 of the Standard Specifications for Construction, the applicable "typical" signal construction detail(s), and this Special Provision.

Remove the Wireless Intercn, Sign Mtd Flasher, as indicated on the plans, shall include the enclosure housing, wireless contact closure radio, processor, power supply, antennas, hardware, cable connectors, and other material required to complete the work. Storage or disposal of the removed material will be performed as directed by the Engineer and Section 204 of the Standard Specifications for Construction.

d. Measurement and Payment. The completed work as described will be measured and paid for using the following contract items (pay items):

Contract Item (Pay Item)	**Pay Unit**
Wireless Intercn, Sign Mtd Flasher, Master	Each
Wireless Intercn, Sign Mtd Flasher, Repeater	Each
Wireless Intercn, Sign Mtd Flasher, Remote	Each
Wireless Intercn, Sign Mtd Flasher, Solar Power, Master	Each
Wireless Intercn, Sign Mtd Flasher, Solar Power, Repeater	Each
Wireless Intercn, Sign Mtd Flasher, Solar Power, Remote	Each
Wireless Intercn, Sign Mtd Flasher, Rem	Each

MICHIGAN
DEPARTMENT OF TRANSPORTATION

SPECIAL PROVISION
FOR
LIGHT EMITTING DIODE (LED) COUNTDOWN PEDESTRIAN TRAFFIC SIGNALS

T&S:DJA 165 of 232 C&T:APPR:JKG:DBP:01-18-07

a. Description. Furnish all labor, equipment, and material to install Light Emitting Diode (LED) Countdown Pedestrian Traffic Signals in a traffic signal installation. This includes the LED countdown pedestrian traffic signal modules, hardware, fittings, conduit, riser(s), grounding and ground rod(s), cable, and any other materials necessary to complete the work. The LED Countdown Modules must meet the Institute of Transportation Engineers (ITE) LED Purchase Specifications of the Pedestrian Traffic Control Signal Indications (PTCSI) Part 2: LED Pedestrian Traffic Signal Modules adopted March 2004; hereafter, referred to as LED Performance Specifications.

b. Materials. Material shall meet Sections 918 and 921 of the Standard Specifications for Construction.

General Requirements: LED countdown pedestrian signal modules shall be capable of exhibiting two seven segment digital numerical digits on how much time remains to clear the intersection, as well as the traditional graphic display of LED Hand/Walking Person symbolic legends. The ITE specified symbolic full icon “Hand” or “Walking Person” shall be displayed using a one-piece section which includes a nominal message-bearing surface size of 16 inches x 16 inches.

The LED countdown signal shall achieve the minimum intensity requirements of the ITE photometric test criteria as described in the LED Performance Specifications. If required, the manufacturer shall provide independent lab test results certifying the LEDs meet the ITE specification for LED signals.

2. **Physical and Mechanical Requirements**:

A. General:

(1) Each LED countdown module shall be a self-contained unit.

(2) The assembly and manufacturer’s process for the LED countdown assembly shall be designed to assure all internal LED and electronic components are adequately supported to withstand mechanical shock and vibration. The LED signal manufacturer shall be ISO 9001 certified.

(3) The LED countdown signal module shall be protected against dust and moisture intrusion per the requirements of MIL-810F procedure I Rain and Blowing Rain to protect all internal LED, electronic, and electrical components. The test is to be conducted on a stand-alone unit with no protective housing required.

(4) The LED countdown signal module lens shall be made from ultraviolet stabilized

polycarbonate. The lens shall be tinted or shall use transparency film or materials with similar characteristics. If requested, on a non-fused polymeric lens, a surface coating or a film shall be used to provide front surface abrasion resistance.

(5) The external lens surface for all pedestrian signals shall be smooth, with no raised features, to minimize the collection of dirt, soil, diesel smoke, and other particulate contaminates, and to facilitate periodic cleaning.

(6) Each LED countdown signal module shall be identified with the manufacturer's name, model number, serial number on the outside of the unit, rated voltage, and power consumption. The identification tag shall be visible without disassembly of the signal module.

(7) Each LED countdown signal module shall have a prominent and permanent vertical indication for proper orientation inside a pedestrian signal housing.

B. LED Assembly:

(1) The LED countdown assembly shall consist of an LED array mounted to a printed circuit board and sealed in a polycarbonate cover assembly. The cover assembly shall be secured to a polycarbonate clear matte signal lens.

(2) The assembly shall have #18 American Wire Gauge (AWG), anti-capillary wires, 39 inches long, color-coded leads, conforming to the *National Electric Code* (NEC), with insulated spade lug terminals provided for attachment to the signal terminal block.

(3) Screw in type products will not be allowed for pedestrian signals.

(4) Units that are not enclosed which expose circuit boards with LEDs will not be allowed.

C. LED Array:

(1) The LED array shall consist of a highly visible full icon symbol of the "Hand" and "Walking Person". The "Hand" symbol shall be a minimum of 11 inches tall and consist of Portland Orange LEDs. The "Walking Person" shall be a minimum of 11 inches tall and consist of approximately Lunar white LEDs. The symbols shall be no less than 6.5 inches wide. The countdown digits shall be a minimum of nine inches tall and consist of two rows of Portland Orange LEDs. All wires shall be #18 AWG or larger with thermoplastic insulation.

(2) The orange LEDs shall be Aluminum Indium Gallium Phosphate (Al In Ga P), 605nm (Portland Orange, T 1). The white LEDs shall utilize the latest technology Indium Gallium Nitride technology (In Ga N, T 1).

(3) For a minimum period of 60 months, the maintained minimum luminance value shall not be less than 2,200 cd/m^2 surface brightness for the "Walking Person" icon and not less than 1,400 cd/m^2 surface brightness for the "Hand" icon and the countdown digits. The individual LED light sources shall be interconnected so that a catastrophic failure of a single LED will result in a total loss of not more than three LEDs or five percent of the signal light output.

D. Housing:

(1) The housing of each section shall be a one-piece black polycarbonate resin material with front, sides, top, and bottom integrally molded. The housing shall be of substantial thickness, with a minimum thickness of 3/32 inch, and shall be ribbed to produce the strongest possible assembly, consistent with being lightweight. Two sets of internal bosses shall be provided in the section for horizontal mounting of terminal strip facilities. The terminal blocks shall be attached to bosses with two self-tapping stainless steel screws.

(2) Each signal section shall have a 2-inch diameter round hole in the top and bottom to accept a 1-½ inch supporting pipe. After the sections are assembled, it shall be possible to pass a 1-inch cable through the head without damage or excessive labor.

(3) The door latch shall be a variable pressure type, bolt and wing nut American Iron and Steel Institute (AISI) 300 series stainless steel, or approved equal.

(4) All screws, nuts, bolts, hinge pins, springs, or other hardware wholly or partially exposed on the exterior of the housing shall be AISI 300 series stainless steel. All such parts on the interior of the housing shall be made of corrosion-resistant metal such as stainless steel, aluminum alloy, brass, or bronze.

E. Visors:

(1) The visor shall be 6 3/4 inches long. The visor shall enclose the top and two sides of the lens. The visor shall be made of black polycarbonate resin having a thickness of no less than 0.070 inches, and shall be attached to the door with at least four screws (AISI 300 series stainless steel). The visor mounting shall be of sufficient strength and design to allow the head to be handled by the visor.

(2) LED countdown pedestrian signals shall be shipped with visors attached.

F. Exterior Finish:

(1) LED countdown pedestrian traffic signals shall be black in color. The inside surface of the visors shall be flat black. The characteristics of various signal components shall be an integral part of the material composition.

(2) The color and finish of the signal parts shall be such that it will not require painting to maintain a pleasing and functional appearance. A scratch on any signal part shall not expose uncolored material.

(3) Pedestrian signal mounting brackets, prior to painting, shall have all metal surfaces cleaned and pretreated before assembly to accept phosphate coating in accordance with federal specifications TT-C-490, Cleaning Methods and Pre-treatment of Ferrous Surfaces or Organic Coatings.

(4) Semi-gloss or glossy black enamel shall be used to finish coat all other exterior surfaces of the fittings except stainless steel latch bolts and clips.

3. **Electrical**: Minimum performance requirements for LED countdown pedestrian signals include:

A. The LED countdown signal module shall operate from a 60 hertz (Hz) line frequency and over a voltage range of 80-135 volts (V) alternating current (AC), Root-Mean-Square (RMS).

B. The signal operates over the temperature range of –40 °F to 165 °F (-40 °C to 74 °C) with no more than a 10 percent change in luminous intensity over the voltage range.

C. Each LED countdown signal module shall be provided with two color-coded #18 AWG, minimum, 39-inch, 600V, jacketed wires, conforming to the NEC, rated for service at 221 °F (105 °C). The wire leads shall be provided with pre-insulated spade lug terminals for connection to existing traffic signal terminal blocks.

D. The LED countdown signal module shall include voltage surge protection to withstand high-repetition noise transients and low-repetition, high-energy transients as stated in Section 2.1.8 of *National Electrical Manufacturers Association* (NEMA) *Standard TS-2*.

E. The LED circuitry shall prevent flicker at less than 100 Hz over the voltage range specified in Section 5.2 of the LED Performance Specifications.

F. The LED countdown signal and associated on-board circuitry must meet Federal Communications Commission (FCC) Title 47, Sub Part B, Section 15 regulations concerning the emission of electronic noise.

G. Total harmonic distortion (THD) induced into the AC power line by the module shall not exceed 20 percent when operating at rated voltage, at 77 °F (25 °C).

H. A six-point terminal block with screw terminals for use with spade lugs shall be provided for wire connection from the LED module and incoming wires from the controller. The terminal block shall be centrally located in the housing and have a minimum 1-inch lateral clearance from the housing to facilitate wiring.

I. Power requirements shall be 120 VAC 50/60 Hz. Voltage surge protection shall be as stated in current NEMA TS 2 Section 2.1.6 specifications.

4. **Power Consumption and Operational Range**:

A. The LED countdown pedestrian traffic signal shall consume no more than 8 watts for the “Hand” icon and 6 watts for the “Walking Person” and 5 watts for the countdown digits, at 120 VAC max, 0.90 P.F. (power factor) at 77 °F (25 °C).

B. The uniformity of the “Walking Person” and “Hand” icons’ luminance shall meet a ratio of not more than 1 to 10 between the minimum and maximum luminance values, as measured in ½ inch diameter spots.

C. The LED pedestrian countdown module shall have a uniform appearance when illuminated. It shall not be readily apparent that LEDs are the source of illumination. A pixilated appearance shall not be allowed.

D. When operating within the temperature range specified in Section 3.3.1, the luminance of the modules shall not exceed three times the minimum luminance of the modules as defined in Section 4.1.1 of the LED Performance Specifications.

5. **Photometric Requirements**:

A. There shall be no visible illumination of this LED module when the applied voltage is less than 35 VAC RMS.

B. The measured chromaticity coordinates of LED pedestrian signal modules shall conform to the color regions based on the 1931 CIE chromaticity diagram included in the LED Performance Specifications. Each icon of the LED module shall reach 90 percent of their full illumination (turn-on) within 75 msec of applying normal operating voltage. The modules shall not be illuminated (turn-off) after 75 msec of removing normal operating voltage.

C. Test data to verify pedestrian signal performance meeting Section 6 of the LED Performance Specifications requirements shall be supplied by a certified independent test lab. In order to test, control and monitor the “Walking Person,” “Hand,” and “Countdown” digits separately, there shall be three wires provided for electrical connection to the “Walking Person/Hand” and three wires provided for the “Countdown” digits.

6. **Countdown Timer**:

A. The countdown timer shall be micro-controller based. The timer shall countdown only during the pedestrian clearance interval, shall continuously monitor the pedestrian clearance interval, and shall automatically adjust for any changes made at the controller. When the flashing “Hand” becomes solid, the module shall display “0” for one second and then black out. The countdown display shall remain dark until the beginning of the next countdown.

B. In the event of a pre-emption sequence, the countdown module shall skip the pre-empted clearance time and reach “0” at the same time as the flashing “Hand” becomes solid. In the cycle following a per-emption call, the signal shall display the correct time and not be affected by the reduced previous cycle. The countdown shall remain synchronized with the signal indications and always reach 0 at the same time as the flashing “Hand” becomes solid.

C. The LED module shall have a removable plug on the rear of the unit allowing easy access to dip switches for selecting the following features: 1 – display “0” during stand-by, 2 – turn on all LEDs for testing, 3 – countdown walk plus clearance time, and 4 – disable countdown display.

D. The countdown module shall have an internal conflict monitor preventing any possible conflicts between the “Walking Man”/”Hand” indications and the countdown timer display. It shall prevent the display from counting down during a steady “Hand” indication.

7. **Tests, Inspection, and Sampling.** Each LED shall be tested as necessary and inspected for conformance with this specification before shipment. Failure of any piece of equipment to meet the requirements of this specification shall be cause for rejection. Test data to verify pedestrian signal performance meeting Section 6 of the LED Performance Specifications requirements shall be supplied by a certified independent test lab.

8. **Drawings and Information.** If required, two copies of a detailed drawing and material specification list of the pedestrian head shall be supplied.

All LED pedestrian signal modules shall comply with the quality assurance production testing and inspection as specified in Section 6 of the ITE LED Performance Specifications the PTCSH.

A test report from an independent lab certifying the pedestrian signals meet the requirements of the ITE LED Performance Specifications, adopted March 2004, shall be provided.

The information required under paragraphs one, two, and three along with a sample, if requested, will be held as standards for acceptance.

9. **Warranty:** The Contractor shall provide materials with a manufacturer's warranty/guarantee, transferable to MDOT, that the supplied materials will be free from all defects in materials and workmanship for the stated time period from the date of shipment. The Contractor shall supply the Engineer with any warranty/guarantee documents from the manufacturer and a copy of the invoice showing date of shipment.

A. Modules that exhibit luminous intensities less than the minimum specified values within the first 60 months of the date of delivery shall be replaced, repaired, or have the purchase value refunded.

B. Upon request, the LED lamp module manufacturer shall provide written documentation of its ability to satisfy a catastrophic warranty claim.

c. Construction. The (LED) Countdown Pedestrian Traffic Signals shall be installed as shown on the plans. All work shall comply with Sections 819 and 820 of the Standard Specifications for Construction, this Special Provision, and shall be used with appropriate modifications to Housing, Visors, and Mounting Assemblies to accommodate LED countdown pedestrian signal modules.

d. Measurement and Payment. The completed work as described will be measured and paid for using the following contract item (pay item):

Contract Item (Pay Item)	**Pay Unit**
TS, Pedestrian, _____Way ___ Mtd (LED) Countdown	Each

MICHIGAN
DEPARTMENT OF TRANSPORTATION

SPECIAL PROVISION
FOR
ACCESSIBLE PEDESTRIAN SIGNAL SYSTEM

T&S:DJA 171 of 232 C&T:APPR:JJG:JKG:06-30-06

a. Description. Furnish all labor, equipment, and material required or remove to install an Accessible Pedestrian Signal System at an intersection which shall be compatible with solid state pretimed or actuated traffic signal control equipment and cabinet environments. The system shall assist pedestrians who have visual or physical disabilities in actuating the pedestrian signal phase. The system shall include a Central Control Unit (CCU), a Configurator, Push Button Stations (PBS), signs, and any associated material necessary to complete the work, and be a Polara Navigator type system or an approved equal.

b. Materials. Material shall meet Sections 918 and 921 of the Standard Specifications for Construction and this Special Provision.

1. General Requirements: The Accessible Pedestrian Signal System shall include push buttons which are audibly locatable and equipped with tactile arrows pointing in the same direction as the associated crosswalk. The system shall consist of 2 to 12 Push Button Stations (maximum of 3 per phase), which are controlled by a single base unit installed traffic signal control cabinet. The system shall provide various audible features and all locator tones shall emanate from Push Button Stations and be synchronized.

2. Physical and Mechanical Requirements:

   A. General:

      (1) The system shall provide the following audible features:

         (a) A locating tone
         (b) 5 walk sound choices (field selectable)
         (c) 3 pedestrian – clearance sound choices (field selectable)
         (d) Direction of travel (as standard feature with extended push)
         (d) Information message (custom feature with extended push)

      (2) Each audible feature shall have independently settable minimum and maximum volume limits. All volume and optional feature shall be settable using a handheld infrared device with password security. The infrared device shall be capable of setting/updating all Push Button Stations on the intersection from a single Push Button Station (Global updating).

      (3) All sounds shall automatically adjust to ambient noise levels over a 60 dB range. The system shall be able to mute sounds on all crosswalks except the activated crosswalk (selectable feature).

(4) The system shall provide an audible countdown during the pedestrian clearance phase.

(5) Push Button Stations shall require only two wires coming from the traffic control cabinet for each phase/crosswalk.

(6) The Push Button Station shall have a 2-inch button with a tactile raised directional arrow on the button. The arrow/button shall vibrate during the walk period, following a button push. The arrow shall be able to be changed to one of four directions and should point across the street in the direction of travel of the associated crosswalk.

(7) The Push Button Station should be installed at a height of 40 inches (± 2 inches) from the ground to the center of the push button.

(8) The Push Button Station frame shall be made of cast aluminum with mounting holes to hold a 9 inch x 12 inch, R10-3b, 3d, or 3e pedestrian sign. The sign should be parallel with the associated crosswalk.

(9) The system shall be able to have multiple language capability, selectable by user, and able to play an emergency preemption message.

(10) The system shall be able to self test and report any faults to the traffic controller.

B. Central Control Unit (CCU):

(1) The CCU shall be the power supply and signaling interface, between the intersection traffic signal controller and the Push Button Stations, which are located at the crosswalks, and installed inside the traffic signal controller cabinet.

(2) The CCU shall control up to and including 12 Push Button Stations and control up to and including 4 pedestrian phases, receiving its timing from the hand/walking person (walk/don't walk) signals.

(3) Additional advanced configurations shall be available by utilizing its general purpose Inputs and Outputs. All Inputs and Outputs shall have full Optical Isolation and include Transient Voltage Protection as follows:

(a) General Purpose Inputs: 10-36 Volts AC/DC Peak with a 10 mA maximum.

(b) General Purpose Outputs and Pedestrian Outputs: 36 Volts AC/DC peak, 0.3A Solid State Fussed Contact Closure.

(c) Fault Output: Normally Open and Closed Relay Contacts, 125 Volts AC/DC, 1A maximum.

(d) Pedestrian Hand/Walking Person (Walk/Don't Walk) Inputs: 80-150 Volts AC/DC, 5mA maximum.

(e) A, B, C, D PBS Power Outputs: Nominal 22 Volts DC, Short Circuit Protected, Auto Recovering.

(f) Environment Operation and Storage Range: -30°F to 165°F (-35°C to 74°C), 0 to 100 percent Humidity, Non-condensing.

(g) Line Power: 25w to 75w typical, 120w peak with eight Push Button Stations.

(4) There shall be a 50-pin cable assembly that plugs into the CCU for termination to the traffic signal controller terminal facilities. The connector shall be a Positronic MD50F20Z0X or equivalent and provided with 20 – 24 gauge wire, which complies with the requirements of UL 1061.

C. Push Button Station (PBS):

(1) The PBS shall be the pedestrian interface to the Accessible Pedestrian Signal System, including the CCU installed in the traffic signal controller cabinet, frame, sign(s), ADA compliant push button(s), and required mounting hardware.

(2) The PBS shall provide information and cues via both a vibrating arrow button and audible sounds to make the intersection accessible for all pedestrians.

(3) The PBS shall emanate all sounds from the back of the unit. The speaker shall be 8 ohms, 15W, weather-proof and protected by a vandal resistant screen.

(4) The PBS shall provide a sunlight-visible red LED which latches “ON” to confirm the button has been pushed.

(5) The PBS shall provide the following standard features:

(a) Confirmation of a button push via latching LED, sound, and vibratactile bounce.

(b) Direction of travel (with extended button push).

(c) Standard locating tone, custom sound, or verbal countdown during pedestrian clearance.

(d) All sounds automatically adjust to ambient over 60 dB range.

(e) Most sounds have a minimum and maximum volume independently set.

(f) All sounds are synchronized.

(g) Extended button push can turn on, boost volumes, and/or mute all sounds except those on activated crosswalk.

(h) Special emergency messages available.

(6) The PBS shall be capable of providing a custom message and sound options for the following features:

(a) Custom locating tone
(b) Custom clearance sound

(c) Custom walk sounds/message
(d) Informational message
(e) Multiple languages (up to three, selected by user)
(f) Street name in Braille on the sign

(7) The PBS shall be available in three standard colors: Black, Green, and Yellow and the operational range shall be -40°F to 165°F (-40°C to 60°C).

The PBS shall be constructed of cast aluminum, chemically filmed and powder coated. The Face Plate shall be aluminum, powder coated, with ink marking.

(9) The push button shall be ADA compliant, cast aluminum, nickel plated, powder coated with raised tactile arrow on button, and solid state switch rated to 20 million activations (minimum).

D. Configurator:

(1) The Configurator shall be a handheld remote used for configuring the Accessible Pedestrian Signal System, Central Control Unit (CCU), or individual Push Button Stations (PBS).

(2) The Configurator shall communicate via infrared technology with the CCU and the PBS with an interactive operation to select various configuration options at the intersection(s) by standing adjacent to either the CCU or PBS.

(3) The Configurator remote shall include a Display of 2 lines with 16 characters, LCD with backlight, and have an adjustable contrast.

(4) The Configurator shall be powered by four (4) AA 1.5V cell batteries, include a low battery warning, and have an auto or manual shut-off switch.

(5) The Configurator shall have an operating temperature range of 32°F to 122°F (0°C to 50°C).

3. Display and Audio Requirements:

A. Display:

(1) The LED shall light when the button is pushed and remain lit until the next walk phase.

(2) The LED luminous intensity shall be greater than 1200 mcd, sunlight visible, ultra bright red, with a viewing angle of 160°.

B. Audio:

(1) The Audio Amplifier Power output shall be 10W RMS into 8 ohms.

(2) The Volume Control Automatic Adjustment Range shall be 28 dB (maximum).

(3) The Ambient Noise Frequency range for the Microphone shall have an approximate range of 170Hz to 2.3kHz.

(4) The Button Tone shall provide a brief “tick” to confirm each button push.

(5) The Audible Locating Tone shall operate during the pedestrian clearance and hand (don’t walk) interval and have an 880Hz plus harmonic, 0.1 second duration, 1 second interval.

(6) The Audible Chirp Sound shall operate only during walking person (walk intervals) at a range from 2700Hz to 1700Hz, 0.2 duration, 1 second interval.

(7) The Audible Cuckoo Sound shall operate only during walking person (walk intervals) at a range from 1250Hz to 1000Hz, 0.6 second duration, 1.8 second interval.

4. Warranty

(1) The manufacturer shall guarantee all material supplied shall be free from all defects in materials and workmanship for a period of two (2) years from the date of shipment.

c. Construction. The furnishing and installation of the Accessible Pedestrian Signal System at an intersection shall be as indicated on the plans and in accordance with the MMUTCD. All work shall comply with Sections 819 and 820 of the Standard Specifications for Construction, applicable “typical” signal construction details, and this Special Provision.

Remove the Accessible Pedestrian Signal System at an intersection shall be as indicated on the plans and shall include the Central Control Unit, Configurator, hardware, cable, connectors, and other material required to complete the work. All work shall comply with Sections 819 and 820 of the Standard Specifications for Construction.

Remove the Push Button Station shall be as indicated on the plans and shall include the Push Button Station, Sign, associated assembly, hardware, cable, connectors, and other material required to complete the work. All work shall comply with Sections 819 and 820 of the Standard Specifications for Construction.

d. Measurement and Payment. The completed work as measured will be paid for at the contract unit price for the following contract items (pay items):

Contract Item (Pay Item)	Pay Unit
Pedestrian Signal System, Accessible	Each
Push Button Station	Each
Push Button Station and Sign	Each
Pedestrian Signal System, Accessible, Rem	Each
Push Button Station, Rem	Each

The contract unit price each for **Pedestrian Signal System, Accessible** shall be payment in full for furnishing all labor, equipment, and materials required to install the Accessible Pedestrian Signal System at an intersection, including a Central Control Unit, Configurator, hardware, fittings,

conduit(s), wiring, grounding and ground rod(s), and all associated material necessary to complete the work.

The contract unit price each for **Push Button Station** and **Push Button Station and Sign** shall be payment in full for furnishing all labor, equipment, and material necessary to install the Push Button Station, sign (when appropriate), associated assembly, brackets, hardwire, fittings, conduit(s), cable to controller, wiring, grounding, ground rod(s), and all other associated material required to complete the work.

For **Pedestrian Signal System, Accessible, Rem**, the contract unit price each shall be payment in full for furnishing all labor, equipment, and material required to remove an Accessible Pedestrian Signal System at an intersection including a Central Control Unit, Configurator, hardware, fittings, hardware, cable, connectors, conduit(s), grounding, and other material required to complete the work. Storage and/or disposal of this material is also included.

For **Push Button Station, Rem**, the contract unit price each shall be payment in full for furnishing all labor, equipment, and material required to remove a Push Button Station, Sign, associated assembly, brackets, hardware, fittings, cable, connectors, conduit(s), ground, and other material required to complete the work. Storage and/or disposal of this material is also included.

03SP810(B)

MICHIGAN
DEPARTMENT OF TRANSPORTATION

SPECIAL PROVISION
FOR
TRAFFIC SIGNAL MAST ARM POLE AND MAST ARM (TRUNKLINE)

C&T:SJC 1 of 3 C&T:APPR:EMB:RDT:07-27-07
FHWA:APPR:08-07-07

a. Description. This work shall consist of furnishing, fabricating and erecting Traffic Signal Mast Arm Pole and Mast Arm as shown on the plans, according to the standard specifications and as specified herein. This specification is for an anchor base type steel pole, including arms, anchor bolts and other associated hardware, suitable for supporting traffic signals and small signs.

b. Material. The pole tube and arm tube shall be ASTM A 595, Grade A, or ASTM A 572, Grade 50, meeting a yield point of 55 ksi. Steel base plates shall be ASTM A 36. Luminaire arm assembly shall be ASTM A 53 grade B, ASTM A 36, or ASTM A 595 grade A.

Use ASTM A 325 high strength bolts galvanized according to ASTM A 153.

The anchor bolts, nuts, and washers shall be according to subsections 908.15.A and B.

All steel shall be hot dip galvanized after fabrication according to ASTM A 123.

Foundation steel reinforcement shall be according to section 905. Foundation concrete shall be Grade S2 according to section 701.

Casings shall be ASTM A 252, Grade 2 steel, shall be smooth, watertight, and of ample strength to withstand handling stresses and external subsurface pressures. The inside diameter of casing shall not be less than the specified size of the shaft.

c. Fabrication. Fabricate and weld according to section 707, the Special Provision for Structural Steel and Aluminum Construction, Part II and AWS D1.1:2002.

1. The pole tube and arm tube may have a uniform taper.

2. The pole tube and arm tube shall not have more than one longitudinal weld. The longitudinal weld shall be rolled or ground flush. Transverse welds in the pole and arm are not allowed. The pole tube shall be one continuous length.

3. The arm tube shall be attached to a connection plate by a full penetration weld. The arm tube shall be bolted to the pole tube as shown on the plans. Control distortion of flange plates for flatness to assure full contact between mating surfaces in an unbolted, relaxed condition.

4. All longitudinal seam welds require10 percent magnetic particle testing according to ASTM

E 709. All other welds require 100 percent magnetic particle testing.

5. The longitudinal seam weld at arm lap joint shall be full penetration butt welded a minimum of 36 inches. In the final erected position, the lap of the arm tubes shall not extend beyond the butt weld.

6. Ultrasonically test full penetration butt welds of longitudinal seam welds according to subsection 918.10. Except that for material thickness equal to or greater than 5/16 inch, the accept/reject criteria shall be according to AWS Section 6.13 and Table 6.3.

7. The pole base plate shall have evenly spaced holes so the pole may be bolted to a concrete foundation as shown on the plans. The lower surface of the base shall be finished flat and the base shall be attached at 90 degrees to the pole axis. The base shall have a clear opening of at least 6-1/2 inch diameter to allow entrance of cables from conduit into the foundation as shown on the plans.

8. A handhole opening and cover shall be provided. The handhole opening shall be have a reinforcing frame welded to the pole. The handhole shall not reduce the strength of the pole. The handhole cover shall be securely fastened by stainless steel hex head cap screws or by an approved locking device.

9. Luminaire arm assembly shall provide a weather resistant connection with a smooth wiring raceway. The assembly shall be attached to a connection clamp by welding. The clamp halves shall be bolted together around the pole as shown on the plans.

10. A suitable pole top shall be furnished and shall be provided with means for securing it to the top of the pole.

11. A hook or other suitable device for the support of cable shall be provided on the inside of the pole near the top.

12. For grounding purposes, a standard 1/2 inch nut shall be welded to the inside of the pole so that it is readily accessible from the handhole.

d. Erection. Anchor bolt installation and tightening shall be according to subsection 810.03.N. The following modifications and additions to subsection 810.03 N shall apply:

1. Delete the first sentence of paragraph 2.a. and replace with the following: All leveling nuts (bottom nuts) shall be brought to level condition with respect to each other.

   Add the following to the paragraph: Stainless steel beveled washers shall be used to provide the tilt back of the pole required to compensate for signal arm deflection. A beveled washer shall be added between the nut washer and the base plate to eliminate the gap that exists between both nuts (top and leveling) and the base plate. The washer shall be stainless steel Type 304, shall be the same diameter as the hardened washer, and shall be beveled as required to eliminate the gap between the nut and the base plate and as determined by the Engineer. Shim plates are not allowed. The cost for these beveled

stainless steel washers shall be included in the pay item for traffic signal pole foundations.

In lieu of stainless steel beveled washers to provide the pole upright tilt back to offset arm pole deflection, the arm to pole upright connection may be fabricated to compensate for this deflection. This detail must be shown on shop drawings for approval by the Engineer. All leveling nuts (bottom nuts) shall be brought to full bearing on the bottom of the base plate prior to commencing hydraulic wrench tightening.

2. Add the following sentence to the end of the paragraph: This procedure shall be witnessed by the Engineer.

e. Foundation. The foundation shall be according to subsection 810.03.K and the plans. Concrete shall fill the entire hole excavated for the foundation. Forms shall not be used, except to form the foundation top, without the prior approval of the Engineer.

f. Measurement and Payment. The completed work as described will be measured and paid for using the following contract items (pay items):

Contract Item (Pay Item)	Pay Unit
Mast Arm Std	Each
Mast Arm	Each
Mast Arm Std Fdn, Cased	Foot
Mast Arm Std Fdn, Uncased	Foot

Mast Arm Std and **Mast Arm** includes payment for furnishing, fabricating and erecting the steel standard on the foundation.

Mast Arm Std Fdn, (type) includes payments for constructing the foundation, furnishing and installing conduit bend(s), grounding and ground rod(s), and utilization of steel casing for foundation excavation if required. Excavation granular material back fill, disposal of waste material, complete restoration of the site including seed, sod, removal and placement is included in the pay item and will not be paid for separately.

03T820(420)

MICHIGAN
DEPARTMENT OF TRANSPORTATION

SPECIAL PROVISION
FOR
WIRELESS VEHICLE DETECTION SYSTEM

T&S:DJA 1 of 3 C&T:APPR:BRZ:DBP:01-24-08

a. Description. Furnish all labor, equipment, and material required to install, salvage or remove a Wireless Vehicle Detection System, complete with master interface board, access box, access point enclosure, repeater, mounting brackets, hardware, cable, connectors, grounding, sensors and epoxy, and any associated material required to complete the work. Storage and disposal of materials, when required, is also included in this item. Storage of salvaged equipment to be installed on the project shall be contained in a protected and clean environment necessary to provide a complete and operating job.

b. Materials. Material shall meet sections 918 and 921 of the Standard Specifications of Construction and this Special Provision.

1. **General.** The Wireless Vehicle Detection System shall provide a system that detects and/or counts vehicles using battery powered magnetometers utilizing wireless communications to transmit detection information.

The Wireless Vehicle Detection System (VDS) shall consist of the master interface board, interface cards, access box, mounting rack and hardware; one wireless Access Point (AP) including National Electrical Manufactures Association (NEMA) 4X type enclosure with mounting bracket and hardware; one battery operated wireless Repeater (RP) with mounting bracket and hardwire, eight wireless flush mount Vehicle Sensor Nodes (VSN) including manufacturer recommended epoxy, and any associated cable, connectors and hardware necessary to complete the work.

The VDS shall be capable of providing vehicle counts per lane, lane occupancy, vehicle speed (when more than one VSN is installed per lane), and vehicle classification (when one or more VSN is installed per lane). The time intervals for the above measurements shall be user selectable from 30 seconds to 24 hours.

Communication between the VSN, AP and RP shall be wireless.

2. **Vehicle Sensor Node.** The VSN shall consist of a magnetometer, microprocessor, wireless transmitter/receiver, battery and epoxy for placing the node into the pavement.

The VSN shall be 1 inch high and 3 inches in diameter and be contained in a fully encapsulated housing to prevent moisture from degrading the components.

The VSN shall operate at temperature range from –37 degrees F to + 176 degrees F (-38 degrees C to + 80 degrees C) and operate from its battery for a minimum of 10 years under normal traffic conditions.

The VSN shall detect a vehicle by measuring a change in the earth's magnetic field and transmit the detected information within 125ms of receiving the detected vehicle.

The VSN shall be capable of being programmed with a unique identifying code. This code and detector information shall be transmitted via a wireless radio communication method.

The VSN shall automatically recalibrate in the event of a detector lock.

3. **Access Point.** The AP shall be the hub of the sensor network and be capable of communicating with up to 48 VSN's transmitting detection information to a centralized server over a cellular data connection, Ethernet or a serial link.

The AP shall be capable of transmitting detection information to a 170, 2070 or National Electrical Manufactures Association (NEMA) type controller to provide real time detector information. The VSN shall respond within 100 seconds when the AP is powered up.

The AP shall operate from 48 volts direct current (VDC) at 3 watt power or via non-isolated external 10 to 15VDC at 2 watt power and operate at a temperature range from –37 degrees F to + 176 degrees F (-38 degrees C to +80 degrees C).

The AP shall be capable of providing 1500V isolation and 5KV surge protection.

The AP electronics shall be housed in a plastic enclosure no larger than 12 inches high, by 8 inches wide, by 4 inches deep and meet NEMA 4X and International Protection (IP)67 standards complete with mounting bracket and associated hardware.

4. **Wireless Repeater.** The RP shall be battery powered and housed in a plastic enclosure no larger than 5 inches high, by 4 inches wide, by 4 inches deep, complete with mounting bracket and associated hardware.

The RP shall extend the effective communication range of the VSN to the AP up to 1000 feet.

The RP shall have an operational temperature range of -37 degrees F to +176 degrees F (-38 degrees C to + 80 degrees C).

5. **Wireless Communication.** The VDS shall operate in the unlicensed Industrial, Scientific and Medical (ISM) 2.4 GHz band. The AP and VSN shall operate in any one of the 16 channels available in the band. Two way communication shall be provided between the AP and VSN to ensure integrity over the RP interface.

The VSN shall use a Time Division Multiple Access (TMDA) protocol wherein each sensor is assigned a time slot during which it transmits and receives on or more data packets.

All system components shall be synchronized to the same time reference sourced by the AP.

6. **Software.** The VDS shall be capable of accepting software and firmware upgrades.

Software shall be provided to configure the VSN, AP and RP units and also to store and retrieve the detection data. The VSN and RP shall be reconfigurable by a user over the wireless communication interface.

7. **Quality/Warranty.** The Contractor will provide materials with a manufacturer's guarantee/warranty, transferable to the Michigan Department of Transportation (MDOT), that the supplied materials will be free from all defects in materials and workmanship for a specified period from the date of shipment. The Contractor will supply the Engineer with any guarantee/warranty documents from the manufacturer and a copy of the invoice showing date of shipment. A factory authorized representative shall be available for assistance within 24 hours of notification during the warranty period.

c. Construction. The furnishing and installation of the Wireless Vehicle Detection System shall be as indicated on the plans. The installation of the Wireless Vehicle Detection System, salvaged on the project, shall be as indicated on the plans. The removal of the Wireless Vehicle Detection System includes all VSN, AP and RP units, associated enclosures, mounting brackets and hardware necessary to complete the work.

All work shall comply with sections 819 and 820 of the Standard Specifications for Construction, the applicable "typical" construction details, and this Special Provision. Storage or disposal of the removed material is included and will not be paid for separately, and will be performed as directed by the Engineer and section 204 of the Standard Specifications for Construction.

The VSN shall be installed in a 4 inch by 2 1/4 inch core drilled hole in the pavement surface and placed in the traffic lane as indicated on the plans or as directed by the Engineer. A two part polyurea epoxy recommended by the manufacturer, or approved equal, shall encapsulate the VSN.

The AP and RP shall be installed within range of the sensors and as indicated on the plans or as directed by the Engineer.

d. Measurement and Payment. The completed work as described shall be measured and paid for using the following contract items (pay items):

Contact Items (Pay Items)	**Pay Unit**
Wireless Vehicle Detection System	Each
Wireless Vehicle Sensor Node	Each
Wireless Access Point	Each
Wireless Repeater	Each
Wireless Vehicle Detection System, Rem	Each
Wireless Vehicle Detection System, Salv	Each

921.03

The reflector mounting must be designed and constructed to ensure proper alignment between the lens and reflector. To maintain this position, the reflector must remain in a fixed position when the door of the housing is open or when inserting or removing a lamp. The reflector mounting must be sufficiently rigid, so that forces applied to the lamp during the maintenance will not unseat the reflector.

3. **Lens**. The lens must be circular with nominal 8-or 12-inch diameter. Each signal face, consisting of three optical units, must be supplied with red, yellow and green lenses, in that order, with the red lens at the top. Lens must display a true color when illuminated and the outer surface must be convex and smooth. They must conform to the requirements for Traffic Signal Lenses in Paragraph 6 of the ITE Standard.

   Lenses must be made of polycarbonate plastic capable of withstanding continuous illumination from lamps of designated wattage without damage to the lens.

   The lens must be securely mounted to the housing door to assure alignment and a neoprene gasket must be provided between the door and the lens.

D. **Electrical Wiring**. Electrical wiring must be stranded wire conforming to ITE Standards. Each signal must be equipped with a barrier type terminal block with a minimum of four terminals; one for each optical unit and one common terminal. The terminal block must be mounted in the center section in such a position as not to interfere mechanically with other components of the signal. The terminal block must be located in the housing to minimize the danger of electrical shock to personnel performing maintenance on the signal head.

The wiring must be fastened to the lamp receptacle so as to be electrically and mechanically secure. All exposed current carrying parts must be sufficiently insulated to prevent electrical shock hazard. Pre-insulated terminals must be used on the wires at the terminal block connection.

Pressure type terminal blocks will not be permitted.

E. **Mounting Assemblies**. Mounting assemblies must include all hardware for a complete assembly of the signal.

921.03

1. **Pipe**. Pipe used in mounting assemblies must be 1½-inch standard steel pipe with tapered threads. Straight threads will not be allowed. All exposed pipe threads must have a plastic thread protector installed to help protect the threads from damage during shipping.

2. **Hub or Center Fitting**. The hub must be malleable iron and have a nominal 3 by 3 inch opening in which to draw wires and make connections. The cover for the opening must be secured with two ⅜ by ½ inch hexagon head 300 Series stainless steel screws. Any unused openings in the hub must be closed with ferrous or aluminum ornamental closures.

3. **Arms**. Pipe arms from the center hub must be of such lengths that the centers of the signal face housings will be at a radius of 8¾ inches ± ¼ inch for the 8-inch signals and 10¾ inches ±¼ inch for the 12-inch signals from the center of the hub fitting.

4. **Fittings**. Ferrous pipe crosses must be used to make all right angles in mounting frames with unused openings closed with ornamental closures. Set screws will not be allowed in the pipe crosses.

   All malleable iron fittings must be free from any flash and be free of any voids.

5. **Assemblies**. The bottom portion of the side post mounting assemblies must be constructed of 1½-inch standard steel pipe and fittings. The bottom portion of the span mounting assemblies must be a flat aluminum spacer with aluminum closures for attachment to signals. This spacer must be one piece construction or welded. Rivets are not permitted.

6. **Finish**. The internal surface of all pipe and fittings must be free from sharp edges and burrs that would injure the wiring.

7. **Cable Entrance Fitting**. The fitting must be one piece construction and made of malleable iron. The wire outlet must be provided with a composition bushing with opening to accommodate a multiconductor cable one inch in diameter. The threaded end of the fitting must be provided with a threaded nipple, two 1½-inch malleable iron locknuts and a stainless steel cotter key.

921.03

8. **Span Wire Fitting**. Fitting must be malleable iron to accommodate ¼ to ⅜ inch messenger wire with a 1⅝-inch diameter pin and 3/32 by 1 inch stainless steel cotter key. This pin must be located 3 7/16 inches from where the span cable seats into the saddle part of this fitting. The length of the saddle part must be 9 inches.

9. **Span and Cable Entrance Assembly**. Assembly must be capable of allowing the signal assembly to swing in any direction and return to the vertical position without placing undue stress on the span wire.

10. **Signal Head Attachment**. The top outlet of each signal bracket must be furnished with a nipple and either of the following: a watertight metal gasket with retainer to restrict the flow of the gasket, or one flat stainless steel washer, and one malleable iron hexagon nut ½ inch thick.

    The nipple must be of sufficient length to allow the use of the gasket or nut and washer.

F. **Paint and Color**.

1. **Mounting Assemblies**. Surfaces of mounting assemblies must be cleaned and surface treated according to standard industry practice to ensure bonding of the paint to the metal. After preparation, surfaces must be painted with durable weather resistant semi-gloss or gloss yellow enamel.

   The enamel must be applied at an average dry film thickness of 1.5 mils without blisters, runs or other defects. The dry film thickness will be determined by Method A, Inductance Thickness Gage, as specified in ASTM D 1400. The color must match the central color within the limits shown on the current FHWA *Highway Yellow Color Tolerance Chart* except that the color must not be darker than the central color.

2. **Signal Faces**. The signal faces must have the yellow color specified above permanently molded into the signal door, housing and visors. The inside of the visors must be given a finish coat of flat black paint that is compatible with polycarbonate plastic.

G. **Packing and Marking**. Each traffic signal must be packed separately to prevent damage or defacement to the signal and mounting assembly during transportation to the project site. Each carton must be legibly marked with the signal and mounting assembly description and supplier's name.

921.04 Pedestrian Signal (Incandescent Type). Except as otherwise noted, pedestrian signals must conform to the requirements for nominal 9 by 9 inch or 12 by 12 inch incandescent type pedestrian signals as specified in the ITE *Standard for Adjustable Face Pedestrian Signal Heads*. The pedestrian signal head must be designed for operation on 120-volt, 60-cycle, single-phase AC electrical systems.

A. **Housing**. The housing must be made of polycarbonate and conform to the requirements given under "Housing" in the ITE Standard except that unitized sectional construction will not be required. Each housing must have a 2-inch diameter round hole top and bottom to receive a 1½-inch supporting pipe. All fasteners such as screws, bolts, nuts, hinge pins and clamps, which are partially or wholly exposed on the exterior of the assembled housing must be of AISI Series 300 stainless steel. Other screws, bolts, nuts, and hinge pins on the interior of the housing must be of AISI Series 300 stainless steel, brass or aluminum. Plastic fasteners may not be used to secure the door.

B. **Visor**. Each signal head must have a tunnel type visor for each signal indication which encompasses the top and two sides of the lens. The visor must be made of sheet polycarbonate having a thickness of not less than 0.070 inches. The visor must fit tightly against the door and must not permit any perceptible filtration of light between the door and the visor. The visor must be detachable and must be 8 to 10 inches in length. The visor must be attached to the signal section.

C. **Optical Unit**. The optical unit consists of the lamp and lamp receptacle, reflector, and lens. The entire optical unit when assembled must be mounted in the housing so that it is independently sealed against dust and moisture.

1. **Lamp and lamp receptacle**. The lamp receptacle must be secured to the reflector so that it does not turn when replacing lamps and that it can be removed or replaced without the use of tools other than a screwdriver. The lamp receptacle may be rotated for positioning the lamp filament. The lamp receptacle and wiring must meet the ITE Standard.

   The candlepower and light distribution of the nominal 9 by 9 inch and 12 by 12 inch optical unit must conform to the ITE Standard for the standard symbolic pedestrian lens.

   The lamp receptacle must conform to the requirements given in the ITE Standard with the following additions:

921.04

The lamp receptacle must be held securely in the reflector by a device such as a clamp ring or ball. Means other than friction must be employed to prevent the lamp receptacle from turning when replacing lamps. It must be possible to remove or replace the receptacle without the use of tools other than a screwdriver and without removing the holding device or parts of the holding device from its mounting. The lamp will be a 130-volt, 69-watt, Type A 21, clear traffic signal lamp for the nominal 9-inch signals, and will be a 130-volt, 116-watt, Type A 21, clear traffic signal lamp for the nominal 12-inch signals.

2. **Reflector**. The reflector mounting must be designed and constructed to ensure proper alignment between the lens and reflector. To maintain this position, the reflector must remain in a fixed position when the door of the housing is open or when inserting or removing a lamp. The reflector mounting must be sufficiently rigid, so that forces applied to the lamp during maintenance will not unseat the reflector.

   The reflector must be made of aluminum with a sealed anodic coating over an electrolytically brightened surface. The coating thickness must conform to the ITE Standard. The reflector must be designed to redirect the light from a standard signal lamp to provide uniform illumination over the surface of the lens.

   The reflector mounting must be designed and constructed to ensure proper alignment between the lens and the reflectors. This correct alignment must be maintained after opening and closing the door for lamp replacement and other maintenance functions. The reflector must be mounted in the housing section and remain in a fixed position when the door of the housing is opened or when inserting or removing a lamp. The reflector mounting must be sufficiently rigid that any focusing, tipping, turning or pushing applied to the lamp will not cause the reflector to become unseated.

3. **Lens**. The lens must be securely mounted to the housing door to ensure alignment. A neoprene gasket must be provided between the door and the lens.

   The lenses must be nominal 9 by 9 inch or 12 by 12 inch conforming to the ITE Standard and the following provisions:

   DON'T WALK. The lens must be portland orange polycarbonate symbolic.

WALK. The lens must be lunar white polycarbonate symbolic.

The entire surface of the lens, except for the message, must be covered by an opaque black enamel, capable of totally hiding the light of a 150-watt lamp placed within 12 inches of the back surface of the lens.

The lens manufacturer must place a label on each lens which states that the lens meet the ITE Standard.

The lens must be mounted in such a way that secure tightening of set screws or other means of holding the lens in the lens frame will not crack the lens.

D. **Electrical Wiring**. The electrical wiring must consist of stranded wire and must conform to the ITE Standard. Each pedestrian signal must be equipped with a barrier type terminal block with a minimum of 3 terminals, one for each optical unit and one common terminal.

The terminal block must be mounted so that it does not interfere mechanically with the other components of the signal. The wiring must be fastened to the lamp receptacle so as to be electrically and mechanically secure. All exposed current-carrying parts must be sufficiently insulated to prevent electrical shock hazard. Pre-insulated terminals must be used on the wires at the terminal block connection. Pressure type terminal blocks will not be permitted.

E. **Mounting Bracket Frame Assembly and Fitting**. The mounting frame assembly and fittings must be constructed to be entirely weather-tight. The arms of the mounting assembly must be 1½-inch standard steel pipe and of such lengths to provide the following dimensions within a tolerance of ±¼ inch.

1. Radius from center of hub to center of pipe cross for overhead and pedestal mountings: 8¾ inches.

2. Length from center of the first pipe cross: 11½ inches for both "I" and "T" type brackets.

The internal surfaces of all pipe and fittings must be free from sharp edges and burrs that could damage the wiring. Ferrous pipe crosses must be used to make all right angles in the mounting assembly, and the unused openings of the pipe crosses must be closed with ornamental closures. Adapters or slip fitters must be malleable iron.

921.04

All malleable iron fittings must be free from any flash and be free of any voids.

All exposed pipe threads must have a plastic thread protector installed to help protect the threads from damage during shipping.

F. **Painting Requirements**. Prior to painting the mounting brackets, the ferrous and aluminum surfaces must be cleaned and treated according to standard industry practice for each type of metal to ensure bonding of the paint to the metal.

The coating system for the mounting bracket assembly must consist of durable and weather-resistant black enamels and must be applied at a uniform thickness without blisters, runs, or other defects. The average dry film thickness must be 1.5 mils as determined by Method A, Inductance Thickness Gage, as specified in ASTM D 1400.

A flat black enamel which is compatible with polycarbonate plastic must be used to finish coat the inside surface of visors. Polycarbonate molding or assemblies must have the black color as a constituent of the plastic.

G. **Packing and Marking**. Each pedestrian signal must be packed separately to prevent damage or defacement to the pedestrian signal and mounting assembly during transportation to the project site. Each carton must be legibly marked with the pedestrian signal and mounting assembly description and supplier's name.

921.05 Traffic Signal Strain Pole.

A. **Shaft Assembly and Fabrication.**

1. The shaft must be fabricated from high strength steel according to ASTM A 572, Grade 345 and galvanized after fabrication according to ASTM A 123.

2. The shaft must be tapered and may be of circular or polygonal (with eight or more sides) cross section.

3. The shaft must be of one continuous length with not more than one longitudinal weld. The longitudinal weld must be rolled or ground smooth. Transverse welds are not permitted except where the anchor base is welded to the shaft.

4. The shaft must be attached by two continuous welds to an ASTM A 36 or approved equal steel anchor base. One weld must be on

the inside of the base at the end of the shaft and the other weld must be on the outside at the top of the base. The two welds must be not less than 2 inches apart. The base and welded connection must develop the full strength of the shaft.

5. The base must have four evenly spaced holes so that the standard may be bolted to a concrete foundation. Thirty and thirty-six foot poles require holes for four 1¾-inch anchor bolts on a bolt circle of 18 inches. Forty foot poles require holes for four 2-inch anchor bolts on a bolt circle of 18 inches diameter.

6. Covers must be furnished for the anchor bolt ends and nuts. Screws for attaching the covers must be stainless steel hex head cap screws. Anchor bolt ends and nuts must be greased with a non-oxide type grease.

7. A handhole opening and cover must be provided. The handhole opening must have a reinforcing frame welded to the shaft. The handhole must not reduce the strength of the shaft. The handhole cover must be securely fastened by stainless steel hex head cap screws or by an approved locking device.

8. The lower surface of the base must be finished flat and the base must be attached at 90 degrees to the shaft axis. The base must have a clear opening at least 6½-inch diameter to allow entrance of cables from two 3-inch ducts into the foundation.

9. A suitable pole top must be furnished and must be provided with means for securing it to the top of the shaft.

10. A hook or other suitable device for the support of cable must be provided on the inside of the shaft near the top.

11. For grounding purposes, a standard ½-inch nut must be welded to the inside of the shaft so that it is readily accessible from the handhole.

12. Each pole must be furnished with three pole bands for attachment of traffic signal span, minor cable span, and service rack. No more than one of these items may be attached to each pole band.

B. **Strength Requirements**. The standard must be designed to withstand a minimum transverse load of 3700 pounds applied 18 inches below the top of the shaft without exceeding the elastic limit. The deflection

921.05

of the shaft must not exceed 0.40 inches per 100 pounds of transverse load applied at the same point.

C. **Air Circulation**. Provisions must be made for free air circulation inside the shaft to remove moisture caused by condensation or from other sources.

D. **Anchor Bolts**. Conform to subsection 908.15.C.

E. **Repairing Galvanized Surfaces**. Repair spelter coating damaged in transporting, handling, or erection according to subsection 716.03.E. All costs associated with this repair will be borne by the Contractor.

F. **Identification of Manufacturer**. Each standard must have a catalog or other manufacturer's identification number permanently marked on the base.

921.06 Traffic Signal Pedestal. Pedestals must be suitable for mounting traffic signals equipped with slip fitters for 4-inch nominal size pipe. The overall height of the pedestal must be as shown on the plans.

The pedestal must conform to the minimum specifications below, but consideration will be given to features of design, construction, and workmanship. The base must be designed for a 12¾-inch bolt circle diameter.

The pedestal must be made with a case aluminum base with an aluminum shaft threaded into the base. The shaft must be secured by a stainless steel set screw to prevent loosening or turning after installation.

A. **Shaft**. Aluminum pedestal shaft must be extruded and meet the following minimum requirements:

Aluminum alloy	ASTM B 308 6063-T6
Tensile strength, (ksi)	30
Yield strength, (ksi)	25
Elongation (%)	10
Wall thickness (in)	0.237
Outside diameter, (in)	4.5

Threading and deburring of the pedestal shaft must conform to the basic dimensions of American National Standard Taper Pipe Threads, NPT (ANSI B2.1).

B. **Finish**. Aluminum pedestals must not be painted. Aluminum shafts must have the following minimum finish requirements:

1. **Finish Type**. A tough surface texture consisting of a uniform grain pattern perpendicular to the axis of the shaft for the full length of shaft. This is not a mill finish.

2. **Texture Profile**. The grain profile must have a surface roughness (total profile height from peak to valley) of at least two, but not more than four times the Roughness Average (Ra) which must be 250 micro inches. Aluminum pedestal shafts must be free of excessive material; heat discoloration of material; irregular grain spacing, grain patterns, waviness, scratches or marks of varying depths and sizes and holes, ridges, cracks or other surface defects that are not removed in the finish process.

C. **Mill Certification**. Reports to be maintained by the manufacturer and supplied on request.

D. **Hardware**. The pedestal must be furnished complete with M24 foundation bolts a minimum of ⅝-inch diameter and 21 inches long which includes a 3-inch "L" bend on the unthreaded end.

Foundation bolts must be equipped with hexagonal nuts and washers. The threaded end of the bolts must be threaded for at least 3 inches. Bolts must be electro-galvanized after threading according to ASTM B 633, Service Condition SC 4 for their entire length, or hot-dip galvanized according to ASTM A 153. The nuts must be galvanized similarly and must turn freely on the bolts after galvanizing.

The access door in the base of the pedestal must be held in place with an AISI, Type 300 stainless steel machine screw.

E. **Drawings**. Furnish two copies of detailed dimensional and installation drawings to the Engineer.

F. **Packaging**. Threaded end must have a protective cap to prevent thread damage. Cardboard sleeve must cover the entire length of shaft to protect surface finish.

921.07 Illuminated Case Signs. Case signs must have internal illumination furnished by mercury vapor bulbs. The signs must be designed for operation on 120-volt, single-phase AC electrical systems. Moving components, such as doors, etc., must have proper fit and free movement.

921.07

A. **Hardware**. All fasteners, such as screws, bolts, nuts, hinges, pins and clamps, etc., which are partially or wholly exposed on the exterior must be AISI Series 300 stainless steel. The mounting hub for the case sign must be 1½ inch, malleable iron (KK-197).

B. **Ballast**. The ballast must be the regulator type. The ballast must be clearly marked, visible when set in the finished case, with the manufacturer's name or trademark, the catalog number, and the complete electrical rating as follows: number of lamps to be controlled, lamp type and lamp wattage, line frequency, line voltage, percent of allowable line voltage variation, line operating amperes, line wattage, power factor, line starting amperes, and the percentage of allowable line voltage dip.

Supplementary markings must be included to indicate the correct method of connection for the leads.

C. **Face**. The face must be lexan translucent white, or other plastic material with equivalent or better weathering, structural, and optical properties.

The face must be 0.125 inch ±10 percent in thickness. Each face must be marked with the name or tradename of the plastic.

The plastic face must be furnished blank, cut to proper size, and shipped with the completed case sign.

All sign panels without legends must be aluminum or as directed by the Engineer. The exterior face must be coated with a semi-gloss or gloss yellow enamel. The color must be within the limits shown on the *Highway Yellow Color Tolerance Chart* for the central color, except the color must be darker than the central color. The interior face must be coated with a semi-gloss or gloss white enamel.

D. **Wiring**. The signs must be furnished completely wired. All wiring must be 600-volt, No. 18 AWG soft annealed copper wire with the following characteristics.

1. Color coded.
2. At least 7 strands.
3. The insulation must be of 194 °F THHN thermoplastic or 194 °F neoprene and so marked.

The wiring must be run neatly in flexible aluminum conduit between the ballast box and the socket housing. Where conductors pass through an opening in sheet metal or conduit, a bushing, grommet, or rolled edge must be provided to protect conductors.

Splices and terminations must be made only at the terminal block, switch, lampholder leads, or ballast leads. The splices must be made mechanically and electrically secure by acceptable insulated pressure type, solderless connectors. Terminations must be made mechanically and electrically secure by acceptable insulated pressure type solderless terminals. Wire connecting screws, tabs, washers, and strips must be nickel plated brass.

The switch must be mounted such that it is prevented from turning. A mechanical means other than friction must be employed to prevent the switch from turning.

E. **Painting Requirements**. Prior to painting the case sign, all metal surfaces must be cleaned and surface treated according to standard industry practice to assure bonding of the paint to the metal.

The coating system must consist of durable and weather-resistant enamels of the color specified and must be applied at a uniform thickness without blisters, runs or other defects. The average dry film thickness must be 1.5 mils and determined by Method A, Inductance Thickness Gage, as specified in ASTM D 1400. The metal interior of the sign must be coated with a semi-gloss or gloss white enamel.

The exterior of the sign must be coated with a semi-gloss or gloss yellow enamel. The color must be within the limits shown on the *Highway Yellow Color Tolerance Chart* for the central color, except the color must be darker than the central color.

F. **Packing and Marking**. Each finished sign must have a permanent legible marking which must include the supplier's name, trademark, or other suitable means of identification.

Each sign must be individually packaged so that it will be accepted by common carriers and there will be no damage or defacement to the sign during transportation. Each package must be legibly marked with the descriptions of contents and supplier's name.

G. **Inspection**. Inspection, will be performed by the Department. Mill test reports for all aluminum extrusions must be furnished upon request by the Department.

921.08

At the time of delivery, the supplier must furnish a Type D certification stating that the pretreatment requirements as specified under subsection 921.06.E have been met. The certification must reference the method and material used in the pretreatment process.

921.08 Traffic Loop.

A. **Traffic Loop Wire.** Loop wire and loop lead-in wire must conform to subsection 918.03.

B. **Traffic Loop Sealant.** Sealant used to seal and encapsulate detector loop wires in concrete or hot mix asphalt (HMA) roadway surfaces must be supplied in cartridges suitable for use with a common one quart manual caulking gun or an air powered caulking gun. Sealant must conform to all of the following requirements.

1. One part, moisture curing, and self leveling, polyurethane or silicone rubber type.
2. The minimum temperature range for application of +40 °F to 100 °F. The minimum service temperature range of -40 °F to 200 °F.
3. Dielectric constant greater than 6 at 50 Hz and greater than 4 at 500 Hz or higher.
4. Viscosity of 28000-48000 cps and tack free within 24 hours or less after application.
5. Non-stringing, and ready to be driven over shortly after application.
6. Provide complete encapsulation of the detector loop wires, in a rubber-like environment. Provide protection against moisture, wire movement and damage under normal roadway conditions.
7. Moisture cure to a tough, long lasting seal that effectively resists weather, abrasion, oils, gasoline, anti-freeze solutions, brake fluids, and road salts normal encountered under typical road situations.
8. Remain permanently flexible and not shrink or pull out of the saw cut groves after application. The sealant level must remain the same over time to assure maximum protection.

C. **Packing and Marking.** Materials must be delivered in original, tightly sealed containers, clearly labeled with the manufacturer's name, product identification and lot number where applicable. Each case of cartridges must be packed so that there will be no damage or defacement

to the cartridges during transportation to the project site. Each carton must be legibly marked with the contents description, and supplier's name.

921.09 Digital Loop Detector/Cabinet. This unit must meet all current and applicable NEMA standards. The following are the minimum acceptable design and operating requirements.

A. **Loop Requirements.**

1. The loop detector must be shelf-mounted and have a nominal size of 6 inches high, 6 inches deep, and 2 inches wide.

2. The detector must start with the application of power and be completed within 60 seconds.

3. The detector loop inductance must be a minimum of 18 microhenries to a maximum of 2,000 or more microhenries.

4. The detector must function with up to 4,000 feet or greater maximum loop lead-in. The loop lead-in (feeder cable) must be two-conductor shielded AWG No. 12, and must meet current IMSA specification 50-2.

5. The detector operation frequency must be from a minimum of 25 to 85 kilohertz or greater. A three-position switch will select one of three loop oscillation frequencies. The three loop oscillation frequencies will be one at the high, one near the center and one at the low end of the above mentioned range.

6. The detector must have a switch to select three levels of detection, these levels must nominally be as follows:

   High . . . . . .0.01% Inductance Shift
   Medium . . . . . .0.08% Inductance Shift
   Low . . . . . 0.16% to 0.32% Inductance Shift

7. The detector must be switchable to select two levels of hold time. These levels must be: 15 minutes for the longest presence to a minimum of 125 milliseconds for all vehicles.

8. The unit must withstand a ten microfarad capacitor charged to 2,000 volts between loop terminals and chassis ground. The unit must also withstand a ten microfarad capacitor charged to 1,000 volts across open loop terminals.

921.09

9. The delay time on the detector unit must be able to be set from 0 to 63 seconds in one second increments.

10. The extension time on the detector must be able to be set from 0 to 15.75 seconds in 0.025 second increments.

11. The detector provides internal diagnostics, identifying and differentiating between an open, a short or a sudden 25% change (drift) in inductance. A separate fault LED is provided to identify three different fault conditions, also present fault or historical fault condition.

12. The unit must function when 90 through 135 VAC 60 Hertz power is applied.

13. The detector must have a ¼ amp SLO BLO fuse.

14. The wire connector on the unit must be MS 3102A-18-1P with pin connections as follows:

    Pin A-AC (-) . . . . . White
    Pin B-Relay Common. . . . . Yellow
    Pin C-AC (+) . . . . . Black
    Pin D-Loop . . . . . Gray
    Pin E-Loop . . . . . Brown
    Pin F-Relay (N.O.) . . . . . Blue
    Pin G-Relay (N.C.). . . . . .Red
    Pin H-Chassis Ground . . . . . Green
    Pin I-Spare . . . . . White/Black
    Pin J-Delay Override (120 VAC 60 Hertz) . . . . . White/Red

15. Applying 120 VAC 60 hertz power to pin J of the connector, will disable the delay time function of the unit.

16. One wiring harness must be supplied with each detector. It must be 96 inches in length minimum and be color coded. This must be a multi-conductor cable with a PVC outside covering. It must have a connector on one end that will mate with the connector on the detector.

B. **Detector Cabinet Requirements**. The loop detector must be furnished completely housed in a cabinet constructed of aluminum. The cabinet must be a pole mounting type with a nominal size of 7 by 12 by 13 inch.

All hinges and pins must be corrosion resistant. The door must be equipped with Corbin Lock Mechanism Pal 8, or approved equal. Two keys for the lock must be furnished.

The exterior of the detector cabinet and all mounting attachments must be finished with a durable and weather-resistant protective coating having a total dry film thickness of not less than 1.5 mils. The final coat must be aluminum in color, must give complete hiding and must be at least 0.75 mils in thickness.

Hardware must be provided to allow mounting the cabinet on either a wood or steel pole, or on a 4 by 8 inch wood post.

The cabinet must be designed to permit the detector to be withdrawn from the cabinet for inspection or maintenance without breaking any electrical connection or interrupting normal operation of the detector.

Cabinets must be furnished without conduit holes.

C. **Functional Data and Parts Lists**. With each loop detector, the manufacturer must supply each of the following items. Each of these items must apply directly to the loop detector with which it is supplied.

1. A complete set of schematic and wiring diagrams of the loop detector and terminal facilities.
2. A complete set of instructions for installation and maintenance of the loop detector.
3. A complete parts list.

D. **Packing and Marking**. Each loop detector must be packed separately to prevent damage or defacement to the loop detector during transportation. Each carton must be legibly marked with the loop detector description, contract number, and supplier's name.

Item #	Unit	Commodity #	Description	New Unit Price
1	Each	210-45-16-0807	Boxes, Pull, Used To Connect Underground Conduit. Light Duty, 17" X 11" X 12", Low Pressure Structural Foam Molded, Hdpe, Color Gray, Logo Shall Be Traffic Signal, With T.S. Lid. As Brand Name: Brooks Product #: HDPE1419-12, TS LID 104-1007	$32.60
2	Each	210-45-16-2902	Boxes, Pull, Used To Connect Underground Conduit. 25"L X 15.2"W X 18"H, Polymer Concrete Hand Hole, Reinforced With Heavy Weave Fiberglass, Without Lid. As Brand Name: Quazite Product #: PG1324BA18	$149.50
3	Each	210-45-16-3751	Boxes, Pull, Used To Connect Underground Conduit. 32.3"L X 19.3"W X 18"H Polymer Concrete Hand Hole, Reinforced With Heavy Weave Fiberglass, Without Lid. As Brand Name: Quazite Product #: PG1730BA18	$186.40
4	Each	550-14-75	Signs, message, fiber optic, changeable. Open/closed fiber optic sign; Legends shall be two messages: Message 1 - OPEN, Message 2 - CLOSED; size 102" x 20 3/4" As Brand Name: National Sign & Signal Product #: 1W102X20.75	$4,567.00
5	Each	550-14-75	Signs, Message, blank out sign; 1-way, 24" x 30", 1-message, 1 color, fiber optic blank out sign. Brand Name: National Sign & Signal Product #: 1W24X301MF.O.	$1,607.00
6	Each	550-14-75	Signs, Message, blank out sign; 1-way, 24" x 30", 1-message, 2 color, fiber optic blank out sign. Brand Name: National Sign & Signal Product #: 1W24X301MF.O.	$1,780.00
7	Each	550-14-75	Sign, message, Fiber Optic school speed limit, 24" x 36" with dimmer circuit, open/close MDOT std. Fiber optic sign specifications. Must specify speed limit with order. Brand Name: National Sign & Signal Product #: 1W24X36SCHF.O.	$3,093.00
8	Each	550-14-75	Crosswalk Sign, 8 foot, 2-way, internally illuminated, with yellow faces with black symbol and legend; includes free swinging bracket assembly; yellow housing body. Brand: National Sign & Signal Product #: 180XWALK2W	$1,093.00
9	Each	550-80-58	Push Button, Pedestrian, Yellow, die cast aluminum, to be used with pedestrian actuated controllers, highly vandal resistant, piezo electric pressure switch with audible tone and momentary LED light, polycarbonate housing, color shall be yellow. Brand Name: Polara Product #: BLDGM	$94.60

10	Each	550-80-58-1709	Push Button, Pedestrian, Yellow, die cast aluminum, to be used with pedestrian actuated controllers, able to withstand extremely hard service, color shall be yellow. Brand Name: Pelco Product #: ***SE-2043-P01***	$97.15
11	Each	550-81-30	***Controller, Traffic Signal, With 24 Circuit Terminal Facility, In 30" Side Of Pole Or Base Mount Cabinet, With 16 Channel Detector Card Rack with BIU And Power Supply. Cabinet Painted Inside And Out.*** As Brand Name: Eagle Product #: ***EPAC3108M52/M30***	$8,892.00
12	Each	550-81-30	***Controller, Traffic Signal, with 48 circuit terminal facility, in 44" base mount cabinet with 16 channel detector card rack with BIU and power supply. Cabinet painted inside and out.*** As Brand Name: Eagle Product #: ***EPAC3108M52/P44***	$10,505.00
13	Each	550-81-30	***Controller, Traffic Signal, with 36 Circuit Terminal Facility, in 36" base mount cabinet with 16 channel detector card rack with BIU and power supply. Cabinet painted inside and out.*** As Brand Name: Eagle Product #: ***EPAC3108M52/M36***	$10,137.00
14	Each	550-81-30	Master Controller, traffic signal master area responsive controller and traffic signal controller mechanism only. Brand Name: Eagle Product #: ***MARC/EPAC3108M52***	$3,735.00
15	Each	550-81-30	Push Button Isolator As Brand Name: PDC, Inc. Product #: DCI-82-242	$37.35
16	Each	550-81-30	***Loadswitch*** As Brand Name: ***TSC, Inc.*** Product #: ***200-OICL***	$23.70
17	Each	550-81-30	Detector, 2 Channel, with Delay and Extend Timer; TS1/TS2 As Brand Name: ***EDI*** Product #: ***ORACLE2E***	$183.10
18	Each	550-81-30	Detector, 4 Channel, with delay and extend timer; TS1/TS2 As Brand Name: ***EDI*** Product #: ***ORACLE4E***	$273.85
19	Each	550-81-30	Single Probe, Non-Invasive Micro-Loop, with 50 foot length of lead in cable. As Brand Name: ***Global Traffic Technologies*** Product #: ***M702-1-50***	$204.85
20	Each	550-81-30	Dual Probe, Non-Invasive Micro-Loop, with 4 foot spacing and 50 foot length of lead in cable. As Brand Name: ***Global Traffic Technologies*** Product #: M702-2-50-4	$382.00

21	Each	550-81-30	Triple Probe, Non-Invasive Micro-Loop, with 4 foot spacing and 50 foot length of lead in cable. As Brand Name: ***Global Traffic Technologies*** Product #: M702-3-50-4-4	$585.48
22	Each	550-81-30	Installation Kit, non-Invasive Micro-Loop. As Brand Name: ***Global Traffic Technologies*** Product #: 78-8114-5717-1	$114.00
23	Each	550-81-30	Carrier Cartridges, Non-Invasive Micro-Loop, 50 cartridges. As Brand Name: ***Global Traffic Technologies*** Product #: 78-8118-6124-0	$354.90
24	Each	550-81-30	Detector System, Video Processor in Rack, 4 Camera Inputs, 115VAC includes TS1 cable, manual, mouse, software, power cable and opto-isolated detector outputs. As Brand Name: Iteris Product #: VAN-BR41	$8,654.00
25	Each	550-81-30	Detector System, Video Processor in Rack, 6 Camera Inputs, 115VAC includes TS1 cable, manual, mouse, software, power cable and opto-isolated detector outputs. As Brand Name: Iteris Product #: VAN-BR61	$12,677.00
26	Each	550-81-30	Detector System, shelf mounted, video processor, 1 camera input, 115VAC includes TS1 cable, manual, mouse, software, power cable and opto-isolated detector outputs. As Brand Name: Iteris Product #: VAN-I1	$2,431.00
27	Each	550-81-30	Detector System, video processor, for rack mount, 1 camera input and opto-isolated detector outputs. As Brand Name: Iteris Product #: EDGE2-1CH	$2,370.00
28	Each	550-81-30	***Detector System, video processor, for rack mount, 2 camera input and opto-isolated detector outputs.*** As Brand Name: ***Iteris*** Product #: EDGE2-2CH	$4,024.00
29	Each	550-81-30	Detector System, Video processor extension module, for rack mount, 2 channel and opto-isolated detector outputs. As Brand Name: Iteris Product #: EXTMOD-2CH	$307.70
30	Each	550-81-30	Detector System, Video processor extension module, for rack mount, 4 channel and opto-isolated detector outputs. As Brand Name: Iteris Product #: EXTMOD-4CH	$346.00
31	Each	550-81-30	***Detector, color video camera, 8 outputs, 24 loop capable, with delay and extend timer, TS1/TS2*** As Brand Name: Iteris Product #: ***CAM-RZ4C***	$1,900.00

32	Each	550-81-30	***Detector, wide angle video camera, 8 outputs, 24 loop capable, with delay and extend timer, TS1/TS2*** As Brand Name: Iteris Product #: ***CAM-WA3***	$1,777.00
33	Each	550-81-30	***Lens Adjust Module, Video camera with display, with piggy back cable.*** As Brand Name: Iteris Product #: ***CAM VIEW***	$1,538.00
34	Each	550-81-30	Monitor, video camera input, B&W, 9 inch As Brand Name: ***BOSCH*** Product #: ***PB-LTC200990***	$143.00
35	Each	550-81-30	Cable Harness, SDLC, 3 foot length for EPAC Controller As Brand Name: Eagle Product #: ABW12071P036	$44.60
36	Each	550-81-30	D Module, SLDC Port 1, for EPAC Controller As Brand Name: Eagle Product #: AAD11707P003	$540.00
37	Each	550-81-30	Radio Master Kit. Complete with RF jumper cable; 3/8" cable connectors; 3/8" water tight radio cable; polyphaser surge protection;(2) 10DB Yagi antennas; SOP mounting bracket for steel or wood; D module w/2nd RS232 EPAC M30; cable modem EPAC 3101; power divider; radio and 13.8VDC power supply. As Brand Name: Eagle Product #: 150/5200-YAGI	$2,444.00
38	Each	550-81-30	Radio Master Kit. Complete with RF jumper cable; 3/8" cable connectors; 3/8" water tight radio cable; polyphaser surge protection;(2) 10DB Yagi antennas; SOP mounting bracket for steel or wood; “D” module w/2nd RS232 EPAC M30; cable modem EPAC 3101; power divider; radio and power cube; FSK cable. As Brand Name: Eagle Product #: 101/5100-YAGI	$2,905.00
39	Each	550-81-30	Power Divider, dual antenna mounting device. As Brand Name: ***ENCOM*** Product #: ***EP-SPLITTER***	$333.50
40	Each	550-81-30	***Connector***, Water Proof, 3/8” radio use, 100 ft. As Brand Name: Times Product #: TMC-EZ400NMH	$7.75
41	Each	550-81-30	“D” Option Board Assembly, for Eagle EPAC/EPIC Controllers, 2nd RS-232 As Brand Name: Eagle Product #: AAD11112P015	$207.75
42	Each	550-81-30	“D” Option Board Assembly, for Eagle MARC Master Controllers, 2nd RS-232 As Brand Name: Eagle Product #: AAD11112P033	$315.40

43	Each	550-81-30	***Cabinet Power Supply, shelf mount, 24V, TS2*** As Brand Name: ***EDI*** Product #: ***PS250***	$54.65
44	Each	550-81-30	Antenna, OMNI Directional, 3 DB Gain As Brand Name: Antenex Product #: AN-160	$104.40
45	Each	550-81-30	Antenna, OMNI Directional, ***7*** DB Gain As Brand Name: ***Maxrad*** Product #: ***MFB8967NF***	$196.55
46	Each	550-81-30	Antenna, OMNI Directional, 9 DB Gain As Brand Name: Scala Product #: 905-915	$1,031.00
47	Each	550-81-30	Antenna, YAGI Directional, 10 DB Gain As Brand Name: Scala Product #: ***TY900***	$197.70
48	Each	550-81-30	***Flasher, 24 hour, solar powered, dual beacon for square tube, round tube, pedestal or side of pole mount.*** As Brand Name: ***Carmanah*** Product #: ***R247***	$3,570.00
49	Each	550-81-30	***School Zone, Solar powered dual flashing beacon with time base control, pedestal, or side of pole mount.*** As Brand Name: ***Carmanah*** Product #: ***R829***	$3,847.00
50	Each	550-81-30	***Flasher, 24 hour, integrated, solar powered, red or yellow single beacon for square tube, round tube, pedestal or side of pole mount.*** As Brand Name: ***Carmanah*** Product #: ***R247C***	$2,400.00
51	Each	550-81-30	***School Zone, solar powered single flasher beacon assembly with time base control, pedestal or side of pole mount.*** As Brand Name: ***Carmanah*** Product #: ***R829C***	$2,893.00
52	Each	550-81-30	***Controller, traffic signal, with 24 circuit terminal facility, in 30" side of pole or base mount cabinet with plastic door, with 16 channel detector card rack with BIU and power supply. Cabinet painted inside and out.*** As Brand Name: Eagle Product #: ***EPAC3108M53/M30P***	$9,558.00
53	Each	550-81-30	***Controller, traffic signal, with 48 circuit terminal facility, in 44" base mount cabinet with plastic door, with 16 channel detector card rack with BIU and power supply. Cabinet painted inside and out.*** As Brand Name: Eagle Product #: ***EPAC3108M52/P44P***	$11,375.00
54	Each	550-81-30-2287	***Controller, Traffic signal timer mechanism only.*** As Brand Name: Eagle Product #: ***EPAC3108M52***	$2,447.00

55	Each	550-81-30	***Controller, Traffic signal, with 36 circuit terminal facility, in 36" base mount cabinet with plastic door, with 16 channel detector card rack with BIU and power supply. Cabinet painted inside and out.*** As Brand Name: Eagle Product #: ***EPAC3108M52/M36P***	$10,804.00
56	Each	550-81-30-2303	Controller, traffic signal, solid state, timer mechanism only, pre-timed, interval oriented. As Brand Name: Eagle Product #: EPIC141M01	$2,447.00
57	Each	550-81-30-7302	Socket, controller module, for PC642 lightning protector. As Brand Name: Edco Product #: PCB1B	$11.00
58	Each	550-81-34-6672	Relay, flash transfer, for use with NEMA traffic controllers, DPDT 20 amp contacts, encapsulated for dust-free operation. As Brand Name: ***Magnacraft*** Product #: ***W21ACPX-2***	$34.60
59	Each	550-81-51-7009	Monitors, traffic controller, signal sequence, 6 channel, NEMA type conflict/voltage, LCD display. As Brand Name: Eberle Design Inc. Product #: SSM-6LE	$533.35
60	Each	550-81-51-7207	Monitors, traffic controller, signal sequence, 12 channel, NEMA type conflict/voltage, LCD display. As Brand Name: Eberle Design Inc. Product #: SSM-12LE	$600.00
61	Each	550-81-79	Surge protector, PC-642 30V 111-0642 - data/signal, 30 volt, plug in module type. As Brand Name: Edco Inc. Product #: PC642 30V	$37.45
62	Each	550-81-79	Power supply, for card rack, 120 vac, model C800IS As Brand Name: ***EDI*** Product #: ***TS150***	$198.50
63	Each	550-81-79	Power Supply, Shelf Mount Video Processor, 1 Amp, 115VAC to 24 VDC. As Brand Name: Iteris Product #: PWRSPLY1	no bid
64	Each	550-81-79	Power Supply, Shelf Mount Video Processor, 2.5 Amp, 115VAC to 24VDC. As Brand Name: Iteris Product #: PWRSPLY2.5	no bid
65	Each	550-81-79	Surge Protector, video coaxial. As Brand Name: Edco Product #: CXI-05	$47.50
66	Each	550-81-79	Surge suppression, polyphaser In line. As Brand Name: Polyphaser Product #: IS-50NX-C2	$61.00

67	Each	550-81-79	Battery, 100 amp hour gell cell battery for use with solar charged systems. As Brand Name: RTC Product #: 173-100AH	$386.15
68	Each	550-81-79	Solar panel, 90 watt array, for use with solar charged, DC battery systems. As Brand Name: RTC Product #: 90WDCARY	$943.00
69	Each	550-81-79	Solar panel, 115 watt array, for use with solar charged, DC battery systems. As Brand Name: RTC Product #: 115WDCARY	$1,030.00
70	Each	550-81-79	Solar panel, 345 watt array, for use with solar charged, DC battery systems. As Brand Name: RTC Product #: 345WDCARY	$3,360.00
71	Each	550-81-79	Solar panel, 460 watt array, for use with solar charged, DC battery systems. As Brand Name: RTC Product #: 460WDCARY	$3,501.00
72	Each	550-81-79	Solar panel, 960 Watt array for use with solar charged, DC battery systems. As Brand Name: RTC Product #: 960WDCARY	$8,704.00
73	Each	550-81-79	Surge Protector for Traffic Signals, 8 Volt, Data/Signal, plug in Module type. As Brand Name: EDCO Inc. Product #: PC642 8V	$39.35
74	Each	550-82-55-1007	Cabinet, count station, “M”, 51 inch x 30 inch x 18 inch, door has corbin lock and no compartment switch, gray exterior and riser base, 2 shelves, back panel with two 15 amp circuit breakers, one GFI duplex, surge arrestor and ground bus, lamp base, 250 watt heater with fan and thermostat. As Brand Name: Eagle Product #: EL702BMCS	$3,077.00
75	Each	550-82-55-1056	Cabinet, count station, “P”, 56 inch x 44 inch x 27.5 inch; door has corbin lock and no compartment switch; gray exterior and riser base. Includes two shelves, back panel with two 15 amp circuit breakers, one GFI duplex, surge arrestor and ground bus, lamp base, 250 watt heater with fan and thermostat. As Brand Name: Eagle Product #: EL712BMCS	$3,385.00
76	Each	550-85-47	Shaft, Traffic Signal Pedestal, pedestrian support, 8 foot extruded aluminum pole (shaft) As Brand Name: Pelco Product #: PB5100-08- PNC	$139.10

77	Each	550-85-47	Shaft, Traffic Signal Pedestal, pedestrian support, 9 foot extruded aluminum pole (shaft) As Brand Name: Pelco Product #: PB5100-09-PNC	$155.00
78	Each	550-85-47	Shaft, Traffic Signal Pedestal, pedestrian support, 11 foot extruded aluminum pole (shaft) As Brand Name: Pelco Product #: PB5100-11 PNC	$190.75
79	Each	550-85-47	Shaft, Traffic Signal Pedestal, pedestrian support, 15 foot extruded aluminum pole (shaft) As Brand Name: Pelco Product #: PB5100-15 PNC	$259.50
80	Each	550-85-47	Shaft, Traffic Signal Pedestal, pedestrian support, 16 foot extruded aluminum pole (shaft) As Brand Name: Pelco Product #: PB5100-16 PNC	$276.00
81	Each	550-85-47	Base, Square Pedestal, pedestrian support, aluminum w/grounding lug & set screw. As Brand Name: Pelco Product #: SP-5326-PNC	$131.00
82	Each	550-85-47	Base, Octagonal Pedestal, pedestrian support, aluminum w/grounding lug & set screw. As Brand Name: Pelco Product #: PB-5344-PNC	$114.00
83	Each	550-85-47-0502	Traffic Signal Pedestal, pedestrian support, with ***10*** foot extruded aluminum pole (shaft), with anchor bolts and nuts. As Brand Name: Pelco Product #: PB5301, ***PB5100-10***	$333.95
84	Each	550-85-56	Traffic signal tapered pole, steel, 14 foot length, hand hole, cover, anchor base and anchor bolts; 12.75 inch base bolt circle and 4.5 inch diameter pole top. Per 1994 AASHTO Standards. As Brand Name: Pelco Product #: AP02-14-12.75	$1,450.00
85	Each	550-85-56-5806	Traffic signal strain pole, steel, 30 foot length, with top cap, hand holes, covers, anchor base and anchor bolts, shall include 4 anchor bolts per pole. Per ***2001*** AASHTO Standards. As Brand Name: ***Union Metal*** Product #: ***30***	$2,835.00
86	Each	550-85-56-6309	Traffic signal strain pole, steel, 36 foot length, with top cap, hand holes, covers, anchor base, and anchor bolts, shall include 4 anchor bolts per pole. Per ***2001*** AASHTO Standards. As Brand Name: ***Union Metal*** Product #: ***36***	$4,030.00
87	Each	550-85-56-6507	Traffic signal strain pole, steel, 40 foot length, with top cap, hand holes, covers, anchor base and anchor bolts, shall include 4 anchor bolts per pole. Per ***2001*** AASHTO Standards. As Brand Name: ***Union Metal*** Product #: ***40***	$6,470.00

88	Each	550-85-69	Anchor Bolt, Pedestal Base, 0.75 inch X 18 inch X 3.5 inch; set of four (4) bolts with washers and nuts. As Brand Name: ***AA Anchor Bolt*** Product #: ***157-1001***	$30.00
89	Each	550-85-69	Anchor Bolt, Mast Arm Foundation, 1.75 inch diameter x 114 inch x 6 inch. Set of four (4) bolts with washers and nuts. As Brand Name: ***AA Anchor bolt*** Product #: ***157-1024***	$712.25
90	Each	550-85-69	Anchor Bolt, Steel Pole base, 1.125"X30"X5"; set of (4) bolts with washer and nuts. As Brand Name: Pelco Product #: 103-1.125X30X5	$98.10
91	Each	550-85-69	Reinforcing Collar, aluminum ***square*** base and shaft reinforcing collar. As Brand Name: Pelco Product #: PB-5325-ALO	$56.10
92	Each	550-85-69	Clamp, pole strain, 8.5 inch diameter. For use with steel strain poles. As Brand Name: Pelco Product #: AP-1054-GLV	$91.50
93	Each	550-85-69	Clamp, pole strain, 9.5 inch diameter. For use with steel strain poles. As Brand Name: Pelco Product #: AP-1055-GLV	$91.50
94	Each	550-85-69	Anchor bolt, steel strain pole, 1.75 in. diameter x 114 in. x 6 in. As Brand Name: ***AA Anchor Bolt*** Product #: ***157-1022***	$716.75
95	Each	550-85-69-1263	Clamp, pole strain, 7.5 inch diameter. For use with steel strain poles. As Brand Name: Pelco Product #: AP-1023-GLV	$91.50
96	Each	550-85-69-1271	Clamp, pole strain, 10.75 inch diameter. For use with steel strain poles. As Brand name: Pelco Product #: AP-1056-GLV	$91.50
97	Each	550-88-13-1002	Cabinet, flasher, weatherproof, cast aluminum, weather tight seal around all doors for maximum protection, smooth exterior surface, lock for doors with two keys, painted aluminum, no holes, minimum inside dimension to be 10-3/16 inch width by 13-11/16 inch height by 6-21/32 inch depth. As Brand Name: Temple Product #: EL-240	$178.60
98	Each	550-88-14	Cable, Micro-loop lead-in, 2 pair 18 AWG. As Brand Name: ***Global Traffic Technologies*** Product #: CC30003	$0.45
99	Each	550-88-14	Power Jumper Cable, 18 inch, video camera w/connector As Brand Name: Iteris Product #: PIGTAILN	$38.50

100	Each	550-88-14	Power Take Off, Video Camera, Luminaire w/arrestor. Brand Name: Iteris Product #: LUMRPT01	$156.25
101	Each	550-88-14	Connector, with 12 pins, and shell. Brand Name: Iteris Product #: DEUTSCHCONN	$107.15
102	Each	550-88-14	Cable, Video coaxial, 8281, 500 foot reel. Brand Name: Belden Product #: B-8281	$300.00
104	Each	550-88-14	Cable, Video camera combination power and coaxial, 500 foot reel. Brand Name: ***King Wire*** Product #: ***16-03PV***	$594.00
105	Each	550-88-14	Cable, Video camera combination power and coaxial, 1,000 foot reel. Brand Name: ***King Wire*** Product #: ***16-03PV***	$1,190.00
106	Each	550-88-14	Jumper Cable, polyphaser to radio. As Brand Name: ***Alcom*** Product #: ***58UX-NMTL-72***	$23.20
107	Each	550-88-14	Cable, Water Proof, 3/8" radio use, 100 ft. As Brand Name: Times Product #: LMR-400DB	$91.85
108	Each	550-88-14	Cable harness, RS-232 radio to controller. As Brand Name: ***Carrier & Gable*** Product #: EPAC/EPIC/RADIO	$43.25
109	Each	550-88-14	Cable Harness, FSK Radio to Comm. Panel. As Brand Name: ***Carrier & Gable*** Product #: D OPTION PANEL/RADIO	$36.00
110	Each	550-88-14	Traffic signal bracket only mounting assembly, 12 inch top, 3 section, 1W3C Mast Arm Mount, Astro-Brac with 46 inch gusset tube, clamp kit and vinyl insert and end cap. As Brand Name: Pelco Product #: AB1W3CMA	$116.90
111	Each	550-88-14	Traffic signal bracket only mounting assembly, 12 inch top, 4 section 1W3C with 12X27 case sign, Mast Arm Mount, Astro-Brac with 58 inch gusset tube, clamp kit and vinyl insert and end cap. As Brand Name: Pelco Product #: AB1W4CCSMA	$138.50
112	Each	550-88-14	Traffic signal bracket only mounting assembly, 12 inch top, 5 section (dog house) 1W5C, Mast Arm Mount, Astro-Brac with 46 inch gusset tube, clamp kit and vinyl insert and end cap. As Brand Name: Pelco Product #: AB1W5CMA	$201.00
113	Each	550-88-14	Traffic signal bracket only mounting assembly, 12 inch top, 5 section (dog house) 1W5C with 12X27 case sign, Mast Arm Mount, Astro-Brac with 58 inch gusset tube, clamp kit and vinyl insert and end cap. As Brand Name: Pelco Product #: AB1W5CCSMA	$207.15

114	Each	550-88-14	Traffic signal ***bracket*** and mounting assembly, 12 inch top-short, 5 section (dog house). As Brand Name: Pelco Product #: SE-5059-P29	$48.70
115	Each	550-88-14	Traffic signal bracket and mounting assembly, 12 inch top-long, 5 section (dog house) ***unfinished.*** As Brand Name: ***Engineered Castings*** Product #: ***2022-XL UNF***	$98.65
116	Each	550-88-14	Traffic signal bracket and mounting assembly, 12 inch bottom-short, 5 section (dog house). As Brand Name: Pelco Product #: SE-5060-P29	$21.00
117	Each	550-88-14	Traffic Signal Bracket and mounting assembly, 12 inch bottom-short, 5 section (dog house) for use with center stud, ***unfinished***. As Brand Name: ***Engineered Castings*** Product #: ***2023UNF***	$45.00
118	Each	550-88-14	Traffic Signal Bracket and mounting assembly, 12 inch bottom-long, 5 section (dog house) for use with center stud, ***unfinished***. As Brand Name: ***Engineered Castings*** Product #: ***2020-XL-UNF***	$31.95
119	Each	550-88-14	Traffic signal bracket and mounting assembly, 12 inch T Bottom, 5 section (dog house) ***for use with integral spacer, unfinished.*** As Brand Name: ***Engineered Castings*** Product #: ***2033-TEE-UNF***	$66.70
120	Each	550-88-14	Traffic Signal Bracket and mounting assembly, spacer bracket, 5 section (dog house). As Brand Name: Cost Cast Product #: 19812 YEL	$26.70
121	Each	550-88-14	Traffic signal bracket and mounting assembly, 12 inch top and bottom, brackets only, 2WSA with center stud attachment for A6 mount. As Brand Name: Pelco Product #: SPA6MI	$193.35
122	Each	550-88-14	Brackets only, 12 inch, 1W Pedestrian As Brand Name: Pelco Product #: PMPS B2M	$82.10
123	Each	550-88-14	Cable Guide, for U1169 Pole Foot As Brand Name: Pelco Product #: 103-7867	$3.50
124	Each	550-88-14	Pinnacle, color yellow As Brand Name: Eagle Product #: BK01	$7.90
125	Each	550-88-14	Pole foot, 4” pole, black, for steel posts As Brand Name: Pelco Product #: 103-7669	$9.75

126	Each	550-88-14-1001	Traffic signal Bracket and mounting assembly, 8 inch bottom, 2WSA As Brand Name: Pelco Product #: SP-1030-MI	$11.15
127	Each	550-88-14-1050	Traffic Signal Bracket and Mounting assembly, 8 inch bottom 3WSA As Brand name: Pelco Product #: SP-1033-MI	$19.95
128	Each	550-88-14-1100	Traffic Signal Bracket and Mounting assembly, 8 inch bottom 4WSA As Brand name: Pelco Product #: SP-1019-MI	$24.80
129	Each	550-88-14-1506	Traffic Signal Bracket and Mounting assembly, 12 inch bottom 2WSA As Brand name: Pelco Product #: SP1011-MI	$11.75
130	Each	550-88-14-1555	Traffic Signal Bracket and Mounting assembly, 12 inch bottom 3WSA As Brand name: Pelco Product #: SP-1014-MI	$22.15
131	Each	550-88-14-1605	Traffic Signal Bracket and Mounting assembly, 12 inch bottom 4WSA As Brand name: Pelco Product #: SP-1008-MI	$24.15
132	Each	550-88-14-3007	Traffic Signal Bracket and Mounting assembly, 8 inch top 2WSA As Brand name: Pelco Product #: SP-1029-MI	$76.15
133	Each	550-88-14-3056	Traffic Signal Bracket and Mounting assembly, 8 inch top 3WSA As Brand name: Pelco Product #: SP-1032-MI	$92.40
134	Each	550-88-14-3106	Traffic Signal Bracket and Mounting assembly, 8 inch top 4WSA As Brand name: Pelco Product #: SP-1018-MI	$112.70
135	Each	550-88-14-3502	Traffic Signal Bracket and Mounting assembly, 12 inch top 2WSA As Brand name: Pelco Product #: SP-1010-MI	$72.60
136	Each	550-88-14-3551	Traffic Signal Bracket and Mounting assembly, 12 inch top 3WSA As Brand name: Pelco Product #: SP-1013-MI	$94.60
137	Each	550-88-14-3601	Traffic Signal Bracket and Mounting assembly, 12 inch top 4WSA As Brand name: Pelco Product #: SP-1007-Mi	$115.60

138	Each	550-88-17	***Splice Box, Aluminum, weather tight seal around door with mounting brackets, terminal strips and (2) neutral bussbars.*** As Brand Name: ***Mid Michigan Fabrication*** Product #: ***73-5001***	$622.75
139	Each	550-88-17	Bracket, pole mounting for traffic cabinets, aluminum for banding or lag bolt mount to steel/wood poles. As Brand Name: Pelco Product #: SE-0126-ALO	$12.40
140	Each	550-88-17	Hardware packet, for cabinet bracket, pole mounting for traffic cabinets, mounting to steel/wood poles. As Brand Name: Eagle Product #: MICH/POLE/PLT/HDWR.A0051	$4.00

141	Each	550-88-17	Cabinet, traffic signal controller, 24 circuit det; M36 plastic door, gray det; cabinet does not include plug-ins. As Brand Name: ***Eagle*** Product #: ***M36EPICM2124CKT***	$4,200.00
142	Each	550-88-17	Cabinet, traffic signal controller, 36 circuit det., M36 plastic door gray det, cabinet does not include plug ins. As Brand Name: ***Eagle*** Product #: M36EPICM0136CKT	$4,867.00
143	Each	550-88-17	***Cabinet, traffic signal, NEMA-6 Size, paint gray outside and white inside with 16 load bay and 18 channel monitor.*** As Brand Name: Eagle Product #: TF-40161M101	$5,867.00
144	Each	550-88-17	Conflict monitor, 18 channel As Brand Name: EDI, Inc. Product #: SSM-18L	$1,668.00
145	Each	550-88-17	Cabinet, 16 load switch control, complete with new arrestor, power panel and field terminals, painted inside and out, base mount P-cabinet, with rack. As Brand Name: Eagle Product #: TF-4016-TM101	$10,885.00
146	Each	550-88-17	Traffic controller, no display, VME Buss or software. As Brand Name: Eagle 2070L Product #: AAZ14068P012	$2,800.00
147	Each	550-88-17	ASYNC Serial Comm Module, EIA 232, for direct connect As Brand Name: Eagle 2070-7A Product #: AAD13982P001	$360.00
148	Each	550-88-17	Module, EIA-485 As Brand Name: Eagle 2070-7B Product #: AAD13929P001	$374.00
149	Each	550-88-17	Field Input/Output module, old messages As Brand Name: Eagle 2070-2 Product #: AAD14081P1001	$700.00
150	Each	550-88-17	Transition Assembly As Brand Name: Eagle 2070-1 TB Product #: AAD11947P002	$366.70

151	Each	550-88-17	CPU Assembly As Brand Name: Eagle 2070-1 MCB VME Product #: AAD13981P001	$366.70
152	Each	550-88-17	Power supply, 2070 standard As Brand Name: Eagle 2070-4 Product #: AAD11944P001	$593.35
153	Each	550-88-17	Front panel, blank with C60 computer connector, no LCD Display, No Keyboard. As Brand Name: Eagle Product #: AAD14172P003	$233.40
154	Each	550-88-17	Cabinet, to include: flash transfer relay, (2) SHA-1250 surge arrestors, 206C power supply, 208 current monitor, ODA #3, and (3) load switches. As Brand Name: Eagle 334C Product #: EL3/ITS	$10,874.00
155	Each	550-88-17	Input File Assembly As Brand Name: Eagle Product #: 8030-102224	$486.75
156	Each	550-88-17	Communications panel As Brand Name: Eagle Product #: 332-1012.1	$46.75
157	Each	550-88-17	Drawer Assembly As Brand Name: Eagle Product #: D400-4	$133.35
158	Each	550-88-17	Cabinet, to include: flash transfer relay, (2) SHA-1250 surge arrestors, 206C power supply, 208 current monitor, ODA #3 and (3) load switches. As Brand Name: Eagle 336C Product #: EL3/ITS	$9,334.00
159	Each	550-88-17	Drawer Assembly As Brand Name: Eagle Product #: D400-1	$133.35
160	Each	550-88-17-1008	Cabinet, NEMA type enclosure, aluminum, 14 inch width x 16 inch height x 12 inch depth. As Brand Name: ***Mid Michigan Fabricators*** Product #: SM161412	$593.00
161	Each	550-88-33	Flasher Assembly, NEMA Assembly to include the flasher panel and circuit breakers in an EL240 flasher cabinet. (Must still add NEMA flasher for complete assembly). As Brand Name: Temple Product #: EP100MDOT	$338.75
162	Each	550-88-33	Flasher, 2 circuit, DC Voltage As Brand Name: RTC Product #: DCF2	$142.90
163	Each	550-88-33	Flasher, traffic signal, 2 circuit, cap type, green, MOV As Brand Name: Traffic Sensor Corp. Product #: CF-2F	$48.70

164	Each	550-88-33-5009	Flasher, traffic signal, solid state, NEMA type 1, ***flashers shall be designed for use in automobile traffic signal controllers in accordance with current NEMA standard and FHWA standards, using the latest technologies, each flashing circuit shall contain zero voltage switching, A 25 amphere power triac, A snubber, A light emitting diode across the A.C. circuitry directly indicating the A.C. load activated and A metal oxide varistor (MOV).*** As Brand Name: TSC Product #: ***204-15***	$21.20
165	Each	550-88-50-1501	Louvers, traffic signal, 12 inch, 24 degree, aluminum, for 12 inch poly traffic signal head. As Brand Name: National Sign & Signal Product #: RL27	$61.50
166	Each	550-88-50-1550	Louvers, traffic signal, 12 inch, geometrically programmed, for 12 inch poly traffic signal head. As Brand Name: Pelco Product #: G1-1012	$186.00
167	Each	550-88-56	Bracket, Universal camera mount, SOP or camera arm mountable. As Brand Name: Iteris Product #: CAMBRKT4	$76.95
168	Each	550-88-56	Bracket, Mast arm camera mount, includes camera mount bracket, 74 inch gusset tube and astro-brac clamp kit. As Brand Name: Pelco Product #: 103/9150	$133.25
169	Each	550-88-56	Antenna Mounting Kit, ***Mast arm mount.*** As Brand Name: Pelco Product #: ***Radio Mast***	$103.00
170	Each	550-88-56	Antenna Mounting Kit, ***Side of pole mount.*** As Brand name: Pelco Product #: ***103-Radio SOP***	$65.00
171	Each	550-88-56	Traffic signal mast arm, steel, clamp on, 30 foot length, with end cap, clamp plate and clamp bolts. Per 1994 AASHTO Standards. As Brand Name: Pelco Product #: SMARMGVHH-300	$2,135.00
172	Each	550-88-56	Traffic signal mast arm, steel, clamp on, 40 foot length, with end cap, clamp plate and clamp bolts. Per 1994 AASHTO Standards. As Brand Name: ***Union Metal*** Product #: SMARMGVHH-400	$2,535.00
173	Each	550-88-56	Traffic Signal Mast Arm, steel, clamp on, 50 foot length, with end cap, clamp plate and clamp bolts. Per 1994 AASHTO Standards. As Brand Name: ***Union Metal*** Product #: SMARMGVHH-500	$3,054.00
174	Each	550-88-56	Truss arm, 18 foot for steel pole, w/U-bolts, galvanized steel. As Brand Name: Utility Metals Product #: C200S180SBX	$557.50

175	Each	550-88-56	Truss Arm, 15 foot for steel pole, w/U-bolts, galvanized steel. As Brand Name: Utility Metals Product #: C200S150SBX	$497.50
176	Each	550-88-56	Truss Arm, 12 foot for steel pole, w/U-bolts, galvanized steel. As Brand Name: Utility metals Product #: C200S120SBX	$473.50
177	Each	550-88-56	Truss Arm, 9 foot for steel pole, w/U-bolts, galvanized steel. As Brand Name: Utility metals Product #: C200S090SBX	$424.00
178	Each	550-88-56	Truss Arm, 6 foot for steel pole, w/U-bolts, galvanized steel. As Brand Name: Utility Metals Product #: C200S060SBX	$397.40
179	Each	550-88-56	Truss Arm, 18 foot for wood pole, galvanized steel. As Brand Name: Utility Metals Product #: C200S180SBX	$484.00
180	Each	550-88-56	Truss Arm, 15 foot for wood pole, galvanized steel. As Brand Name: Utility Metals Product #: C200S180SBX	$424.00
181	Each	550-88-56	Truss Arm, 12 foot for wood pole, galvanized steel. As Brand Name: Utility Metals Product #: C200S180SBX	$384.00
182	Each	550-88-56	Truss Arm, 9 foot for wood pole, Galvanized steel. As Brand Name: Utility Metals Product #: C200S180SBX	$351.00
183	Each	550-88-56	Truss Arm, 6 foot for wood pole, galvanized steel. As Brand Name: Utility Metals Product #: C200S180SBX	$324.00
184	Each	550-88-56	Flange, for pole mounting cabinet to 4.5 inch pole, 2-bolt. As Brand Name: Pelco Product #: SE-0425	$11.75
185	Each	550-88-56	Applicator Gun, for ply pack 3M Loop Sealant As Brand Name: 3M Product #: 151-1005	$140.85
186	Each	550-88-56	Applicator Gun, for ply pack, 3M loop sealant As Brand Name: Albion Product #: 173-1006	$182.75
187	Each	550-88-56-0796	Pedestrian signal Bracket Assembly, post top, 4 inch mounting with 1.5 hub. As Brand Name: Pelco Product #: SP-2008-MI, SE-3064	$49.10
188	Each	550-88-56-0804	Pedestrian signal bracket set, consisting of 1 upper arm and 1 lower arm for 12 inch signals, 1W2C BA As Brand Name: Pelco Product #: SP-1020-MI, SP-1002-MI	$56.75
189	Each	550-88-56-0812	Pedestrian signal bracket set, consisting of 1 upper arm and 1 lower arm for 12 inch signals, 2W2C As Brand Name: Pelco Product #: SP-1023-MI, SP-1024-MI	$112.30

190	Each	550-88-56-0820	Pedestrian signal bracket set, consisting of 1 upper arm and 2 lower arms for 12 inch signals, 2W2C D2M As Brand Name: Pelco Product #: SP-1035-MI, SP-1020-MI	$130.40
191	Each	550-88-56-0838	Pedestrian signal bracket set, consisting of 1 upper arm and 1 lower arm for 12 inch signals, 2W2C TBA Brand Name: Pelco Product #: SP-1004-MI	$138.00
192	Each	550-88-56-1406	Clamp, cable, suspension, replacement part (do not substitute). As Brand Name: Eagle Product #: KA6-3	$21.55
193	Each	550-88-56-1505	Fittings, Entrance, multi-way, replacement part (do not substitute). As Brand Name: Eagle Product #: BK140-10A	$38.50
194	Each	550-88-56-1521	Fitting, entrance, one way As Brand Name: Eagle Product #: BK130-10AY	$46.15
195	Each	550-88-56-1554	Flange, for pole mounting, 1.5 inch horizontal threaded hub and downward, 1.25 inch threaded hub for wire entrance or conduit, cast aluminum, for use with 1 inch to .75 inch steel bands, flat black or bright green. As Brand Name: Eagle Product #: U1158	$18.27
196	Each	550-88-56-4509	Mounting strap, ***wood*** pole, with lag screws, bolts and nuts (to fit all sizes of wooden poles). Brand Name: Eagle Product #: UL23	$26.80
198	Each	550-88-76-2004	Pedestrian Signal, incandescent type, polycarbonate, 1W2C 12” As Brand Name: Eagle Product #: SA302BMICH	$138.75
199	Each	550-88-78	Vehicular traffic signal, polycarbonate, 12 inch, 1W1C, Amber, 12 volt DC LED As Brand Name: Eagle Product #:	$228.40
200	Each	550-88-78	Vehicular traffic signal, 12 inch, 1W1C, Amber, 12 volt DC LED Insert Module As Brand Name: Dialight Product #: 4313230005	$185.00
201	Each	550-88-78-1004	Vehicular traffic signal, polycarbonate, 8 inch, 1W1C, in the following colors: 50% Amber, 50% Red 191. As Brand Name: Eagle Product #: SA110A/BMICH	$45.00
202	Each	550-88-78-1251	Vehicular traffic signal, polycarbonate, 8 inch, 1W3C, Green, Amber, Red #191 As Brand name: Eagle Product #: SA130AMICH	$125.00

203	Each	550-88-78-1509	Vehicular traffic signal, polycarbonate, 12 inch, 1W1C, in the following colors: 50% Amber, 50% Red #191 As Brand Name: Eagle Product #: SA101A/BMICH	$56.25
204	Each	550-88-78-1558	Vehicular traffic signal, polycarbonate, 12 inch, 1W3C, Green, Amber, Red #191. Brand Name: Eagle Product #: SA103AMICH	$152.50
205	Each	550-88-80	Signals, vehicular, aluminum, 12 inch, yellow body, 1W3C, ***electronic steerable beam LED with Black tunnel visor.*** As Brand Name: ***Intelight*** Product #: ***ESB3022LCGB***	$2,231.00
206	Each	550-88-80	Signal visor, tunnel style, vehicular, polycarbonate, 12 inch, Yellow. As Brand Name: Eagle Product #: A70012004	$10.75
207	Each	550-88-80	Signal visor, tunnel style, pedestrian, polycarbonate, 12 inch, Black. As Brand Name: Eagle Product #: PDM538	$12.00
208	Each	550-88-80-1000	Signals, vehicular, aluminum, 12 inch, Yellow body, 1W1C, Amber lens, tunnel visor attached. Brand Name: Eagle Product #: SIG101B	$77.50
209	Each	550-88-80-1109	Signals, vehicular, aluminum, 12 inch, Yellow ***body***, 1W1C, Red lens, tunnel visor attached. Brand Name: Eagle Product #: SIG101A	$77.50
210	Each	550-88-80-1158	Signals, Vehicular, aluminum, 12 inch, Yellow body, 1W3C, Red, Amber, Green lens, tunnel visor attached. Brand Name: Eagle Product #: SIG103A	$203.75
214	Each	550-88-92	Radio Receiver School Zone Kit w/1-10 DB Yagi Antenna; power cube; SOP bracket for steel or wood; RF jumper cable; 3/8” cable connectors; 3/8’ water tight radio cable; polyphaser surge protection; radio. As Brand Name: ENCOM Product #: ***Compac I/08/Yagi***	$2,493.10
215	Each	550-88-92	Radio Transceiver, FSK with RS-232 & RS-485 Capable; spread spectrum unlicensed frequencies. As Brand Name: Encom Product #: 150/5100	$1,928.00
216	Each	550-88-92	Radio Transceiver, RS-232 & RS-485 capable; spread spectrum unlicensed frequencies. As Brand Name: Encom Product #: 150/5200	$1,295.00
218	Each	550-88-92-1006	Receiver, tone, Decoder, School, 565 HZ As Brand Name: IDC Product #: TR-2500	$855.75

219	Each	550-88-93	Radio Xmitter School Zone Kit w/1 – 3 DB OMNI Antenna; power cube; SOP bracket for steel or wood; RF Jumper cable; 3/8" cable connectors; 3/8" water tight radio cable; polyphaser surge protection; radio As Brand Name: ENCOM Product #: ***I/08 OMNI***	$2,242.90
220	Each	550-88-93	Radio ***Transceiver***, contact closure, 8 inputs, spread spectrum unlicensed frequencies. As Brand Name: ENCOM Product #: ***COMMPAK I/08***	$1,855.00
221	Each	550-88-93	Radio Secondary MDL 5100 with 10DB Yagi antenna, FSK cable, power cube, jumper cable, polyphaser, antenna cable, cable connectors, mounting brackets. As Brand Name: Eagle Product #: 150-5100	$2,486.00
222	Each	550-88-93	Radio Secondary MDL 5200 with 10DB Yagi Antenna, RS-232 Cable, Power Supply, jumper cable, polyphaser, antenna cable, cable connectors, mounting brackets, 2nd RS-232 "D" module for controller. As Brand Name: Eagle Product #: 150/5200	$1,903.35
223	Each	550-88-93	Paging time clock reset circuit software: CPRII software, used in conjunction with a dedicated computer and an outside line, for dialing up the paging system and broadcasting time sync page to all the local units that would be mounted in the controller cabinet. As Brand Name: RTC Manufacturing Product #: CPRIII software	$607.69
224	Each	550-88-93	Paging time clock reset circuit verify unit: Used in Conjunction with the software and a dedicated computer with an outside line. This unit is responsible for verifying that the pages have been sent. As Brand Name: RTC Manufacturing Product #: ***CPR3102*** Verify Unit	$723.10
225	Each	550-88-93	Paging time clock reset circuit field device: CPRII pager time clock with antenna, which is mounted in the traffic controller cabinet, is to provide once a week resetting of the controllers time clock. As Brand Name: RTC manufacturing Product #: ***CPR3102*** Field Unit	$723.10
226	Each	550-88-93	Paging time clock reset circuit pager service: A once a year fee for pager service for the paging time clock reset circuit. As Brand Name: RTC manufacturing Product #: YPS365	obsolete
227	Each	550-88-93-1005	Transmitter, tone, encoder, school, 565 HZ As Brand Name: IDC Product #: TT-2500	$572.90

228	Each	550-89-62-1605	Cover, H.D., 23.3” x 13” x 2”, logo shall be traffic signal, color gray. As Brand Name: Quazite Product #: PG1324 T.S.	$146.50
229	Each	550-89-62-1654	Cover, H.D. 30.2A x 17.2A x 2 inch, Logo to be traffic signal, color gray. As Brand Name: Quazite Product #: PG1730 T.S.	$168.10
230	Each	550-89-62-7602	Socket casting, NEMA, for use with NEMA flashers. As Brand Name: Traffic Sensor Corp. Product #: 124-1003	$15.20
231	Each	550-91-55	Arrestor, 120 Volt AC, Pluggable, for use in cabinet main power panel. As Brand Name: ***Atlantic Scientific*** Product #: ***AONEIT***	$213.50
232	Each	550-91-55	Base mount, for pluggable arrestor, 120 volt AC, for use in cabinet main power panel. As Brand Name: ***Atlantic Scientific*** Product #: ***ZONEIT-BASE***	$106.00
233	Each	550-91-55-0404	Arrestor, loop surge, for use on vehicle loop detector lead-ins. As Brand Name: EDCO Product #: SRA6LCA916	$14.00
234	Each	550-91-55-7508	Detector Loop Sealant, 1 part, approximately 1 liter per ply pack, 12 ply packs per case. As Brand Name: 3M Product # 78-8095-4063-2	$192.00
235	Each	550-91-55-7508	Detector Loop Sealant, 1 part, approximately 5 gallons per pail. As Brand Name: 3M Product #: 78-8072-0724-2	$167.75
236	Each	550-91-60	Loop Detector, Digital, ***single channel, with harness, shelf mount.*** As Brand Name: ***EDI*** Product #: ***LM301T***	$118.60
237	Each	550-96-52-0501	Arrow Mask, black aluminum, for use w/12 inch poly lens. As Brand Name: Eagle Product #: PBL286	$7.90
238	Each	550-88-56	Traffic Signal Mast Arm, Steel, clamp on, 40’ length with end caps, clamp plate, and clamp bolts. Per 2001 AASHTO Standards. As Brand Name: Union Metal Product #: ***50303-B156-Y7***	$9,115.00
239	Each	550-88-56	Traffic Signal Mast Arm, Steel, clamp on, 50’ length with end caps, clamp plate, and clamp bolts. Per 2001 AASHTO Standards. As Brand Name: Union Metal Product #: ***50303-B156-Y9***	$11,200.00
240	Each	550-88-56	Traffic Signal Mast Arm, Steel, clamp on, 30’ length with end caps, clamp plate, and clamp bolts. Per 2001 AASHTO Standards. As Brand Name: Union Metal Product #: ***50303-B156-Y5***	$8,985.00

241	Each	550-88-56	Traffic Signal Mast Arm, Steel, clamp on, 45' length with end cap, clamps and bolts. Per 2001 AASHTO Standards. As Brand Name: Union Metal Product #: ***50303-B156-Y8***	$9,125.00
242	Each	550-88-56	Traffic Signal Mast Arm Standard, Steel, 23' with top cap, hand holes and covers. As Brand Name: Union Metal Product #: ***50303-B156-Y1***	$5,465.00
243	Each	550-88-56	Traffic Signal Mast Arm Standard, Steel, 29' with top cap, hand holes and covers. As Brand Name: Union Metal Product #: ***50303-B156-Y2***	$6,940.00
244	Each	550-85-69	Anchor Bolt, mast arm foundation, 2.00 inch diameter x 192 inch x 6 inch. Set of four (4) bolts with two (2) nuts and two (2) washers each. As Brand Name: ***AA Anchor bolt*** Product #: 2X192X6MA	$1,770.00
245	Each	550-85-69	Anchor Bolt, mast arm foundation, 2.00 inch diameter x 159 inch x 6 inch. Set of four (4) bolts with two (2) nuts and two (2) washers each. As Brand Name: ***AA Anchor bolt*** Product #: 2X159X6MA	$1,660.00
246	Each	550-85-69	Anchor Bolt, mast arm foundation, 2.00 inch diameter x 219 inch x 6 inch. Set of four (4) bolts with two (2) nuts and two (2) washers each. As Brand Name: ***AA Anchor bolt*** Product #: 2X219X6MA	$1,895.00
247	Each	550-85-69	Anchor Bolt, mast arm foundation, 2.00 inch diameter x 183 inch x 6 inch. Set of four (4) bolts with two (2) nuts and two (2) washers each. As Brand Name: ***AA Anchor bolt*** Product #: 2X183X6MA	$1,710.00
248	Each	550-88-78	LED Signal in Housing. Signal, Poly, 12", Red LED As Brand Name: Dialight Product #: ***101-4810XL***	$89.65
249	Each	550-88-78	LED Signal in Housing. Signal, Poly, 12", Yellow LED As Brand Name: Dialight Product #: ***101-4821XL***	$113.40
250	Each	550-88-78	LED Signal in Housing. Signal, Poly, 12", Green LED As Brand Name: Dialight Product #: ***101-4830XL***	$104.65
251	Each	550-88-78	LED Signal in Housing. Signal, Poly, 12", ***Red, Yellow, Green LED*** As Brand Name: Dialight Product #: ***101-4802XL***	$291.45
252	Each	550-88-78	LED Signal in Housing. Signal, Poly, 12", Red, Amber Arrow, Green Arrow LED As Brand Name: Dialight Product #: ***101-4803XL***	$278.95

253	Each	550-88-78	LED Signal in Housing. Signal, Poly, 12”, ***Yellow, Green, LED*** As Brand Name: Dialight Product #: ***101-4849XL***	$211.25
254	Each	550-88-78	LED Signal in Housing. Signal, Poly, 12”, ***Yellow Arrow, Green Arrow, LED*** As Brand Name: Dialight Product #: ***101-4852XL***	$198.75
255	Each	550-88-78	LED Signal in Housing. Signal, Alum., 12”, Red LED As Brand Name: Dialight Product #: ***101-4851XL***	$112.50
256	Each	550-88-78	LED Signal in Housing. Signal, Poly, 12”, Green Arrow, Left, LED As Brand Name: Dialight Product #: ***101-4890XL***	$104.65
257	Each	550-88-78	LED Signal in Housing. Signal, Poly, 12”, Green Arrow, Right, LED As Brand Name: Dialight Product #: ***101-4892XL***	$104.65
258	Each	550-88-78	LED Signal in Housing. Signal, Aluminum, 12”, ***Yellow LED*** As Brand Name: Dialight Product #: ***101-4857XL***	$136.25
259	Each	550-88-78	LED Signal in Housing. Signal, Aluminum, 12”, ***Red/Yellow/Green LED*** As Brand Name: Dialight Product #: ***101-4855XL***	$356.25
260	Each	550-88-78	LED Signal in Housing. Signal, Poly, 12”, Pedestrian LED, Hand/Man Filled As Brand Name: Dialight Product #: ***101-6801XL***	$185.63
261	Each	550-88-78	LED 12” Red Insert As Brand Name: Dialight Product #: ***132-1000XL***	$47.50
262	Each	550-88-78	LED 12” ***Yellow Insert*** As Brand Name: Dialight Product #: ***132-2000XL***	$71.25
263	Each	550-88-78	LED 12” Green Insert As Brand Name: Dialight Product #: ***132-3000XL***	$62.50
264	Each	550-88-78	Signal, Red 12” LED (Door/Visor) As Brand Name: Dialight Product #: ***101-4860XL***	$85.00
265	Each	550-88-78	Signal, ***Yellow*** 12” LED (Door/Visor) As Brand Name: Dialight Product #: ***101-4861XL***	$108.75
266	Each	550-88-78	Signal, Green 12” LED (Door/Visor) As Brand Name: Dialight Product #: ***101-4862XL***	$100.00

267	Each	550-88-78	***LED 12" Red Arrow*** As Brand Name: Dialight Product #: ***132-1002XL***	$47.50
268	Each	550-88-78	***LED 12" Yellow Arrow*** As Brand name: Dialight Product #: ***132-2002XL***	$58.75
269	Each	550-88-78	***LED 12" Green Arrow Insert*** As Brand Name: Dialight Product #: ***132-3002XL***	$62.50
270	Each	550-88-78	Filled LED 12" Pedestrian Hand/Man Insert As Brand Name: Dialight Product #: ***132-6007XL***	$112.50
271	Each	550-88-78	Pedestrian signal, 16" LED Countdown, ***Filled, polycarbonate*** As Brand Name: Dialight Product #: ***101-6815XL***	$291.90
272	Each	550-88-78	Bracket, 16", 2-way straight arm, black, (Requires 2 each per signal), aluminum As Brand Name: Pelco Product #: ***103-7640***	$115.90
273	***Each***	***550-88-78***	***LED Signal in housing. Signal Poly 12", Red Arrow, Yellow Arrow, Yellow Arrow, Green Arrow.*** ***As Brand Name: Dialight*** ***Product #: 101-4805XL***	$375.00
274	***Each***	***550-81-30***	***GPS Sensor Housed in outdoor enclosure with interface panel, 12 channel receiver, RS-232 Output to interface with Siemens/Eagle Traffic Signal Controllers.*** ***As Brand Name: Garmin*** ***Product #: 92-1000***	$288.60
275	***Each***	***550-81-30***	***UPS and Power conditioner, power interface module, electronics module and battery system.*** ***As Brand Name: Clary*** ***Product #: 191-SP1000SN***	$6,590.00
276	***Each***	***550-81-30***	***PIM – Power Interface Module.*** ***As Brand Name: Clary*** ***Product #: PIM 30C***	$419.00
277	***Each***	***550-81-30***	***Power Interface Module with Generator Plug and GFI Receptacle.*** ***As Brand Name: Clary*** ***Product #: PIM 30-GR***	$696.00
278	***Each***	***550-81-30***	***Electronics Module for UPS and Power Conditioner.*** ***As Brand Name: Clary*** ***Product #: SP1000SN***	$3,600.00
279	***Each***	***550-81-30***	***UPS Batteries Set of Six (6)*** ***As Brand Name: Clary*** ***Product #: OP72C-41***	$1,210.00

280	***Each***	***550-81-30***	***UPS Battery Cable, 6 Batteries.*** ***As Brand Name: Clary*** ***Product #: SP14E103***	$120.00
281	***Each***	***550-88-17***	***UPS Cabinet with Fan, 2 Shelves.*** ***As Brand Name: Siemens*** ***Product #: 101-2403***	$1,244.65
282	***Each***	***550-81-30***	***School Zone Solar Powered Single Flashing Beacon. Assembly with time base control and radio activated. Pedestal or side of pole mount.*** ***As Brand Name: Carmanah*** ***Product #: R829CR***	$3,908.00
283	***Each***	***550-81-30***	***School Zone Solar Powered Dual Flashing Beacon. Assembly with time base control and radio activated. Pedestal or side of pole mount.*** ***As Brand Name: Carmanah*** ***Product #: R829R***	$5,077.00
284	***Each***	***550-81-51***	***Monitor, Traffic controller, signal sequence, 12 channel, smart monitor, NEMA TS2, Conflict/voltage, LCD Display.*** ***As Brand Name: EDI*** ***Product #: MMU16LE-SM***	$753.00
285	***Each***	***550-85-47***	***Shaft, Traffic Signal Pedestal, Pedestrian Support, 10 foot extruded aluminum pole (shaft).*** ***As Brand Name: Pelco*** ***Product #: PBS100-10***	$161.60
286	***Each***	***550-85-69***	***Reinforcing collar, aluminum octagonal base and shaft reinforcing collar.*** ***As Brand Name: Pelco*** ***Product #: P B-5326-ALO***	$66.50
287	***Each***	***550-81-34***	***Flasher panel for NEMA flasher.*** ***As Brand Name: Temple*** ***Product #: EP160***	$203.00
288	***Each***	***550-88-14***	***Pole Foot, Cast Iron, Wood Pole Mount, Yellow or Black.*** ***As Brand name: Pelco*** ***Product #: SE-4080***	$33.00
289	***Each***	***550-81-30***	***Audible Pedestrian Pushbutton. Central unit, 2 wire, for audible pedestrian pushbutton to support (12) pushbuttons.*** ***As Brand Name: Polara*** ***Product #: CCU-2 Wire***	$2,540.00
290	***Each***	***550-81-30***	***Audible Pedestrian Pushbutton. Integrated Arrow, Voice Message, Tactile Feedback, Braille, with sign.*** ***As Brand Name: Polara*** ***Product #: N29BNO***	$550.00
291	***Each***	***550-81-30***	***Audible Pedestrian Pushbutton and CCU wireless Programming Device.*** ***As Brand name: Polara*** ***Product #: Config.***	$339.00

292	***Each***	***550-81-30***	***School Zone, Yellow 12" Beacon, D.C.*** ***As Brand Name: Carmanah*** ***Product #: 47553***	$225.00
293	***Each***	***550-81-30***	***School Zone, 1 Watt Solar Engine, Single Beacon.*** ***As Brand Name: Carmanah*** ***Product #: 48812***	$2,155.00
294	***Each***	***550-81-30***	***School Zone, 20 Watt Solar Engine, Dual Beacon.*** ***As Brand Name: Carmanah*** ***Product #: 53164***	$2,400.00
295	***Each***	***550-81-30***	***School Zone, EMS-2 Controller Assembly, 6 amp without radio.*** ***As Brand Name: Carmanah*** ***Product #: 46319***	$600.00
296	***Each***	***550-81-30***	***School Zone, Battery, 12 volt, 17.2 amp.*** ***As Brand Name: Carmanah*** ***Product #: 37912***	$107.75
297	***Each***	***550-91-55***	***Wireless Inpavement Vehicle Sensor Node.*** ***As Brand Name: Sensys*** ***Product #: VSN240-F***	$548.00
298	***Each***	***550-91-55***	***Wireless Vehicle Sensor Access Point Device with RS-485 option.*** ***As Brand Name: Sensys*** ***Product #: AP240-S***	$2,985.00
299	***Each***	***550-91-55***	***Wireless Vehicle Sensor Repeater Device.*** ***As Brand Name: Sensys*** ***Product #: RP240-B***	$722.00
300	***Each***	***550-91-55***	***Wireless Vehicle Sensor Master Interface Board (TS-1) with 4 detector inputs.*** ***As Brand Name: Sensys*** ***Product #: CC-170***	$568.00
301	***Each***	***550-91-55***	***Wireless Vehicle Sensor Master Interface Board (TS-2) with 4 detector inputs.*** ***As Brand Name: Sensys*** ***Product #: CC-TS2***	$751.00
302	***Each***	***550-91-55***	***Wireless Vehicle Sensor Extension Board for additional 4 detector inputs for TS-1 controller.*** ***As Brand Name: Sensys*** ***Product #: EX-TS1***	$341.50
303	***Each***	***550-91-55***	***Wireless Vehicle Sensor Extension Board for additional 4 detector inputs for TS-2 controller.*** ***As Brand Name: Sensys*** ***Product #: EX-TS2***	$421.75

304	***Each***	***550-91-55***	***Wireless Vehicle Sensor Access Device with RS-485 and cellular modem option.*** ***As Brand Name: Sensys*** ***Product #: AP240-ESG***	$4,780.00
305	***Each***	***550-91-55***	***Wireless vehicle sensor access device power supply.*** ***As Brand Name: Sensys*** ***Product #: AP240-E1EG1EGG***	$174.00
306	***Each***	***550-91-55***	***Wireless vehicle sensor repeater replacement battery pack (3-cells).*** ***As Brand Name: Sensys*** ***Product #: RP230-B Battery pack***	$86.15
307	***Each***	***550-91-55***	***Wireless vehicle sensor access box for programming access point device.*** ***As Brand Name: Sensys*** ***Product #: Access Box***	$141.50
308	***Each***	***550-91-55***	***Wireless vehicle sensor mounting bracket for access point device.*** ***As Brand name: Sensys*** ***Product #: AP240-ES Mounting bracket***	$174.00
309	***Each***	***550-91-55***	***Wireless vehicle sensor mounting bracket for repeater device.*** ***As Brand Name: Sensys*** ***Product #: RP240-B Mounting Bracket***	$174.00
310	***Each***	***550-91-55***	***Wireless vehicle sensor epoxy for sensor node.*** ***As Brand Name: Sensys*** ***Product #: VSN240-F Epoxy Table***	$40.00
311	***Each***	***550-88-56***	***Traffic signal mast arm, steel, clamp on, 40' length with end caps, clamp plate, and clamp bolts. Per 2001 AASHTO Cat. III Standards.*** ***As Brand Name: Union Metal*** ***Product #: 50303-B169-Y7***	$4,725.00
312	***Each***	***550-88-56***	***Traffic signal mast arm, steel, clamp on, 50' length with end caps, clamp plate, and clamp bolts. Per 2001 AASHTO Cat. III Standards.*** ***As Brand Name: Union Metal*** ***Product #: 50303-B169-Y9***	$5,840.00
313	***Each***	***550-88-56***	***Traffic signal mast arm, steel, clamp on, 30' length with end caps, clamp plate, and clamp bolts. Per 2001 AASHTO Cat. III Standards.*** ***As Brand Name: Union Metal*** ***Product #: 50303-B169-Y5***	$3,700.00
314	***Each***	***550-88-56***	***Traffic signal mast arm, steel, clamp on, 45' length with end caps, clamp plate, and clamp bolts. Per 2001 AASHTO Cat. III Standards.*** ***As Brand Name: Union Metal*** ***Product #: 50303-B169-Y8***	$5,550.00

315	***Each***	***550-88-56***	***Traffic signal mast arm standard, steel, 21' with top cap, hand holes and covers. Per 2001 AASHTO Cat. III Standards.*** ***As Brand Name: Union Metal*** ***Product #: 50303-B169-Y1***	$4,162.00
316	***Each***	***550-88-56***	***Traffic signal mast arm standard, steel, 30' with top cap, hand holes and covers. Per 2001 AASHTO Cat. III Standards.*** ***As Brand Name: Union Metal*** ***Product #: 50303-B169-Y2***	$4,440.00
317	***Each***	***550-88-56***	***Traffic signal mast arm, steel, clamp on, 40' length with end caps, clamp plate and clamp bolts. Per 2001 AASHTO Cat. II Standards.*** ***As Brand Name: Union Metal*** ***Product #: 50303-B168-Y12***	$5,787.00
318	***Each***	***550-88-56***	***Traffic signal mast arm, steel, clamp on, 50' length with end caps, clamp plate and clamp bolts. Per 2001 AASHTO Cat. II Standards.*** ***As Brand Name: Union Metal*** ***Product #: 50303-B168-Y14***	$8,475.00
319	***Each***	***550-88-56***	***Traffic signal mast arm, steel, clamp on, 30' length with end caps, clamp plate and clamp bolts. Per 2001 AASHTO Cat. II Standards.*** ***As Brand Name: Union Metal*** ***Product #: 50303-B168-Y10***	$4,455.00
320	***Each***	***550-88-56***	***Traffic signal mast arm, steel, clamp on, 45' length with end caps, clamp plate and clamp bolts. Per 2001 AASHTO Cat. II Standards.*** ***As Brand Name: Union Metal*** ***Product #: 50303-B168-Y13***	$7,880.00
321	***Each***	***550-88-56***	***Traffic signal mast arm standard, steel, 22' with top cap, hand holes and covers. Per 2001 AASHTO Cat. II Standards.*** ***As Brand Name: Union Metal*** ***Product #: 50303-B168-Y3*** ***Brand Name: NSS*** ***Product#: 1W12X27REF***	$4,820.00
322	***Each***	***550-88-56***	***Traffic Signal mast arm standard, steel 30' with top cap, hand holes and covers. Per2001 AASHTO Cat. II standards*** ***As Brand Name: Union Metal*** ***Product #: 50303-B16-Y7***	$6300.00