AUTHORITY: Act 431 of 1984
COMPLETION: Required
PENALTY: No further payment will be made to the previous Contractor Name and or number.

STATE OF MICHIGAN
DEPARTMENT OF TECHNOLOGY, MANAGEMENT AND BUDGET
PROCUREMENT
P.O. BOX 30026, LANSING, MI 48909
OR
530 W. ALLEGAN, LANSING, MI 48933

CHANGE OF CONTRACTOR NAME AND OR TAX IDENTIFICATION NUMBER

CONTRACT NO. 071B2200133
Hereafter referred as
CONTRACT NO. 071B2200217
Between
THE STATE OF MICHIGAN

And

CURRENT NAME & ADDRESS OF CONTRACTOR:	PRIMARY CONTACT	EMAIL
Cadillac Culvert, Inc.	**Don Aldrich**	**dealdrich@hotmail.com**
5305 M-115	TELEPHONE	NEW CONTRACTOR #, MAIL CODE
Cadillac, MI 49601	**(231) 633-8203**	

PREVIOUS NAME & ADDRESS OF CONTRACTOR:	PRIMARY CONTACT	EMAIL
Premarc – Cadillac Concrete Pipe and Culvert	**Don Aldrich**	**dona@premarc.com**
5305 Highway M-115	TELEPHONE	PREVIOUS CONTRACTOR #, MAIL CODE
Cadillac, MI 49601	**(231) 633-8203**	

DESCRIPTION OF CHANGE NOTICE:	
THE PARTIES ARE IN AGREEMENT THAT CADILLAC CULVERT, INC. WILL ASSUME ALL DUTIES AND OBLIGATIONS, AND RIGHTS UNDER CONTRACT NO. 071B2200132 AND THAT PREMARC – CADILLAC CONCRETE PIPE AND CULVERT WILL NO LONGER BE THE RESPONSIBLE PARTY. THIS ACTION WILL CONSTITUTE A VALID NOVATION FOR THE SUBSTITUTION OF THE PARTIES. DUE TO THE INTERNAL SYSTEMS RELATED TO THE RELEASE OF CONTRACTOR PAYMENTS, A NEW CONTRACT NUMBER MUST BE ASSIGNED. THE NEW CONTRACT NUMBER IS 071B2200217. EXCEPT FOR THE NEWLY-ASSIGNED NUMBER, THE CONTRACT TERMS AND CONDITIONS REMAIN IN EFFECT AND ENFORCEABLE AGAINST CADILLAC CULVERT, INC.	
AMOUNT REMAINING ON CONTRACT #071B2200133 TO BE TRANSFERRED TO CONTRACT #071B2200217	$471,400.00

PREVIOUS CONTRACTOR:	**FOR THE STATE:**
Premarc – Cadillac Concrete Pipe and Culvert	
Firm Name	Signature
	Jeff Brownlee, Chief Procurement Officer
Authorized Agent Signature	Name/Title
Authorized Agent (Print or Type)	DTMB/Procurement
Date	Date

CURRENT CONTRACTOR:

Cadillac Culvert, Inc.

Firm Name

Authorized Agent Signature

Authorized Agent (Print or Type)

Date

Form No. DMB 234 (Rev. 1/96)
AUTHORITY: Act 431 of 1984
COMPLETION: Required
PENALTY: Contract will not be executed unless form is filed

STATE OF MICHIGAN
DEPARTMENT OF TECHNOLOGY, MANAGEMENT AND BUDGET **March 26, 2012**
PROCUREMENT
P.O. BOX 30026, LANSING, MI 48909
OR
530 W. ALLEGAN, LANSING, MI 48933

NOTICE
OF
CONTRACT NO. 071B2200133
between
THE STATE OF MICHIGAN
And

FAX: (231) 775-2997

NAME & ADDRESS OF CONTRACTOR **Premarc – Cadillac Concrete Pipe and Culvert** **5305 Highway M-115** **Cadillac, MI 49601** **Email: dona@premarc.com**	TELEPHONE (231) 633-8203 **Don Aldrich** CONTRACTOR NUMBER/MAIL CODE BUYER/CA (517) 373-9776 **Paula Hurst**
Contract Compliance Inspector: Ruth Thole **Concrete Planks for Boat Launch Ramps - DNR**	
CONTRACT PERIOD: **3 yrs. + 2 one-year options** From: **April 1, 2012** To: **March 31, 2015**	
TERMS **1% 10 days**	SHIPMENT **N/A**
F.O.B. **Destination**	SHIPPED FROM **N/A**
ALTERNATE PAYMENT OPTIONS: ☐ P-card ☐ Direct Voucher (DV) ☐ Other	
MINIMUM DELIVERY REQUIREMENTS **Five (5) Planks**	
MISCELLANEOUS INFORMATION:	

The terms and conditions of this Contract are attached.

Estimated Contract Value: $471,400.00

Form No. DMB 234 (Rev. 1/96)
AUTHORITY: Act 431 of 1984
COMPLETION: Required
PENALTY: Contract will not be executed unless form is filed

STATE OF MICHIGAN
DEPARTMENT OF TECHNOLOGY, MANAGEMENT AND BUDGET
PROCUREMENT
P.O. BOX 30026, LANSING, MI 48909
OR
530 W. ALLEGAN, LANSING, MI 48933

CONTRACT NO. 071B2200133
between
THE STATE OF MICHIGAN
And

FAX: (231) 775-2997

NAME & ADDRESS OF CONTRACTOR **Premarc – Cadillac Concrete Pipe and Culvert** **5305 Highway M-115** **Cadillac, MI 49601** **Email: dona@premarc.com**	TELEPHONE (231) 633-8203 **Don Aldrich** CONTRACTOR NUMBER/MAIL CODE BUYER/CA (517) 373-9776 **Paula Hurst**
Contract Compliance Inspector: Ruth Thole **Concrete Planks for Boat Launch Ramps - DNR**	
CONTRACT PERIOD: **3 yrs. + 2 one-year options** From: **April 1, 2012** To: **March 31, 2015**	
TERMS **1% 10 days**	SHIPMENT **N/A**
F.O.B. **Destination**	SHIPPED FROM **N/A**
ALTERNATE PAYMENT OPTIONS: ☐ P-card ☐ Direct Voucher (DV) ☐ Other	
MINIMUM DELIVERY REQUIREMENTS **Five (5) Planks**	
MISCELLANEOUS INFORMATION: **The terms and conditions of this Contract are those of ITB #071I2200070, this Contract Agreement and the vendor's quote dated February 8, 2012. In the event of any conflicts between the specifications, and terms and conditions, indicated by the State and those indicated by the vendor, those of the State take precedence.** **Estimated Contract Value: $471,400.00**	

THIS IS NOT AN ORDER: This Contract Agreement is awarded on the basis of our inquiry bearing the ITB No. 071I2200070. Orders for delivery will be issued directly by the Department of Natural Resources through the issuance of a Purchase Order Form.

All terms and conditions of the invitation to bid are made a part hereof.

FOR THE CONTRACTOR:	**FOR THE STATE:**
Premarc – Cadillac Concrete Pipe and Culvert Firm Name	Signature Jeff Brownlee, Chief Procurement Officer
Authorized Agent Signature	Name/Title DTMB-Procurement
Authorized Agent (Print or Type)	Division
Date	Date

Table of Contents

Definitions **9**

1.1 Project Identification **10**
1.1.1 Project Request 10
1.1.2 Background 10

1.2 Scope of Work and Deliverable(s) **10**
1.2.1 In Scope – - Deleted, Not Applicable 10
1.2.2 Deliverable(s) 10
1.2.3 Quantity 11
1.2.4 Ordering 11
1.2.5 Alternate Bids – Deleted, Not Applicable 11

1.3 Management and Staffing **11**
1.3.1 Project Management 11
1.3.2 Reports 11
1.3.3 Staff, Duties, and Responsibilities 11
1.3.4 Meetings 11
1.3.5 Place of Performance 11
1.3.6 Reserved 11
1.3.7 Binding Commitments – Deleted, Not Applicable 12
1.3.8 Training – Deleted, Not Applicable 12
1.3.9 Security – Deleted, Not Applicable 12

1.4 Delivery and Acceptance **12**
1.4.1 Time Frames 12
1.4.2 Minimum Order 12
1.4.3 Packaging 12
1.4.4 Palletizing – Deleted, Not Applicable 12
1.4.5 Delivery Term 12
1.4.6 Acceptance Process 12
1.4.7 Criteria 12

1.5 Proposal Pricing **12**
1.5.1 Pricing 12
1.5.2 Quick Payment Terms 13
1.5.3 Price Term 13
1.5.4 Tax Excluded from Price 13
1.5.5 Invoices 13

1.6 Commodity Requirements **13**
1.6.1 Customer Service 13
1.6.2 Research and Development – Deleted, Not Applicable 13
1.6.3 Quality Assurance Program (Best Value Evaluation) 13
1.6.4 Warranty for Deliverable(s) (Best Value Evaluation) 13
1.6.5 Special Incentives (Best Value Evaluation) 14
1.6.6 Energy Efficiency – Deleted, Not Applicable 14
1.6.7 Environmental Requirements – Deleted, Not Applicable 14
1.6.8 Recycled Content and Recyclability – Deleted, Not Applicable 14
1.6.9 Materials Identification and Tracking 14

1.7 Extended Purchasing – Deleted, Not Applicable **14**

Article 2 – Terms and Conditions ***15***

2.1 Contract Term **15**

2.1.1 Contract Term 15
2.1.2 Options to Renew 15

2.2 Payments and Taxes 15
2.2.1 Fixed Prices for Deliverable(s) 15
2.2.2 Payment Deadlines 15
2.2.3 Invoicing and Payment – In General - Deleted, Not Applicable 15
2.2.4 Pro-ration - Deleted, Not Applicable 15
2.2.5 Final Payment and Waivers 15
2.2.6 Electronic Payment Requirement 15
2.2.7 Employment Taxes 15
2.2.8 Sales and Use Taxes 15

2.3 Contract Administration 15
2.3.1 Issuing Office 16
2.3.2 Contract Compliance Inspector 16
2.3.3 Project Manager 16
2.3.4 Contract Changes 16
2.3.5 Price Changes 17
2.3.6 Notices 17
2.3.7 Covenant of Good Faith 17
2.3.8 Assignments 17
2.3.9 Equipment 17
2.3.10 Facilities - Deleted, Not Applicable 18

2.4 Contract Management 18
2.4.1 Contractor Personnel Qualifications 18
2.4.2 Contractor Key Personnel – Deleted, Not Applicable 18
2.4.3 Removal or Reassignment of Personnel at the State's Request – Deleted, Not Applicable 18
2.4.4 Contractor Personnel Location – Deleted, Not Applicable 18
2.4.5 Contractor Identification 18
2.4.6 Cooperation with Third Parties 18
2.4.7 Relationship of the Parties 18
2.4.8 Contractor Return of State Equipment/Resources – Deleted, Not Applicable18
2.4.9 Background Checks – Deleted, Not Applicable 18
2.4.10 Compliance With State Policies – Deleted, Not Applicable 18

2.5 Subcontracting by Contractor 18
2.5.1 Contractor Responsible 18
2.5.2 State Approval of Subcontractor 18
2.5.3 Subcontract Requirements 19
2.5.4 Competitive Selection 19

2.6 Reserved 19

2.7 Performance 19
2.7.1 Time of Performance 19
2.7.2 Service Level Agreements - Deleted, Not Applicable 19
2.7.3 Liquidated Damages – Deleted, Not Applicable 19
2.7.4 Excusable Failure 19

2.8 Acceptance of Deliverable(s) 20
2.8.1 Quality Assurance 20
2.8.2 Delivery Responsibilities 20
2.8.3 Process for Acceptance of Deliverable(s) 20
2.8.4 Acceptance of Deliverable(s) 20
2.8.5 Process for Approval of Written Deliverable(s) - Deleted, Not Applicable .. 21

2.8.6 Process for Approval of Services - Deleted, Not Applicable 21
2.8.7 Final Acceptance – Deleted, Not Applicable 21

2.9 Ownership - Deleted, Not Applicable 21

2.10 State Standards - Deleted, Not Applicable 21

2.11 Confidentiality 21
2.11.1 Confidential Information 21
2.11.2 Protection and Destruction of Confidential Information 21
2.11.3 Exclusions 21
2.11.4 No Obligation to Disclose 21
2.11.5 Security Breach Notification 22

2.12 Records and Inspections 22
2.12.1 Inspection of Work Performed 22
2.12.2 Retention of Records 22
2.12.3 Examination of Records 22
2.12.4 Audit Resolution 22
2.12.5 Errors 22

2.13 Warranties 22
2.13.1 Warranties and Representations 23
2.13.2 Warranty of Merchantability 23
2.13.3 Warranty of Fitness for a Particular Purpose 23
2.13.4 Warranty of Title 24
2.13.5 Equipment Warranty – Deleted, Not Applicable 24
2.13.6 New Deliverable(s) 24
2.13.7 Prohibited Products 24
2.13.8 Consequences For Breach 24

2.14 Insurance 24
2.14.1 Liability Insurance 24
2.14.2 Subcontractor Insurance Coverage 26
2.14.3 Certificates of Insurance and Other Requirements 26

2.15 Indemnification 26
2.15.1 General Indemnification 26
2.15.2 Code Indemnification - Deleted, Not Applicable 27
2.15.3 Employee Indemnification 27
2.15.4 Patent/Copyright Infringement Indemnification 27
2.15.5 Continuing Obligation 27
2.15.6 Indemnification Procedures 27
2.15.7 Limitation of Liability 28

2.16 Termination by the State 28
2.16.1 Notice and Right to Cure 28
2.16.2 Termination for Cause 28
2.16.3 Termination for Convenience 29
2.16.4 Termination for Non-Appropriation 29
2.16.5 Termination for Criminal Conviction 29
2.16.6 Termination for Approvals Rescinded 29
2.16.7 Rights and Obligations upon Termination 29
2.16.8 Reservation of Rights 30
2.16.9 Contractor Transition Responsibilities – Deleted, Not Applicable 30
2.16.10 Transition Payments – Deleted, Not Applicable 30

2.17 Termination by the Contractor 30
2.17.1 Termination 30

2.18 Stop Work 30
2.18.1 Stop Work Order – Deleted, Not Applicable 30
2.18.2 Termination of Stop Work Order – Deleted, Not Applicable 30
2.18.3 Allowance of the Contractor's Costs – Deleted, Not Applicable 30

2.19 Reserved 30

2.20 Dispute Resolution 30
2.20.1 General 31
2.20.2 Informal Dispute Resolution 31
2.20.3 Injunctive Relief 31
2.20.4 Continued Performance 31

2.21 Disclosure Responsibilities 31
2.21.1 Disclosure of Litigation 31
2.21.2 Other Disclosures 32
2.21.3 Call Center Disclosure – Deleted, Not Applicable 32

2.22 Extended Purchasing – Deleted, Not Applicable 32

2.23 Laws 32
2.23.1 Governing Law 32
2.23.2 Compliance with Laws 32
2.23.3 Jurisdiction 32
2.23.4 Nondiscrimination 32
2.23.5 Unfair Labor Practices 33
2.23.6 Environmental Provision 33
2.23.7 Freedom of Information 33
2.23.8 Workplace Safety and Discriminatory Harassment - Deleted, Not Applicable33
2.23.9 Prevailing Wage - Deleted, Not Applicable 33
2.23.10 Abusive Labor Practices 33

2.24 General Provisions 33
2.24.1 Bankruptcy and Insolvency 33
2.24.2 Media Releases 34
2.24.3 Contract Distribution 34
2.24.4 Permits 34
2.24.5 Website Incorporation 34
2.24.6 Future Bidding Preclusion - Deleted, Not Applicable 34
2.24.7 Antitrust Assignment 34
2.24.8 Disaster Recovery 34
2.24.9 Legal Effect 34
2.24.10 Entire Agreement 34
2.24.11 Order of Precedence 34
2.24.12 Headings 35
2.24.13 Form, Function and Utility – Deleted, Not Applicable 35
2.24.14 Reformation and Severability 35
2.24.15 Approval 35
2.24.16 No Waiver of Default 35
2.24.17 Survival 35
2.24.18 PCI Data Security Standard 35

Attachment A, Drawing 36

Attachment B, Pricing 37

Definitions

This section provides definitions for terms used throughout this document.

Business Day - whether capitalized or not, means any day other than a Saturday, Sunday, State employee temporary layoff day, or State-recognized legal holiday (as identified in the Collective Bargaining Agreement for State employees) from 8:00am through 5:00pm Eastern Time unless otherwise stated.

Buyer – the DTMB-Procurement employee identified on the cover page of this Contract.

Chronic Failure - as defined in applicable Service Level Agreements.

Contract – based on this ITB, an agreement that has been approved and executed by the awarded bidder, the DTMB-Procurement Director, and the State Administrative Board.

Contractor – the awarded bidder after the Effective Date.

Days - Business Days unless otherwise specified.

Deleted, Not Applicable - the section is not applicable or included in this CONTRACT. This is used as a placeholder to maintain consistent numbering.

Deliverable(s) - physical goods or commodities as required or identified in a Statement of Work.

Eastern Time – either Eastern Standard Time or Eastern Daylight Time, whichever is prevailing in Lansing, Michigan.

Effective Date - the date that a binding contract is executed by the final party.

Final Acceptance - has the meaning provided in Section 2.8.7, Final Acceptance, unless otherwise stated in Article 1.

Key Personnel - any personnel designated as Key Personnel in Sections 1.3.3, Staff, Duties, and Responsibilities, and 2.4.2, Contractor Key Personnel, subject to the restrictions of Section 2.4.2.

Post-Industrial Waste - industrial by-products which would otherwise go to disposal and wastes generated after completion of a manufacturing process, but does not include internally generated scrap commonly returned to industrial or manufacturing processes.

Purchase Order - a written document issued by the State that requests full or partial performance of the Contract.

State - the State of Michigan.

State Location - any physical location where the State performs work. State Location may include state-owned, leased, or rented space.

Stop Work Order - a notice requiring the Contractor to fully or partially stop work in accordance with the terms of the notice.

Subcontractor - a company or person that the Contractor delegates performance of a portion of the Deliverable(s) to, but does not include independent contractors engaged by the Contractor solely in a staff augmentation role.

Unauthorized Removal - the Contractor's removal of Key Personnel without the prior written consent of the State.

ARTICLE ONE

1.1 Project Identification

1.1.1 Project Request

This Contract is for pre-cast Concrete Planks for the Department of Natural Resources (DNR).

1.1.2 Background

DNR maintains and administers numerous state parks and recreation areas throughout the State of Michigan. As part of the recreation experience, the public is provided access to lakes through DNR created boat launch areas. Concrete planks are used at the boat launch sites to provide a stable area along a lake's shoreline where vehicles and boat trailers may enter the water for loading and unloading.

1.2 Scope of Work and Deliverable(s)

1.2.1 In Scope – - Deleted, Not Applicable

1.2.2 Deliverable(s)

Concrete planks shall be constructed as shown on **Attachment A – Drawing** titled, "Typical Plank for both the Upper and Lower Peninsula", dated January 1, 2003, and as specified herein.

The method of forming the planks shall be at the option of the Contractor but shall generally conform to Michigan Department of Transportation (MDOT) 2003 Standard Specifications for Construction (herein referred to as "MDOT Standard Specifications"), Subsections 706.03 for Type B surfaces. Forms shall be of such thickness that planks will remain true to the shape and dimensions shown on **Attachment A – Drawing**.

Steel reinforcing bars shall be #5 re-rod and shall meet MDOT Standard Specifications, Section 905 requirements and shall be handled and placed in accordance with MDOT Standard Specifications, Subsection 706.03 and as shown on **Attachment A – Drawing.**

Concrete used for the planks shall be in conformance with MDOT Standard Specifications, Section 701 except that materials shall be Type III Portland Cement, 2NS fine aggregate, 6A course aggregate and water. The proportion of cement, fine aggregate and course aggregate, by dry, loose volume, shall be approximately 1:1.75:3. Cement content shall be at least 6.5 sacks per cubic yard of concrete, with a compressive strength for the concrete mix of not less than 4000 psi at 28 days. Slump shall be 3.5 inches as measured by ASTM specification C-143 – standard Method of Test for Slump of Portland Cement Concrete. Use air-entraining admixture, but no other admixtures are to be used. Air-entrainment shall conform to the MDOT 2003 Standard Specifications for Construction, Section 903.03 and shall be measured at 6.5 +/- 1.5 percent, by volume, as measured by ASTM specification C-173 – Air content, as determined by the Volumetric Method.

The wearing surface of the planks shall be 1/8" wide grooves as noted on **Attachment A – Drawing,** formed in accordance with MDOT Standard Specifications, Subsection 602.03.

Planks shall be straight with no bow over their total length and width as measured along either the top or bottom line of the plank and they shall be square. The diagonal dimensions of each finished plank shall measure within 1/4" of one another.

For each concrete batch mixture or each 50 cubic yards, whichever is less, collect four test cylinders according to ASTM C-31. One specimen to be tested at 7 days, two specimens tested at 28 days and one specimen for later testing if required. Testing shall be according to ASTM C-39 – Method of Test for Compressive Strength of Molded Concrete Cylinders. Test results to be provided to the DNR in writing on the same day tests are made. In addition, one test cylinder from each concrete batch mixture or each 50 cubic yards, whichever is lesser, shall be taken, with the batch number and the date taken marked on the test cylinder. Test cylinders shall conform to ASTM C-31 and shall be available to the DNR at the end of 21 days from the pour, for performing 28-day strength tests. The batch number shall be indicated directly on each plank.

Planks, in quantities stated, shall be delivered, FOB Destination, to the location(s) designated by the DNR by the date(s) specified by the DNR. Quantities, delivery location, and due date will be conveyed to the Contractor through the issuance of purchase order(s). Unloading of planks by the Contractor may be required.

Spacers used for stacking planks at the designated delivery location(s) shall be high density extruded polystyrene with a minimum unit weight of two pounds per cubic foot. Spacers shall be a minimum of 1" thick, 6" wide, and a length to extend the width of the planks. Spacers for 18 foot planks shall be placed one foot from the plank ends and four feet on center, for a total of five spacers.

Planks shall be stored for a minimum of 30 days before delivery. Any delivered planks that are broken, have excessive cracking, or are not constructed to the plan shape and dimensions, or do not conform to the above specifications, will not be accepted. Replacement of such planks will be the responsibility of the Contractor. Removal of such planks from the site may be requested by the DNR and shall be done so at no additional cost.

1.2.3 Quantity

The State is not obligated to purchase in any specific quantity.

1.2.4 Ordering

The State will issue a Purchase Order to order any Deliverable(s). The Contractor is not authorized to begin performance until receipt of a Purchase Order.

1.2.5 Alternate Bids – Deleted, Not Applicable

1.3 Management and Staffing

1.3.1 Project Management

The Contractor will carry out this project under the direction and control of the Department of Natural Resources.

1.3.2 Reports

The Contractor shall be able to provide various reports if and when requested by DNR. Examples include itemized reports of total items purchased by each DNR location, open invoice reports, quantity reports, etc. Reports should be submitted electronically to DNR at the below email address:

Jordan Byelich
Email: byelichj@michigan.gov

1.3.3 Staff, Duties, and Responsibilities

The Contractor must provide the CCI with the names of the Key Personnel such as Customer Service, Accounts Receivable, Outside Sales, etc. It is the preference of the State of Michigan that the Contractor provides a statewide toll-free number for customer service calls.

The Contractor will be required to assume responsibility for all contractual activities, whether or not that Contractor performs them. Further, the State will consider the Contractor to be the sole point of contact with regards to contractual matters, including payment of any and all charges resulting from this Contract.

1.3.4 Meetings

The State may request meetings as it deems appropriate.

1.3.5 Place of Performance

The Contractor must list the location of all facilities that will be involved in performing this Contract:

Full address of place of performance	Owner/operator of facility to be used	Percent (%) of Contract value to be performed at listed location
5305 M-115 Cadillac, MI 49601	Premarc	100

1.3.6 Reserved

1.3.7 Binding Commitments – Deleted, Not Applicable

1.3.8 Training – Deleted, Not Applicable

1.3.9 Security – Deleted, Not Applicable

1.4 Delivery and Acceptance

1.4.1 Time Frames

All Deliverable(s) must be delivered within 45 Days after receipt of order. The receipt of order date is governed in the same manner as notices sent under Section 2.3.6, Notices.

Deliveries will be accepted between the hours of 8:00 a.m. and 4:00 p.m. Monday through Friday, excluding legal State holidays. Contractor must provide 48 hours' notice prior to delivery to insure DNR staff is available to receive goods.

1.4.2 Minimum Order

The State's requested minimum order is five (5) planks. Planks delivered to the Upper Peninsula will have an additional freight charge (**see Attachment B, Pricing**).

There will be no additional charges (i.e., handling fees) on orders less than the State's requested minimum order or less than the Contractor's minimum order requirement.

1.4.3 Packaging

Deliverables must be packaged and shipped consistent with good commercial practices.

1.4.4 Palletizing – Deleted, Not Applicable

1.4.5 Delivery Term

Unless specified otherwise below, delivery is governed by Section 2.8.2, Delivery Responsibilities.

The Contractor must quote prices "F.O.B. Destination" with transportation charges prepaid on all orders that meet the minimum order requirement specified in Section 1.4.2, Minimum Order. Destination may be any location within the state of Michigan. Ship to location will be conveyed to the Contractor through the issuance of a purchase order.

1.4.6 Acceptance Process

The acceptance process is defined in Section 2.8.4, Acceptance of Deliverable(s), unless otherwise defined in this section.

1.4.7 Criteria

The State will use the following criteria to determine acceptance of Deliverable(s):

(α) Each order placed shall be delivered in the quantities ordered and within the timeframe outlined in this Contract.

(β) The DNR representative, or their designee, will approve acceptance of goods upon delivery. Any delivered planks that are broken, have excessive cracking, or are not constructed to the plan shape and dimensions, or do not conform to specifications, will not be accepted. Replacement of such planks will be the responsibility of the Contractor. Removal of such planks from the site may be requested by the DNR and shall be done so at no additional cost.

1.5 Proposal Pricing

1.5.1 Pricing

See **Attachment B**.

1.5.2 Quick Payment Terms

The Contractor will offer a quick payment discount of 1% off an invoice if paid within 10 days from the State's receipt of the invoice or delivery of the Deliverable(s), whichever is later. The number of days must not include processing time for payment to be received by the Contractor's financial institution.

1.5.3 Price Term

Prices quoted in **Attachment B** are firm for the duration of this Contract.

1.5.4 Tax Excluded from Price

(a) Sales Tax: The State is exempt from sales tax for direct purchases. The Contractor's prices must not include sales tax. DTMB-Procurement will furnish exemption certificates for sales tax upon request.

(b) Federal Excise Tax: The State may be exempt from Federal Excise Tax, or the taxes may be reimbursable, if articles purchased under any resulting Contract are used for the State's exclusive use. Certificates showing exclusive use for the purposes of substantiating a tax-free, or tax-reimbursable sale will be sent upon request. If a sale is tax exempt or tax reimbursable under the Internal Revenue Code, the Contractor's prices must not include the Federal Excise Tax.

1.5.5 Invoices

Invoices must include, at a minimum, the following information:

(a) Date
(b) PO #
(c) Quantity
(d) Deliverable
(e) Unit Price
(f) Shipping Cost (if any)
(g) Total Price

1.6 Commodity Requirements

1.6.1 Customer Service

Contractor shall have ordering/customer service capabilities. This includes having the capacity to receive orders electronically, by phone, facsimile, and by written order. Contractors shall have internal controls to insure that authorized individuals with the State place orders. The Contractor shall verify orders that have quantities that appear to be abnormal or excessive.

It is the preference of the State of Michigan that the Contractor have an accessible customer service department with an individual specifically assigned to State of Michigan accounts. It is the preference of the State of Michigan that the Contractor has experienced sales representatives make timely personal visits to State accounts. The Contractor's customer service must respond to State agency inquiries promptly. It is the preference of the State of Michigan that the Contractor provides a statewide toll-free number for customer service calls.

1.6.2 Research and Development – Deleted, Not Applicable

1.6.3 Quality Assurance Program

All products are inspected by authorized personnel prior to shipment.

1.6.4 Warranty for Deliverable(s)

All warranty claims should be sent immediately to the attention of Don Aldrich at the address listed on the cover page of this Contract. Product will be repaired immediately. If repair is not possible, a new item will be sent at no cost to the State.

1.6.5 Special Incentives

Deliverables will be off loaded by Contractor, using Contractor vehicles. Final placement of planks will be determined and performed by State of Michigan DNR staff.

1.6.6 Energy Efficiency – Deleted, Not Applicable

1.6.7 Environmental Requirements – Deleted, Not Applicable

1.6.8 Recycled Content and Recyclability – Deleted, Not Applicable

1.6.9 Materials Identification and Tracking

The Contractor has no violations.

1.7 Extended Purchasing – Deleted, Not Applicable

Article 2 – Terms and Conditions

2.1 Contract Term

2.1.1 Contract Term

The Contract term begins approximately April 1, 2012 and expires March 31, 2015. All outstanding Purchase Orders will expire upon the termination of the Contract for any of the reasons listed in Section 2.16, Termination by the State, unless otherwise agreed to in writing by DTMB-Procurement. Absent an early termination, Purchase Orders issued, but not expired, by the end of this Contract's term will remain in effect until the next September 30.

2.1.2 Options to Renew

This Contract may be renewed for up to two additional one year periods. Renewal must be by mutual written agreement of the parties, not less than 30 days before expiration of this Contract.

2.2 Payments and Taxes

2.2.1 Fixed Prices for Deliverable(s)

Prices are fixed for all Deliverable(s).

2.2.2 Payment Deadlines

Undisputed invoices will be due and payable by the State, in accordance with the State's standard payment procedure as specified in 1984 PA 279, MCL 17.51 *et seq.*, within 45 days after receipt.

2.2.3 Invoicing and Payment – In General - Deleted, Not Applicable

2.2.4 Pro-ration - Deleted, Not Applicable

2.2.5 Final Payment and Waivers

The Contractor's acceptance of final payment by the State constitutes a waiver of all claims by the Contractor against the State for payment under this Contract, other than those claims previously filed in writing on a timely basis and still disputed. For other claims, final payment by the State will not constitute a waiver by either party of any rights as to the other party's continuing obligations, nor will it constitute a waiver of any claims under this Contract, including claims for Deliverable(s) not reasonably known to be defective or substandard.

2.2.6 Electronic Payment Requirement

As required by MCL 18.1283a, the Contractor must electronically register with the State at http://www.michigan.gov/cpexpress to receive electronic fund transfer (EFT) payments.

2.2.7 Employment Taxes

The Contractor must collect and pay all applicable federal, state, and local employment taxes.

2.2.8 Sales and Use Taxes

The Contractor must register and remit sales and use taxes on taxable sales of tangible personal property or services delivered into the State. If the Contractor lacks sufficient presence in Michigan to be required to register and pay taxes, it must do so on a voluntary basis. The requirement to register and remit sales and use taxes extends to (a) all members of a "controlled group of corporations" as defined in § 1563(a) of the Internal Revenue Code, 26 USC 1563(a), and applicable regulations; and (b) all organizations under common control that make sales at retail for delivery into the State. Any United States Department of Treasury regulation that references "two or more trades or businesses under common control" includes organizations such as sole proprietorships, partnerships (as defined in § 7701(a)(2) of the Internal Revenue Code, 26 USC 7701(a)(2)), trusts, estates, corporations, or limited liability companies.

2.3 Contract Administration

2.3.1 Issuing Office

This Contract is issued by DTMB-Procurement on behalf of Department of Natural Resources (State). **DTMB-Procurement is the only entity authorized to modify the terms and conditions of this Contract, including the prices and specifications.** The Contract Administrator within DTMB-Procurement for this Contract is:

Paula Hurst, Buyer
Procurement
Department of Technology, Management and Budget
Mason Bldg, 2nd Floor
PO Box 30026
Lansing, MI 48909
Email: hurstp2@michigan.gov
Phone: (517) 373-9776

2.3.2 Contract Compliance Inspector

The Contract Compliance Inspector, named below, will monitor and coordinate Contract activities on a day-to-day basis. However, monitoring of this Contract implies **no authority to modify the terms and conditions of this Contract, including the prices and specifications.**

Ruth Thole, Buyer
Department of Natural Resources
Mason Bldg, 6th Floor
PO Box 30028
Lansing, MI 48909
Email: tholer@michigan.gov
Phone: (517) 335-1553
FAX: (517) 373-6507

2.3.3 Project Manager

The Project Manager, named below, will oversee the project. However, management of the project implies **no authority to modify the terms and conditions of this Contract, including the prices and specifications.**

Jordan Byelich
Department of Natural Resources
530 West Allegan Street
Lansing mi 48933
Email: byelichj@michigan.gov
Phone: (517) 241-1533

2.3.4 Contract Changes

(a) If the State requests or directs the Contractor to provide any Deliverable(s) that the Contractor believes are outside the scope of the Contractor's responsibilities under this Contract, the Contractor must notify the State before performing the requested activities. If the Contractor fails to notify the State, any activities performed will be considered in-scope and not entitled to additional compensation or time. If the Contractor begins work outside the scope of this Contract and then ceases performing that work, the Contractor must, at the request of the State, retract any out-of-scope work that would adversely affect this Contract.

(b) The State or the Contractor may propose changes to this Contract. If the Contractor or the State requests a change to the Deliverable(s) or if the State requests additional Deliverable(s), the Contractor must provide a detailed outline of all work to be done, including tasks, timeframes, listing of key personnel assigned, estimated hours for each individual per Deliverable, and a complete and detailed cost justification. If the parties agree on the proposed change, DTMB-Procurement will prepare and issue a notice that describes the change, its effects on the Deliverable(s), and any affected components of this Contract (Contract Change Notice).

(c) No proposed change may be performed until DTMB-Procurement issues a duly executed Contract Change Notice for the proposed change.

2.3.5 Price Changes

Pricing is firm for the duration of this Contract.

2.3.6 Notices

All notices and other communications required or permitted under this Contract must be in writing and will be considered given when delivered personally, by fax (if provided) or by e-mail (if provided), or by registered mail, return receipt requested, addressed as follows (or any other address that is specified in writing by either party):

If to State:

State of Michigan
DTMB-Procurement
Attention: Paula Hurst
PO Box 30026
530 West Allegan
Lansing, MI 48909
Email: hurstp2@michigan.gov
FAX: (517) 335-0046

If to Contractor:
Don Aldrich
5305 Highway M-115
Cadillac, MI 49601
dona@premarc.com
FAX: (231) 775-2997

Delivery by a nationally recognized overnight express courier will be treated as personal delivery.

2.3.7 Covenant of Good Faith

Each party must act reasonably and in good faith. Unless otherwise provided in this Contract, the parties will not unreasonably delay, condition or withhold their consent, decision, or approval any time it is requested or reasonably required in order for the other party to perform its responsibilities under this Contract.

2.3.8 Assignments

(a) Neither party may assign this Contract, or assign or delegate any of its duties or obligations under this Contract, to another party (whether by operation of law or otherwise), without the prior approval of the other party. The State may, however, assign this Contract to any other State agency, department, or division without the prior approval of the Contractor.

(b) If the Contractor intends to assign this Contract or any of the Contractor's rights or duties under this Contract, the Contractor must notify the State and provide adequate information about the assignee at least 90 days before the proposed assignment or as otherwise provided by law or court order. The State may withhold approval from proposed assignments, subcontracts, or novations if the State determines, in its sole discretion, that the transfer of responsibility would decrease the State's likelihood of receiving performance on this Contract or the State's ability to recover damages.

(c) If the State permits an assignment of the Contractor's right to receive payments, the Contractor is not relieved of its responsibility to perform any of its contractual duties. All payments must continue to be made to one entity.

2.3.9 Equipment

The State will not provide equipment and resources unless specifically identified in the Statement(s) of Work or other Contract exhibits.

2.3.10 Facilities - Deleted, Not Applicable

2.4 Contract Management

2.4.1 Contractor Personnel Qualifications

All persons assigned by the Contractor to perform work must be employees of the Contractor or its majority-owned subsidiaries, or a State-approved Subcontractor, and must be fully qualified to perform the work assigned to them. The Contractor must include this requirement in any subcontract.

2.4.2 Contractor Key Personnel – Deleted, Not Applicable

2.4.3 Removal or Reassignment of Personnel at the State's Request – Deleted, Not Applicable

2.4.4 Contractor Personnel Location – Deleted, Not Applicable

2.4.5 Contractor Identification

The Contractor's employees must be clearly identifiable while on State property and must clearly identify themselves and the company they work for whenever making contact with State personnel by telephone or other means.

2.4.6 Cooperation with Third Parties

The Contractor and its Subcontractors must cooperate with the State and its agents and other contractors, including the State's quality assurance personnel. The Contractor must provide reasonable access to its personnel, systems, and facilities related to this Contract to the extent that access will not interfere with or jeopardize the safety or operation of the systems or facilities.

2.4.7 Relationship of the Parties

The relationship between the State and Contractor is that of client and independent contractor. No agent, employee, or servant of the Contractor, or any of its subcontractors, is an employee, agent or servant of the State. The Contractor will be solely and entirely responsible for its acts and the acts of its agents, employees, servants, and subcontractors during the performance of this Contract.

2.4.8 Contractor Return of State Equipment/Resources – Deleted, Not Applicable

2.4.9 Background Checks – Deleted, Not Applicable

2.4.10 Compliance With State Policies – Deleted, Not Applicable

2.5 Subcontracting by Contractor

2.5.1 Contractor Responsible

The Contractor is responsible for the completion of all Deliverable(s). The State will consider the Contractor to be the sole point of contact with regard to all contractual matters, including payment of any charges for Deliverable(s). The Contractor must make all payments to its Subcontractors or suppliers. Except as otherwise agreed in writing, the State is not obligated to make payments for the Deliverable(s) to any party other than the Contractor.

2.5.2 State Approval of Subcontractor

(a) The Contractor may not delegate any duties under this Contract to a Subcontractor unless DTMB-Procurement gives prior approval to the delegation. The State is entitled to receive copies of and review all subcontracts. The Contractor may delete or redact any proprietary information before providing it to the State.

(b) The State may require the Contractor to terminate and replace any Subcontractor the State reasonably finds unacceptable. The required replacement of a Subcontractor must be written and contain reasonable detail outlining the State's reasons. If the State exercises this right, and the Contractor cannot immediately replace the Subcontractor, the State will agree to an equitable adjustment in the schedule or other terms that may be affected by the State's required replacement. If this requirement results in a delay, the delay will not be counted against any applicable Service Level Agreement (SLA).

2.5.3 Subcontract Requirements

Except where specifically approved by the State, Contractor must include the obligations in Sections 2.24.2, Media Releases, 2.4, Contract Management, 2.11, Confidentiality, 2.12, Records and Inspections, 2.13, Warranties, 2.14, Insurance, and 2.23, Laws, in all of its agreements with Subcontractors.

2.5.4 Competitive Selection

Contractor must select Subcontractors (including suppliers) on a competitive basis to the maximum practical extent consistent with the objectives and requirements of this Contract.

2.6 Reserved

2.7 Performance

2.7.1 Time of Performance

(a) The Contractor must immediately notify the State upon becoming aware of any circumstances that may reasonably be expected to jeopardize the completion of any Deliverable(s) by the scheduled due dates in the latest State-approved delivery schedule and must inform the State of the projected actual delivery date.

(b) If the Contractor believes that a delay in performance by the State has caused or will cause the Contractor to be unable to perform its obligations according to specified Contract time periods, the Contractor must immediately notify the State and, to the extent practicable, continue to perform its obligations according to this Contract time periods. The Contractor will not be in default for a delay in performance to the extent the delay is caused by the State.

2.7.2 Service Level Agreements - Deleted, Not Applicable

2.7.3 Liquidated Damages – Deleted, Not Applicable

2.7.4 Excusable Failure

Neither party will be liable for any default, damage or delay in the performance of its obligations that is caused by government regulations or requirements, power failure, electrical surges or current fluctuations, war, forces of nature or acts of God, delays or failures of transportation, equipment shortages, suppliers' failures, acts or omissions of common carriers, fire, riots, civil disorders, labor disputes, embargoes, injunctions (provided the injunction was not issued as a result of any fault or negligence of the party seeking to have its default or delay excused), or any other cause beyond the reasonable control of a party; provided the non-performing party and any Subcontractors are without fault in causing the default or delay, and the default or delay could not have been prevented by reasonable precautions and cannot reasonably be circumvented by the non-performing party through the use of alternate sources, workaround plans, or other means, including disaster recovery plans.

If a party does not perform its contractual obligations for any of the reasons listed, the non-performing party will be excused from any further performance of its affected obligation(s) for as long as the circumstances prevail. The non-performing party must promptly notify the other party immediately after the excusable failure occurs, and when it abates or ends. Both parties must use commercially reasonable efforts to resume performance.

If any of the reasons listed substantially prevent, hinder, or delay the Contractor's performance of the Deliverable(s) for more than 10 Days, and the State reasonably determines that performance is not likely to be resumed within a period of time that is satisfactory to the State, the State may: (a) procure the affected Deliverable(s) from an alternate source without liability for payment so long as the delay in performance continues; or (b) terminate any portion of this Contract so affected and equitably adjust charges payable to the Contractor to reflect those Deliverable(s) that are terminated. The State must pay for all Deliverable(s) for which Final Acceptance has been granted before the termination date.

The Contractor will not have the right to any additional payments from the State as a result of any Excusable Failure or to payments for Deliverable(s) not provided as a result of the Excusable Failure. The Contractor will not be relieved of a default or delay caused by acts or omissions of its Subcontractors except to the extent that a Subcontractor experiences an Excusable Failure and the Contractor cannot reasonably circumvent the effect of the Subcontractor's default or delay in performance through the use of alternate sources, workaround plans, or other means, including disaster recovery plans.

2.8 Acceptance of Deliverable(s)

2.8.1 Quality Assurance

By tendering any Deliverable to the State, the Contractor certifies to the State that (a) it has performed reasonable quality assurance activities; (b) it has performed any reasonable testing; and (c) it has corrected all material deficiencies discovered during the quality assurance activities and testing. To the extent that testing occurs at State Locations, the State is entitled to observe and otherwise participate in the testing.

2.8.2 Delivery Responsibilities

Unless otherwise specified by the State in Section 1.4.5, Delivery Term, the following are applicable to all deliveries:

(a) The Contractor is responsible for delivering and unloading the Deliverable(s) by the applicable delivery date to the location(s) specified in the SOW or individual Purchase Order.

(b) The Contractor must ship the Deliverable(s) "F.O.B. Destination."

(c) The State will examine all packages at the time of delivery. The quantity of packages delivered must be recorded and any obvious visible or suspected damage must be noted at the time of delivery using the shipper's delivery document(s) and appropriate procedures to record the damage.

2.8.3 Process for Acceptance of Deliverable(s)

The State's review period for acceptance of the Deliverable(s) is governed by the applicable Statement of Work, and if the Statement of Work does not specify the State's review period, it is by default 30 Days for a Deliverable (State Review Period). The State will notify the Contractor by the end of the State Review Period that either:

(a) the Deliverable is accepted in the form delivered by the Contractor;

(b) the Deliverable is accepted, but noted deficiencies must be corrected; or

(c) the Deliverable is rejected along with notation of any deficiencies that must be corrected before acceptance of the Deliverable.

If the State delivers to the Contractor a notice of deficiencies, the Contractor will correct the described deficiencies and within 30 Days resubmit the Deliverable(s) with an explanation that demonstrates all corrections have been made to the original Deliverable(s). The Contractor's correction efforts will be made at no additional charge. Upon receipt of a corrected Deliverable from the Contractor, the State will have a reasonable additional period of time, not to exceed 30 Days, to accept the corrected Deliverable.

2.8.4 Acceptance of Deliverable(s)

(a) The State's obligation to comply with any State Review Period is conditioned on the timely delivery of the Deliverable(s). The State Review Period will begin on the first Business Day following the State's receipt of the Deliverable(s).

(b) The State may inspect the Deliverable to confirm that all components have been delivered without material deficiencies. If the State determines that the Deliverable or one of its components has material deficiencies, the State may reject the Deliverable without performing any further inspection or testing.

(c) The State will only approve a Deliverable after confirming that it conforms to and performs according to its specifications without material deficiency. The State may, in its discretion, conditionally approve a Deliverable that contains material deficiencies if the State elects to permit the Contractor to correct those deficiencies post-approval. The Contractor remains responsible for working diligently to correct, within a reasonable time at the Contractor's expense, all deficiencies in the Deliverable that remain outstanding at the time of State approval.

(d) If, after three opportunities the Contractor is unable to correct all deficiencies, the State may: (i) demand that the Contractor cure the failure and give the Contractor additional time to do so at the sole expense of the Contractor; (ii) keep this Contract in force and perform, either itself or through other parties, whatever the Contractor has failed to do, and recover the difference between the cost to cure the deficiency and this Contract price plus an additional amount equal to 10% of the State's cost to cure the deficiency; or (iii) fully or partially terminate this Contract for default by giving notice to the Contractor. Notwithstanding the foregoing, the State cannot use, as a basis for exercising its termination rights under this Section, deficiencies

discovered in a repeat State Review Period that could reasonably have been discovered during a prior State Review Period.

(e) The State, at any time and in its reasonable discretion, may reject the Deliverable without notation of all deficiencies if the acceptance process reveals deficiencies in a sufficient quantity or of a sufficient severity that renders continuing the process unproductive or unworkable.

2.8.5 Process for Approval of Written Deliverable(s) - Deleted, Not Applicable

2.8.6 Process for Approval of Services - Deleted, Not Applicable

2.8.7 Final Acceptance – Deleted, Not Applicable

2.9 Ownership - Deleted, Not Applicable

2.10 State Standards - Deleted, Not Applicable

2.11 Confidentiality

2.11.1 Confidential Information

As used in this Section, "Confidential Information" means all information of the parties, except information that is:

(a) disclosable under the Michigan Freedom Of Information Act (FOIA);

(b) now available or becomes available to the public without breach of this Contract;

(c) released in writing by the disclosing party;

(d) obtained from a third party or parties having no obligation of confidentiality with respect to such information;

(e) publicly disclosed pursuant to federal or state law; or

(f) independently developed by the receiving party without reference to Confidential Information of the furnishing party.

2.11.2 Protection and Destruction of Confidential Information

(a) Each party must use the same care to prevent unauthorized disclosure of Confidential Information as it uses to prevent disclosure of its own information of a similar nature, but in no event less than a reasonable degree of care. Neither the Contractor nor the State will: (i) make any use of the Confidential Information of the other except as contemplated by this Contract; (ii) acquire any interest or license in or assert any lien against the Confidential Information of the other; or (iii) if requested to do so, refuse for any reason to promptly return the other party's Confidential Information.

(b) Each party will limit disclosure of the other party's Confidential Information to employees, agents, and Subcontractors who must have access to fulfill the purposes of this Contract. Disclosure to, and use by, a Subcontractor is permissible where: (i) use of a Subcontractor is authorized under this Contract; (ii) the disclosure is necessary or otherwise naturally occurs in connection with work that is within the Subcontractor's scope of responsibility; and (iii) Contractor obligates the Subcontractor in a written contract to maintain the State's Confidential Information in confidence. At the State's request, any employee of Contractor and of any Subcontractor having access to the State's Confidential Information may be required to execute a separate agreement to be bound by the confidentiality requirements of this Section.

(c) Upon termination of this Contract, Contractor must promptly return the State's Confidential Information or certify to the State that Contractor has destroyed all of the State's Confidential Information.

2.11.3 Exclusions

The provisions of Section 2.11, Confidentiality, will not apply where the receiving party is required by law to disclose the other party's Confidential Information, provided that the receiving party: (i) promptly provides the furnishing party with notice of the legal request; and (ii) assists the furnishing party in resisting or limiting the scope of the disclosure as reasonably requested by the furnishing party.

2.11.4 No Obligation to Disclose

Nothing contained in Section 2.11, Confidentiality, will be construed as obligating a party to disclose any particular Confidential Information to the other party.

2.11.5 Security Breach Notification

If Contractor breaches this Section, it must (i) promptly cure any deficiencies in Contractor's internal security controls; and (ii) comply with any applicable federal and state laws and regulations pertaining to unauthorized disclosures. Contractor and the State will cooperate to mitigate, to the extent practicable, the effects of any breach, intrusion, or unauthorized access, use, or disclosure. Contractor must notify the State of any unauthorized use or disclosure of Confidential Information, whether suspected or actual, within 10 days of becoming aware of the use or disclosure or a shorter time period as is reasonable under the circumstances. The State may require Contractor to purchase credit monitoring services for any individuals affected by the breach.

2.12 Records and Inspections

2.12.1 Inspection of Work Performed

The State's authorized representatives, at reasonable times and with 10 days prior notice, have the right to enter the Contractor's premises or any other places where work is being performed in relation to this Contract. The representatives may inspect, monitor, or evaluate the work being performed, to the extent the access will not reasonably interfere with or jeopardize the safety or operation of Contractor's systems or facilities. The Contractor must provide reasonable assistance for the State's representatives during inspections.

2.12.2 Retention of Records

(a) The Contractor must retain all financial and accounting records related to this Contract for a period of seven years after the Contractor performs any work under this Contract (Audit Period).

(b) If an audit, litigation, or other action involving the Contractor's records is initiated before the end of the Audit Period, the Contractor must retain the records until all issues arising out of the audit, litigation, or other action are resolved or until the end of the Audit Period, whichever is later.

2.12.3 Examination of Records

The State, upon 10 days' notice to the Contractor, may examine and copy any of the Contractor's records that relate to this Contract. The State does not have the right to review any information deemed confidential by the Contractor if access would require the information to become publicly available. This requirement also applies to the records of any parent, affiliate, or subsidiary organization of the Contractor, or any Subcontractor that performs services in connection with this Contract.

2.12.4 Audit Resolution

If necessary, the Contractor and the State will meet to review any audit report promptly after its issuance. The Contractor must respond to each report in writing within 30 days after receiving the report, unless the report specifies a shorter response time. The Contractor and the State must develop, agree upon, and monitor an action plan to promptly address and resolve any deficiencies, concerns, or recommendations in the report.

2.12.5 Errors

(a) If an audit reveals any financial errors in the records provided to the State, the amount in error must be reflected as a credit or debit on the next invoice and subsequent invoices until the amount is paid or refunded in full. However, a credit or debit may not be carried forward for more than four invoices or beyond the termination of this Contract. If a balance remains after four invoices, the remaining amount will be due as a payment or refund within 45 days of the last invoice on which the balance appeared or upon termination of this Contract, whichever is earlier.

(b) In addition to other available remedies, if the difference between the State's actual payment and the correct invoice amount, as determined by an audit, is greater than 10%, the Contractor must pay all reasonable audit costs.

2.13 Warranties

2.13.1 Warranties and Representations

The Contractor represents and warrants:

(a) It is capable of fulfilling and will fulfill all of its obligations under this Contract. The performance of all obligations under this Contract must be provided in a timely, professional, and workmanlike manner and must meet the performance and operational standards required under this Contract.

(b) The Contract appendices, attachments, and exhibits identify the equipment, software, and services necessary for the Deliverable(s) to comply with the Contract's requirements.

(c) It is the lawful owner or licensee of any Deliverable licensed or sold to the State by Contractor or developed by the Contractor for this Contract, and Contractor has all of the rights necessary to convey to the State the ownership rights or licensed use, as applicable, of any Deliverable(s). None of the Deliverable(s) provided by Contractor to the State, nor their use by the State, will infringe the patent, trademark, copyright, trade secret, or other proprietary rights of any third party.

(d) If the Contractor procures any equipment, software, or other Deliverable(s) for the State (including equipment, software, and other Deliverable(s) manufactured, re-marketed or otherwise sold by the Contractor or under the Contractor's name), then the Contractor must assign or otherwise transfer to the State or its designees, or afford the State the benefits of, any manufacturer's warranty for the Deliverable(s).

(e) The Contract signatory has the authority to enter into this Contract on behalf of the Contractor.

(f) It is qualified and registered to transact business in all locations where required.

(g) Neither the Contractor nor any affiliates, nor any employee of either, has, will have, or will acquire, any interest that would conflict in any manner with the Contractor's performance of its duties and responsibilities to the State or otherwise create an appearance of impropriety with respect to the award or performance of this Contract. The Contractor must notify the State about the nature of any conflict or appearance of impropriety within two days of learning about it.

(h) Neither the Contractor nor any affiliates, nor any employee of either, has accepted or will accept anything of value based on an understanding that the actions of the Contractor, its affiliates, or its employees on behalf of the State would be influenced. The Contractor must not attempt to influence any State employee by the direct or indirect offer of anything of value.

(i) Neither the Contractor nor any affiliates, nor any employee of either, has paid or agreed to pay any person, other than bona fide employees and consultants working solely for the Contractor or the affiliate, any fee, commission, percentage, brokerage fee, gift, or any other consideration, contingent upon or resulting from the award or making of this Contract.

(j) The Contractor arrived at its proposed prices independently, without communication or agreement with any other Contractor for the purpose of restricting competition. The Contractor did not knowingly disclose its quoted prices for this Contract to any other bidder before the award of the Contract. The Contractor made no attempt to induce any other person or entity to submit or not submit a proposal for the purpose of restricting competition.

(k) All financial statements, reports, and other information furnished by the Contractor to the State in connection with the award of this Contract fairly and accurately represent the Contractor's business, properties, financial condition, and results of operations as of the respective dates covered by the financial statements, reports, or other information. There has been no material adverse change in the Contractor's business, properties, financial condition, or results of operation.

(l) All written information furnished to the State by or for the Contractor in connection with the award of this Contract is true, accurate, and complete, and contains no false statement of material fact nor omits any material fact that would make the submitted information misleading.

(m) It will immediately notify DTMB-Procurement if any of the certifications, representations, or disclosures made in the Contractor's original bid response change after this Contract is awarded.

2.13.2 Warranty of Merchantability

The Deliverable(s) provided by the Contractor must be merchantable.

2.13.3 Warranty of Fitness for a Particular Purpose

The Deliverable(s) provided by the Contractor must be fit for the purpose(s) identified in this Contract.

2.13.4 Warranty of Title

The Contractor must convey good title to any Deliverable(s) provided to the State. All Deliverable(s) provided by the Contractor must be delivered free from any security interest, lien, or encumbrance of which the State, at the time of contracting, has no knowledge. Deliverable(s) provided by the Contractor must be delivered free of any rightful claim of infringement by any third person.

2.13.5 Equipment Warranty – Deleted, Not Applicable

2.13.6 New Deliverable(s)

The Contractor must provide new Deliverable(s) where the Contractor knows or has the ability to select between new or like-new Unless specified in Article 1, Statement of Work, equipment that is assembled from new or serviceable used parts that are like new in performance is acceptable only where the Contractor does not have knowledge or the ability to select one or the other.

2.13.7 Prohibited Products

Shipping of salvaged, distressed, outdated, or discontinued goods to any State agency will be considered a material default by the Contractor. The brand and product number offered for all items will remain consistent for the term of this Contract, unless DTMB-Procurement has approved a change order under Section 2.3.4, Contract Changes.

2.13.8 Consequences For Breach

In addition to any remedies available in law, if the Contractor breaches any of the warranties contained in Section 2.13, Warranties, the breach may be considered a material default.

2.14 Insurance

2.14.1 Liability Insurance

For the purpose of this Section, "State" includes its departments, divisions, agencies, offices, commissions, officers, employees, and agents.

(a) The following apply to all insurance requirements:

(i) The State, in its sole discretion, may approve the use of a fully-funded self-insurance program in place of any specified insurance identified in this Section.

(ii) Where specific coverage limits are listed in this Section, they represent the minimum acceptable limits. If the Contractor's policy contains higher limits, the State is entitled to coverage to the extent of the higher limits. The minimum limits of coverage specified are not intended, and may not be construed to limit any liability or indemnity of the Contractor to any indemnified party or other persons.

(iii) If the Contractor fails to pay any premium for a required insurance policy, or if any insurer cancels or significantly reduces any required insurance without the State's approval, the State may, after giving the Contractor at least 30 days' notice, pay the premium or procure similar insurance coverage from another company or companies. The State may deduct any part of the cost from any payment due the Contractor, or require the Contractor to pay that cost upon demand.

(iv) In the event the State approves the representation of the State by the insurer's attorney, the attorney may be required to be designated as a Special Assistant Attorney General by the Michigan Attorney General.

(b) The Contractor must:

(i) provide proof that it has obtained the minimum levels of insurance coverage indicated or required by law, whichever is greater. The insurance must protect the State from claims that are alleged or may arise or result from the Contractor's or a Subcontractor's performance, including any person directly or indirectly employed by the Contractor or a Subcontractor, or any person for whose acts the Contractor or a Subcontractor may be liable.

(ii) waive all rights against the State for the recovery of damages that are covered by the insurance policies the Contractor is required to maintain under this Section. The Contractor's failure to obtain and maintain the required insurance will not limit this waiver.

(iii) ensure that all insurance coverage provided relative to this Contract is primary and non-contributing to any comparable liability insurance (including self-insurance) carried by the State.
(iv) obtain insurance, unless the State approves otherwise, from any insurer that has an A.M. Best rating of "A" or better and a financial size of VII or better, or if those ratings are not available, a comparable rating from an insurance rating agency approved by the State. All policies of insurance must be issued by companies that have been approved to do business in the State.
(v) maintain all required insurance coverage throughout the term of this Contract and any extensions. However, in the case of claims-made Commercial General Liability policies, the Contractor must secure tail coverage for at least three years following the termination of this Contract.
(vi) pay all deductibles.
(vii) pay for and provide the type and amount of insurance checked below:

(A) Commercial General Liability Insurance

Minimal Limits:

$2,000,000 General Aggregate Limit other than Products/Completed Operations;
$2,000,000 Products/Completed Operations Aggregate Limit;
$1,000,000 Personal & Advertising Injury Limit; and
$1,000,000 Each Occurrence Limit.

Deductible maximum:

$50,000 Each Occurrence

Additional Requirements:

The Contractor must list the State of Michigan, its departments, divisions, agencies, offices, commissions, officers, employees, and agents as additional insureds on the Commercial General Liability certificate. The Contractor also agrees to provide evidence that insurance policies contain a waiver of subrogation by the insurance company.

(B) Umbrella or Excess Liability Insurance

Minimal Limits:

$10,000,000 General Aggregate

Additional Requirements:

Umbrella or Excess Liability limits must at least apply to the insurance required in (A), General Commercial Liability. The Contractor must list the State of Michigan, its departments, divisions, agencies, offices, commissions, officers, employees, and agents as additional insureds on the certificate. The Contractor also agrees to provide evidence that insurance policies contain a waiver of subrogation by the insurance company.

(C) Motor Vehicle Insurance

Minimal Limits:

If a motor vehicle is used in relation to the Contractor's performance, the Contractor must have vehicle liability insurance on the motor vehicle for bodily injury and property damage as required by law.

(D) Hired and Non-Owned Motor Vehicle Coverage

Minimal Limits:

$1,000,000 Per Accident

Additional Requirements:

The Contractor must list the State of Michigan, its departments, divisions, agencies, offices, commissions, officers, employees, and agents as additional insureds on the vehicle liability certificate. The Contractor must also provide evidence that insurance policies contain a waiver of subrogation by the insurance company.

(E) Workers' Compensation Insurance

Minimal Limits:

The Contractor must provide Workers' Compensation coverage according to applicable laws governing work activities in the state of the Contractor's domicile. If the applicable coverage is provided by a self-insurer, the Contractor must provide proof of an approved self-insured authority by the jurisdiction of domicile.

For employees working outside of the state of the Contractor's domicile, the Contractor must provide certificates of insurance proving mandated coverage levels for the jurisdictions where the employees' activities occur.

Additional Requirements:

The Contractor must provide the applicable certificates of insurance and a list of states where the coverage is applicable. Contractor must provide proof that the Workers' Compensation insurance policies contain a waiver of subrogation by the insurance company, except where such a provision is prohibited or limited by the laws of the jurisdiction in which the work is to be performed.

(F) Employers Liability Insurance

Minimal Limits:

$100,000 Each Accident;
$100,000 Each Employee by Disease
$500,000 Aggregate Disease

Additional Requirements:

The Contractor must list the State of Michigan, its departments, divisions, agencies, offices, commissions, officers, employees, and agents as additional insureds on the certificate.

2.14.2 Subcontractor Insurance Coverage

Except where the State has approved a subcontract with other insurance provisions, the Contractor must require any Subcontractor to purchase and maintain the insurance coverage required in Section 2.14.1, Liability Insurance. Alternatively, the Contractor may include a Subcontractor under the Contractor's insurance on the coverage required in that Section. The failure of a Subcontractor to comply with insurance requirements does not limit the Contractor's liability or responsibility.

2.14.3 Certificates of Insurance and Other Requirements

Before this Contract is signed, and not less than 20 days before the insurance expiration date every year thereafter, the Contractor must provide evidence that the State and its agents, officers, and employees are listed as additional insureds under each commercial general liability and commercial automobile liability policy. The Contractor must provide DTMB-Procurement with all applicable certificates of insurance verifying insurance coverage or providing satisfactory evidence of self-insurance as required in Section 2.14.1, Liability Insurance. Each certificate must be on the standard "accord" form or equivalent and MUST CONTAIN THE APPLICABLE CONTRACT OR PURCHASE ORDER NUMBER. Each certificate must be prepared and submitted by the insurer and must contain a provision indicating that the coverage afforded will not be cancelled, materially changed, or not renewed without 30 days prior notice, except for 10 days for nonpayment of premium, to the Director of DTMB-Procurement. The notice to the Director of DTMB-Procurement must include the applicable Contract or Purchase Order number.

2.15 Indemnification

2.15.1 General Indemnification

The Contractor must indemnify, defend, and hold the State harmless from liability, including all claims and losses, and all related costs and expenses (including reasonable attorneys' fees and costs of investigation, litigation, settlement, judgments, interest and penalties), accruing or resulting to any person, firm, or corporation that may be injured or damaged by the Contractor in the performance of this Contract and that are attributable to the negligence or tortious acts of the Contractor, any of its subcontractors, or by anyone else for whose acts any of them may be liable.

2.15.2 Code Indemnification - Deleted, Not Applicable

2.15.3 Employee Indemnification

In any claims against the State, its departments, agencies, commissions, officers, employees, and agents, by any employee of the Contractor or any of its subcontractors, the indemnification obligation will not be limited in any way by the amount or type of damages, compensation, or benefits payable by or for the Contractor or any of its subcontractors under worker's disability compensation acts, disability benefit acts, or other employee benefit acts. This indemnification clause is intended to be comprehensive. Any overlap in provisions, or the fact that greater specificity is provided as to some categories of risk, is not intended to limit the scope of indemnification under any other provisions.

2.15.4 Patent/Copyright Infringement Indemnification

(a) The Contractor must indemnify and hold the State harmless from liability, including all claims and losses, and all related costs and expenses (including reasonable attorneys' fees and costs of investigation, litigation, settlement, judgments, interest, and penalties) resulting from any action threatened or brought against the State to the extent that the action is based on a claim that any piece of equipment, software, commodity, or service supplied by the Contractor or its subcontractors, or its operation, use, or reproduction, infringes any United States patent, copyright, trademark or trade secret of any person or entity.

(b) If, in the State's or the Contractor's opinion, any piece of equipment, software, commodity or service supplied by the Contractor or its subcontractors, or its operation, use, or reproduction, is likely to become the subject of an infringement claim, the Contractor must, at its expense: (i) procure for the State the right to continue using the equipment, software, commodity or service or, if this option is not reasonably available to the Contractor; (ii) replace or modify to the State's satisfaction the same with equipment, software, commodity or service of equivalent function and performance so that it becomes non-infringing, or, if this option is not reasonably available to Contractor; (iii) accept its return by the State with appropriate credits to the State against the Contractor's charges and reimburse the State for any losses or costs incurred as a consequence of the State ceasing its use and returning it.

(c) Notwithstanding the foregoing, the Contractor has no obligation to indemnify or defend the State for, or to pay any costs, damages or attorneys' fees related to, any infringement claim based upon: (i) equipment, software, commodity or service developed based on written specifications of the State; (ii) use of the equipment, software, or commodity in a configuration other than implemented or approved by the Contractor, including any modification of the same by the State; or (iii) the combination, operation, or use of the equipment, software, or commodity with equipment, software, or commodities not supplied by the Contractor under this Contract.

2.15.5 Continuing Obligation

The Contractor's duty to indemnify under Section 2.15, Indemnification, continues in full force and effect, notwithstanding the expiration or early cancellation of this Contract, with respect to any claims based on facts or conditions that occurred before expiration or cancellation.

2.15.6 Indemnification Procedures

These procedures apply to all indemnity obligations:

(a) After the State receives notice of an action or proceeding involving a claim for which it will seek indemnification, the State must promptly notify the Contractor of the claim and take, or assist the Contractor in taking, any reasonable action to avoid a default judgment against the Contractor. Failure to notify the Contractor does not relieve the Contractor of its indemnification obligations except to the extent that the Contractor can prove damages attributable to the notification failure. Within 10 days following receipt of notice from the State relating to any claim, the Contractor must notify the State whether the Contractor agrees to assume control of the defense and settlement of that claim (a "Notice of Election"). After notifying the Contractor of a claim and before the State receives the Contractor's Notice of Election, the State is entitled to defend against the claim, at the Contractor's expense, and the Contractor will be responsible for any reasonable costs, including attorney fees, incurred by the State in defending against the claim during that period.

(b) If the Contractor delivers a Notice of Election relating to any claim: (i) the State is entitled to participate in the defense of the claim and to employ counsel at its own expense to assist in handling the claim and to monitor and advise the State about the status and progress of the defense; (ii) the Contractor must, at the request of the State, demonstrate the Contractor's financial ability to carry out its defense and indemnity obligations under this Contract; (iii) the Contractor must periodically advise the State about the status and progress of the defense and must obtain prior approval of the State before entering into any settlement of the claim or ceasing to defend against the claim; and (iv) to the extent that any principles of Michigan governmental or public law may be involved or challenged, the State has the right, at its own expense, to control the defense of that portion of the claim. The State may retain control of the defense and settlement of a claim by notifying the Contractor within 10 days after the State's receipt of the Contractor's information requested by the State under clause (ii) of this paragraph, if the State determines that the Contractor has failed to demonstrate to the reasonable satisfaction of the State the Contractor's financial ability to carry out its defense and indemnity obligations under this Section. Any litigation activity on behalf of the State, or any of its subdivisions under this Section, must be coordinated with the Department of Attorney General. In the event the insurer's attorney represents the State under this Section, the insurer's attorney may be required to be designated as a Special Assistant Attorney General by the Attorney General of the State of Michigan.

(c) If the Contractor does not deliver a Notice of Election relating to any claim of which it is notified, the State may defend the claim in a manner it deems appropriate, at the cost and expense of the Contractor. If it is determined that the claim was one against which the Contractor was required to indemnify the State, upon request of the State, the Contractor must promptly reimburse the State for all reasonable costs and expenses.

2.15.7 Limitation of Liability

Neither the Contractor nor the State is liable to each other, regardless of the form of action, for consequential, incidental, indirect, or special damages. This limitation of liability does not apply to claims for infringement of United States patent, copyright, trademark or trade secrets; to claims for personal injury or damage to property caused by the gross negligence or willful misconduct of the Contractor; to claims covered by other specific provisions of this Contract calling for liquidated damages; or to court costs or attorneys' fees awarded by a court in addition to damages after litigation based on this Contract.

2.16 Termination by the State

2.16.1 Notice and Right to Cure

If the Contractor breaches the Contract, and the State, in its sole discretion, determines that the breach is curable, the State will provide the Contractor notice of the breach and a period of at least 30 days to cure the breach. The State does not need to provide notice or an opportunity to cure for successive or repeated breaches or if the State determines, in its sole discretion, that a breach poses a serious and imminent threat to the health or safety of any person or the imminent loss, damage, or destruction of any real or tangible personal property.

2.16.2 Termination for Cause

(a) The State may fully or partially terminate this Contract for cause by notifying the Contractor if the Contractor: (i) breaches any of its material duties or obligations (including a Chronic Failure to meet any SLA); or (ii) fails to cure a breach within the time period specified in a notice of breach provided by the State.

(b) The Contractor must pay all reasonable costs incurred by the State in terminating this Contract for cause, including administrative costs, attorneys' fees and court costs, and any additional costs the State incurs to procure the Deliverable(s) from other sources. Re-procurement costs are not consequential, indirect, or incidental damages, and cannot be excluded by any other terms otherwise included in this Contract, provided the costs are not in excess of 50% more than the prices for the Deliverable(s).

(c) If the State partially terminates this Contract for cause, any charges payable to the Contractor will be equitably adjusted to reflect those Deliverable(s) that are terminated. The State must pay for all Deliverable(s) for which Final Acceptance has been granted before the termination date. Any services or related provisions of this Contract that are terminated for cause must cease on the effective date of the termination.

(d) If the State terminates this Contract for cause and it is determined, for any reason, that the Contractor was not in breach of the Contract, the termination will be deemed to have been a termination under Section 2.16.3, Termination for Convenience, effective as of the same date, and the rights and obligations of the parties will be limited to those provided in that Section.

2.16.3 Termination for Convenience

The State may fully or partially terminate this Contract for its convenience if the State determines that a termination is in the State's best interest. Reasons for the termination are within the sole discretion of the State and may include: (a) the State no longer needs the Deliverable(s) specified in this Contract; (b) a relocation of office, program changes, or changes in laws, rules, or regulations make the Deliverable(s) no longer practical or feasible for the State; (c) unacceptable prices for Contract changes; or (d) falsification or misrepresentation, by inclusion or non-inclusion, of information material to a response to any ITB issued by the State. The State may terminate this Contract for its convenience by giving Contractor notice at least 30 days before the date of termination. If the State chooses to terminate this Contract in part, any charges payable to the Contractor must be equitably adjusted to reflect those Deliverable(s) that are terminated.

2.16.4 Termination for Non-Appropriation

(a) If this Contract extends for more than one fiscal year, continuation of this Contract is subject to the appropriation or availability of funds. If sufficient funds to enable the State to continue payment are not appropriated or otherwise made available, the State must fully or partially terminate this Contract at the end of the last period for which funds have been appropriated or otherwise made available The State must give the Contractor notice at least 30 days before the date of termination, unless the State receives notice of the non-appropriation or unavailability less than 30 days before the end of the last period for which funds have been appropriated or otherwise made available.

(b) If funding for this Contract is reduced by law, or funds to pay the Contractor for the Deliverable(s) are not appropriated or are otherwise unavailable, the State may, upon 30 days' notice to the Contractor, change the Deliverable(s) in the manner and for the periods of time the State may elect. The charges payable under this Contract will be equitably adjusted to reflect any Deliverable(s) not provided because of the reduction.

(c) If the State fully or partially terminates this Contract for non-appropriation, the State must pay the Contractor for all work-in-progress performed through the effective date of the termination to the extent funds are available.

2.16.5 Termination for Criminal Conviction

The State may terminate this Contract immediately and without further liability or penalty if the Contractor, an officer of the Contractor, or an owner of a 25% or greater share of the Contractor is convicted of a criminal offense related to a State, public, or private Contract or subcontract.

2.16.6 Termination for Approvals Rescinded

The State may terminate this Contract if any final administrative or judicial decision or adjudication disapproves a previously approved request for purchase of personal services under Constitution 1963, Article 11, § 5, and Civil Service Rule 7-1. In that case, the State will pay the Contractor for all work-in-progress performed through the effective date of the termination. The Contract may be fully or partially terminated and will be effective as of the date stated in the notice.

2.16.7 Rights and Obligations upon Termination

(a) If the State terminates this Contract for any reason, the Contractor must:

(i) stop all work as specified in the notice of termination;

(ii) take any action that may be necessary, or that the State may direct, to preserve and protect Deliverable(s) or other State property in the Contractor's possession;

(iii) return all materials and property provided directly or indirectly to the Contractor by any entity, agent, or employee of the State;

(iv) transfer title in and deliver to the State, unless otherwise directed, all Deliverable(s) intended to be transferred to the State at the termination of the Contract (which will be provided

to the State on an "As-Is" basis except to the extent the State compensated the Contractor for warranty services related to the materials);

(v) to the maximum practical extent, take any action to mitigate and limit potential damages, including terminating or limiting subcontracts and outstanding orders for materials and supplies; and

(vi) take all appropriate action to secure and maintain State information confidentially in accordance with Section 2.11, Confidentiality.

(b) If the State terminates this Contract under Section 2.16.3, Termination for Convenience, the State must pay the Contractor all charges due for Deliverable(s) provided before the date of termination and, if applicable, as a separate item of payment, for work-in-progress, based on a percentage of completion determined by the State. All completed or partially completed Deliverable(s) prepared by the Contractor, at the option of the State, become the State's property, and the Contractor is entitled to receive equitable compensation for those Deliverable(s). Regardless of the basis for the termination, the State is not obligated to pay or otherwise compensate the Contractor for any lost expected future profits, costs, or expenses incurred with respect to Deliverable(s) not actually completed.

(c) If the State terminates this Contract for any reason, the State may assume, at its option, any subcontracts and agreements for Deliverable(s), and may pursue completion of the Deliverable(s) by replacement contract or as the State deems expedient.

2.16.8 Reservation of Rights

In the event of any full or partial termination of this Contract, each party reserves all rights or remedies otherwise available to the party.

2.16.9 Contractor Transition Responsibilities – Deleted, Not Applicable

2.16.10 Transition Payments – Deleted, Not Applicable

2.17 Termination by the Contractor

2.17.1 Termination

If the State breaches the Contract and the Contractor, in its sole discretion, determines that the breach is curable, then the Contractor will provide the State with notice of the breach and a time period (not less than 30 days) to cure the breach.

The Contractor may terminate this Contract if the State: (a) materially breaches its obligation to pay the Contractor undisputed amounts due; (b) breaches its other obligations to an extent that makes it impossible or commercially impractical for the Contractor to complete the Deliverable(s); or (c) does not cure the breach within the time period specified in a notice of breach. The Contractor must discharge its obligations under Section 2.20, Dispute Resolution, before it terminates the Contract.

2.18 Stop Work

2.18.1 Stop Work Order – Deleted, Not Applicable

2.18.2 Termination of Stop Work Order – Deleted, Not Applicable

2.18.3 Allowance of the Contractor's Costs – Deleted, Not Applicable

2.19 Reserved

2.20 Dispute Resolution

2.20.1 General

(a) The Contractor must submit any claim related to this Contract to the State under Section 2.3.6, Notices, together with all supporting documentation for the claim.

(b) The representatives of the Contractor and the State must meet as often as the parties reasonably deem necessary to gather and furnish to each other all information related to the claim.

(c) During the course of negotiations, each party will honor all reasonable requests made by the other for non-privileged information reasonably related to the claim.

2.20.2 Informal Dispute Resolution

(a) If, after a reasonable time following submission of a claim under Section 2.20.1, General, the parties are unable to resolve the claim, the parties must meet with the Director of DTMB-Procurement, or his or her designee, for the purpose of attempting to resolve the dispute without the need for formal legal proceedings.

(b) Within 60 calendar days of the meeting with the Director of DTMB-Procurement, or such other time as agreed to by the parties, the Director of DTMB-Procurement will issue a written recommendation regarding settlement of the claim. The Contractor must notify DTMB-Procurement within 21 days after the recommendation is issued whether the Contractor accepts or rejects the recommendation. Acceptance by the Contractor constitutes the final resolution of the claim addressed in the recommendation, and the Contractor may not assert that claim in any future litigation or other proceeding between the parties.

(c) The recommendation of the Director of DTMB-Procurement is not admissible in any future litigation or other proceeding between the parties. The conduct and statements made during the course of negotiations or dispute resolution under Section 2.20, Dispute Resolution, are subject to Michigan Rule of Evidence 408 and are not admissible in any future litigation or other proceeding between the parties.

(d) This section will not be construed to prohibit either party from instituting formal proceedings to avoid the expiration of any applicable limitations period, to preserve a superior position with respect to other creditors, or under Section 2.20.3, Injunctive Relief.

(e) DTMB-Procurement will not mediate disputes between the Contractor and any other entity, except State agencies, concerning responsibility for performance of work.

2.20.3 Injunctive Relief

A claim between the State and the Contractor is not subject to the provisions of Section 2.20.2, Informal Dispute Resolution, where a party makes a good faith determination that a breach of the Contract by the other party will result in damages so immediate, so large or severe, and so incapable of adequate redress that a temporary restraining order or other injunctive relief is the only adequate remedy.

2.20.4 Continued Performance

Each party will continue performing its obligations under the Contract while a claim is being resolved, except to the extent the claim precludes performance and without limiting either party's right to terminate the Contract as provided in Section 2.16, Termination by the State or Section 2.17, Termination by the Contractor. A claim involving payment does not preclude performance.

2.21 Disclosure Responsibilities

2.21.1 Disclosure of Litigation

(a) Within 30 days after receiving notice of any litigation, investigation, arbitration, or other proceeding (collectively, "Proceeding") that arises during the term of this Contract, the Contractor must disclose the following to the Contract Administrator:

(i) A criminal Proceeding involving the Contractor (or any Subcontractor) or any of its officers or directors;

(ii) A parole or probation Proceeding;

(iii) A Proceeding involving the Contractor (or any Subcontractor) or any of its officers or directors under the Sarbanes-Oxley Act; and

(iv) A civil Proceeding to which the Contractor (or, if the Contractor is aware, any Subcontractor) is a party, and which involves (A) a claim that might reasonably be expected to

adversely affect the viability or financial stability of the Contractor or any Subcontractor; or (B) a claim or written allegation of fraud against the Contractor (or, if the Contractor is aware, any Subcontractor) by a governmental or public entity arising out of the Contractor's business dealings with governmental or public entities.

(b) Information provided to the State from the Contractor's publicly filed documents will satisfy the requirements of this Section.

(c) If any Proceeding that is disclosed to the State or of which the State otherwise becomes aware, during the term of this Contract, would cause a reasonable party to be concerned about: (i) the ability of the Contractor (or a Subcontractor) to continue to perform this Contract; or (ii) whether the Contractor (or a Subcontractor) is engaged in conduct that is similar in nature to the conduct alleged in the Proceeding and would constitute a breach of this Contract or a violation of federal or state law, regulations, or public policy, then the Contractor must provide the State all requested reasonable assurances that the Contractor and its Subcontractors will be able to continue to perform this Contract.

2.21.2 Other Disclosures

The Contractor must notify DTMB-Procurement within 30 days of:

(a) becoming aware that a change in the Contractor's ownership or officers has occurred or is certain to occur; or

(b) any changes to company affiliations.

2.21.3 Call Center Disclosure – Deleted, Not Applicable

2.22 Extended Purchasing – Deleted, Not Applicable

2.23 Laws

2.23.1 Governing Law

This Contract is governed by, and construed according to, the substantive laws of the State of Michigan without regard to any Michigan choice of law rules that would apply the substantive law of another jurisdiction to the extent not inconsistent with or preempted by federal law.

2.23.2 Compliance with Laws

The Contractor must comply with all applicable federal, state, and local laws and ordinances in providing the Deliverable(s).

2.23.3 Jurisdiction

Any dispute arising from the Contract must be resolved in the State of Michigan. With respect to any claim between the parties, the Contractor consents to venue in Ingham County, Michigan, and irrevocably waives any objections to this venue that it may have, such as lack of personal jurisdiction or *forum non conveniens*. The Contractor must appoint agents in the State of Michigan to receive service of process.

2.23.4 Nondiscrimination

In the performance of the Contract, the Contractor agrees not to discriminate against any employee or applicant for employment, with respect to his or her hire, tenure, terms, conditions or privileges of employment, or any matter directly or indirectly related to employment, because of race, color, religion, national origin, ancestry, age, sex, height, weight, marital status, or physical or mental disability. The Contractor further agrees that every subcontract entered into for the performance of this Contract will contain a provision requiring non-discrimination in employment, as specified here, binding upon each Subcontractor. This covenant is required under the Elliott-Larsen Civil Rights Act, 1976 PA 453, MCL 37.2101, *et seq*., and the Persons with Disabilities Civil Rights Act, 1976 PA 220, MCL 37.1101, *et seq*., and any breach of this provision may be regarded as a material breach of the Contract.

2.23.5 Unfair Labor Practices

Under 1980 PA 278, MCL 423.321, *et seq*., the State must not award a Contract or subcontract to an employer whose name appears in the current register of employers failing to correct an unfair labor practice compiled under MCL 423.322. This information is compiled by the United States National Labor Relations Board. A Contractor of the State, in relation to the Contract, must not enter into a contract with a Subcontractor, manufacturer, or supplier whose name appears in this register. Under MCL 423.324, the State may void any Contract if, after award of the Contract, the name of the Contractor as an employer or the name of the Subcontractor, manufacturer or supplier of the Contractor appears in the register.

2.23.6 Environmental Provision

For the purposes of this section, "Hazardous Materials" include asbestos, ACBMs, PCBs, petroleum products, construction materials including paint thinners, solvents, gasoline, oil, and any other material the manufacture, use, treatment, storage, transportation or disposal of which is regulated by the federal, state, or local laws governing the protection of the public health, natural resources, or the environment:

(a) The Contractor must use, handle, store, dispose of, process, transport, and transfer any Hazardous Material according to all federal, State, and local laws. The State must immediately advise the Contractor of the presence of any known Hazardous Material at the work site. If the Contractor encounters material reasonably believed to be Hazardous Material that may present a substantial danger, the Contractor must: (i) immediately stop all affected work; (ii) notify the State in accordance with Section 2.3.6, Notices; (iii) notify any entities required by law; and (iv) take appropriate health and safety precautions.

(b) The State may issue a Stop Work Order if the material is a Hazardous Material that may present a substantial danger and the Hazardous Material was not brought to the site by the Contractor, or does not wholly or partially result from any violation by the Contractor of any laws covering the use, handling, storage, disposal of, processing, transport and transfer of Hazardous Materials. The State may remove the Hazardous Material, render it harmless, or terminate the affected work for the State's convenience.

(c) If the Hazardous Material was brought to the site by the Contractor, or wholly or partially results from any violation by the Contractor of any laws covering the use, handling, storage, disposal of, processing, transport and transfer of Hazardous Material, or from any other act or omission within the control of the Contractor, the Contractor must bear its proportionate share of the delay and costs involved in cleaning up the site and removing and rendering harmless the Hazardous Material according to applicable laws.

2.23.7 Freedom of Information

This Contract and all information submitted to the State by the Contractor is subject to the Michigan Freedom of Information Act (FOIA), 1976 PA 442, MCL 15.231, *et seq*.

2.23.8 Workplace Safety and Discriminatory Harassment - Deleted, Not Applicable

2.23.9 Prevailing Wage - Deleted, Not Applicable

2.23.10 Abusive Labor Practices

The Contractor may not furnish any Deliverable(s) that were produced fully or partially by forced labor, convict labor, forced or indentured child labor, or indentured servitude.

“Forced or indentured child labor” means all work or service (1) exacted from any person under the age of 18 under the menace of any penalty for its nonperformance and for which the worker does not offer himself voluntarily; or (2) performed by any person under the age of 18 under a contract the enforcement of which can be accomplished by process or penalties.

2.24 General Provisions

2.24.1 Bankruptcy and Insolvency

The State may, without prejudice to any other right or remedy, fully or partially terminate this Contract and, at its option, take possession of the work-in-progress and finish the work-in-progress by whatever method the State deems appropriate if:

(a) the Contractor files for bankruptcy protection;
(b) an involuntary petition is filed against the Contractor and not dismissed within 30 days;
(c) the Contractor becomes insolvent or a receiver is appointed due to the Contractor's insolvency;
(d) the Contractor makes a general assignment for the benefit of creditors; or
(e) the Contractor or its affiliates are unable to provide reasonable assurances that the Contractor or its affiliates can provide the Deliverable(s) under this Contract.

Contractor will place appropriate notices or labels on the work-in-progress to indicate ownership by the State. To the extent reasonably possible, work-in-progress must be stored separately from other stock and marked conspicuously with labels indicating State ownership.

2.24.2 Media Releases

News releases (including promotional literature and commercial advertisements) pertaining to the ITB and this Contract or the project to which it relates will not be made without prior approval by the State, and only in accordance with the instructions from the State.

2.24.3 Contract Distribution

DTMB-Procurement retains the sole right of Contract distribution to all State agencies and local units of government unless other arrangements are authorized by DTMB-Procurement.

2.24.4 Permits

Contractor must obtain and pay any associated costs for all required governmental permits, licenses, and approvals for the delivery, installation, and performance of the Contract.

2.24.5 Website Incorporation

The State is not bound by any content on the Contractor's website unless incorporated directly into this Contract.

2.24.6 Future Bidding Preclusion - Deleted, Not Applicable

2.24.7 Antitrust Assignment

The Contractor assigns to the State any claim for overcharges resulting from state or federal antitrust violations to the extent that those violations concern materials or services supplied by third parties toward fulfillment of the Contract.

2.24.8 Disaster Recovery

Contractor and the State recognize that the State provides essential services in times of natural or man-made disasters. Therefore, except as mandated by federal disaster response requirements, Contractor personnel dedicated to providing Deliverable(s) under this Contract will provide the State with priority.

2.24.9 Legal Effect

The State is not liable for costs incurred by the Contractor or for payment(s) under this Contract until the Contractor is authorized to perform under Section 1.2.4, Ordering.

2.24.10 Entire Agreement

This Contract constitutes the entire agreement between the parties and supersedes all prior agreements, whether written or oral, with respect to the subject matter. All attachments referenced in this Contract are incorporated in their entirety and form part of this Contract.

2.24.11 Order of Precedence

Any inconsistency in the terms associated with this Contract will be resolved by giving precedence to the terms in the following descending order:

(a) Mandatory sections (2.1.1, Contract Term, 2.24.9, Legal Effect, 2.2.2, Payment Deadlines, 2.14, Insurance, 2.15, Indemnification, 2.16, Termination, 2.23, Governing Law, 2.15.7, Limitation of Liability);

(b) The most recent Statement of Work related to this Contract;
(c) All sections from Article 2 - Terms and Conditions, not listed in subsection (a);
(d) Any attachment or exhibit to the Contract documents;
(e) Any Purchase Order, Direct Voucher, or Procurement Card Order issued under the Contract; and
(f) Bidder Responses contained in any of the ITB documents.

2.24.12 Headings

The captions and section headings used in this Contract are for convenience only and may not be used to interpret the scope and intent of this Contract.

2.24.13 Form, Function and Utility – Deleted, Not Applicable

2.24.14 Reformation and Severability

Each provision of the Contract is severable from all other provisions of the Contract. If any provision of this Contract is held unenforceable, then the Contract will be modified to reflect the parties' original intent. All remaining provisions of the Contract remain in full force and effect.

2.24.15 Approval

Unless otherwise provided in this Contract, approval(s) must be in writing and must not be unreasonably withheld or delayed.

2.24.16 No Waiver of Default

Failure by a party to insist upon strict adherence to any term of the Contract does not waive that party's right to later insist upon strict adherence to that term, or any other term, of the Contract.

2.24.17 Survival

The provisions of this Contract that impose continuing obligations, including warranties, indemnification, and confidentiality, will survive the expiration or termination of this Contract.

2.24.18 PCI Data Security Standard

(a) Contractors that process, transmit or store credit/debit cardholder data, must adhere to the Payment Card Industry (PCI) Data Security Standards. The Contractor is responsible for the security of cardholder data in its possession. The data may only be used to assist the State or for other uses specifically authorized by law.

(b) The Contractor must notify the CCI (within 72 hours of discovery) of any breaches in security where cardholder data has been compromised. In that event, the Contractor must provide full cooperation to the Visa, MasterCard, Discover and state Acquirer representative(s), and/or a PCI approved third party to conduct a thorough security review. The Contractor must make the forensic report available within two weeks of completion. The review must validate compliance with the current PCI Data Security Standards for protecting cardholder data.

(c) The Contractor must properly dispose of cardholder data, in compliance with DTMB policy, when it is no longer needed. The Contractor must continue to treat cardholder data as confidential upon contract termination.

(d) The Contractor must provide the CCI with an annual Attestation of Compliance (AOC) or a Report on Compliance (ROC) showing the contractor is in compliance with the PCI Data Security Standards. The Contractor must notify the CCI of all failures to comply with the PCI Data Security Standard.

Attachment A, Drawing

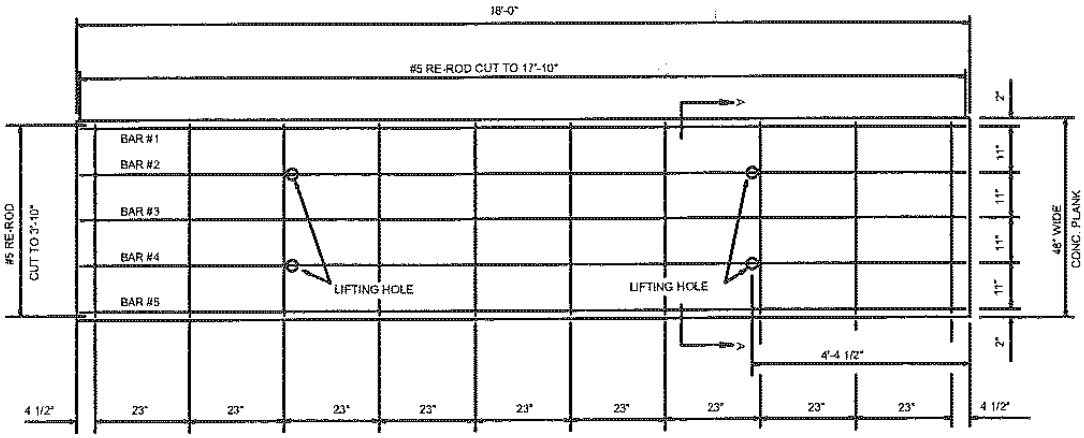

PRECAST
CONCRETE PLANK

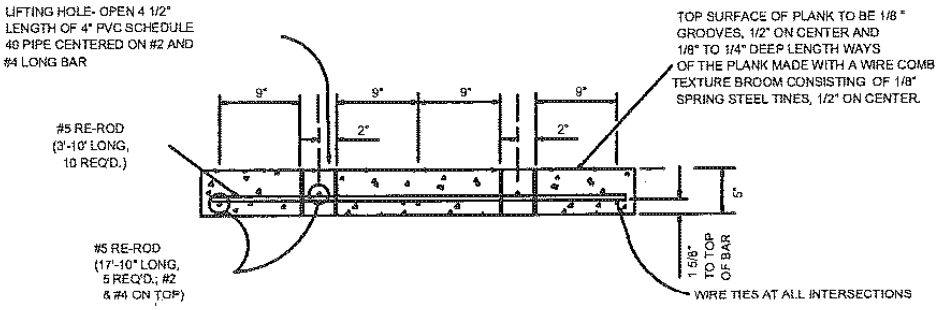

SECTION A - A

A.R.E.A. #4 CRUSHED STONE

100% PASSING 2" SIEVE OPENING
90-100% PASSING 1 1/2" SIEVE OPENING
20- 55% PASSING 1" SIEVE OPENING
0- 15% PASSING 3/4" SIEVE OPENING
0- 5% PASSING 3/8" SIEVE OPENING

A.R.E.A.=AMERICAN RAILROAD ENGINEERING ASSOCIATION

MICHIGAN DEPARTMENT of NATURAL RESOURCES		PARKS & RECREATION BUREAU		TYPICAL PLANK FOR BOTH THE UPPER AND LOWER PENINSULA
		DATE: 1-1-2003	PAGE B3.3	

Attachment B, Pricing

Item No.	Unit	Comm. Code	Description	Unit Price
1.	EA	750-30	Pre-Cast Concrete Planks for ramps at Boating Access Sites; delivered to locations in the **Lower Peninsula**. Per State of Michigan, Department of Natural Resource Specifications and Drawing B3.3 dated 1-1-2003, (1 page)	$ 279.50
1.	EA	750-30	Pre-Cast Concrete Planks for ramps at Boating Access Sites; delivered to locations in the **Upper Peninsula**. Per State of Michigan, Department of Natural Resource Specifications and Drawing B3.3 dated 1-1-2003, (1 page)	$ 340.00