Form No. DMB 234 (Rev. 1/96)
AUTHORITY: Act 431 of 1984
COMPLETION: Required
PENALTY: Contract will not be executed unless form is filed

STATE OF MICHIGAN
DEPARTMENT OF MANAGEMENT AND BUDGET
PURCHASING OPERATIONS
P.O. BOX 30026, LANSING, MI 48909
OR
530 W. ALLEGAN, LANSING, MI 48933

July 26, 2010

CHANGE NOTICE NO. 6
TO
CONTRACT NO. 071B7200013
between
THE STATE OF MICHIGAN
and

NAME & ADDRESS OF VENDOR	TELEPHONE: Mervin Teague **(248) 477-8700**
Carrier & Gable, Inc. **24110 Research Drive** **Farmington Hills, MI 48335** **Email: mervteague@carriergable.com**	VENDOR NUMBER/MAIL CODE BUYER/CA (517) 373-0301 **Donald H. Mandernach**
Contract Compliance Inspector: Tim Croze (517) 322-3394 **Replacement Parts – Perforated Steel Square Tube Breakaway Systems for Highway Signs – Michigan Department of Transportation**	
CONTRACT PERIOD: From: **October 4, 2006** To: **September 30, 2011**	
TERMS **Net 30 Days**	SHIPMENT **3 Weeks ARO**
F.O.B. **Delivered**	SHIPPED FROM **N/A**
MINIMUM DELIVERY REQUIREMENTS **N/A**	

NATURE OF CHANGE (S):

Effective July 22, 2010 this Contract is hereby EXTENDED one (1) year to September 30, 2011.

All other terms and conditions, specifications, and pricing remain unchanged.

AUTHORITY/REASON:

Per agency PRF dated 7/16/10 and vendor agreement by letter dated July 22, 2010.

TOTAL CURRENT AUTHORIZED SPEND LIMIT REMAINS: $483,840.00

Form No. DMB 234 (Rev. 1/96)
AUTHORITY: Act 431 of 1984
COMPLETION: Required
PENALTY: Contract will not be executed unless form is filed

STATE OF MICHIGAN
DEPARTMENT OF MANAGEMENT AND BUDGET
PURCHASING OPERATIONS
P.O. BOX 30026, LANSING, MI 48909
OR
530 W. ALLEGAN, LANSING, MI 48933

July 23, 2009

CHANGE NOTICE NO. 5
TO
CONTRACT NO. 071B7200013
between
THE STATE OF MICHIGAN
and

NAME & ADDRESS OF VENDOR	TELEPHONE: Mervin Teague **(248) 477-8700**
Carrier & Gable, Inc. **24110 Research Drive** **Farmington Hills, MI 48335** **Email: mervteague@carriergable.com**	VENDOR NUMBER/MAIL CODE BUYER/CA (517) 373-0301 **Sue Cieciwa**
Contract Compliance Inspector: Tim Croze (517) 322-3394 **Replacement Parts – Perforated Steel Square Tube Breakaway Systems for Highway Signs – Michigan Department of Transportation**	
CONTRACT PERIOD: From: **October 4, 2006** To: **September 30, 2009**	
TERMS **Net 30 Days**	SHIPMENT **3 Weeks ARO**
F.O.B. **Delivered**	SHIPPED FROM **N/A**
MINIMUM DELIVERY REQUIREMENTS **N/A**	

NATURE OF CHANGE (S):

Effective immediately, the Contract end date is EXTENDED one (1) year to September 30, 2010.

Effective immediately, this Contract is herby INCREASED by $150,000.00.

All other terms and conditions, specifications, and pricing remain unchanged.

AUTHORITY/REASON:

Per agency request and vendor agreement by letter dated June 9, 2009.

INCREASE: $150,000.00

TOTAL REVISED ESTIMATED CONTRACT VALUE: $483,840.00

Form No. DMB 234 (Rev. 1/96)
AUTHORITY: Act 431 of 1984
COMPLETION: Required
PENALTY: Contract will not be executed unless form is filed

STATE OF MICHIGAN
DEPARTMENT OF MANAGEMENT AND BUDGET
PURCHASING OPERATIONS
P.O. BOX 30026, LANSING, MI 48909
OR
530 W. ALLEGAN, LANSING, MI 48933

May 29, 2009

CHANGE NOTICE NO. 4
TO
CONTRACT NO. 071B7200013
between
THE STATE OF MICHIGAN
and

NAME & ADDRESS OF VENDOR	TELEPHONE: Mervin Teague **(248) 477-8700**
Carrier & Gable, Inc. **24110 Research Drive** **Farmington Hills, MI 48335** mervteague@carriergable.com	VENDOR NUMBER/MAIL CODE
	BUYER/CA (517) 373-0301 **Sue Cieciwa**
Contract Compliance Inspector: Tim Croze (517) 322-3394 **Replacement Parts – Perforated Steel Square Tube Breakaway Systems for Highway Signs – Michigan Department of Transportation**	
CONTRACT PERIOD: From: **October 4, 2006** To: **September 30, 2009**	
TERMS **Net 30 Days**	SHIPMENT **3 Weeks ARO**
F.O.B. **Delivered**	SHIPPED FROM **N/A**
MINIMUM DELIVERY REQUIREMENTS **N/A**	

NATURE OF CHANGE (S):

Effective immediately, the detailed product descriptions of Contract Item Nos. 1 through 7 are hereby revised as follows. Please also refer to attached item drawing.

Item No.	NIGP Code	Detailed Product Description	Price/Each
001	801-30-49	**POSTS, SIGN, BREAKAWAY, UPRIGHT** INSERT ANCHOR N-04, 3"X3"X36" 7 GA. INTO CONCRETE BASE WITH TWO HOLES OR MAXIMUM 3" ABOVE GRADE WITH TRAFFIC FLOW TEMPLATE FOR PROPER SETTING IN CONCRETE. **This is the anchor that is inserted into concrete.**	$65.00
002	801-30-49	**POSTS, SIGN, BREAKAWAY, UPRIGHT** ASSEMBLED N-01, SLIPBASE & N-02, STUB INSERT BREAKAWAY SYSTEM TO THE ANCHOR HAVING THE BOLTS ALIGN WITH TRAFFIC FLOW. **This is the square slipbase stub and slipbase casting pre-assembled with bolts (Item #5) and keeper plate (Item #7). Assembly includes 3 bolts, nuts and washers (Item #5) and 1 keeper plate (Item #7).**	$142.00
003	801-30-49	**POSTS, SIGN, BREAKAWAY, UPRIGHT** SLIDE UPRIGHT POST 2.5"X16' 10 GA. N-03 INTO THE 8" SLIPBASE N-1 BREAKAWAY ASSEMBLY AND FASTEN WITH 5/16" CORNER BOLTS N-5. **This the 16' post that attaches to the slipbase assembly (item #3).**	$107.00

004	320-20	**BOLTS, STEEL** N-05 THE 5/16" -18 GRADE 5, 3" CORNER BOLT WITH THE N-05a 5/16" -18 GRADE STEEL FLANGE NUT. **These bolts connect Item #2 to Item #3.**	$1.35
005	320-20	**BOLTS, STEEL** N-06 THE 1/2" -13X13" GREDE 5 ZINC PLATED FLANGE BOLT N-06a THE 1/2" – 13 FLAT NUT N-06b THE 1/2" FLAT WASHER, 3/16" I.D., 1-3/8 O.D. **Used in slipbase assembly (Item #2). Do not need to order if purchasing Item #2.**	$2.10
006	320-20	**BOLTS, STEEL** N-07 THE 1/2" -13X4" HOT DIPPED GALVANIZED GRADE8 HEX HEAD BOLTS WITH 1" OF THREAD. N-07a THE 1/2" -13 HOT DIPPED GALVANIZED GRADE 8 NUT N-07b THE HOT DIPPED GALVANIZED FLAT WASHER 1" O.D. N-07c THE 1/2" HOT DIPPED GALVANIZED LOCK WASHER 13/16" O.D. **These bolts connect Item #1 to Item #2.**	$3.50
007	320-20	**BOLTS, STEEL** N-08 SLIPBASE BOLT KEEPER PLATE (8" Sq. SYS.) **This is the keeper plate in the slipbase assembly. Do not need to order if purchasing item #2.**	$2.40

All other terms and conditions, specifications, and pricing remain unchanged.

A revised item listing/pricing page is attached.

AUTHORITY/REASON:

Per agency request by email dated May 27, 2009.

TOTAL ESTIMATED CONTRACT VALUE REMAINS: $333,840.00

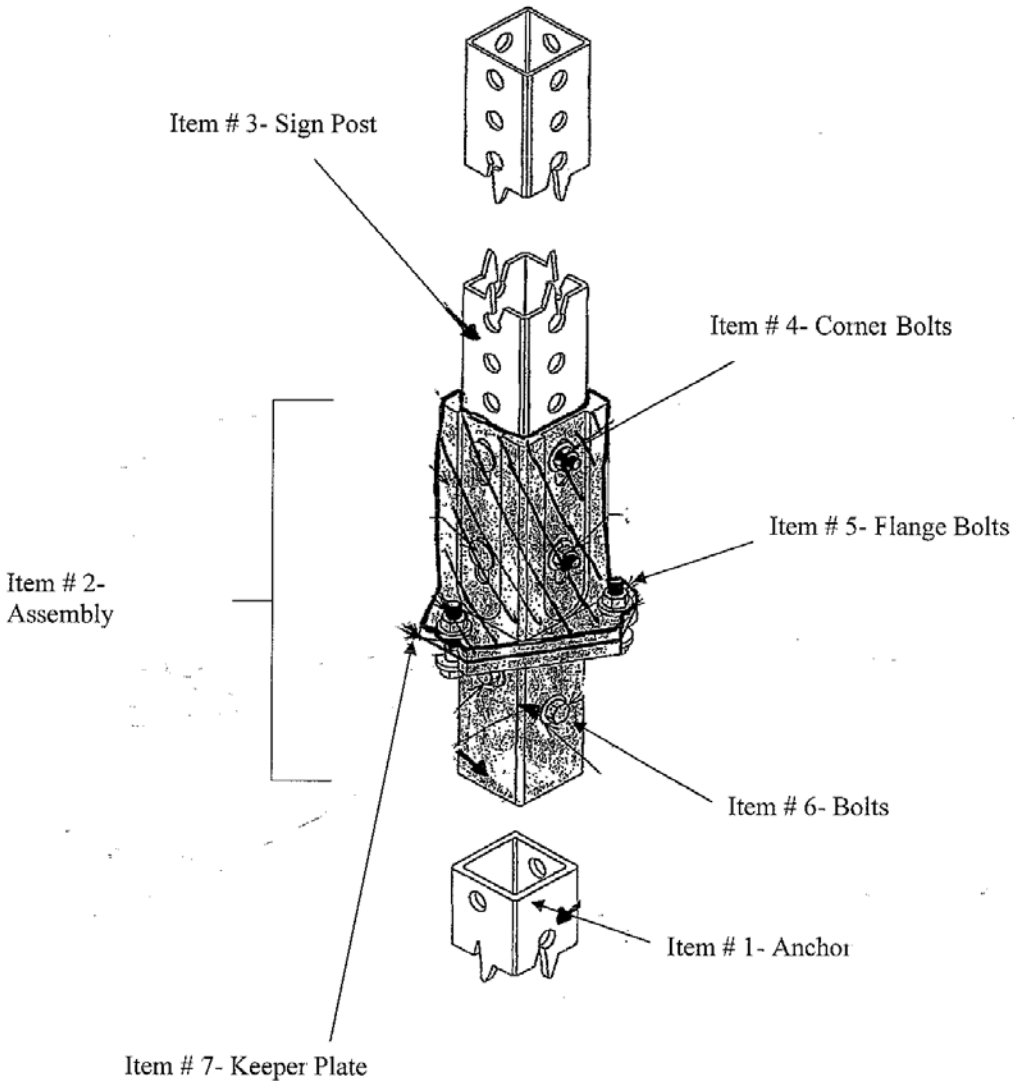
Item # 3- Sign Post
Item # 4- Corner Bolts
Item # 5- Flange Bolts
Item # 2-
Assembly
Item # 6- Bolts
Item # 1- Anchor
Item # 7- Keeper Plate

ITEM LISTING/PRICING PAGE

Item No.	Unit	NIGP Code	Description	Unit Price
001	Each	801-30-49	**POSTS, SIGN, BREAKAWAY, UPRIGHT** INSERT ANCHOR N-04, 3”X3”X36” 7 GA. INTO CONCRETE BASE WITH TWO HOLES OR MAXIMUM 3” ABOVE GRADE WITH TRAFFIC FLOW TEMPLATE FOR PROPER SETTING IN CONCRETE. **This is the anchor that is inserted into concrete.** IN COMPLIANCE WITH MDOT STANDARD PLAN SIGN-207-A ATTACHED. MICHIGAN PART NUMBER: N-04 Name of Manufacturer: NorthWest Pipe Company Location (City/State): Houston, TX Name of Distributor: Carrier & Gable, Inc. Location (City/State): Farmington Hills, MI	$65.00
002	Each	801-30-49	**POSTS, SIGN, BREAKAWAY, UPRIGHT** ASSEMBLED N-01, SLIPBASE & N-02, STUB INSERT BREAKAWAY SYSTEM TO THE ANCHOR HAVING THE BOLTS ALIGN WITH TRAFFIC FLOW. **This is the square slipbase stub and slipbase casting pre-assembled with bolts (Item #5) and keeper plate (Item #7). Assembly includes 3 bolts, nuts and washers (Item #5) and 1 keeper plate (Item #7).** IN COMPLIANCE WITH MDOT STANDARD PLAN SIGN-207-A ATTACHED. MICHIGAN PART NUMBER: N-01 and N-02 Name of Manufacturer: NorthWest Pipe Company Location (City/State): Houston, TX Name of Distributor: Carrier & Gable, Inc. Location (City/State): Farmington Hills, MI	$142.00
003	Each	801-30-49	**POSTS, SIGN, BREAKAWAY, UPRIGHT** POSTS, SIGN, BREAKAWAY, UPRIGHT SLIDE UPRIGHT POST 2.5”X16’ 10 GA. N-03 INTO THE 8” SLIPBASE N-1 BREAKAWAY ASSEMBLY AND FASTEN WITH 5/16” CORNER BOLTS N-5. **This the 16’ post that attaches to the slipbase assembly (item #3).** IN COMPLIANCE WITH MDOT STANDARD PLAN SIGN-207-A ATTACHED. MICHIGAN PART NUMBER: N-03 Name of Manufacturer: Ulti-Mate Hwy. Products Location (City/State): Houston, TX Name of Distributor: NorthWest Pipe Company Location (City/State): Farmington Hills, MI	$107.00

ITEM LISTING/PRICING PAGE (Continued)

Item No.	Unit	NIGP Code	**Description**	Unit Price
004	Each	320-20	**BOLTS, STEEL** N-05 THE 5/16”-18 GRADE 5, 3” CORNER BOLT WITH THE N-05a 5/16”-18 GRADE STEEL FLANGE NUT. **These bolts connect Item #2 to Item #3.** IN COMPLIANCE WITH MDOT STANDARD PLAN VIII-207A ATTACHED. MICHIGAN PART NUMBER: N-05 and N-05a Name of Manufacturer: NorthWest Pipe Company Location (City/State): Houston, TX Name of Distributor: Carrier & Gable, Inc. Location (City/State): Farmington Hills, MI	$1.35
005	Each	320-20	**BOLTS, STEEL** N-06 THE 1/2” -13X13” GREDE 5 ZINC PLATED FLANGE BOLT N-06a THE 1/2" – 13 FLAT NUT N-06b THE 1/2" FLAT WASHER, 3/16” I.D., 1-3/8 O.D. **Used in slipbase assembly (Item #2). Do not need to order if purchasing Item #2.** IN COMPLIANCE WITH MDOT STANDARD PLAN VIII-207A ATTACHED. MICHIGAN PART NUMBER: N-06, N-06a & N-06b Name of Manufacturer: NorthWest Pipe Company Location (City/State): Houston, TX Name of Distributor: Carrier & Gable, Inc. Location (City/State): Farmington Hills, MI	$2.10
006	Each	320-20	**BOLTS, STEEL** N-07 THE 1/2” -13X4” HOT DIPPED GALVANIZED GRADE8 HEX HEAD BOLTS WITH 1” OF THREAD. N-07a THE 1/2" -13 HOT DIPPED GALVANIZED GRADE 8 NUT N-07b THE HOT DIPPED GALVANIZED FLAT WASHER 1” O.D. N-07c THE 1/2" HOT DIPPED GALVANIZED LOCK WASHER 13/16” O.D. **These bolts connect Item #1 to Item #2.** IN COMPLIANCE WITH MDOT STANDARD PLAN VIII-207A ATTACHED. MICHIGAN PART NUMBER: N-07, N-07a, N-07b, AND N-07c Name of Manufacturer: NorthWest Pipe Company Location (City/State): Houston, TX Name of Distributor: Carrier & Gable, Inc. Location (City/State): Farmington Hills, MI	$3.50

ITEM LISTING/PRICING PAGE (Continued)

Item No.	Unit	NIGP Code	Description	Unit Price
007	Each	320-20	**BOLTS, STEEL** N-08 SLIPBASE BOLT KEEPER PLATE (8" Sq. SYS.) **This is the keeper plate in the slipbase assembly. Do not need to order if purchasing item #2.** IN COMPLIANCE WITH MDOT STANDARD PLAN VIII-207A ATTACHED. MICHIGAN PART NUMBER: N-08 Name of Manufacturer: NorthWest Pipe Company Location (City/State): Houston, TX Name of Distributor: Carrier & Gable, Inc. Location (City/State): Farmington Hills, MI	$2.40

The terms and conditions require **no minimum order**.

Persons responsible for administering this Contract.

NAME: Merv Teague

TITLE: Sales Representative

PHONE: (248) 477-8700

FAX: (248) 473-0730

E-MAIL: mervteague@carriergable.com

Name: Joe Rodes

TITLE: Operations Manager

PHONE: (248) 477-8700

FAX: (248) 473-0730

E-MAIL: joerodes@carriergable.com

Form No. DMB 234 (Rev. 1/96)
AUTHORITY: Act 431 of 1984
COMPLETION: Required
PENALTY: Contract will not be executed unless form is filed

STATE OF MICHIGAN
DEPARTMENT OF MANAGEMENT AND BUDGET
PURCHASING OPERATIONS
P.O. BOX 30026, LANSING, MI 48909
OR
530 W. ALLEGAN, LANSING, MI 48933

March 18, 2009

CHANGE NOTICE NO. 3
TO
CONTRACT NO. 071B7200013
between
THE STATE OF MICHIGAN
and

NAME & ADDRESS OF VENDOR	TELEPHONE: Mervin Teague **(248) 477-8700**
Carrier & Gable, Inc. **24110 Research Drive** **Farmington Hills, MI 48335** mervteague@carriergable.com	VENDOR NUMBER/MAIL CODE
	BUYER/CA (517) 373-0301 **Sue Cieciwa**
Contract Compliance Inspector: Tim Croze (517) 322-3394 **Replacement Parts – Perforated Steel Square Tube Breakaway Systems for Highway Signs – Michigan Department of Transportation**	
CONTRACT PERIOD: From: **October 4, 2006** To: **September 30, 2009**	
TERMS **Net 30 Days**	SHIPMENT **3 Weeks ARO**
F.O.B. **Delivered**	SHIPPED FROM **N/A**
MINIMUM DELIVERY REQUIREMENTS **N/A**	

NATURE OF CHANGE (S):

Effective immediately, the MDOT specifications are hereby CHANGED from:

-MDOT Standard Plan Punched Square Tube Sign Breakaway System VII-205E dated 10/17/05
-MDOT Special Provision for Punched Square Tube Sign Breakaway System

to:
-MDOT Standard Plan Perforated Steel Square Tube Sign Breakaway System SIGN-207-A dated 10/17/05 (attached).

In addition, the manufacturer is changed from Ulti-Mate Hwy. Products, Stanton, CA to Northwest Pipe Company, Houston, TX.

Contract Item Nos. 1 through 9 are hereby replaced with the following 7 items:

Item No.	NIGP Code	Detailed Product Description	Price/Each
001	801-30-49	**POSTS, SIGN, BREAKAWAY, UPRIGHT** INSERT ANCHOR N-04, 3"X3"X36" 7 GA. INTO CONCRETE BASE WITH TWO HOLES OR MAXIMUM 3" ABOVE GRADE WITH TRAFFIC FLOW TEMPLATE FOR PROPER SETTING IN CONCRETE.	$65.00
002	801-30-49	**POSTS, SIGN, BREAKAWAY, UPRIGHT** ATTACH ASSEMBLED N-01, SLIPBASE & N-02, STUB INSERT BREAKAWAY SYSTEM TO THE ANCHOR HAVING THE BOLTS ALIGN WITH TRAFFIC FLOW.	$142.00
003	801-30-49	**POSTS, SIGN, BREAKAWAY, UPRIGHT** SLIDE UPRIGHT POST 2.5"X16' 10 GA. N-03 INTO THE 8" SLIPBASE N-1 BREAKAWAY ASSEMBLY AND FASTEN WITH 5/16" CORNER BOLTS N-5.	$107.00
004	320-20	**BOLTS, STEEL** N-05 THE 5/16" -18 GRADE 5, 3" CORNER BOLT WITH THE N-05a 5/16" -18 GRADE STEEL FLANGE NUT.	$1.35
005	320-20	**BOLTS, STEEL** N-06 THE 1/2" -13X13" GREDE 5 ZINC PLATED FLANGE BOLT N-06a THE 1/2" – 13 FLAT NUT N-06b THE 1/2" FLAT WASHER, 3/16" I.D., 1-3/8 O.D.	$2.10
006	320-20	**BOLTS, STEEL** N-07 THE 1/2" -13X4" HOT DIPPED GALVANIZED GRADE8 HEX HEAD BOLTS WITH 1" OF THREAD. N-07a THE 1/2" -13 HOT DIPPED GALVANIZED GRADE 8 NUT N-07b THE HOT DIPPED GALVANIZED FLAT WASHER 1" O.D. N-07c THE 1/2" HOT DIPPED GALVANIZED LOCK WASHER 13/16" O.D.	$3.50
007	320-20	**BOLTS, STEEL** N-08 SLIPBASE BOLT KEEPER PLATE (8" Sq. SYS.)	$2.40

In addition, this Contract is hereby INCREASED by $24,000.00.

All other terms and conditions, specifications, and pricing remain unchanged.

A revised item listing/pricing page is attached.

AUTHORITY/REASON:

Per vendor request by email dated March 6, 2009, agency acceptance, and DMB, Purchasing Operations approval.

TOTAL REVISED ESTIMATED CONTRACT VALUE: $333,840.00

ITEM LISTING/PRICING PAGE

Item No.	Unit	NIGP Code	Description	Unit Price
001	Each	801-30-49	**POSTS, SIGN, BREAKAWAY, UPRIGHT** INSERT ANCHOR N-04, 3”X3”X36” 7 GA. INTO CONCRETE BASE WITH TWO HOLES OR MAXIMUM 3” ABOVE GRADE WITH TRAFFIC FLOW TEMPLATE FOR PROPER SETTING IN CONCRETE. IN COMPLIANCE WITH MDOT STANDARD PLAN SIGN-207-A ATTACHED. MICHIGAN PART NUMBER: N-04 Name of Manufacturer: NorthWest Pipe Company Location (City/State): Houston, TX Name of Distributor: Carrier & Gable, Inc. Location (City/State): Farmington Hills, MI	$65.00
002	Each	801-30-49	**POSTS, SIGN, BREAKAWAY, UPRIGHT** ATTACH ASSEMBLED N-01, SLIPBASE & N-02, STUB INSERT BREAKAWAY SYSTEM TO THE ANCHOR HAVING THE BOLTS ALIGN WITH TRAFFIC FLOW. IN COMPLIANCE WITH MDOT STANDARD PLAN SIGN-207-A ATTACHED. MICHIGAN PART NUMBER: N-01 and N-02 Name of Manufacturer: NorthWest Pipe Company Location (City/State): Houston, TX Name of Distributor: Carrier & Gable, Inc. Location (City/State): Farmington Hills, MI	$142.00
003	Each	801-30-49	**POSTS, SIGN, BREAKAWAY, UPRIGHT** POSTS, SIGN, BREAKAWAY, UPRIGHT SLIDE UPRIGHT POST 2.5”X16’ 10 GA. N-03 INTO THE 8” SLIPBASE N-1 BREAKAWAY ASSEMBLY AND FASTEN WITH 5/16” CORNER BOLTS N-5. IN COMPLIANCE WITH MDOT STANDARD PLAN SIGN-207-A ATTACHED. MICHIGAN PART NUMBER: N-03 Name of Manufacturer: Ulti-Mate Hwy. Products Location (City/State): Houston, TX Name of Distributor: NorthWest Pipe Company Location (City/State): Farmington Hills, MI	$107.00

ITEM LISTING/PRICING PAGE (Continued)

Item No.	Unit	NIGP Code	**Description**	Unit Price
004	Each	320-20	**BOLTS, STEEL** N-05 THE 5/16”-18 GRADE 5, 3” CORNER BOLT WITH THE N-05a 5/16”-18 GRADE STEEL FLANGE NUT. IN COMPLIANCE WITH MDOT STANDARD PLAN VIII-207A ATTACHED. MICHIGAN PART NUMBER: N-05 and N-05a Name of Manufacturer: NorthWest Pipe Company Location (City/State): Houston, TX Name of Distributor: Carrier & Gable, Inc. Location (City/State): Farmington Hills, MI	$1.35
005	Each	320-20	**BOLTS, STEEL** N-06 THE 1/2” -13X13” GREDE 5 ZINC PLATED FLANGE BOLT N-06a THE 1/2" – 13 FLAT NUT N-06b THE 1/2" FLAT WASHER, 3/16” I.D., 1-3/8 O.D. IN COMPLIANCE WITH MDOT STANDARD PLAN VIII-207A ATTACHED. MICHIGAN PART NUMBER: N-06, N-06a & N-06b Name of Manufacturer: NorthWest Pipe Company Location (City/State): Houston, TX Name of Distributor: Carrier & Gable, Inc. Location (City/State): Farmington Hills, MI	$2.10
006	Each	320-20	**BOLTS, STEEL** N-07 THE 1/2” -13X4” HOT DIPPED GALVANIZED GRADE8 HEX HEAD BOLTS WITH 1” OF THREAD. N-07a THE 1/2" -13 HOT DIPPED GALVANIZED GRADE 8 NUT N-07b THE HOT DIPPED GALVANIZED FLAT WASHER 1” O.D. N-07c THE 1/2" HOT DIPPED GALVANIZED LOCK WASHER 13/16” O.D. IN COMPLIANCE WITH MDOT STANDARD PLAN VIII-207A ATTACHED. MICHIGAN PART NUMBER: N-07, N-07a, N-07b, AND N-07c Name of Manufacturer: NorthWest Pipe Company Location (City/State): Houston, TX Name of Distributor: Carrier & Gable, Inc. Location (City/State): Farmington Hills, MI	$3.50

ITEM LISTING/PRICING PAGE (Continued)

Item No.	Unit	NIGP Code	Description	Unit Price
007	Each	320-20	**BOLTS, STEEL** N-08 SLIPBASE BOLT KEEPER PLATE (8" Sq. SYS.) IN COMPLIANCE WITH MDOT STANDARD PLAN VIII-207A ATTACHED. MICHIGAN PART NUMBER: N-08 Name of Manufacturer: NorthWest Pipe Company Location (City/State): Houston, TX Name of Distributor: Carrier & Gable, Inc. Location (City/State): Farmington Hills, MI	$2.40

The terms and conditions require **no minimum order**.

Persons responsible for administering this Contract.

NAME: Merv Teague

TITLE: Sales Representative

PHONE: (248) 477-8700

FAX: (248) 473-0730

E-MAIL: mervteague@carriergable.com

Name: Joe Rodes

TITLE: Operations Manager

PHONE: (248) 477-8700

FAX: (248) 473-0730

E-MAIL: joerodes@carriergable.com

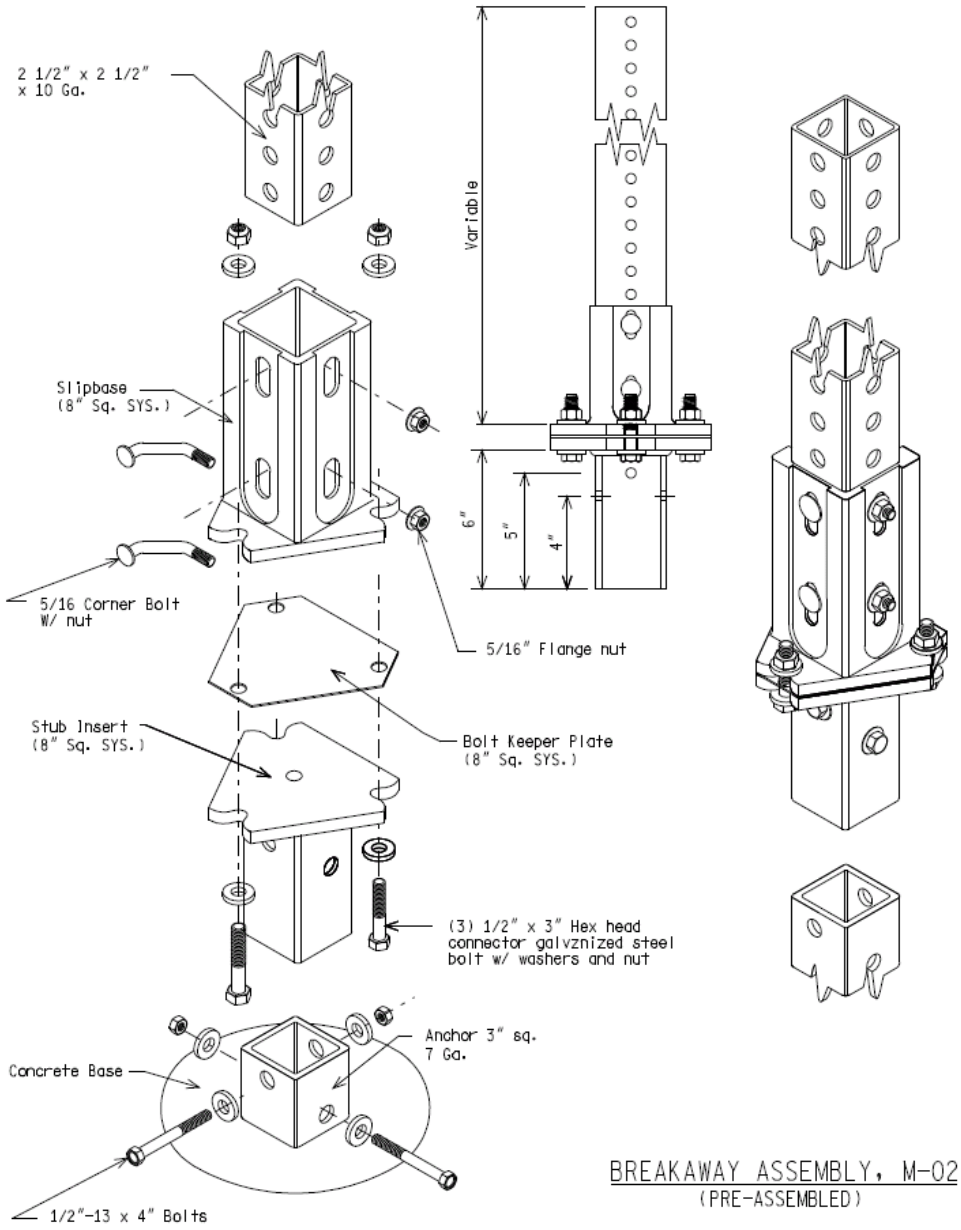

BREAKAWAY ASSEMBLY, M-02
(PRE-ASSEMBLED)

NOT TO SCALE

File: PW:RD/TS/TYP/SIGNS/SSSD/MDOT SIGN-207-A.DGN Rev. 01/20/2009 jt

MDOT Michigan Department of Transportation

PREPARED BY
TRAFFIC AND SAFETY

DRAWN BY: jt
CHECKED BY: AU

ENGINEER OF DELIVERY

ENGINEER OF DEVELOPMENT

(SPECIAL DETAIL)
FHWA APPROVAL DATE

BUREAU OF HIGHWAYS DELIVERY STANDARD PLAN FOR

PERFORATED STEEL SQUARE TUBE SIGN BREAKAWAY SYS

10-17-05
PLAN DATE

SIGN-207-A

SHEET
1 of 14

NOTE: THE ORIGINAL SIGNED COPY IS KEPT ON FILE AT THE MICHIGAN DEPARTMENT OF TRANSPORTATION.

MDOT PART NUMBER	LIST OF MATERIALS
M-01	Slipbase (8" Sq. SYS.) - Northwest Pipe part #31209
M-02	Stub Insert (8" Sq. SYS.)
M-03	Post, Inner 2 1/2" sq. x variable length 10 ga.
M-04	Insert Anchor 3" sq. x 36" 7 ga.
M-05	5/16"- 18 Grade 5, 3" corner bolt
M-05a	5/16"- 18 Steel flange nuts
M-06	1/2"- 13 x 3" Grade 5 zinc plated flange bolts
M-06a	1/2"- 13 Flange nuts
M-06b	1/2" Flat washers, 3/16" thick, 9/16 I.D., 1-3/8 O.D.
M-07	1/2"- 13 x 4" Hot dipped galvanized Grade 8 hex head bolts with 1" of thread
M-07a	1/2"- 13 Hot dipped galvanized Grade 8 nut
M-07b	1/2" Hot dipped galvanized flat washers 1" O.D.
M-07c	1/2" Hot dipped galvanized lock washers 13/16" O.D.
M-08	Slipbase Bolt Keeper Plate (8" Sq. SYS.)

NOTES:

1. Refer to the wind-load charts (sheet 11 of 14) for appropriate sign post installation.
2. The anchor M-04 is for concrete installation.
3. Quantity of materials used for the single post installation will be increased according to the number of posts required for proper sign placement.

NOT TO SCALE

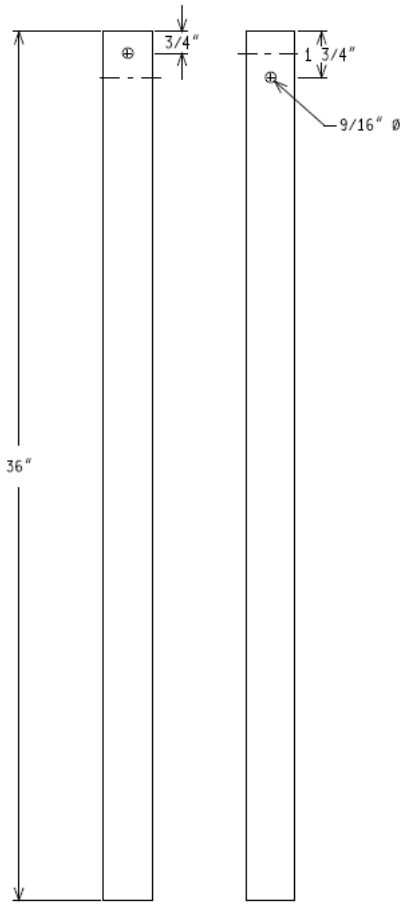

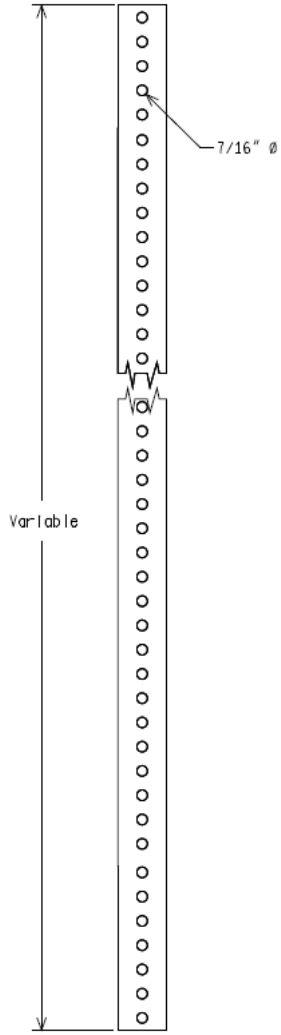

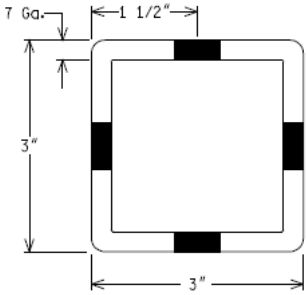

INSERT ANCHOR, M-04

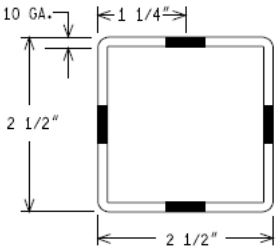

PERFORATED SQUARE STEEL POST, M-03

NOT TO SCALE

MICHIGAN DEPARTMENT OF TRANSPORTATION BUREAU OF HIGHWAYS DELIVERY STANDARD PLAN	(SPECIAL DETAIL) FHWA APPROVAL DATE	10-17-05 PLAN DATE	SIGN-207-A	SHEET 3 of 14
File: PW:RD/TS/TYP/SIGNS/SSSD/MDOT SIGN-207-A.DGN Rev. 01/20/2009 jt				

NOTE: THE ORIGINAL SIGNED COPY IS KEPT ON FILE AT THE MICHIGAN DEPARTMENT OF TRANSPORTATION.

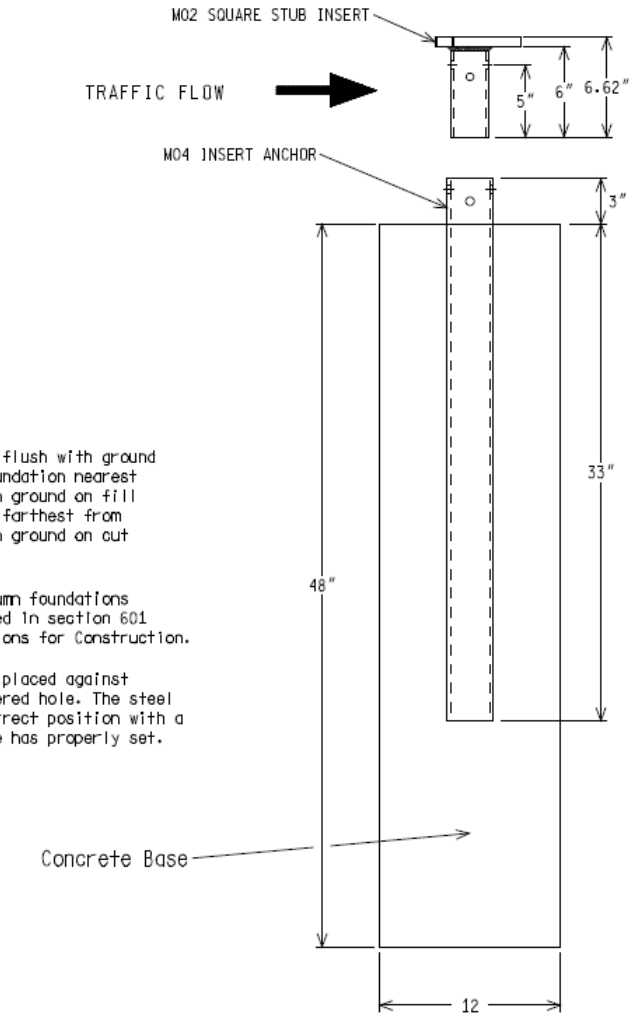

Elevation View

NOTES:

1. Top of foundation shall be flush with ground on flat slopes. edge of foundation nearest roadway shall be flush with ground on fill slopes. edge of foundation farthest from roadway shall be flush with ground on cut slopes.

2. Concrete for breakaway column foundations must be grade M as specified in section 601 of the Standard Specifications for Construction.

3. Concrete shall be used and placed against undisturbed soil in an augered hole. The steel anchor shall be held in correct position with a template until the concrete has properly set.

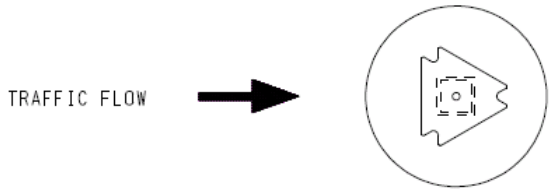

Top View

CONCRETE BASE

.12 Cu. Yds.

NOT TO SCALE

MICHIGAN DEPARTMENT OF TRANSPORTATION BUREAU OF HIGHWAYS DELIVERY STANDARD PLAN	(SPECIAL DETAIL) FHWA APPROVAL DATE	10-17-05 PLAN DATE	SIGN-207-A	SHEET 4 of 14
File: PW:RD/TS/TYP/SIGNS/SSSD/MDOT SIGN-207-A.DGN Rev. 01/20/2009 jt				

NOTE: THE ORIGINAL SIGNED COPY IS KEPT ON FILE AT THE MICHIGAN DEPARTMENT OF TRANSPORTATION.

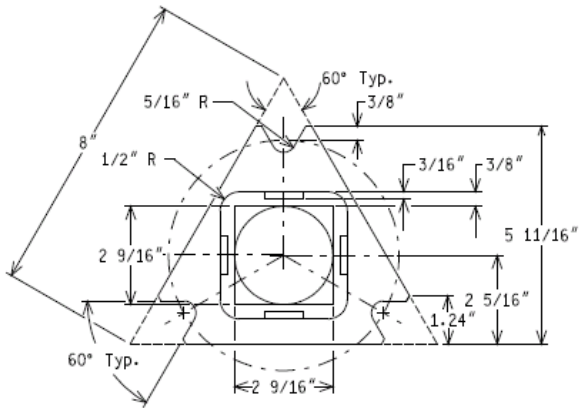

TOP VIEW

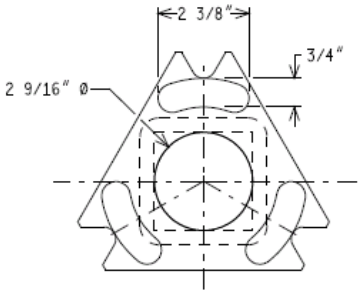

BOTTOM VIEW

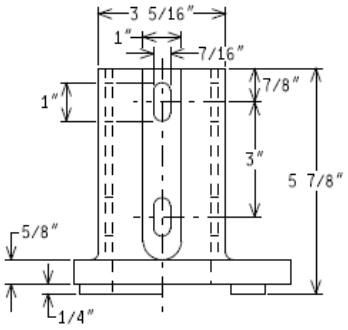

SIDE VIEW

SLIPBASE

(8" SQUARE SYSTEM)

NOTES:

1. Material: ASTM A-536 Grade 65-45-12 ductile iron.
2. Hot dip galvanize per ASTM A-153.
3. Clean bore I.D. and counterbore after galvanizing to remove excess zinc.
4. Casting part number-31209.
5. Unless noted: all radii and fillets are 1/4".
6. Square hole tapers from 2 9/16" to 2 1/2" at the bottom.

NOT TO SCALE

MICHIGAN DEPARTMENT OF TRANSPORTATION BUREAU OF HIGHWAYS DELIVERY STANDARD PLAN	(SPECIAL DETAIL) FHWA APPROVAL DATE	10-17-05 PLAN DATE	SIGN-207-A	SHEET 5 of 14
File: PW:RD/TS/TYP/SIGNS/SSSD/MDOT SIGN-207-A.DGN Rev. 01/20/2009 jt				

NOTE: THE ORIGINAL SIGNED COPY IS KEPT ON FILE AT THE MICHIGAN DEPARTMENT OF TRANSPORTATION.

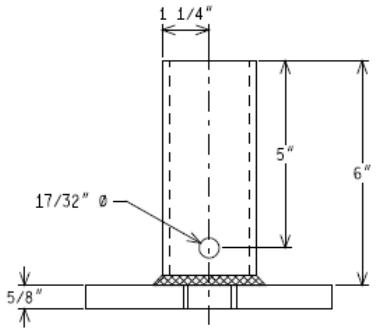

TOP VIEW

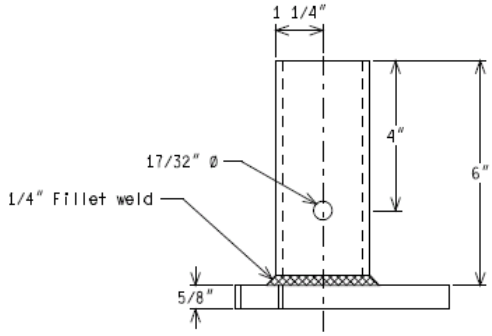

SIDE VIEW

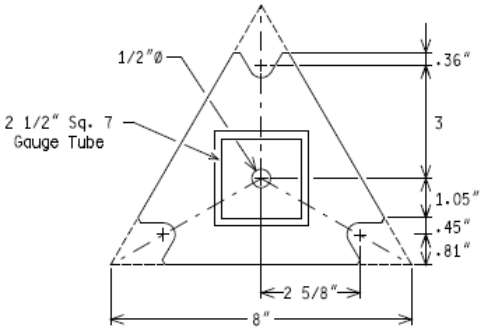

END VIEW

SLIPBASE STUB INSERT

(8" SQUARE SYSTEM)

NOTES:

1. Tube shall conform to ASTM A53 GR B or A500.
2. All fabrication shall be completed prior to galvanization according to ASTM A 123 G85 min.
3. Hole in Sliplate is to provide escape path for gasses during hot dip galvanization. Exact hole placement may vary as needed.
4. Sliplate shall be fabricated from ASTM A36 or A572 steel plate.
5. All welding to be preformed in accordance with ANSI/AWI D1.1 specifications.

NOT TO SCALE

MICHIGAN DEPARTMENT OF TRANSPORTATION BUREAU OF HIGHWAYS DELIVERY STANDARD PLAN	(SPECIAL DETAIL) FHWA APPROVAL DATE	10-17-05 PLAN DATE	SIGN-207-A	SHEET 6 of 14
File: PW:RD/TS/TYP/SIGNS/SSSD/MDOT SIGN-207-A.DGN Rev. 01/20/2009 jt				

NOTE: THE ORIGINAL SIGNED COPY IS KEPT ON FILE AT THE MICHIGAN DEPARTMENT OF TRANSPORTATION.

Stamp Bolt Keeper Plate Spacer from galvanized sheet
26-30 ga. ASTM A-563 G-90 coating

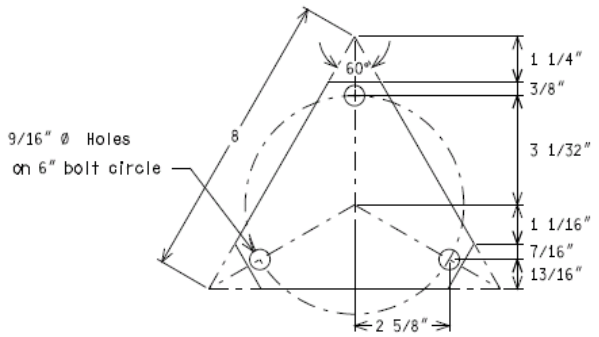

BOLT KEEPER PLATE

(8" SQUARE SYSTEM)

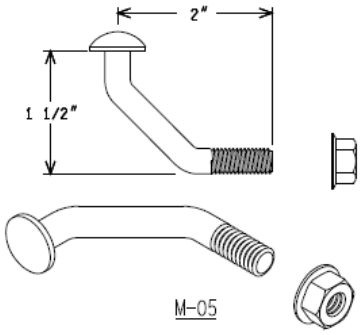

M-05

(4) 5/16" - 18 Grade 5 large corner steel bolt
(4) 5/16" - 18 Hex flange steel nut

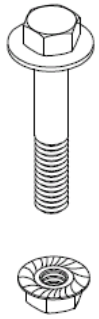

M-08

(3) 1/2" - 13 x 3" Hex flange head galvanized steel bolt
(3) 1/2" - 13 Hex flange galvanized steel nut
(6) 1/2" x 3/32" Heavy duty galvanized steel flat washer

NOT TO SCALE

MICHIGAN DEPARTMENT OF TRANSPORTATION BUREAU OF HIGHWAYS DELIVERY STANDARD PLAN	(SPECIAL DETAIL) FHWA APPROVAL DATE	10-17-05 PLAN DATE	SIGN-207-A	SHEET 7 of 14
File: PW:RD/TS/TYP/SIGNS/SSSD/MDOT SIGN-205-A.DGN Rev. 01/20/2009 jt				

NOTE: THE ORIGINAL SIGNED COPY IS KEPT ON FILE AT THE MICHIGAN DEPARTMENT OF TRANSPORTATION.

INSTALLATION CHECKLIST

1. Install the anchor assembly (M0-4) into the concrete base and align with the traffic flow (see figure .
   a) For concrete installation (required in weak soil), a 48" deep and 12" minimum diameter hole is required for concrete footings.
2. Install anchor assembly allowing only two holes above grade.(3" max.)
3. Slide 6" stub (M0-2) of breakaway assembly into anchor having the bolt location align with traffic flow (see figure 1) and fasten with two 1/2" x 4" bolts (M-07) washers (M0-7b) and nuts (M-07a).
4. If breakaway assembly is pre-assembled, proceed to step 14.
5. Place the Slipbase bolt keeper plate (M-08) on the 6" stub (M02).
6. Place the square Slipbase (M01) on top of the bolt keeper (M08) with the 3 hole side facing on coming traffic.
7. Align the Slipbase (M01), the bolt keeper (M-08) and the 6" stub insert (M02).
8. Slide each flat washer (M-06b) on each of the three inverted 1/2" x 3" steel bolts (M-06).
9. Insert above bolt (M-06) with flat washer (M-06c) up through notched hole of assembly (M-01).
10. Place the second flat washer (M-06b) down on to the above bolts (M-06).
11. Complete by fastening the nut (M-06b) to the steel bolt (M-06) and tighten snugly down against the top flat washer (M-06b).
12. Repeat step 9, 10 & 11 on the two remaining notched holes of the triangular points.
13. After fastening all hardware, torque the three 1/2" nuts (M-06b) in a circular pattern to 80 ft-lbs maximum.
14. Slide appropriate upright post (M03), (refer to the allowable sign area per post/wind load charts), into the 8" Slipbase (M01) of breakaway assembly and fasten with four 5/16" corner bolts (M-05) and flange nuts (M-05a).

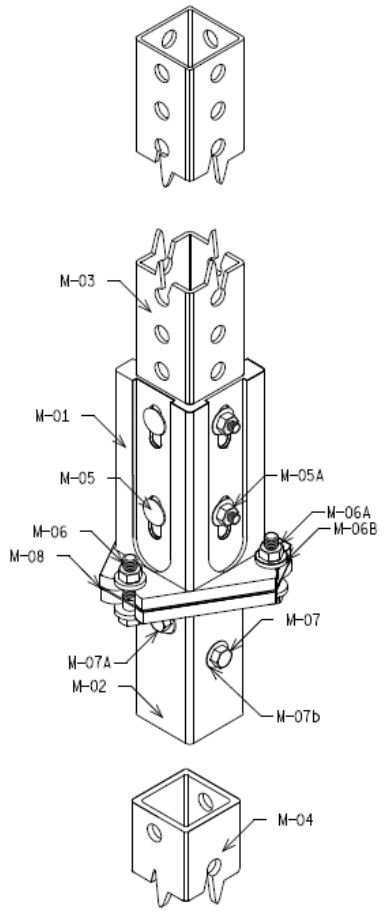

TRAFFIC FLOW

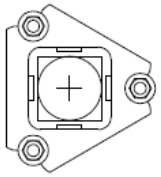

FIGURE 1

NOT TO SCALE

MICHIGAN DEPARTMENT OF TRANSPORTATION BUREAU OF HIGHWAYS DELIVERY STANDARD PLAN	(SPECIAL DETAIL) FHWA APPROVAL DATE	10-17-05 PLAN DATE	SIGN-207-A	SHEET 8 of 14
File: PW:RD/TS/TYP/SIGNS/SSSD/MDOT SIGN-205-A.DGN Rev. 01/20/2009 jt				

NOTE: THE ORIGINAL SIGNED COPY IS KEPT ON FILE AT THE MICHIGAN DEPARTMENT OF TRANSPORTATION.

INSTALLATION INSTRUCTIONS

1. Check with utility companies to mark anchor and post location
2. Drill 12" hole 48" deep install concrete foundation.
3. Orientate anchor for correct sign placement (see figure 1, sheet 7 of 14).
4. Continue to install anchor until two holes are remaining above surface level.
5. Check anchor for plumb and square.
6. Install sign on post using MDOT approved hardware for Type II signs and aluminum rivets for Type III signs.
7. Insert post with sign into Slipbase six holes deep.
8. See Sign-100-Series and Sign-120-Series for appropriate bottom height.
9. Use corner bolt to fasten anchor and post.
10. Following these procedures the post and anchor will be installed according to NCHRP 350.

NOT TO SCALE

MICHIGAN DEPARTMENT OF TRANSPORTATION BUREAU OF HIGHWAYS DELIVERY STANDARD PLAN	(SPECIAL DETAIL) FHWA APPROVAL DATE	10-17-05 PLAN DATE	SIGN-207-A	SHEET 9 of 14
File: PW:RD/TS/TYP/SIGNS/SSSD/MDOT SIGN-205-A.DGN Rev. 01/20/2009 jt				

NOTE: THE ORIGINAL SIGNED COPY IS KEPT ON FILE AT THE MICHIGAN DEPARTMENT OF TRANSPORTATION.

PERFORATED STEEL SQUARE TUBE SIGN BREAKAWAY SYSTEM SPECIFICATIONS

The breakaway system is designed to allow a traffic sign to breakaway near ground level upon impact by a vehicle. the breakaway system conforms to NCHRP 350 standards for breakaway sign supports.

BASIC COMPONENTS: Top coupling, middle bolt keeper plate, bottom coupling, and clamping bolts including nuts and flat washers.

1. Top casting consists of a 8" triangular ASTM A-536 Grade 65-45-12 ductile iron casting with a minimum yield strength of 45,000 psi.
2. Bottom coupling consists of a 2 1/2" square steel tube (3/16" wall @ 6" long) welded to a 5/8" triangular steel plate.
3. The bottom steel tubing is structural ASTM A-53 Grade B with a minimum Yield Strength of 46,000 psi.
4. The bottom 5/8" thick triangular steel plate is structural ASTM A572 Grade 50 with a minimum Yield Strength of 50,000 psi.
5. Both top and bottom couplings are hot-dip galvanized (zinc coated) finished.
6. Top and bottom triangular steel plates have a bolt circle diameter of 6".
7. Middle bolt keeper galvanized sheet, plate thickness: 26-30 gauge.
8. Clamping bolt type: Grade 5, zinc plated flanged bolt.
9. Clamping bolt size: 1/2" diameter and 3" in length.
10. Steel nuts are 1/2", zinc plated flanged nut.
11. Flat washers are 3/16" thick, 17/32"I.D, 1-1/8" O.D.
12. Clamping bolt torque: 80 lbs-ft maximum.
13. No scheduled re-torque is required.
14. Periodic inspection is recommended.

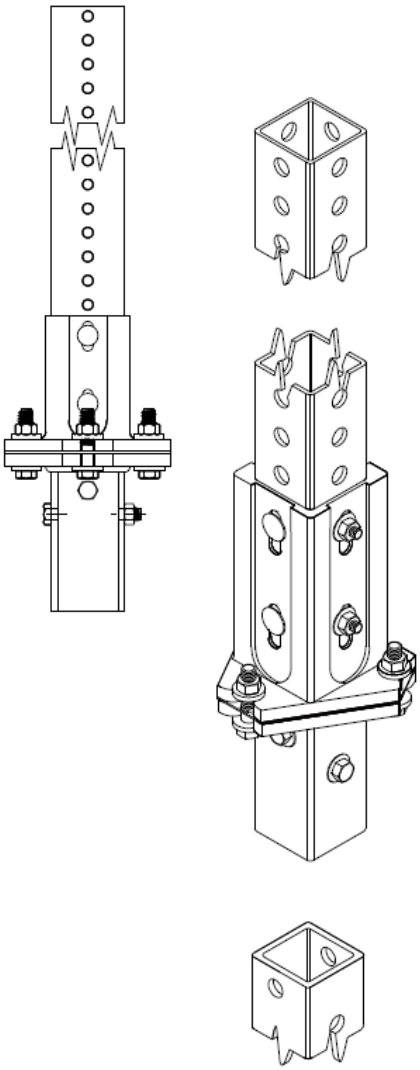

NOT TO SCALE

MICHIGAN DEPARTMENT OF TRANSPORTATION BUREAU OF HIGHWAYS DELIVERY STANDARD PLAN	(SPECIAL DETAIL) FHWA APPROVAL DATE	10-17-05 PLAN DATE	SIGN-207-A	SHEET 10 of 14
File: PW:RD/TS/TYP/SIGNS/SSSD/MDOT SIGN-205-A.DGN Rev. 01/20/2009 jt				

NOTE: THE ORIGINAL SIGNED COPY IS KEPT ON FILE AT THE MICHIGAN DEPARTMENT OF TRANSPORTATION.

PERFORATED STEEL SQUARE TUBE SIGN BREAKAWAY SYSTEM FOR 90 MPH WIND SPEED

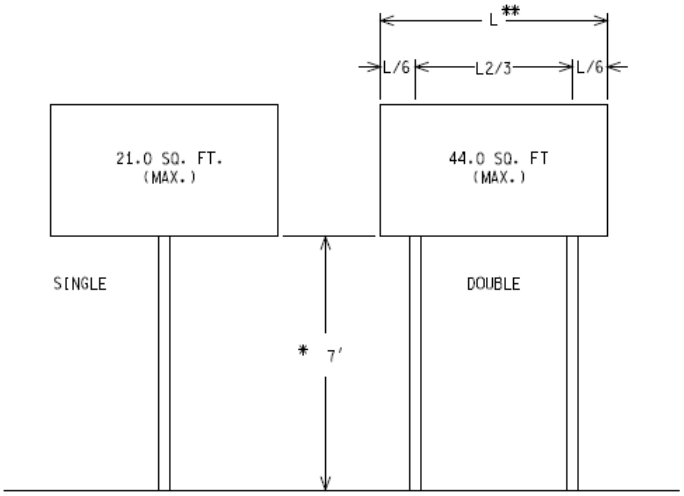

*/** The bottom height is defined as height from the near edge of the travel lane pavement to the bottom of the sign panel. See Sign-100-Series and Sign-120-Series for required minimum bottom height and support spacings.

NOTE:

For signs over 44 sft. use the charts on SIGN-150-SERIES.

NOT TO SCALE

MICHIGAN DEPARTMENT OF TRANSPORTATION BUREAU OF HIGHWAYS DELIVERY STANDARD PLAN	(SPECIAL DETAIL) FHWA APPROVAL DATE	10-17-05 PLAN DATE	SIGN-207-A	SHEET 11 of 14
File: PW:RD/TS/TYP/SIGNS/SSSD/MDOT SIGN-205-A.DGN Rev. 01/20/2009 jt				

NOTE: THE ORIGINAL SIGNED COPY IS KEPT ON FILE AT THE MICHIGAN DEPARTMENT OF TRANSPORTATION.

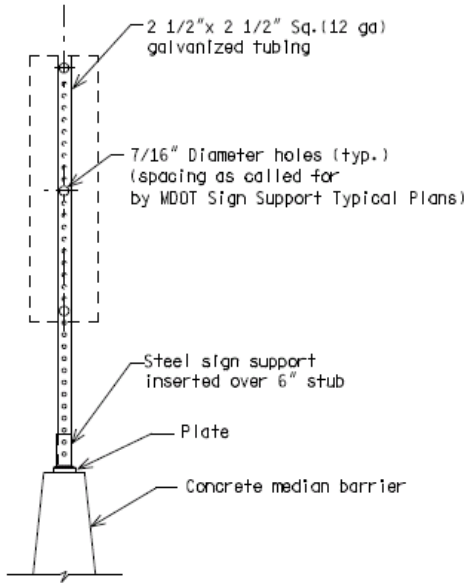

FRONT ELEVATION

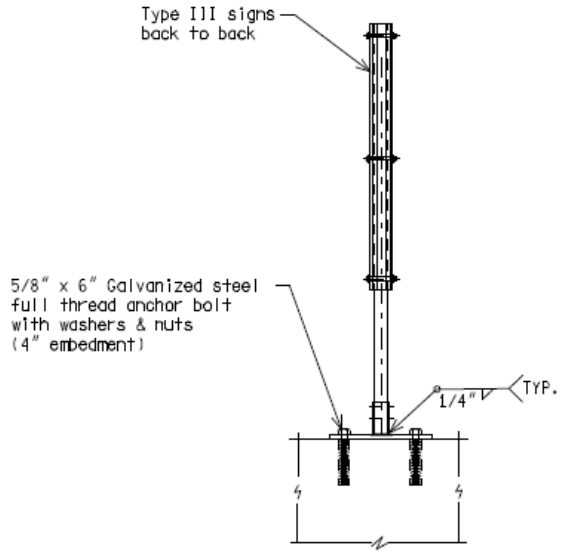

SIDE ELEVATION

CONCRETE MEDIAN BARRIER CONNECTION
(SQUARE TUBE SUPPORT)

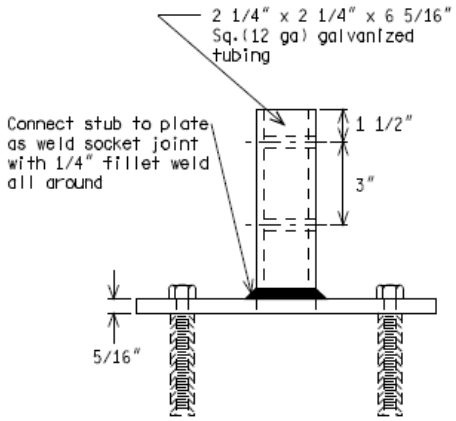

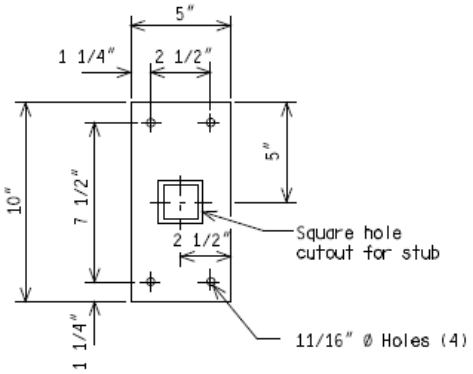

BASE PLATE DETAILS

NOT TO SCALE

MICHIGAN DEPARTMENT OF TRANSPORTATION BUREAU OF HIGHWAYS DELIVERY STANDARD PLAN	(SPECIAL DETAIL) FHWA APPROVAL DATE	10-17-05 PLAN DATE	SIGN-207-A	SHEET 12 of 14
File: PW:RD/TS/TYP/SIGNS/SSSD/MDOT SIGN-205-A.DGN Rev. 01/20/2009 jt				

NOTE: THE ORIGINAL SIGNED COPY IS KEPT ON FILE AT THE MICHIGAN DEPARTMENT OF TRANSPORTATION.

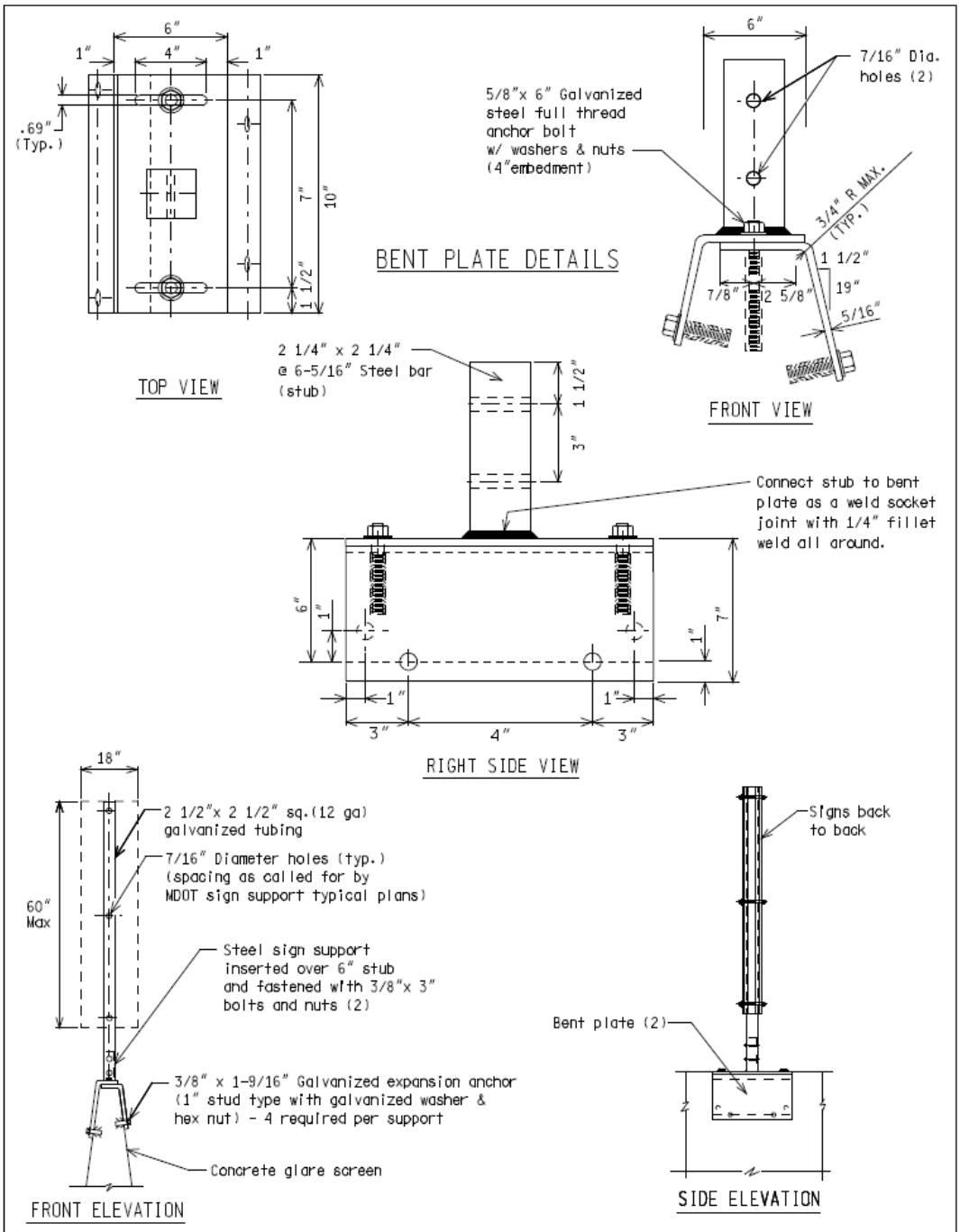

CONCRETE GLARE SCREEN CONNECTION

(SQUARE TUBE SUPPORT)

NOT TO SCALE

FOR MAINTENANCE PURPOSES ONLY

MICHIGAN DEPARTMENT OF TRANSPORTATION BUREAU OF HIGHWAYS DELIVERY STANDARD PLAN	(SPECIAL DETAIL) FHWA APPROVAL DATE	10-17-05 PLAN DATE	SIGN-207-A	SHEET 13 of 14
File: PW:RD/TS/TYP/SIGNS/SSSD/MDOT SIGN-205-A.DGN Rev. 01/20/2009 jt				

NOTE: THE ORIGINAL SIGNED COPY IS KEPT ON FILE AT THE MICHIGAN DEPARTMENT OF TRANSPORTATION.

NOTES:

1. The materials and galvanized finish for the connection components (steel pipe, channels, square tube, stub & plate) shall be per the current MDOT Standard Specifications for Construction after fabrication.

2. All fastening hardware (bolts, nuts and washers) shall be galvanized to ASTM 153, full thread anchor bolt manufactured to ASTM A36 Mod55. Hex bolt manufactured to A307.

3. The adhesive anchoring system tested to ASTM E488.

4. Pipe support suitable for a single sign connection with a maximum of 4 sq. ft. & a back to back sign connection with a maximum of 8 sq. ft.

5. Square tube support suitable for single sign connection with a maximum of 7.5 sq. ft. & a back to back sign connection with a maximum of 15 sq.ft.

6. Sign substrates shall be aluminum for ground mount and barrier connections per section 919 of the 2003 Standard Specifications for Construction.

7. Concrete median barriers having a top width of 6″ or wider shall use the concrete median barrier connection (square tube support).

8. Glare screen and barrier connections must be installed to ensure that either a pipe support or a square tube is plumb on the glare screen or concrete barrier wall.

NOT TO SCALE

MICHIGAN DEPARTMENT OF TRANSPORTATION BUREAU OF HIGHWAYS DELIVERY STANDARD PLAN	(SPECIAL DETAIL) FHWA APPROVAL DATE	10-17-05 PLAN DATE	SIGN-207-A	SHEET 14 of 14
File: PW:RD/TS/TYP/SIGNS/SSSD/MDOT SIGN-205-A.DGN Rev. 01/20/2009 jt				

NOTE: THE ORIGINAL SIGNED COPY IS KEPT ON FILE AT THE MICHIGAN DEPARTMENT OF TRANSPORTATION.

Form No. DMB 234 (Rev. 1/96)
AUTHORITY: Act 431 of 1984
COMPLETION: Required
PENALTY: Contract will not be executed unless form is filed

STATE OF MICHIGAN
DEPARTMENT OF MANAGEMENT AND BUDGET
PURCHASING OPERATIONS
P.O. BOX 30026, LANSING, MI 48909
OR
530 W. ALLEGAN, LANSING, MI 48933

September 2, 2008

CHANGE NOTICE NO. 2
TO
CONTRACT NO. 071B7200013
between
THE STATE OF MICHIGAN
and

NAME & ADDRESS OF VENDOR	TELEPHONE: Mervin Teague **(248) 477-8700**
Carrier & Gable, Inc. **24110 Research Drive** **Farmington Hills, MI 48335** mervteague@carriergable.com	VENDOR NUMBER/MAIL CODE
	BUYER/CA (517) 373-0301 **Sue Cieciwa**

Contract Compliance Inspector: Tim Croze (517) 322-3394

Replacement Parts – Punched Square Tube Breakaway Systems for Highway Signs-Michigan Department of Transportation

CONTRACT PERIOD: From: **October 4, 2006** To: **September 30, 2009**

TERMS	SHIPMENT
Net 30 Days	**3 Weeks ARO**
F.O.B.	SHIPPED FROM
Delivered	**N/A**

MINIMUM DELIVERY REQUIREMENTS
N/A

NATURE OF CHANGE (S):

PRICE INCREASES are effective September 2, 2008, for the following items.

Item No.	Detailed Product Description	Current Price/Each	Revised Price/Each Eff. 9/2/08
001	POSTS, SIGN, BREAKAWAY, UPRIGHT WINGED ANCHOR ASSEMBLY 2 1/4" X 36" - 2 1/2" X 18" FOR SOIL INSTALLATION FOR PUNCHED SQUARE TUBE BREAKAWAY SYSTEM	$46.10	$53.00
002	POSTS, SIGN, BREAKAWAY, UPRIGHT SQUARE POST BREAKAWAY ASSEMBLY 2 3/16", 10 GAUGE FOR PUNCHED SQUARE TUBE BREAKAWAY SYSTEM.	$132.35	$152.20
003	POSTS, SIGN, BREAKAWAY, UPRIGHT POST, INNER 2 3/16" X 7' 10 GAUGE FOR THE PUNCHED SQUARE TUBE BREAKAWAY SYSTEM.	$44.95	$51.70
004	POSTS, SIGN, BREAKAWAY, UPRIGHT POST, OUTER 2 1/2" X 14' 10 GAUGE FOR THE PUNCHED SQUARE TUBE BREAKAWAY SYSTEM.	$105.15	$120.90

Item No.	Detailed Product Description	Current Price/Each	Revised Price/Each Eff. 9/2/08
005	BOLTS, STEEL 3/8" - 16 X 3" GRADE 5 HEX HEAD STEEL BOLTS WITH NUTS (5 EACH) FOR THE PUNCHED SQUARE TUBE BREAKAWAY SYSTEM.	$.55	$.65
006	BOLTS, STEEL BALL BEARING PLATE ASSEMBLY FOR THE PUNCHED SQUARE TUBE BREAKAWAY SYSTEM.	$30.70	$35.30
007	BOLTS, STEEL 1/2" - 13 X 3" STAINLESS STEEL HEX HEAD BOLTS WITH NUTS AND WASHERS FOR THE PUNCHED SQUARE TUBE BREAKAWAY SYSTEM.	$9.25	$10.65

All other terms and conditions, specifications, and pricing remain unchanged.

A revised item listing/pricing page is attached.

AUTHORITY/REASON:

Per vendor request by letter dated August 25, 2008, agency acceptance, and DMB, Purchasing Operations approval.

TOTAL ESTIMATED CONTRACT VALUE REMAINS: $309,840.00

ITEM LISTING/PRICING PAGE

Item No.	Unit	NIGP Code	Description	Unit Price
001	Each	801-30-49	**POSTS, SIGN, BREAKAWAY, UPRIGHT** WINGED ANCHOR ASSEMBLY 2 1/4" X 36" - 2 1/2" X 18" FOR SOIL INSTALLATION FOR PUNCHED SQUARE TUBE BREAKAWAY SYSTEM. IN COMPLIANCE WITH MDOT STANDARD PLAN VIII-205E AND MDOT SPECIAL PROVISION FOR PUNCHED SQUARE TUBE SIGN BREAKAWAY SYSTEM ATTACHED. MICHIGAN PART NUMBER: M-01 Name of Manufacturer: Ulti-Mate Hwy. Products Location (City/State): Stanton, CA Name of Distributor: Carrier & Gable, Inc. Location (City/State): Farmington Hills, MI	$53.00
002	Each	801-30-49	**POSTS, SIGN, BREAKAWAY, UPRIGHT** SQUARE POST BREAKAWAY ASSEMBLY 2 3/16", 10 GAUGE FOR PUNCHED SQUARE TUBE BREAKAWAY SYSTEM. IN COMPLIANCE WITH MDOT STANDARD PLAN VIII-205E AND MDOT SPECIAL PROVISION FOR PUNCHED SQUARE TUBE SIGN BREAKAWAY SYSTEM ATTACHED. MICHIGAN PART NUMBER: M-02 Name of Manufacturer: Ulti-Mate Hwy. Products Location (City/State): Stanton, CA Name of Distributor: Carrier & Gable, Inc. Location (City/State): Farmington Hills, MI	$152.20
003	Each	801-30-49	**POSTS, SIGN, BREAKAWAY, UPRIGHT** POST, INNER 2 3/16" X 7' 10 GAUGE FOR THE PUNCHED SQUARE TUBE BREAKAWAY SYSTEM. IN COMPLIANCE WITH MDOT STANDARD PLAN VIII-205E AND MDOT SPECIAL PROVISION FOR PUNCHED SQUARE TUBE SIGN BREAKAWAY SYSTEM ATTACHED. MICHIGAN PART NUMBER: M-03 Name of Manufacturer: Ulti-Mate Hwy. Products Location (City/State): Stanton, CA Name of Distributor: Carrier & Gable, Inc. Location (City/State): Farmington Hills, MI	$51.70

ITEM LISTING/PRICING PAGE (Continued)

Item No.	Unit	NIGP Code	**Description**	Unit Price
004	Each	801-30-49	**POSTS, SIGN, BREAKAWAY, UPRIGHT** POST, OUTER 2 1/2" X 14' 10 GAUGE FOR THE PUNCHED SQUARE TUBE BREAKAWAY SYSTEM. IN COMPLIANCE WITH MDOT STANDARD PLAN VIII-205E AND MDOT SPECIAL PROVISION FOR PUNCHED SQUARE TUBE SIGN BREAKAWAY SYSTEM ATTACHED. MICHIGAN PART NUMBER: M-04 Name of Manufacturer: Ulti-Mate Hwy. Products Location (City/State): Stanton, CA Name of Distributor: Carrier & Gable, Inc. Location (City/State): Farmington Hills, MI	$120.90
005	Each	320-20	**BOLTS, STEEL** 3/8" - 16 X 3" GRADE 5 HEX HEAD STEEL BOLTS WITH NUTS (5 EACH) FOR THE PUNCHED SQUARE TUBE BREAKAWAY SYSTEM. IN COMPLIANCE WITH MDOT STANDARD PLAN VIII-205E AND MDOT SPECIAL PROVISION FOR PUNCHED SQUARE TUBE SIGN BREAKAWAY SYSTEM ATTACHED. MICHIGAN PART NUMBER: M-05 Name of Manufacturer: Ulti-Mate Hwy. Products Location (City/State): Stanton, CA Name of Distributor: Carrier & Gable, Inc. Location (City/State): Farmington Hills, MI	$.65
006	Each	320-20	**BOLTS, STEEL** BALL BEARING PLATE ASSEMBLY FOR THE PUNCHED SQUARE TUBE BREAKAWAY SYSTEM. IN COMPLIANCE WITH MDOT STANDARD PLAN VIII-205E AND MDOT SPECIAL PROVISION FOR PUNCHED SQUARE TUBE SIGN BREAKAWAY SYSTEM ATTACHED. MICHIGAN PART NUMBER: M-07 Name of Manufacturer: Ulti-Mate Hwy. Products Location (City/State): Stanton, CA Name of Distributor: Carrier & Gable, Inc. Location (City/State): Farmington Hills, MI	$35.30

ITEM LISTING/PRICING PAGE (Continued)

Item No.	Unit	NIGP Code	Description	Unit Price
007	Each	320-20	**BOLTS, STEEL** 1/2" - 13 X 3" STAINLESS STEEL HEX HEAD BOLTS WITH NUTS AND WASHERS FOR THE PUNCHED SQUARE TUBE BREAKAWAY SYSTEM. IN COMPLIANCE WITH MDOT STANDARD PLAN VIII-205E AND MDOT SPECIAL PROVISION FOR PUNCHED SQUARE TUBE SIGN BREAKAWAY SYSTEM ATTACHED. MICHIGAN PART NUMBER: M-08 Name of Manufacturer: Ulti-Mate Hwy. Products Location (City/State): Stanton, CA Name of Distributor: Carrier & Gable, Inc. Location (City/State): Farmington Hills, MI	$10.65
008	Each	801-30-49	**POSTS, SIGN, BREAKAWAY, UPRIGHT** POST, OUTER 2 1/2" X 16' 10 GAUGE FOR THE PUNCHED SQUARE TUBE BREAKAWAY SYSTEM. IN COMPLIANCE WITH MDOT STANDARD PLAN VIII-205E AND MDOT SPECIAL PROVISION FOR PUNCHED SQUARE TUBE SIGN BREAKAWAY SYSTEM ATTACHED. MICHIGAN PART NUMBER: M-26 Name of Manufacturer: Ulti-Mate Hwy. Products Location (City/State): Stanton, CA Name of Distributor: Carrier & Gable, Inc. Location (City/State): Farmington Hills, MI	$121.00
009	Each	801-30-49	**POSTS, SIGN, BREAKAWAY, UPRIGHT** POST, OUTER 2 1/2" X 12' 10 GAUGE FOR THE PUNCHED SQUARE TUBE BREAKAWAY SYSTEM. IN COMPLIANCE WITH MDOT STANDARD PLAN VIII-205E AND MDOT SPECIAL PROVISION FOR PUNCHED SQUARE TUBE SIGN BREAKAWAY SYSTEM ATTACHED. MICHIGAN PART NUMBER: M-27 Name of Manufacturer: Ulti-Mate Hwy. Products Location (City/State): Stanton, CA Name of Distributor: Carrier & Gable, Inc. Location (City/State): Farmington Hills, MI	$91.00

The terms and conditions require **no minimum order**.

Persons responsible for administering this Contract.

NAME: Merv Teague

TITLE: Sales Representative

PHONE: (248) 477-8700

FAX: (248) 473-0730

E-MAIL: mervteague@carriergable.com

Name: Joe Rodes

TITLE: Operations Manager

PHONE: (248) 477-8700

FAX: (248) 473-0730

E-MAIL: joerodes@carriergable.com

Form No. DMB 234 (Rev. 1/96)
AUTHORITY: Act 431 of 1984
COMPLETION: Required
PENALTY: Contract will not be executed unless form is filed

STATE OF MICHIGAN
DEPARTMENT OF MANAGEMENT AND BUDGET
PURCHASING OPERATIONS
P.O. BOX 30026, LANSING, MI 48909
OR
530 W. ALLEGAN, LANSING, MI 48933

October 10, 2007

CHANGE NOTICE NO. 1
TO
CONTRACT NO. 071B7200013
between
THE STATE OF MICHIGAN
and

NAME & ADDRESS OF VENDOR	TELEPHONE: Mervin Teague **(248) 477-8700**
Carrier & Gable, Inc. **24110 Research Drive** **Farmington Hills, MI 48335** **mervteague@carriergable.com**	VENDOR NUMBER/MAIL CODE
	BUYER/CA (517) 373-0301 **Sue Cieciwa**

Contract Compliance Inspector: Tim Croze (517) 322-3394

Replacement Parts – Punched Square Tube Breakaway Systems for Highway Signs-Michigan Department of Transportation

CONTRACT PERIOD:	From: **October 4, 2006**	To: **September 30, 2009**

TERMS	SHIPMENT
Net 30 Days	**3 Weeks ARO**
F.O.B.	SHIPPED FROM
Delivered	**N/A**

MINIMUM DELIVERY REQUIREMENTS
N/A

NATURE OF CHANGE (S):

Effective immediately, item nos. 008 and 009 are hereby ADDED to this Contract:

Item No. 008
POSTS, SIGN, BREAKAWAY, UPRIGHT $121.00 each
POST, OUTER 2 1/2" X 16' 10 GAUGE FOR THE PUNCHED SQUARE TUBE BREAKAWAY SYSTEM.

IN COMPLIANCE WITH MDOT STANDARD PLAN VIII-205E AND MDOT SPECIAL PROVISION FOR PUNCHED SQUARE TUBE SIGN BREAKAWAY SYSTEM ATTACHED.

MICHIGAN PART NUMBER: M-26

Name of Manufacturer: Ulti-Mate Hwy. Products
Location (City/State): Stanton, CA

Name of Distributor: Carrier & Gable, Inc.
Location (City/State): Farmington Hills, MI

<u>Item No. 009</u>
POSTS, SIGN, BREAKAWAY, UPRIGHT $91.00 each
POST, OUTER 2 1/2" X 14' 10 GAUGE FOR THE PUNCHED SQUARE TUBE BREAKAWAY SYSTEM.

IN COMPLIANCE WITH MDOT STANDARD PLAN VIII-205E AND MDOT SPECIAL PROVISION FOR PUNCHED SQUARE TUBE SIGN BREAKAWAY SYSTEM ATTACHED.

MICHIGAN PART NUMBER: M-27

Name of Manufacturer: Ulti-Mate Hwy. Products
Location (City/State): Stanton, CA

Name of Distributor: Carrier & Gable, Inc.
Location (City/State): Farmington Hills, MI

All other terms and conditions, specifications, and pricing remain unchanged.

A revised item listing/pricing page is attached.

AUTHORITY/REASON:

Per agency request dated September 25, 2007 and vendor letter dated September 24, 2007.

TOTAL ESTIMATED CONTRACT VALUE REMAINS: $309,840.00

ITEM LISTING/PRICING PAGE

Item No.	Est. 3 Year Quantity*	Unit	NIGP Code	Description	Unit Price	Total Price
001	900	Each	801-30-49	**POSTS, SIGN, BREAKAWAY, UPRIGHT** WINGED ANCHOR ASSEMBLY 2 1/4" X 36" - 2 1/2" X 18" FOR SOIL INSTALLATION FOR PUNCHED SQUARE TUBE BREAKAWAY SYSTEM. IN COMPLIANCE WITH MDOT STANDARD PLAN VIII-205E AND MDOT SPECIAL PROVISION FOR PUNCHED SQUARE TUBE SIGN BREAKAWAY SYSTEM ATTACHED. MICHIGAN PART NUMBER: M-01 Name of Manufacturer: Ulti-Mate Hwy. Products Location (City/State): Stanton, CA Name of Distributor: Carrier & Gable, Inc. Location (City/State): Farmington Hills, MI	$46.10	$41,490.00
002	1,050	Each	801-30-49	**POSTS, SIGN, BREAKAWAY, UPRIGHT** SQUARE POST BREAKAWAY ASSEMBLY 2 3/16", 10 GAUGE FOR PUNCHED SQUARE TUBE BREAKAWAY SYSTEM. IN COMPLIANCE WITH MDOT STANDARD PLAN VIII-205E AND MDOT SPECIAL PROVISION FOR PUNCHED SQUARE TUBE SIGN BREAKAWAY SYSTEM ATTACHED. MICHIGAN PART NUMBER: M-02 Name of Manufacturer: Ulti-Mate Hwy. Products Location (City/State): Stanton, CA Name of Distributor: Carrier & Gable, Inc. Location (City/State): Farmington Hills, MI	$132.35	$138,967.50

ITEM LISTING/PRICING PAGE (Continued)

Item No.	Est. 3 Year Quantity*	Unit	NIGP Code	Description	Unit Price	Total Price
003	750	Each	801-30-49	POSTS, SIGN, BREAKAWAY, UPRIGHT POST, INNER 2 3/16" X 7' 10 GAUGE FOR THE PUNCHED SQUARE TUBE BREAKAWAY SYSTEM. IN COMPLIANCE WITH MDOT STANDARD PLAN VIII-205E AND MDOT SPECIAL PROVISION FOR PUNCHED SQUARE TUBE SIGN BREAKAWAY SYSTEM ATTACHED. MICHIGAN PART NUMBER: M-03 Name of Manufacturer: Ulti-Mate Hwy. Products Location (City/State): Stanton, CA Name of Distributor: Carrier & Gable, Inc. Location (City/State): Farmington Hills, MI	$44.95	$33,712.50
004	750	Each	801-30-49	**POSTS, SIGN, BREAKAWAY, UPRIGHT** POST, OUTER 2 1/2" X 14' 10 GAUGE FOR THE PUNCHED SQUARE TUBE BREAKAWAY SYSTEM. IN COMPLIANCE WITH MDOT STANDARD PLAN VIII-205E AND MDOT SPECIAL PROVISION FOR PUNCHED SQUARE TUBE SIGN BREAKAWAY SYSTEM ATTACHED. MICHIGAN PART NUMBER: M-04 Name of Manufacturer: Ulti-Mate Hwy. Products Location (City/State): Stanton, CA Name of Distributor: Carrier & Gable, Inc. Location (City/State): Farmington Hills, MI	$105.15	$78,862.50

ITEM LISTING/PRICING PAGE (Continued)

Item No.	Est. 3 Year Quantity*	Unit	NIGP Code	Description	Unit Price	Total Price
005	1,200	Each	320-20	**BOLTS, STEEL** 3/8" - 16 X 3" GRADE 5 HEX HEAD STEEL BOLTS WITH NUTS (5 EACH) FOR THE PUNCHED SQUARE TUBE BREAKAWAY SYSTEM. IN COMPLIANCE WITH MDOT STANDARD PLAN VIII-205E AND MDOT SPECIAL PROVISION FOR PUNCHED SQUARE TUBE SIGN BREAKAWAY SYSTEM ATTACHED. MICHIGAN PART NUMBER: M-05 Name of Manufacturer: Ulti-Mate Hwy. Products Location (City/State): Stanton, CA Name of Distributor: Carrier & Gable, Inc. Location (City/State): Farmington Hills, MI	$.55	$660.00
006	300	Each	320-20	**BOLTS, STEEL** BALL BEARING PLATE ASSEMBLY FOR THE PUNCHED SQUARE TUBE BREAKAWAY SYSTEM. IN COMPLIANCE WITH MDOT STANDARD PLAN VIII-205E AND MDOT SPECIAL PROVISION FOR PUNCHED SQUARE TUBE SIGN BREAKAWAY SYSTEM ATTACHED. MICHIGAN PART NUMBER: M-07 Name of Manufacturer: Ulti-Mate Hwy. Products Location (City/State): Stanton, CA Name of Distributor: Carrier & Gable, Inc. Location (City/State): Farmington Hills, MI	$30.70	$9,210.00

ITEM LISTING/PRICING PAGE (Continued)

Item No.	Est. 3 Year Quantity*	Unit	NIGP Code	Description	Unit Price	Total Price
007	750	Each	320-20	**BOLTS, STEEL** 1/2" - 13 X 3" STAINLESS STEEL HEX HEAD BOLTS WITH NUTS AND WASHERS FOR THE PUNCHED SQUARE TUBE BREAKAWAY SYSTEM. IN COMPLIANCE WITH MDOT STANDARD PLAN VIII-205E AND MDOT SPECIAL PROVISION FOR PUNCHED SQUARE TUBE SIGN BREAKAWAY SYSTEM ATTACHED. MICHIGAN PART NUMBER: M-08 Name of Manufacturer: Ulti-Mate Hwy. Products Location (City/State): Stanton, CA Name of Distributor: Carrier & Gable, Inc. Location (City/State): Farmington Hills, MI	$9.25	$6,937.50
008	unknown	Each	801-30-49	**POSTS, SIGN, BREAKAWAY, UPRIGHT** POST, OUTER 2 1/2" X 16' 10 GAUGE FOR THE PUNCHED SQUARE TUBE BREAKAWAY SYSTEM. IN COMPLIANCE WITH MDOT STANDARD PLAN VIII-205E AND MDOT SPECIAL PROVISION FOR PUNCHED SQUARE TUBE SIGN BREAKAWAY SYSTEM ATTACHED. MICHIGAN PART NUMBER: M-26 Name of Manufacturer: Ulti-Mate Hwy. Products Location (City/State): Stanton, CA Name of Distributor: Carrier & Gable, Inc. Location (City/State): Farmington Hills, MI	$121.00	

009	unknown	Each	801-30-49	**POSTS, SIGN, BREAKAWAY, UPRIGHT** POST, OUTER 2 1/2" X 12' 10 GAUGE FOR THE PUNCHED SQUARE TUBE BREAKAWAY SYSTEM. IN COMPLIANCE WITH MDOT STANDARD PLAN VIII-205E AND MDOT SPECIAL PROVISION FOR PUNCHED SQUARE TUBE SIGN BREAKAWAY SYSTEM ATTACHED. MICHIGAN PART NUMBER: M-27 Name of Manufacturer: Ulti-Mate Hwy. Products Location (City/State): Stanton, CA Name of Distributor: Carrier & Gable, Inc. Location (City/State): Farmington Hills, MI	$91.00	
				TOTAL ESTIMATED CONTRACT VALUE:		**$309,840.00**

*Individual quantities estimated based upon prior purchases and not guaranteed.

The terms and conditions require **no minimum order**.

Persons responsible for administering this Contract.

NAME: Merv Teague

TITLE: Sales Representative

PHONE: (248) 477-8700

FAX: (248) 473-0730

E-MAIL: mervteague@carriergable.com

Name: Joe Rodes

TITLE: Operations Manager

PHONE: (248) 477-8700

FAX: (248) 473-0730

E-MAIL: joerodes@carriergable.com

Form No. DMB 234 (Rev. 1/96)
AUTHORITY: Act 431 of 1984
COMPLETION: Required
PENALTY: Contract will not be executed unless form is filed

STATE OF MICHIGAN
DEPARTMENT OF MANAGEMENT AND BUDGET
PURCHASING OPERATIONS
P.O. BOX 30026, LANSING, MI 48909
OR
530 W. ALLEGAN, LANSING, MI 48933

October 13, 2006

NOTICE
TO
CONTRACT NO. 071B7200013
between
THE STATE OF MICHIGAN
and

NAME & ADDRESS OF VENDOR **Carrier & Gable, Inc.** **24110 Research Drive** **Farmington Hills, MI 48335** **mervteague@carriergable.com**	TELEPHONE: Mervin Teague **(248) 477-8700** VENDOR NUMBER/MAIL CODE BUYER/CA (517) 373-0301 **Sue Cieciwa**
Contract Compliance Inspector: Tim Croze (517) 322-3394 **Replacement Parts – Punched Square Tube Breakaway Systems for Highway Signs-Michigan Department of Transportation**	
CONTRACT PERIOD: From: **October 4, 2006** To: **September 30, 2009**	
TERMS **Net 30 Days**	SHIPMENT **3 Weeks ARO**
F.O.B. **Delivered**	SHIPPED FROM **N/A**
MINIMUM DELIVERY REQUIREMENTS **No Minimum Order Requirement**	
MISCELLANEOUS INFORMATION:	

The terms and conditions of this Contract are those of ITB #071I6200335 this Contract Agreement and the vendor's quote dated August 2, 2006. In the event of any conflicts between the specifications, terms and conditions indicated by the State and those indicated by the vendor, those of the State take precedence.

Estimated Contract Value: $309,840.00

Form No. DMB 234 (Rev. 1/96)
AUTHORITY: Act 431 of 1984
COMPLETION: Required
PENALTY: Contract will not be executed unless form is filed

STATE OF MICHIGAN
DEPARTMENT OF MANAGEMENT AND BUDGET
PURCHASING OPERATIONS
P.O. BOX 30026, LANSING, MI 48909
OR
530 W. ALLEGAN, LANSING, MI 48933

CONTRACT NO. 071B7200013
between
THE STATE OF MICHIGAN
and

NAME & ADDRESS OF VENDOR	TELEPHONE: Mervin Teague **(248) 477-8700**
Carrier & Gable, Inc. **24110 Research Drive** **Farmington Hills, MI 48335** **mervteague@carriergable.com**	VENDOR NUMBER/MAIL CODE
	BUYER/CA (517) 373-0301 **Sue Cieciwa**

Contract Compliance Inspector: Tim Croze (517) 322-3394

Replacement Parts – Punched Square Tube Breakaway Systems for Highway Signs-Michigan Department of Transportation

CONTRACT PERIOD:	From: **October 4, 2006**	To: **September 30, 2009**
TERMS **Net 30 Days**	SHIPMENT **3 Weeks ARO**	
F.O.B. **Delivered**	SHIPPED FROM **N/A**	

MINIMUM DELIVERY REQUIREMENTS
No Minimum Order Requirement

MISCELLANEOUS INFORMATION:
The terms and conditions of this Contract are those of ITB #071I6200335 this Contract Agreement and the vendor's quote dated August 2, 2006. In the event of any conflicts between the specifications, terms and conditions indicated by the State and those indicated by the vendor, those of the State take precedence.

Estimated Contract Value: $309,840.00

THIS IS NOT AN ORDER: This Contract Agreement is awarded on the basis of our inquiry bearing the ITB No.071I6200335. Orders for delivery will be issued directly by the Department of Transportation through the issuance of a Purchase Order Form.

All terms and conditions of the invitation to bid are made a part hereof.

FOR THE VENDOR:	**FOR THE STATE:**
Carrier & Gable, Inc. Firm Name	Signature
Authorized Agent Signature	**Jeffrey A. White, Buyer Manager** Name/Title
Authorized Agent (Print or Type)	**Commodities Division, Purchasing Operations** Division
Date	Date

STATE OF MICHIGAN
DEPARTMENT OF MANAGEMENT AND BUDGET
PURCHASING OPERATIONS

Contract No. 071B7200013

REPLACEMENT PARTS –
PUNCHED SQUARE TUBE BREAKAWAY SYSTEMS FOR HIGHWAY SIGNS

Michigan Department of Transportation

Buyer Name: Sue Cieciwa
Telephone Number: (517) 373-0301
E-Mail Address: CieciwaS@michigan.gov

Replacement Parts – Punched Square Tube Breakaway Systems for Highway Signs

Article1 – Statement of Work (SOW) 1
1.0 Introduction 1
1.001 DEFINING DOCUMENT 1
1.002 PROJECT TITLE AND DESCRIPTION 1
1.003 PROJECT CONTROL 1
1.004 COMMENCEMENT OF WORK 1
1.1 Product Quality 1
1.101 SPECIFICATIONS 1
1.102 RESERVED 2
1.103 RESERVED 2
1.104 WARRANTY FOR PRODUCTS OR SERVICES 2
1.2 Service Capabilities 2
1.201 CUSTOMER SERVICE/ORDERING 2
1.202 TRAINING 3
1.203 REPORTING 3
1.204 SPECIAL PROGRAMS-RESERVED 3
1.205 RESERVED 3
1.3 Delivery Capabilities 3
1.301 TIME FRAMES 3
1.302 MINIMUM ORDER 3
1.303 PACKAGING 3
1.304 PALLETIZING 3
1.305 DELIVERY TERM 4
1.306 RESERVED 4
1.4 Project Price 4
1.401 PROPOSAL PRICING 4
1.402 QUICK PAYMENT TERMS 4
1.403 PRICE TERM 4
1.5 Quantity term 4
1.6 Other Terms and Conditions Needed for this Contract 4
Article 2 – General Terms and Conditions 5
2.0 Introduction 5
2.001 GENERAL PURPOSE 5
2.002 ISSUING OFFICE AND CONTRACT ADMINISTRATOR 5
2.003 NOTICE 5
2.004 CONTRACT TERM 5
2.005 GOVERNING LAW 6
2.006 APPLICABLE STATUTES 6
2.007 RELATIONSHIP OF THE PARTIES 7
2.008 HEADINGS 7
2.009 MERGER 7
2.010 SEVERABILITY 7
2.011 SURVIVORSHIP 7
2.012 NO WAIVER OF DEFAULT 7
2.013 PURCHASE ORDERS 7
2.1 Vendor/Contractor Obligations 7
2.101 ACCOUNTING RECORDS 7
2.102 NOTIFICATION OF OWNERSHIP 7
2.103 RESERVED 8
2.104 RESERVED 8
2.105 RESERVED 8
2.106 PREVAILING WAGE-RESERVED 8
2.107 PAYROLL AND BASIC RECORDS-RESERVED 8
2.108 COMPETITION IN SUB-CONTRACTING 8
2.109 RESERVED 8
2.2 Contract Performance 8

2.201 RESERVED **8**
2.202 CONTRACT PAYMENT SCHEDULE **8**
2.203 POSSIBLE PROGRESS PAYMENTS-RESERVED **8**
2.204 STATE ADMINISTRATIVE FEE - RESERVED **9**
2.205 ELECTRONIC PAYMENT AVAILABILITY **9**
2.206 MiDEAL PROGRAM (IF APPLICABLE) **9**
2.3 Contract Rights and Obligations 9
2.301 INCURRING COSTS **9**
2.302 CONTRACTOR RESPONSIBILITIES **9**
2.303 ASSIGNMENT AND DELEGATION **9**
2.304 TAXES **9**
2.305 INDEMNIFICATION **10**
2.306 LIMITATION OF LIABILITY **12**
2.307 CONTRACT DISTRIBUTION **12**
2.308 FORM, FUNCTION, AND UTILITY-RESERVED **12**
2.309 ASSIGNMENT OF ANTITRUST CAUSE OF ACTION **12**
2.310 LIABILITY INSURANCE **12**
2.311 WORKPLACE SAFETY **15**
2.312 WORKPLACE DISCRIMINATION **15**
2.313 RESERVED **15**
2.314 WEBSITE INCORPORATION **15**
2.4 Contract Review and Evaluation 16
2.401 CONTRACT COMPLIANCE INSPECTOR **16**
2.402 PERFORMANCE REVIEWS **16**
2.403 AUDIT OF CONTRACT COMPLIANCE/ RECORDS AND INSPECTIONS **16**
2.5 Quality and Warranties 16
2.501 PROHIBITED PRODUCTS **16**
2.502 QUALITY ASSURANCE **16**
2.503 INSPECTION **17**
2.504 GENERAL WARRANTIES (goods) **17**
2.505 CONTRACTOR WARRANTIES-RESERVED **17**
2.506 RESERVED **17**
2.507 RESERVED **17**
2.508 RESERVED **17**
2.509 RESERVED **17**
2.6 Breach of Contract 17
2.601 BREACH DEFINED **17**
2.602 NOTICE AND THE RIGHT TO CURE **17**
2.603 EXCUSABLE FAILURE **18**
2.7 Remedies 18
2.701 CANCELLATION **18**
2.702 RIGHTS UPON CANCELLATION **19**
2.703 LIQUIDATED DAMAGES-RESERVED **19**
2.704 STOP WORK-RESERVED **20**
2.705 SUSPENSION OF WORK-RESERVED **20**
2.8 Changes, Modifications, and Amendments 20
2.801 APPROVALS **20**
2.802 TIME EXTENTIONS **20**
2.803 MODIFICATION **20**
2.804 AUDIT AND RECORDS UPON MODIFICATION **20**
2.805 CHANGES **21**

Attachments:

Specifications

MDOT Standard Plan VIII-205E dated 10/17/05

MDOT Special Provision for Punched Square Tube Sign Breakaway System

Item Listing/Pricing Page

Article1 – Statement of Work (SOW)

1.0 Introduction

1.001 DEFINING DOCUMENT

This Contract contains or incorporates defined requirements, the specifications and scope of work, and all contractual terms and conditions.

1.002 PROJECT TITLE AND DESCRIPTION

This Contract is for replacement parts for the punched square tube breakaway systems for highway signs.

Background Information:

These new breakaway systems for highway signs are being installed by MDOT on interstates and freeways in locations where there is a high frequency of cars leaving the roadway. The new breakaway systems will reduce damage to vehicles that hit them as well as reduce time and costs to replace signs that have been hit.

1.003 PROJECT CONTROL

Project Control

a. The Contractor will carry out this project under the direction and control of MDOT.

b. Although there will be continuous liaison with the Contractor team, the client agency's project director will meet *monthly* as a minimum, with the Contractor's project manager for the purpose of reviewing progress and providing necessary guidance to the Contractor in solving problems that arise.

1.004 COMMENCEMENT OF WORK

Contractor shall show acceptance of this agreement by signing a copy of this contract and returning it to the contract administrator. Contractor shall not proceed with performance of the work to be done under this agreement, including the purchase of necessary materials, until both parties have signed this agreement to show acceptance of its terms.

1.1 Product Quality

1.101 SPECIFICATIONS

Approved Brands or Manufacturers' lines - Acceptable brands are noted on the "Item Listing/Pricing Page" (attached).

The following parts must be supplied in accordance to MDOT Standard Plan VIII-205E and MDOT Special Provision for Punched Square Tube Sign Breakaway System (attached).

Item 1
Winged anchor assembly 2 ¼" X 36" – 2 ½" X 18" for soil installation for punched square tube breakaway system. Must be supplied using materials and hardware detailed in MDOT Standard Plan VIII-205E (attached).

Item 2
Square post breakaway assembly 2 3/16", 10 gauge for punched square tube breakaway system. Must be supplied using materials and hardware detailed in MDOT standard Plan VIII-205E (attached).

Item 3
Post, Inner 2 3/16" X 7' 10 gauge for the punched square tube breakaway system. Must be supplied using materials and hardware detailed in MDOT standard Plan VIII-205E (attached).

Item 4
Post, Outer 2 1/2" X 14' 10 gauge for the punched square tube breakaway system. Must be supplied using materials and hardware detailed in MDOT standard Plan VIII-205E (attached).

Item 5
3/8"-16 X 3", Grade 5 Hex Head Steel Bolts with Nuts (5 each) for the punched square tube breakaway system. Must be supplied using materials and hardware detailed in MDOT standard Plan VIII-205E (attached).

Item 6
Ball Bearing Plate Assembly for the punched square tube breakaway system. Must be supplied using materials and hardware detailed in MDOT standard Plan VIII-205E (attached).

Item 7
½" – 13 X 3" Stainless steel hex head bolts with nuts and washers for the punched square tube breakaway system. Must be supplied using materials and hardware detailed in MDOT standard Plan VIII-205E (attached).

1.102 RESERVED

1.103 RESERVED

1.104 WARRANTY FOR PRODUCTS OR SERVICES

The warranty for products or services procured under this Contract shall be the warranty offered by the manufacturer. Normal industry standard warranties are for one (1) year from date of shipment of the product. The warranty guarantees that all material supplied shall be free from all defects in material and workmanship. Some products are provided with a two (2) year warranty and some provide a five (5 - 7) year warranty.

Upon notification of a defective product by phone, E-Mail, fax or letter, MDOT can do one of the following: return the product to Contractor vial mail, UPS, or best way; deliver the product to Contractor for repair; or request Contractor pick up the defective product. In all cases, a return form is provided to document receipt and shipment of the returned product(s).

Damaged or defective products are returned to the manufacturer for repair, repaired by Contractor or replaced with a new identical product.

Contact: Jason Archibald, Warehouse Manager – Repairs & Returns
Phone: (248) 477-8700
Fax: (248) 473-0730
Email: jasonarchibald@carriergable.com

1.2 Service Capabilities

1.201 CUSTOMER SERVICE/ORDERING

The Contractor shall have the capacity to receive orders electronically, by phone, facsimile, and by written order. The Contractor shall provide a statewide toll-free phone number for phone orders. Contractor shall have internal controls, approved by Purchasing Operations, to insure that authorized individuals with the State place orders. The Contractor shall verify orders that have quantities that appear to be abnormal or excessive.

The Contractor shall have an accessible customer service department with an individual specifically assigned to State of Michigan accounts. The Contractor's customer service must respond to State agency inquiries promptly.

Any supplies and services to be furnished under this contract shall be ordered by issuance of delivery orders or task orders by the individuals or activities designated in the Schedule.

All delivery orders or task orders are subject to the terms and conditions of this contract. In the event of conflict between a delivery order or task order and this contract, the contract shall control.

If mailed, a delivery order or task order is considered "issued" when the State deposits the order in the mail. Orders may be issued orally, by facsimile, or by electronic commerce methods.

Contact: Joe Rodes, Operations Manager – Customer Service
Phone: (248) 477-8700
Fax: (248) 473-0730
Email: joerodes@carriergable.com

1.202 TRAINING

The Contractor shall provide training to individual agencies, when necessary, on aspects of ordering, shipping, billing, and receiving. At the request of the Contract Administrator, the Contractor shall provide in-service training to agency personnel on products, installation, and product safety issues. The Contractor shall also provide agency training jointly with the State as needed during the period covered by the contract at no additional charge.

1.203 REPORTING

Contractor shall be able to provide various reports, when requested by the State. Examples include itemized report of total items (commodities and services) purchased by all agencies or individual agencies, open invoice reports, delivery compliance reports, quantity reports, service compliance reports, etc.

1.204 SPECIAL PROGRAMS - RESERVED

1.205 RESERVED

1.3 Delivery Capabilities

1.301 TIME FRAMES

All orders shall be delivered within three weeks after receipt of order.

1.302 MINIMUM ORDER

There is no minimum order requirement.

1.303 PACKAGING

The Contractor is required to provide packaging that most closely meets these packaging sizes. The state reserves the right of final approval on packaging offered by the Contractor.

Packaging and containers, etc., shall be in accordance with supplier's commercial practice and shall meet the requirements of Department of Transportation (D.O.T.) and rail and motor carrier freight classifications in effect at time of shipment, which will permit application of the lowest freight rate.

1.304 PALLETIZING

Shipments shall be palletized whenever possible and shall conform to the following:

- Manufacturers standard 4-way shipping pallets are acceptable.
- Maximum height: 5'6"; including pallet.
- Maximum weight: 3500 pounds; including pallet.
- Pallets are to be securely banded or shrink-wrapped.
- The cost of palletizing must be included in the unit price.

1.305 DELIVERY TERM

Prices shall be "F.O.B. Delivered" with transportation charges prepaid on all orders (no minimum order) to the State.

1.306 RESERVED

1.4 Project Price

1.401 PROPOSAL PRICING

Please refer to the attached Item Listing for pricing for the items included on this Contract.

1.402 QUICK PAYMENT TERMS -- RESERVED

1.403 PRICE TERM

Prices quoted are the maximum for a period of 365 days from the date the Contract becomes effective.

Prices are subject to change at the end of each 365-day period. Such changes shall be based on changes in actual costs incurred. Documentation of such changes must be provided with the request for price change in order to substantiate any requested change. Purchasing Operations reserves the right to consider various pertinent information sources to evaluate price increase requests (such as the CPI and PPI, US City Average, as published by the US Department of Labor, Bureau of Labor Statistics). Purchasing Operations also reserves the right to consider other information related to special economic and/or industry circumstances, when evaluating a price change request. Changes may be either increases or decreases, and may be requested by either party. Approved changes shall be firm for the remainder of the Contract period unless further revised at the end of the next 365-day period.

Requests for price changes shall be RECEIVED IN WRITING AT LEAST TEN DAYS PRIOR TO THEIR EFFECTIVE DATE, and are subject to written acceptance before becoming effective. In the event new prices are not acceptable, the CONTRACT may be cancelled. The continued payment of any charges due after September 30th of any fiscal year will be subject to the availability of an appropriation for this purpose.

1.5 Quantity term

Vendor agrees to supply all that the state requires

1.6 Other Terms and Conditions Needed for this Contract

Article 2 – General Terms and Conditions

2.0 Introduction

2.001 GENERAL PURPOSE

The Contract is for replacement parts for the punched square tube breakaway systems for highway signs for the Michigan Department of Transportation. Exact quantities to be purchased are unknown, however the Contractor will be required to furnish all such materials and services as may be ordered during the CONTRACT period. Quantities specified if any, are estimates based on prior purchases, and the State is not obligated to purchase in these or any other quantities. Orders for delivery will be issued directly to the Contractor by various State Agencies on the Purchase Order Contract Release Form.

MDOT Central Sign Shop and Central Warehouse may order from the Contract. This shall not limit participation of additional agencies/locations as the need may develop at the same prices, terms and conditions.

2.002 ISSUING OFFICE AND CONTRACT ADMINISTRATOR

The Contract is issued by Purchasing Operations, State of Michigan, Department of Management and Budget, hereinafter known as Purchasing Operations, for the Michigan Department of Transportation, hereinafter known as MDOT. Where actions are a combination of those of Purchasing Operations and the State agencies, the authority will be known as the State.

Purchasing Operations is the sole point of contact in the State with regard to all procurement and contractual matters relating to the commodities and/or services described herein. Purchasing Operations is the only office authorized to negotiate, change, modify, amend, alter, clarify, etc., the specifications, terms, and conditions of the Contract. Purchasing Operations will remain the SOLE POINT OF CONTACT throughout the procurement process.

Contractor proceeds at its own risk if it takes negotiation, changes, modification, alterations, amendments, clarification, etc., of the specifications, terms, or conditions of the contract from any individual or office other than Purchasing Operations and the listed contract administrator

All communications covering this procurement must be addressed to contract administrator indicated below:

Department of Management and Budget
Purchasing Operations
Attn: Sue Cieciwa, Buyer Specialist
2nd Floor, Mason Building
P.O. Box 30026
Lansing, Michigan 48909
(517) 373-0301
cieciwas@michigan.gov

2.003 NOTICE

Any notice given to a party under this Contract must be written and shall be deemed effective, if addressed to such party as addressed below upon (i) delivery, if hand delivered; (ii) receipt of a confirmed transmission by facsimile if a copy of the notice is sent by another means specified in this section; (iii) the third (3rd) Business Day after being sent by U.S. mail, postage pre-paid, return receipt requested; or (iv) the next Business Day after being sent by a nationally recognized overnight express courier with a reliable tracking system.

2.004 CONTRACT TERM

The term of this Contract will be for three (3) years and will commence with the issuance of a Contract. This will be approximately October 4, 2006 through September 30, 2009.

Option. The State reserves the right to exercise two (2) one-year options, at the sole option of the State. Contractor performance, quality of products, price, cost savings, and the contractor's ability to deliver on time are some of the criteria that will be used as a basis for any decision by Purchasing Operations to exercise an option year.

Extension. At the sole option of the State, the contract may also be extended. Contractor performance, quality of products, price, cost savings, and the contractor's ability to deliver on time are some of the criteria that will be used as a basis for any decision by Purchasing Operations to exercise an option year.

Written notice will be provided to the Contractor within thirty (30) days, provided that the State gives the Contractor a preliminary written notice of its intent to extend at least sixty (60) days before the contract expires. The preliminary notice does not commit the State to an extension. If the State exercises this option, the extended contract shall be considered to include this option clause.

2.005 GOVERNING LAW

The Contract shall in all respects be governed by, and construed in accordance with, the laws of the State of Michigan. By signing this agreement, vendor consents to personal jurisdiction in the state of Michigan. Any dispute arising herein shall be resolved in the State of Michigan.

2.006 APPLICABLE STATUTES

The following statutes, rules, and laws are applicable to the performance of this contract; some statutes are reflected in the clauses of this contract. This list is NOT exhaustive.

MI Uniform Commercial Code (MIUCC) MCL 440. (All sections unless otherwise altered by agreement)
MI OSHA MCL §§ 408.1001 – 408.1094
Freedom of Information Act (FIOA) MCL §§ 15.231, et seq.
Natural Resources and Environmental Protection Act MCL §§ 324.101, et seq.
MI Consumer Protection Act MCL §§ 445.901 – 445.922
Laws relating to wages, payments of wages, and fringe benefits on state projects MCL §§ 408.551 – 408.558, 408.471 – 408.490, 1965 PA 390.
Department of Civil Service Rules and regulations
Elliot Larsen Civil Rights Act MCL §§ 37.2201, et seq.
Persons with disabilities Civil Rights Act MCL §§ 37.1101, et seq.
MCL §§ 423.321, et seq.
MCL § 18.1264 (law regarding debarment)
Davis-Bacon Act (DBA) 40 USCU §§ 276(a), et seq.
Contract Work Hours and Safety Standards Act (CWHSAA) 40 USCS § 327, et seq.
Business Opportunity Act for Persons with Disabilities MCL §§ 450.791 – 450.795
Rules and regulations of the Environmental Protection Agency
Internal Revenue Code
Rules and regulations of the Equal Employment Opportunity Commission (EEOC)
The Civil Rights Act of 1964, USCS Chapter 42
Title VII, 42 USCS §§ 2000e et seq.
The Americans with Disabilities Act (ADA), 42 USCS §§ 12101 et seq.
The Age Discrimination in Employment Act of 1967 (ADEA), 29 USCS §§ 621, 623 et seq.
The Old Workers Benefit and Protection Act of 1990 (OWBPA), 29 USCS §§ 626, et seq.
The Family Medical Leave Act of 1993 (FMLA), 29 USC §§ 651 et seq.
The Fair Labor Standards Act (FLSA), 29 USC §§ 201 et seq.
Pollution Prevention Act of 1990 (PPA) 42 U.S.C. §13106
Sherman Act, 15 U.S.C.S. § 1 et seq.
Robinson-Patman Act, 15 U.S.C.S. § 13 et. seq.
Clayton Act, 15 U.S.C.S. § 14 et seq.

2.007 RELATIONSHIP OF THE PARTIES

The relationship between the State and the Contractor is that of client and independent Contractor. No agent, employee, or servant of the Contractor or any of its subcontractors shall be or shall be deemed to be an employee, agent, or servant of the State for any reason. The Contractor will be solely and entirely responsible for its acts and the acts of its agents, employees, servants and subcontractors during the performance of this Contract.

2.008 HEADINGS

Captions and headings used in the Contract are for information and organization purposes. Captions and headings, including inaccurate references, do not, in any way, define or limit the requirements or terms and conditions of this Contract.

2.009 MERGER

This document constitutes the complete, final, and exclusive agreement between the parties. All other prior writings and negotiations are ineffective.

2.010 SEVERABILITY

Each provision of the Contract shall be deemed to be severable from all other provisions of the Contract and, if one or more of the provisions of the Contract shall be declared invalid, the remaining provisions of the Contract shall remain in full force and effect.

2.011 SURVIVORSHIP

Any provisions of the Contract that impose continuing obligations on the parties including, but not limited to the Contractor's indemnity and other obligations shall survive the expiration or cancellation of the Contract for any reason.

2.012 NO WAIVER OF DEFAULT

The failure of a party to insist upon strict adherence to any term of the Contract shall not be considered a waiver or deprive the party of the right thereafter to insist upon strict adherence to that term or any other term of the Contract.

2.013 PURCHASE ORDERS

Orders for delivery of commodities and/or services may be issued directly by the State Departments through the issuance of a Purchase Order Form referencing this Contract (Blanket Purchase Order) agreement and the terms and conditions contained herein. Contractor is asked to reference the Purchase Order Number on all invoices for payment.

2.1 Vendor/Contractor Obligations

2.101 ACCOUNTING RECORDS

The Contractor and all subcontractors shall maintain all pertinent financial and accounting records and evidence pertaining to the Contract in accordance with generally accepted principles of accounting and other procedures specified by the State of Michigan. Financial and accounting records shall be made available, upon request, to the State of Michigan, its designees, or the Michigan Auditor General at any time during the Contract period and any extension thereof, and for three years from expiration date and final payment on the Contract or extension thereof.

2.102 NOTIFICATION OF OWNERSHIP

The Contractor shall make the following notifications in writing:

1. When the Contractor becomes aware that a change in its ownership or officers has occurred, or is certain to occur, that could result in changes in the valuation of its capitalized assets in the accounting records, the Contractor shall notify Purchasing Operations within 30 days.

2. The Contractor shall also notify the Purchasing Operations within 30 days whenever changes to asset valuations or any other cost changes have occurred or are certain to occur as a result of a change in ownership or officers.

The Contractor shall:

1. Maintain current, accurate, and complete inventory records of assets and their costs;

2. Provide Purchasing Operations or designated representative ready access to the records upon request;

3. Ensure that all individual and grouped assets, their capitalized values, accumulated depreciation or amortization, and remaining useful lives are identified accurately before and after each of the Contractor's ownership or officer changes; and

4. Retain and continue to maintain depreciation and amortization schedules based on the asset records maintained before each Contractor ownership or officer change.

2.103 RESERVED

2.104 RESERVED

2.105 RESERVED

2.106 PREVAILING WAGE-RESERVED

2.107 PAYROLL AND BASIC RECORDS-RESERVED

2.108 COMPETITION IN SUB-CONTRACTING

The Contractor shall select subcontractors (including suppliers) on a competitive basis to the maximum practical extent consistent with the objectives and requirements of the contract.

2.109 RESERVED

2.2 Contract Performance

2.201 RESERVED

2.202 CONTRACT PAYMENT SCHEDULE

All invoices should reflect actual work done. Specific details of invoices and payments will be agreed upon between the Contract Administrator and the Contractor after the proposed Contract Agreement has been signed and accepted by both the Contractor and the Director of Purchasing Operations, Department of Management & Budget. This activity will occur only upon the specific written direction from Purchasing Operations.

The specific payment schedule for any Contract(s) entered into, as the State and the Contractor(s) will mutually agree upon the result of this RFP. The schedule should show payment amount and should reflect actual work done by the payment dates, less any penalty cost charges accrued by those dates. As a general policy statements shall be forwarded to the designated representative by the 15th day of the following month.

2.203 POSSIBLE PROGRESS PAYMENTS-RESERVED

2.204 STATE ADMINISTRATIVE FEE - RESERVED

2.205 ELECTRONIC PAYMENT AVAILABILITY

Electronic transfer of funds is MANDATORY for State contractors. Vendor is required to register with the State of Michigan Office of Financial Management so the State can make payments related to this Contract electronically at www.cpexpress.state.mi.us.

2.206 MiDEAL PROGRAM - RESERVRED

2.3 Contract Rights and Obligations

2.301 INCURRING COSTS

The State of Michigan is not liable for any cost incurred by the Contractor prior to signing of the Contract. The State fiscal year is October 1st through September 30th. The Contractor(s) should realize that payments in any given fiscal year are contingent upon enactment of legislative appropriations. Total liability of the State is limited to terms and conditions of the Contract.

2.302 CONTRACTOR RESPONSIBILITIES

The Contractor will be required to assume responsibility for all contractual activities, whether or not that Contractor performs them. Further, the State will consider the Contractor to be the sole point of contact with regard to contractual matters, including payment of any and all charges resulting from the anticipated Contract. If any part of the work is to be subcontracted, the Contract must include a list of subcontractors, including firm name and address, contact person and a complete description of work to be subcontracted. The State reserves the right to approve subcontractors and to require the Contractor to replace subcontractors found to be unacceptable. The Contractor is totally responsible for adherence by the subcontractor to all provisions of the Contract. Any change in subcontractors must be approved by the State, in writing, prior to such change.

2.303 ASSIGNMENT AND DELEGATION

The Contractor shall not have the right to assign this Contract, to assign its rights under this contract, or delegate any of its duties or obligations under the Contract to any other party (whether by operation of law or otherwise), without the prior written consent of the State. Any purported assignment in violation of this Section shall be null and void. Further, the Contractor may not assign the right to receive money due under the Contract without the prior written consent of the Director of Purchasing Operations.

The Contractor shall not delegate any duties or obligations under the Contract to a subcontractor other than a subcontractor named and approved in the bid unless the Director of Purchasing Operations has given written consent to the delegation.

Bidder must obtain the approval of the Director of Purchasing Operations before using a place of performance that is different from the address that bidder provided in the bid.

2.304 TAXES

Sales Tax: For purchases made directly by the State of Michigan, the State is exempt from State and Local Sales Tax. Prices shall not include such taxes. Exemption Certificates for State Sales Tax will be furnished upon request.

Federal Excise Tax: The State of Michigan may be exempt for Federal Excise Tax, or such taxes may be reimbursable, if articles purchased under this Contract are used for the State's exclusive use. Certificates exclusive use for the purposes of substantiating a tax-free, or tax-reimbursable sale will be sent to the Contractor upon request. If a sale is tax exempt or tax reimbursable under the Internal Revenue Code, prices shall not include the Federal Excise Tax.

The State's Tax Exempt Certification is available for vendor viewing upon request to the Contract Administrator.

2.305 INDEMNIFICATION

General Indemnification

To the fullest extent permitted by law, the Contractor shall indemnify, defend and hold harmless the State, its departments, divisions, agencies, sections, commissions, officers, employees and agents, from and against all losses, liabilities, penalties, fines, damages and claims (including taxes), and all related costs and expenses (including reasonable attorneys' fees and disbursements and costs of investigation, litigation, settlement, judgments, interest and penalties), arising from or in connection with any of the following:

1. Any claim, demand, action, citation or legal proceeding against the State, its employees and agents arising out of or resulting from (1) the product provided or (2) performance of the work, duties, responsibilities, actions or omissions of the Contractor or any of its subcontractors under this Contract.

2. Any claim, demand, action, citation or legal proceeding against the State, its employees and agents arising out of or resulting from a breach by the Contractor of any representation or warranty made by the Contractor in the Contract;

3. Any claim, demand, action, citation or legal proceeding against the State, its employees and agents arising out of or related to occurrences that the Contractor is required to insure against as provided for in this Contract;

4. Any claim, demand, action, citation or legal proceeding against the State, its employees and agents arising out of or resulting from the death or bodily injury of any person, or the damage, loss or destruction of any real or tangible personal property, in connection with the performance of services by the Contractor, by any of its subcontractors, by anyone directly or indirectly employed by any of them, or by anyone for whose acts any of them may be liable; provided, however, that this indemnification obligation shall not apply to the extent, if any, that such death, bodily injury or property damage is caused solely by the negligence or reckless or intentional wrongful conduct of the State;

5. Any claim, demand, action, citation or legal proceeding against the State, its employees and agents which results from an act or omission of the Contractor or any of its subcontractors in its or their capacity as an employer of a person.

Patent/Copyright Infringement Indemnification

To the fullest extent permitted by law, the Contractor shall indemnify, defend and hold harmless the State, its employees and agents from and against all losses, liabilities, damages (including taxes), and all related costs and expenses (including reasonable attorneys' fees and disbursements and costs of investigation, litigation, settlement, judgments, interest and penalties) incurred in connection with any action or proceeding threatened or brought against the State to the extent that such action or proceeding is based on a claim that any piece of equipment, software, commodity or service supplied by the Contractor or its subcontractors, or the operation of such equipment, software, commodity or service, or the use or reproduction of any documentation provided with such equipment, software, commodity or service infringes any United States or foreign patent, copyright, trade secret or other proprietary right of any person or entity, which right is enforceable under the laws of the United States. In addition, should the equipment, software, commodity, or service, or the operation thereof, become or in the Contractor's opinion be likely to become the subject of a claim of infringement, the Contractor shall at the Contractor's sole expense (i) procure for the State the right to continue using the equipment, software, commodity or service or, if such option is not reasonably available to the Contractor, (ii) replace or modify the same with equipment, software, commodity or service of equivalent function and performance so that it becomes non-infringing, or, if such option is not reasonably available to Contractor, (iii) accept its return by the State with appropriate credits to the State against the Contractor's charges and reimburse the State for any losses or costs incurred as a consequence of the State ceasing its use and returning it.

Code Indemnification

To the extent permitted by law, the Contractor shall indemnify, defend and hold harmless the State from any claim, loss, or expense arising from Contractor's breach of the No Surreptitious Code Warranty.

Indemnification Obligation Not Limited

In any and all claims against the State of Michigan, or any of its agents or employees, by any employee of the Contractor or any of its subcontractors, the indemnification obligation under the Contract shall not be limited in any way by the amount or type of damages, compensation or benefits payable by or for the Contractor or any of its subcontractors under worker's disability compensation acts, disability benefits acts, or other employee benefits acts. This indemnification clause is intended to be comprehensive. Any overlap in sub clauses, or the fact that greater specificity is provided as to some categories of risk, is not intended to limit the scope of indemnification under any other sub clause.

Continuation of Indemnification Obligation

The duty to indemnify will continue in full force and affect not withstanding the expiration or early termination of the Contract with respect to any claims based on facts or conditions, which occurred prior to termination.

Indemnification Procedures

The procedures set forth below shall apply to all indemnity obligations under this Contract.

(a) After receipt by the State of notice of the action or proceeding involving a claim in respect of which it will seek indemnification, the State shall promptly notify Contractor of such claim in writing and take or assist Contractor in taking, as the case may be, any reasonable action to avoid the imposition of a default judgment against Contractor. No failure to so notify Contractor shall relieve Contractor of its indemnification obligations except to the extent that Contractor can demonstrate damages attributable to such failure. Within ten (10) days following receipt of written notice from the State relating to any claim, Contractor shall notify the State in writing whether Contractor agrees to assume control of the defense and settlement of that claim (a "Notice of Election"). After notifying Contractor of a claim and prior to the State receiving Contractor's Notice of Election, the State shall be entitled to defend against the claim, at Contractor's expense, and Contractor will be responsible for any reasonable costs incurred by the State in defending against the claim during such period.

(b) If Contractor delivers a Notice of Election relating to any claim: (i) the State shall be entitled to participate in the defense of such claim and to employ counsel at its own expense to assist in the handling of such claim and to monitor and advise the State about the status and progress of the Defense; (ii) Contractor shall, at the request of the State, demonstrate to the reasonable satisfaction of the State, Contractor's financial ability to carry out its defense and indemnity obligations under this Contract; (iii) Contractor shall periodically advise the State about the status and progress of the defense and shall obtain the prior written approval of the State before entering into any settlement of such claim or ceasing to defend against such claim and (iv) to the extent that any principles of Michigan Stateal or public law may be involved or challenged, the State shall have the right, at its own expense, to control the defense of that portion of such claim involving the principles of Michigan Stateal or public law. Notwithstanding the foregoing, the State may retain control of the defense and settlement of a claim by written notice to Contractor given within ten (10) days after the State's receipt of Contractor' s information requested by the State pursuant to clause (ii) of this paragraph if the State determines that Contractor has failed to demonstrate to the reasonable satisfaction of the State Contractor's financial ability to carry out its defense and indemnity obligations under this Section. Any litigation activity on behalf of the State of Michigan, or any of its subdivisions pursuant to this Section, must be coordinated with the Department of Attorney General. In the event the insurer's attorney represents the State pursuant to this Section, the insurer's attorney may be required to be designated as a Special Assistant Attorney General by the Attorney General of the State of Michigan.

(c) If Contractor does not deliver a Notice of Election relating to any claim of which it is notified by the State as provided above, the State shall have the right to defend the claim in such manner as it may deem appropriate, at the cost and expense of Contractor. If it is determined that the claim was one against which Contractor was required to indemnify the State, upon request of the State, Contractor shall promptly reimburse the State for all such reasonable costs and expenses.

2.306 LIMITATION OF LIABILITY

Except as set forth herein, neither the Contractor nor the State shall be liable to the other party for indirect or consequential damages, even if such party has been advised of the possibility of such damages. Such limitation as to indirect or consequential damages shall not apply to claims for infringement of United States patent, copyright, trademarks or trade secrets; to claims for personal injury or damage to property caused by the gross negligence or willful misconduct of the Contractor; to claims covered by other specific provisions of this Contract calling for liquidated damages; to Contractor's indemnification obligations (2.305); or to court costs or attorney's fees awarded by a court in addition to damages after litigation based on this Contract.

The State's liability for damages to the Contractor shall be limited to the value of the Contract.

2.307 CONTRACT DISTRIBUTION

Purchasing Operations shall retain the sole right of Contract distribution to all State agencies and local units of State unless other arrangements are authorized by Purchasing Operations.

2.308 FORM, FUNCTION, AND UTILITY-RESERVED

2.309 ASSIGNMENT OF ANTITRUST CAUSE OF ACTION

For and in consideration of the opportunity to submit a quotation and other good and valuable consideration, the bidder hereby assigns, sells and transfers to the State of Michigan all rights, title and interest in and to all causes of action it may have under the antitrust laws of the United States or this State for price fixing, which causes of action have accrued prior to the date of payment and which relate solely to the particular goods, commodities, or services purchased or procured by this State pursuant to this transaction.

2.310 LIABILITY INSURANCE

A. <u>Insurance</u>

The Contractor is required to provide proof of the minimum levels of insurance coverage as indicated below. The purpose of this coverage shall be to protect the State from claims which may arise out of or result from the Contractor's performance of services under the terms of this Contract, whether such services are performed by the Contractor, or by any subcontractor, or by anyone directly or indirectly employed by any of them, or by anyone for whose acts they may be liable.

The Contractor waives all rights against the State of Michigan, its departments, divisions, agencies, offices, commissions, officers, employees and agents for recovery of damages to the extent these damages are covered by the insurance policies the Contractor is required to maintain pursuant to this Contract.

All insurance coverage provided relative to this Contract/Purchase Order is PRIMARY and NON-CONTRIBUTING to any comparable liability insurance (including self-insurances) carried by the State.

The insurance shall be written for not less than any minimum coverage specified in this Contract or required by law, whichever is greater.

The insurers selected by Contractor shall have an A.M. Best rating of A or better, or as otherwise approved in writing by the State, or if such ratings are no longer available, with a comparable rating from a recognized insurance rating agency. Companies that have been approved to do business in the State shall issue all policies of insurance required in this Contract.

See www.michigan.gov/cis

Where specific limits are shown, they are the minimum acceptable limits. If Contractor's policy contains higher limits, the State shall be entitled to coverage to the extent of such higher limits.

Before both parties sign the Contract or before the purchase order is issued by the State, the Contractor must furnish to the Director of Purchasing Operations, certificate(s) of insurance verifying insurance coverage ("Certificates"). The Certificate must be on the standard "accord" form or equivalent. **THE CONTRACT OR PURCHASE ORDER NO. MUST BE SHOWN ON THE CERTIFICATE OF INSURANCE TO ASSURE CORRECT FILING.** All Certificate(s) are to be prepared and submitted by the Insurance Provider. All Certificate(s) shall contain a provision indicating that coverage afforded under the policies WILL NOT BE CANCELLED, MATERIALLY CHANGED, OR NOT RENEWED without THIRTY (30) days prior written notice, except for ten (10) days for non-payment of premium, having been given to the Director of Purchasing Operations, Department of Management and Budget. The notice must include the Contract or Purchase Order number affected and be mailed to: Director, Purchasing Operations, Department of Management and Budget, P.O. Box 30026, Lansing, Michigan 48909. Failure to provide evidence of coverage, may, at the State's sole option, result in this Contract's termination.

The Contractor is required to pay for and provide the type and amount of insurance checked **below**:

1. Commercial General Liability with the following minimum coverage:

$2,000,000	General Aggregate Limit other than Products/Completed Operations
$2,000,000	Products/Completed Operations Aggregate Limit
$1,000,000	Personal & Advertising Injury Limit
$1,000,000	Each Occurrence Limit
$500,000	Fire Damage Limit (any one fire)

   The Contractor must list the State of Michigan, its departments, divisions, agencies, offices, commissions, officers, employees and agents as ADDITIONAL INSUREDS on the Commercial General Liability certificate. The Contractor also agrees to provide evidence that insurance policies contain a waiver of subrogation by the insurance company.

2. If a motor vehicle is used to provide services or products under this Contract, the Contractor must have vehicle liability insurance on any auto including owned, hired and non-owned vehicles used in Contractor's business for bodily injury and property damage as required by law.

   The Contractor must list the State of Michigan, its departments, divisions, agencies, offices, commissions, officers, employees and agents as ADDITIONAL INSUREDS on the vehicle liability certificate. The Contractor also agrees to provide evidence that insurance policies contain a waiver of subrogation by the insurance company.

3. Workers' compensation coverage must be provided in accordance with applicable laws governing the employees and employers work activities in the state of the Contractor's domicile. If a self-insurer provides the applicable coverage, proof must be provided of approved self-insured authority by the jurisdiction of domicile. For employees working outside of the state of qualification, Contractor must provide appropriate certificates of insurance proving mandated coverage levels for the jurisdictions where the employees' activities occur.

   Any certificates of insurance received must also provide a list of states where the coverage is applicable.

The Contractor also agrees to provide evidence that insurance policies contain a waiver of subrogation by the insurance company. This provision shall not be applicable where prohibited or limited by the laws of the jurisdiction in which the work is to be performed.

4. Employers liability insurance with the following minimum limits:

$100,000	each accident
$100,000	each employee by disease
$500,000	aggregate disease

5. Employee Fidelity, including Computer Crimes, insurance naming the State as a loss payee, providing coverage for direct loss to the State and any legal liability of the State arising out of or related to fraudulent or dishonest acts committed by the employees of Contractor or its Subcontractors, acting alone or in collusion with others, in a minimum amount of one million dollars ($1,000,000.00) with a maximum deductible of fifty thousand dollars ($50,000.00).

6. Professional Liability (Errors and Omissions) Insurance with the following minimum coverage: three million dollars ($3,000,000.00) each occurrence and three million dollars ($3,000,000.00) annual aggregate.

7. Fire and Personal Property Insurance covering against any loss or damage to the office space used by Contractor for any reason under this Contract, and the equipment, software and other contents of such office space, including without limitation, those contents used by Contractor to provide the Services to the State, up to the replacement value thereof, where such office space and its contents are under the care, custody and control of Contractor. Such policy shall cover all risks of direct physical loss or damage, including without limitation, flood and earthquake coverage and coverage for computer hardware and software. The State shall be endorsed on the policy as a loss payee as its interests appear.

B. <u>Subcontractors</u>

Except where the State has approved in writing a Contractor subcontract with other insurance provisions, Contractor shall require all of its Subcontractors under this Contract to purchase and maintain the insurance coverage as described in this Section for the Contractor in connection with the performance of work by those Subcontractors. Alternatively, Contractor may include any Subcontractors under Contractor's insurance on the coverage required in this Section. Subcontractor(s) shall fully comply with the insurance coverage required in this Section. Failure of Subcontractor(s) to comply with insurance requirements does not limit Contractor's liability or responsibility.

C. <u>Certificates of Insurance and Other Requirements</u>

Contractor shall furnish to the Office of Purchasing Operations certificate(s) of insurance verifying insurance coverage or providing satisfactory evidence of self-insurance as required in this Section (the "Certificates"). Before the Contract is signed, and not less than 20 days before the insurance expiration date every year thereafter, the Contractor shall provide evidence that the State and its agents, officers and employees are listed as additional insureds, but only to the extent of liabilities assumed by Contractor as set forth in Indemnification Section of this Contract, under each commercial general liability and commercial automobile liability policy. In the event the State approves the representation of the State by the insurer's attorney, the attorney may be required to be designated as a Special Assistant Attorney General by the Attorney General of the State of Michigan.

Contractor shall maintain all required insurance coverage throughout the term of the Contract and any extensions thereto and, in the case of claims-made Commercial General Liability policies, shall secure tail coverage for at least three (3) years following the expiration or termination for any reason of this Contract. The minimum limits of coverage specified above are not intended, and shall not be

construed, to limit any liability or indemnity of Contractor under this Contract to any indemnified party or other persons. Contractor shall be responsible for all deductibles with regard to such insurance. If Contractor fails to pay any premium for required insurance as specified in this Contract, or if any insurer cancels or significantly reduces any required insurance as specified in this Contract without the State's written consent, at the State's election (but without any obligation to do so) after the State has given Contractor at least thirty (30) days written notice, the State may pay such premium or procure similar insurance coverage from another company or companies; and at the State's election, the State may deduct the entire cost (or part thereof) from any payment due Contractor, or Contractor shall pay the entire cost (or any part thereof) upon demand by the State.

2.311 WORKPLACE SAFETY

1. In performing work under this Contract on State premises, the Contractor shall conform to any specific safety requirements contained in the Contract or as required by law or regulation. The Contractor shall take any additional precautions as the State may reasonably require for safety and accident prevention purposes. Any violation by the Contractor of such safety requirements, rules, laws or regulations shall be a material breach of the Contract subject to the cancellation provisions contained herein.

2. In performing services for the State pursuant to this Contract, the Contractor shall comply with Department of Civil Service Rules 2-20 regarding Workplace Safety and 1-8.3 regarding Discriminatory Harassment. In addition, the Contractor shall comply with Civil Service Regulations governing workplace safety and discriminatory harassment and any applicable state agency rules on these matters that the agency provides to the Contractor. Department of Civil Service Rules and Regulations can be found on the Department of Civil Service website at www.michigan.gov/mdcs.

2.312 WORKPLACE DISCRIMINATION

The Contractor represents and warrants that in performing services for the State pursuant to this Contract, the Contractor agrees not to discriminate against any employee or applicant for employment, with respect to their hire, tenure, terms, conditions or privileges of employment, or any matter directly or indirectly related to employment, because of race, color, religion, national origin, ancestry, age, sex, height, weight, marital status, physical or mental handicap or disability. The Contractor further agrees that every subcontract entered into for the performance of any Contract or purchase order resulting here from will contain a provision requiring non-discrimination in employment, as herein specified, binding upon each subcontractor. This covenant is required pursuant to the Elliot Larsen Civil Rights Act, 1976 Public Act 453, as amended, MCL 37.2201, et seq., and the Persons With Disabilities Civil Rights Act, 1976 Public Act 220, as amended, MCL 37.1101, et seq., and any breach thereof may be regarded as a material breach of the Contract or purchase order.

Vendor hereby represents that in performing this contract it will not violate The Civil Rights Act of 1964, USCS Chapter 42, including, but not limited to, Title VII, 42 USCS §§ 2000e et seq.; the Americans with Disabilities Act (ADA), 42 USCS §§ 12101 et seq.; or The Age Discrimination in Employment Act of 1967 (ADEA), 29 USCS §§ 621, 623 et seq.; the Old Workers Benefit and Protection Act of 1990 (OWBPA), 29 USCS §§ 626 et seq.; the Family Medical Leave Act of 1993 (FMLA), 29 USC §§ 651 et seq.; or the Fair Labor Standards Act (FLSA), 29 USC §§ 201 et seq.

2.313 RESERVED

2.314 WEBSITE INCORPORATION

State expressly states that it will not be bound by any content on the Contractor's website, even if the Contractor's documentation specifically referenced that content and attempts to incorporate it into any other communication, unless the State has actual knowledge of such content and has expressly agreed to be bound by it in a writing that has been manually signed by an authorized representation of the State.

2.4 Contract Review and Evaluation

2.401 CONTRACT COMPLIANCE INSPECTOR

Upon receipt at Purchasing Operations of the properly executed Contract Agreement(s), the person named below will be allowed to oversee the Contract performance on a day-to-day basis during the term of the Contract. However, overseeing the Contract implies **no authority to negotiate, change, modify, clarify, amend, or otherwise alter the terms, conditions, and specifications of such Contract(s). That authority is retained by Purchasing Operations**. The Contract Compliance Inspector for this project is:

Tim Croze
MDOT Maintenance Division
6333 Old Lansing Road
Lansing, MI 48917
Ph: (517) 322-3394 Fax (517) 322-3385
Email: crozet@michigan.gov

2.402 PERFORMANCE REVIEWS

Purchasing Operations in conjunction with the Michigan Department of Transportation may review with the Contractor their performance under the Contract. Performance reviews shall be conducted quarterly, semi-annually or annually depending on Contractor's past performance with the State. Performance reviews shall include, but not limited to, quality of products/services being delivered and provided, timeliness of delivery, percentage of completion of orders, the amount of back orders, status of such orders, accuracy of billings, customer service, completion and submission of required paperwork, the number of substitutions and the reasons for substitutions, and other requirements of the Contract.

Upon a finding of poor performance, which has been documented by Purchasing Operations, the Contractor shall be given an opportunity to respond and take corrective action. If corrective action is not taken in a reasonable amount of time as determined by Purchasing Operations, the Contract may be canceled for default. Delivery by the Contractor of unsafe and/or adulterated or off-condition products to any State agency is considered a material breach of Contract subject to the cancellation provisions contained herein.

2.403 AUDIT OF CONTRACT COMPLIANCE/ RECORDS AND INSPECTIONS

The Contractor agrees that the State may, upon 24-hour notice, perform an audit at Contractor's location(s) to determine if the Contractor is complying with the requirements of the Contract. The Contractor agrees to cooperate with the State during the audit and produce all records and documentation that verifies compliance with the Contract requirements.

2.5 Quality and Warranties

2.501 PROHIBITED PRODUCTS

The State will not accept salvage, distressed, outdated or discontinued merchandise. Shipping of such merchandise to any State agency, as a result of an order placed against the Contract, shall be considered default by the Contractor of the terms and conditions of the Contract and may result in cancellation of the Contract by the State. The brand and product number offered for all items shall remain consistent for the term of the Contract, unless Purchasing Operations has approved a change.

2.502 QUALITY ASSURANCE

The State reserves the right to periodically test products, which have been received to verify compliance with specifications. If laboratory analysis shows that the product does not meet specifications or fails to perform satisfactorily at any time, the Contractor shall be responsible for:

1. All costs of testing and laboratory analysis.
2. Disposal and/or replacement of all products which fail to meet specifications.
3. All costs of repair and/or replacement of equipment deemed to have been damaged by substandard products as determined by the State.

2.503 INSPECTION

All goods are subject to inspection and testing. In the event goods are defective in material or workmanship, or otherwise fail to meet the requirements of the Contract, the State shall have the right to reject the goods or retain the goods and correct the defects. The Contractor shall pay the State for expenses incurred in correcting defects. Rejected goods will be held for 45 days after delivery. The Contractor must arrange for the return of said goods, including paying for handling, packing, and transportation costs. The State has the authority to dispose of the goods without further liability to the State in the event the Contractor fails to make arrangements within the specified time period.

2.504 GENERAL WARRANTIES (goods)

Warranty of Merchantability – Goods provided by vendor under this agreement shall be merchantable. All goods provided under this contract shall be of good quality within the description given by the State, shall be fit for their ordinary purpose, shall be adequately contained and packaged within the description given by the State, shall conform to the agreed upon specifications, and shall conform to the affirmations of fact made by the vendor or on the container or label.

Warranty of fitness for a particular purpose – When vendor has reason to know or knows any particular purpose for which the goods are required, and the State is relying on the vendor's skill or judgment to select or furnish suitable goods, there is a warranty that the goods are fit for such purpose.

Warranty of title – Vendor shall, in providing goods to the State, convey good title in those goods, whose transfer is right and lawful. All goods provided by vendor shall be delivered free from any security interest, lien, or encumbrance of which the State, at the time of contracting, has no knowledge. Goods provided by vendor, under this agreement, shall be delivered free of any rightful claim of any third person by of infringement or the like.

2.505 CONTRACTOR WARRANTIES-RESERVED

2.506 RESERVED

2.507 RESERVED

2.508 RESERVED

2.509 RESERVED

2.6 Breach of Contract

2.601 BREACH DEFINED

Failure to comply with articles, sections, or subsections of this agreement, or making any false statement in this agreement will be considered a material breach of this agreement giving the state authority to invoke any and all remedies available to it under this agreement.

In addition to any remedies available in law and by the terms of this contract, if the Contractor breaches Sections 2.508, 2.509, or 2.510, such a breach may be considered as a default in the performance of a material obligation of this contract.

2.602 NOTICE AND THE RIGHT TO CURE

In the event of a curable breach by the Contractor, the State shall provide the Contractor written notice of the breach and a time period to cure said breach described in the notice. This section requiring notice and an opportunity to cure shall not be applicable in the event of successive or repeated breaches of the same nature or if the State determines in its sole discretion that the breach poses a serious and imminent threat to the health or safety of any person or the imminent loss, damage or destruction of any real or tangible personal property.

2.603 EXCUSABLE FAILURE

1. Neither party shall be liable for any default or delay in the performance of its obligations under the Contract if and to the extent such default or delay is caused, directly or indirectly, by: fire, flood, earthquake, elements of nature or acts of God; riots, civil disorders, rebellions or revolutions in any country; the failure of the other party to perform its material responsibilities under the Contract (either itself or through another contractor); injunctions (provided the injunction was not issued as a result of any fault or negligence of the party seeking to have its default or delay excused); or any other cause beyond the reasonable control of such party; provided the non-performing party and its subcontractors are without fault in causing such default or delay, and such default or delay could not have been prevented by reasonable precautions and cannot reasonably be circumvented by the non-performing party through the use of alternate sources, workaround plans or other means, including disaster recovery plans. In such event, the non-performing party will be excused from any further performance or observance of the obligation(s) so affected for as long as such circumstances prevail and such party continues to use its best efforts to recommence performance or observance whenever and to whatever extent possible without delay provided such party promptly notifies the other party in writing of the inception of the excusable failure occurrence, and also of its abatement or cessation.

2. If any of the above enumerated circumstances substantially prevent, hinder, or delay performance of the services necessary for the performance of the State's functions for more than 14 consecutive days, and the State determines that performance is not likely to be resumed within a period of time that is satisfactory to the State in its reasonable discretion, then at the State's option: (a) the State may procure the affected services from an alternate source, and the State shall not be liable for payments for the unperformed services under the Contract for so long as the delay in performance shall continue; (b) the State may cancel any portions of the Contract so affected and the charges payable hereunder shall be equitably adjusted to reflect those services canceled; or (c) the Contract will be canceled without liability of the State to the Contractor as of the date specified by the State in a written notice of cancellation to the Contractor. The Contractor will not have the right to any additional payments from the State as a result of any excusable failure occurrence or to payments for services not rendered as a result of the excusable failure condition. Defaults or delays in performance by the Contractor which are caused by acts or omissions of its subcontractors will not relieve the Contractor of its obligations under the Contract except to the extent that a subcontractor is itself subject to any excusable failure condition described above and the Contractor cannot reasonably circumvent the effect of the subcontractor's default or delay in performance through the use of alternate sources, workaround plans or other means.

2.7 Remedies

2.701 CANCELLATION

The State may cancel this Contract without further liability or penalty to the State, its departments, divisions, agencies, offices, commissions, officers, agents, and employees for any of the following reasons:

1. Material Breach by the Contractor. In the event that the Contractor breaches any of its material duties or obligations under the Contract, which are either not capable of or subject to being cured, or are not cured within the time period specified in the written notice of breach provided by the State, or pose a serious and imminent threat to the health and safety of any person, or the imminent loss, damage or destruction of any real or tangible personal property, the State may, having provided written notice of cancellation to the Contractor, cancel this Contract in whole or in part, for cause, as of the date specified in the notice of cancellation.

   In the event that this Contract is cancelled for cause, in addition to any legal remedies otherwise available to the State by law or equity, the Contractor shall be responsible for all costs incurred by the State in canceling the Contract, including but not limited to, State administrative costs, attorneys fees and court costs, and any additional costs the State may incur to procure the services required by this Contract from other sources. All excess re-procurement costs and damages shall not be considered by the parties to be consequential, indirect or incidental, and shall not be excluded by any other terms otherwise included in the Contract.

   In the event the State chooses to partially cancel this Contract for cause charges payable under this Contract will be equitably adjusted to reflect those services that are cancelled.

In the event this Contract is cancelled for cause pursuant to this section, and it is therefore determined, for any reason, that the Contractor was not in breach of contract pursuant to the provisions of this section, that cancellation for cause shall be deemed to have been a cancellation for convenience, effective as of the same date, and the rights and obligations of the parties shall be limited to that otherwise provided in the Contract for a cancellation for convenience.

2. Cancellation For Convenience By the State. The State may cancel this Contract for its convenience, in whole or part, if the State determines that such a cancellation is in the State's best interest. Reasons for such cancellation shall be left to the sole discretion of the State and may include, but not limited to (a) the State no longer needs the services or products specified in the Contract, (b) relocation of office, program changes, changes in laws, rules, or regulations make implementation of the Contract services no longer practical or feasible, and (c) unacceptable prices for additional services requested by the State. The State may cancel the Contract for its convenience, in whole or in part, by giving the Contractor written notice 30 days prior to the date of cancellation. If the State chooses to cancel this Contract in part, the charges payable under this Contract shall be equitably adjusted to reflect those services that are cancelled.

3. Non-Appropriation. In the event that funds to enable the State to effect continued payment under this Contract are not appropriated or otherwise made available. The Contractor acknowledges that, if this Contract extends for several fiscal years, continuation of this Contract is subject to appropriation or availability of funds for this project. If funds are not appropriated or otherwise made available, the State shall have the right to cancel this Contract at the end of the last period for which funds have been appropriated or otherwise made available by giving written notice of cancellation to the Contractor. The State shall give the Contractor written notice of such non-appropriation or unavailability within 30 days after it receives notice of such non-appropriation or unavailability.

4. Criminal Conviction. In the event the Contractor, an officer of the Contractor, or an owner of a 25% or greater share of the Contractor, is convicted of a criminal offense incident to the application for or performance of a State, public or private Contract or subcontract; or convicted of a criminal offense including but not limited to any of the following: embezzlement, theft, forgery, bribery, falsification or destruction of records, receiving stolen property, attempting to influence a public employee to breach the ethical conduct standards for State of Michigan employees; convicted under State or federal antitrust statutes; or convicted of any other criminal offense which in the sole discretion of the State, reflects upon the Contractor's business integrity.

5. Approvals Rescinded. The State may terminate this Contract without further liability or penalty in the event any final administrative or judicial decision or adjudication disapproves a previously approved request for purchase of personal services pursuant to Constitution 1963, Article 11, section 5, and Civil Service Rule 7. Termination may be in whole or in part and may be immediate as of the date of the written notice to Contractor or may be effective as of the date stated in such written notice.

2.702 RIGHTS UPON CANCELLATION

Termination Assistance. If this Contract (or any Statement of Work issued under it) is terminated for any reason prior to completion, Contractor agrees to provide for up to six (6) months after the termination all reasonable termination assistance requested by the State to facilitate the orderly transfer of such Services to the State or its designees in a manner designed to minimize interruption and adverse effect. Such termination assistance will be deemed by the parties to be governed by the terms and conditions of this Contract (notwithstanding its termination) other than any terms or conditions that do not reasonably apply to such termination assistance. Such termination assistance shall be at no additional charge to the State if the termination is for Contractor's Default pursuant to Section 2.602; otherwise the State shall compensate Contractor for such termination assistance on a time and materials basis in accordance with the Amendment Labor Rates identified within this Contract agreement.

2.703 LIQUIDATED DAMAGES-RESERVED

2.704 STOP WORK-RESERVED

2.705 SUSPENSION OF WORK-RESERVED

2.8 Changes, Modifications, and Amendments

2.801 APPROVALS

The Contract may not be modified, amended, extended, or augmented except by a writing executed by the parties hereto, and any breach or default by a party shall not be waived or released other than in writing signed by the other party.

2.802 TIME EXTENTIONS

Time extensions for contract changes will depend upon the extent, if any, by which the changes cause delay in the completion of the various elements of performance as described in the statement of work. The change order granting the time extension may provide that the contract completion date will be extended only for those specific elements related to the changed work and that the remaining contract completion dates for all other portions of the work will not be altered. The change order also may provide an equitable readjustment of liquidated damages under the new completion schedule.

2.803 MODIFICATION

Purchasing Operations reserves the right to modify this contract at any time during the contract term. Such modification may include changing the locations to be serviced, additional locations to be serviced, method or manner of performance of the work, number of days service is to be performed, addition or deletion of tasks to be performed, addition or deletion of items, and/or any other modifications deemed necessary. Any changes in pricing proposed by the Contractor resulting from the proposed changes are subject to acceptance by the State. Changes may be increases or decreases. IN THE EVENT PRICES ARE NOT ACCEPTABLE TO THE STATE, THE CONTRACT SHALL BE SUBJECT TO COMPETITIVE BIDDING BASED UPON THE NEW SPECIFICATION.

The State reserves the right to add an item(s) that is not described on the item listing and is available from the Contract vendor. The item(s) may be included on the Contract, only if prior written approval has been granted by Purchasing Operations.

2.804 AUDIT AND RECORDS UPON MODIFICATION

DEFINITION: records includes books, documents, accounting procedures and practices, and other data, regardless of whether such items are in written form, electronic form, or in any other form

Contractor shall be required to submit cost or pricing data with the pricing of any modification of this contract to the Contract Administrator in Purchasing Operations. Data may include accounting records, payroll records, employee time sheets, and other information the state deems necessary to perform a fair evaluation of the modification proposal. Contract Administrator or authorized representative of the state shall have the right to examine and audit all of the contractor's records, including computations and projections, related to:

1. The proposal for modification;
2. The discussions conducted on the proposal, including those related to negotiation;
3. Pricing of the modification; or
4. Performance of the modification.

Contractor shall make available at its office at all reasonable times the materials described in the paragraphs above.

If this contract is completely or partially terminated, the records relating to the work terminated shall be made available for 3 years after any resulting final termination settlement.

2.805 CHANGES

(a) The Contract Administrator may, at any time, without notice to the sureties, if any, by written order designated or indicated to be a change order, make changes in the work within the general scope of the contract, including changes:

(1) In the specifications (including drawings and designs);
(2) In the method or manner of performance of the work;
(3) In the State-furnished facilities, equipment, materials, services, or site; or
(4) Directing acceleration in the performance of the work.

(a) Any other written or oral order (which, as used in this paragraph (b), includes direction, instruction, interpretation, or determination) from the Contract Administrator that causes a change shall be treated as a change order under this clause; Provided, that the Contractor gives the Contract Administrator written notice stating:

(1) The date, circumstances, and source of the order; and
(2) That the Contractor regards the order as a change order.

(b) Except as provided in this clause, no order, statement, or conduct of the Contract Administrator shall be treated as a change under this clause or entitle the Contractor to an equitable adjustment.

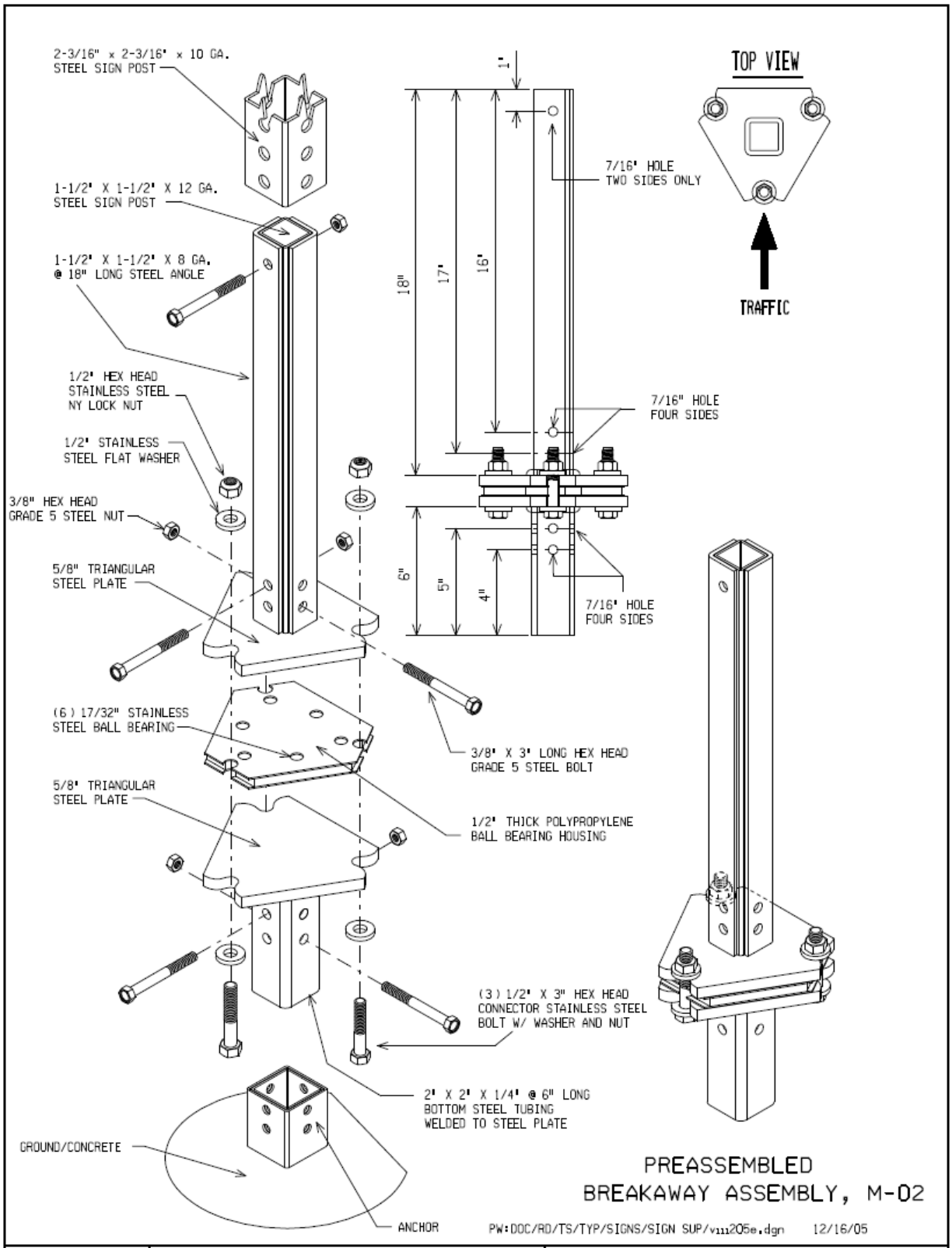

MDOT Michigan Department of Transportation PREPARED BY TRAFFIC & SAFETY		MICHIGAN DEPARTMENT OF TRANSPORTATION BUREAU OF HIGHWAYS TYPICAL PLAN FOR PUNCHED SQUARE TUBE SIGN BREAKAWAY SYSTEM
DRAWN BY: KWK CHECKED BY: AU	ENGINEER OF TRAFFIC AND SAFETY	10/17/05 PLAN DATE · VIII-205E · SHEET 1 of 11

MDOT PART NUMBER	DESCRIPTION
M-01	WINGED ANCHOR ASSEMBLY 2 1/4" X 36" - 2 1/2" X 18" FOR SOIL INSTALLATION
M-02	ASSEMBLY, SQUARE POST BREAKAWAY 2 3/16" 10 GA.
M-03	POST, INNER 2 3/16" X 7' 10 GA.
M-04	POST, OUTER 2 1/2" X 14' 10 GA.
M-05	3/8"-16 X 3", GRADE 5 HEX HEAD STEEL BOLTS WITH NUTS (5 EACH)
M-07	ASSEMBLY, BALL BEARING PLATE
M-08	1/2"-13 X 3" STAINLESS STEEL HEX HEAD BOLTS WITH NUTS & WASHERS
M-11	5/16"-18 GRADE 5 LARGE CORNER BOLT WITH NUT
M-12	3/8" ALUMINUM DRIVE RIVET (USE WITH TYPE III SIGNS ONLY)
M-13	ASSEMBLY, SQUARE POST BREAKAWAY 2 1/4" X 36", 12 GA. FOR CONCRETE INSTALLATION

NOTES:

1. REFER TO THE WIND-LOAD CHARTS (SHEET 11 of 11) FOR APPROPRIATE SIGN POST INSTALLATION.
2. THE ANCHOR M-01 IS USED FOR SOIL AND THE M-13 IS FOR CONCRETE INSTALLATION.
3. M-12 RIVETS ARE USED FOR TYPE III SIGNS ONLY. REFER TO INSTALLATION INSTRUCTIONS (SHEET 9 OF 11)
4. MATERIALS USED FOR THE SINGLE POST INSTALLATION WILL BE INCREASED ACCORDING TO THE NUMBER OF POST REQUIRED FOR PROPER SIGN PLACEMENT.

PW:DOC/RD/TS/TYP/SIGNS/SIGN SUP/viii205e.dgn 12/16/05

10/17/05 PLAN DATE	VIII-205E	SHEET 2 of 11

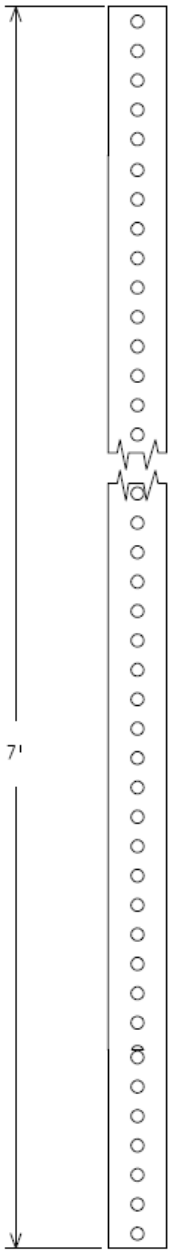

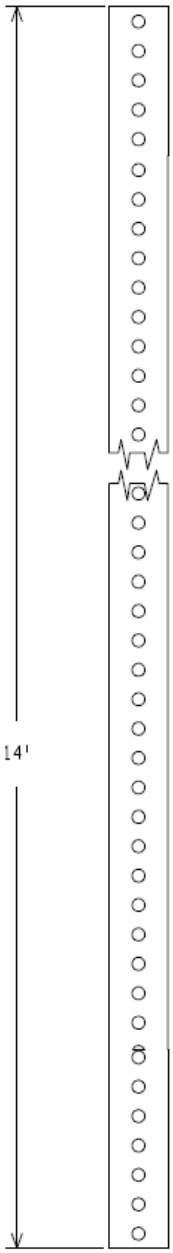

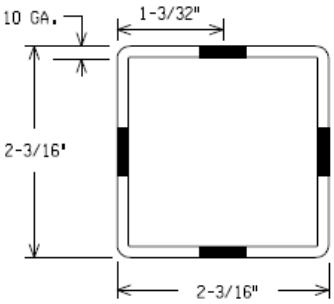

INNER POST, M-03

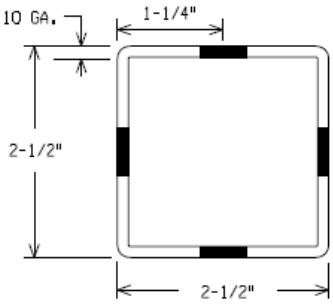

OUTER POST, M-04

PW:DOC/RD/TS/TYP/SIGNS/SIGN SUP/viii205e.dgn 12/16/05

10/17/05 PLAN DATE	VIII-205E	SHEET 3 of 11

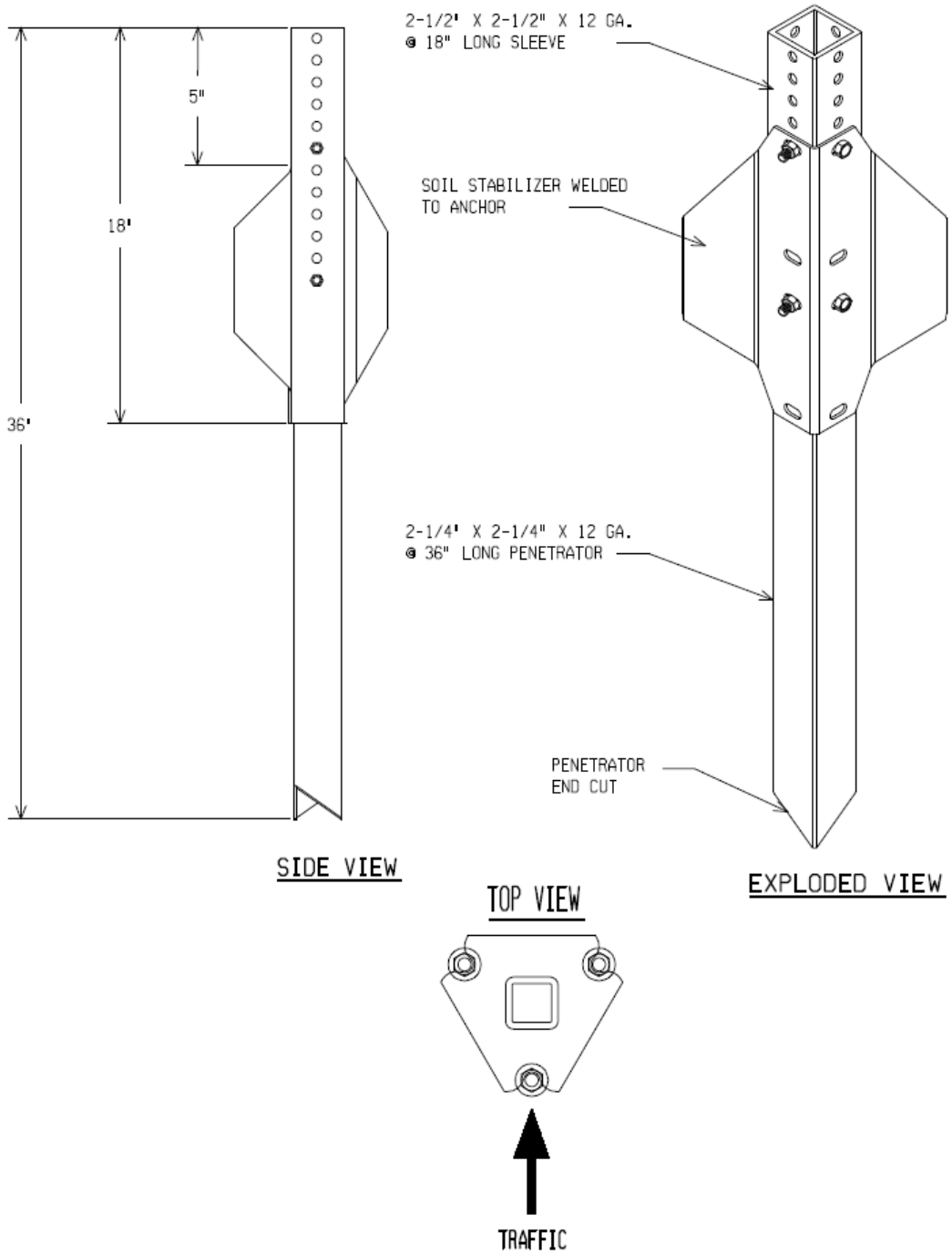

WINGED ANCHOR ASSEMBLY FOR SOIL INSTALLATION, M-01

PW:DOC/RD/TS/TYP/SIGNS/SIGN SUP/viii205e.dgn 12/16/05

10/17/05 PLAN DATE	VIII-205E	SHEET 4 of 11

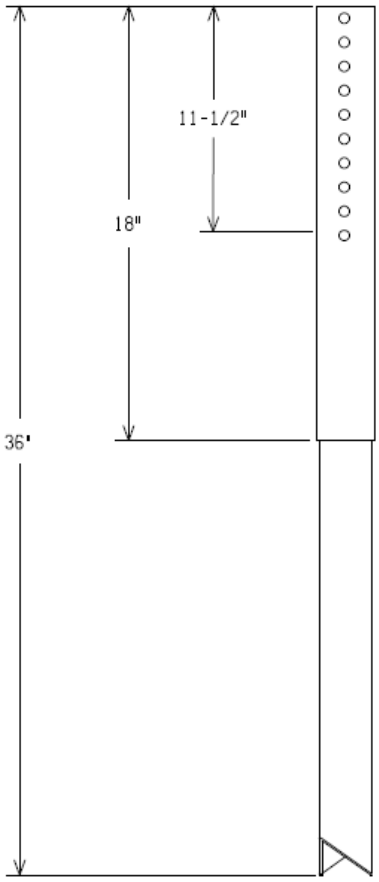

SIDE VIEW

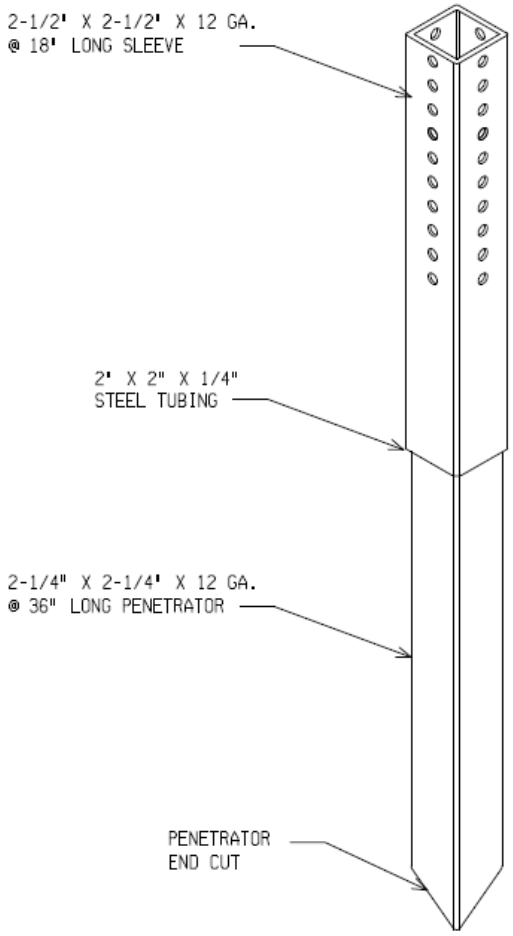

EXPLODED VIEW

TOP VIEW

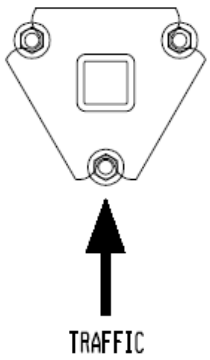

SQUARE POST BREAKAWAY ASSEMBLY FOR CONCRETE INSTALLATION, M-13

PW:DOC/RD/TS/TYP/SIGNS/SIGN SUP/viii205e.dgn 12/16/05	10/17/05 PLAN DATE	VIII-205E	SHEET 5 of 11

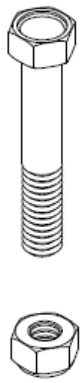

M-05

(5) 3/8"-16 X 3" GRADE 5 HEX HEAD STEEL BOLT
(5) 3/8"-16 HEX STEEL NUT

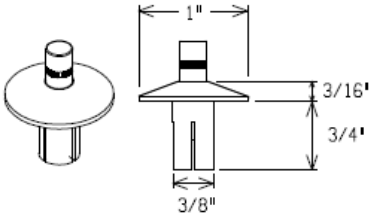

M-12

3/8" ALUMINUM DRIVE RIVET
SEE (SHEET 9 OF 11)

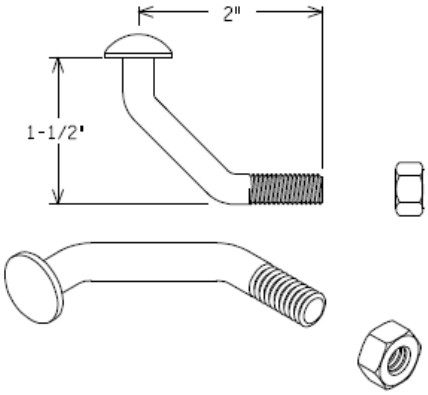

M-11

(1) 5/16"-18 GRADE 5 LARGE CORNER STEEL BOLT
(1) 5/16"-18 HEX STEEL NUT

PW:DOC/RD/TS/TYP/SIGNS/SIGN SUP/viii205e.dgn 12/16/05

10/17/05 PLAN DATE	VIII-205E	SHEET 6 of 11

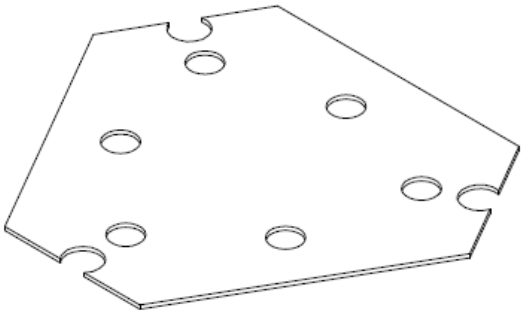

1/16" THICK EQUILATERAL GASKET

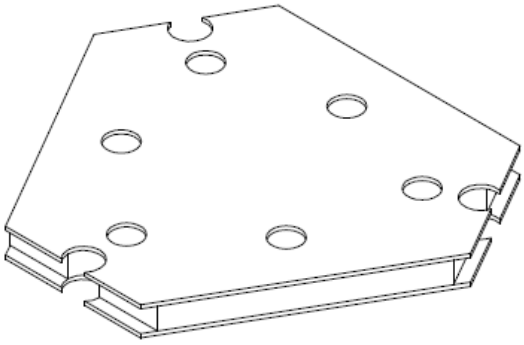

M-07

BALL BEARING PLATE ASSEMBLY

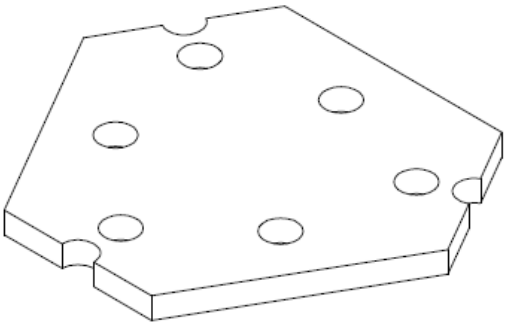

3/8" THICK EQUILATERAL GASKET

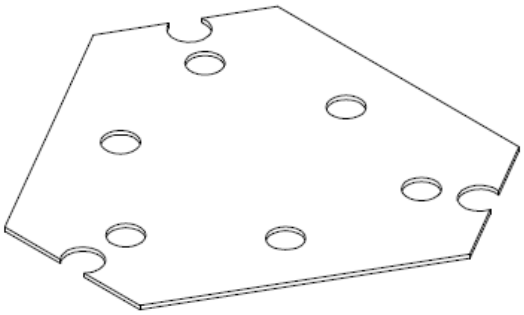

1/16" THICK EQUILATERAL GASKET

(6) 7/16" STAINLESS STEEL BALL BEARING

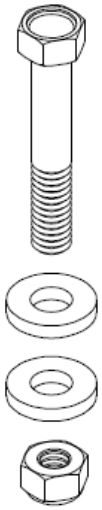

M-08

(3) 1/2"-13 X 3" HEX HEAD STAINLESS STEEL BOLT
(3) 1/2"-13 HEX NY-LOCK STAINLESS STEEL NUT
(6) 1/2" X 1/8" HEAVY DUTY STEEL FLAT WASHER

PW:DOC/RD/TS/TYP/SIGNS/SIGN SUP/viii205e.dgn 12/16/05

10/17/05 PLAN DATE	VIII-205E	SHEET 7 of 11

INSTALLATION CHECKLIST

- ☐ 1. Install the appropriate Anchor assembly (A) into the ground and align with the traffic flow (see Figure 1).
  - ☐ A) For concrete installation(required in weak soil), a 32" deep and 8" minimum diameter hole is required for concrete footings.
  - ☐ B) For standard soil installation, attach soil stabilizer (B) to the Anchor (A) and fastened with two 3/8" corner bolts (M-11) and two 3/8" nuts (M-11a) through the 7th and 12th hole from the top of anchor (as shown).
- ☐ 2. Install Anchor assembly allowing only two holes above grade.
- ☐ 3. Slide 6" stub (C) of Breakaway Assembly into Anchor assembly having the bolt location align with traffic flow(see Figure 1) and fasten with two 3/8" X 3" bolts (M-05) and nuts (M-05a).
- ☐ 4. If Breakaway Assembly is pre-assembled, proceed to step 14.
- ☐ 5. Place the ball bearing assembly (M-07) on the 6" stub (C).
- ☐ 6. Place the 18' stub (F) on top of the ball bearing (E) with the 3 hole side of (F) facing oncoming traffic.
- ☐ 7. Align the 18" stub (F), the ball bearing (M-07) and the 6" stub (C).
- ☐ 8. Slide each flat washer (M-08b) on each of the three inverted 1/2" X 3" stainless steel bolts (M-08).
- ☐ 8. Insert above bolt (M-08) with flat washer (M-08b) up through notched hole of assembly (C), (M-07) and (F).
- ☐ 10. Place the second flat washer (M-08b) down on to the above bolts (M-08).
- ☐ 11. Complete by fastening the stainless steel ny-lock nut (M-08a) to the stainless steel bolt (M-08) and tighten snugly down against the top flat washer (M-08b).
- ☐ 12. Repeat step 9, 10 & 11 on the two remaining notched holes of the triangular points.
- ☐ 13. After fastening all hardware, torque the three 1/2" stainless steel ny-lock nuts (M-08a) in a circular pattern to 40 ft-lbs maximum.
- ☐ 14. Slide appropriate upright post assembly (H), (refer to the allowable Sign Area per post/Windload charts), on the 18" stub (F) of Breakaway Assembly and fasten with three 3/8" X 3" bolts (M-05) and nuts (M-05a).

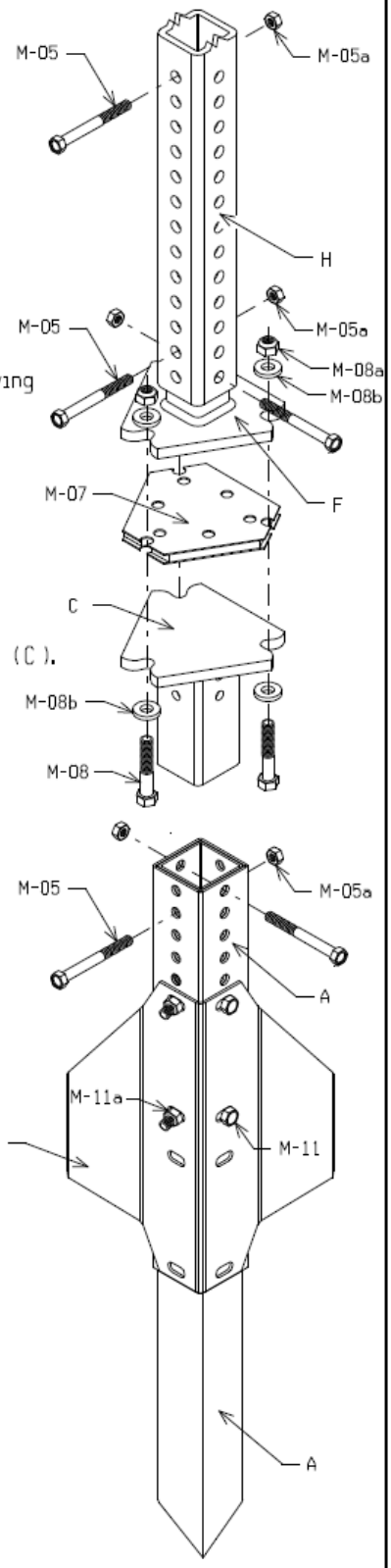

FIGURE 1

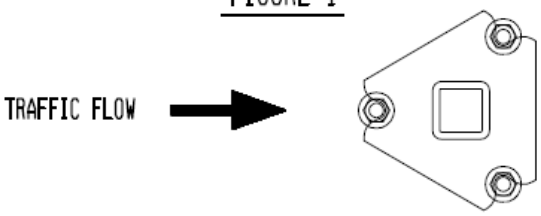

PW:DOC/RD/TS/TYP/SIGNS/SIGN SUP/viii205e.dgn 12/16/05

10/17/05 PLAN DATE	VIII-205E	SHEET 8 of 11

INSTALLATION INSTRUCTIONS

1. Check with utility companies to mark anchor and post location.
2. Orientate anchor for correct sign placement (see Figure 1, sheet 8 of 11)
3. Use drive cap to install anchor half way, check for plumb.
4. Continue to install anchor until two holes are remaining above surface level.
5. Remove drive cap.
6. Install sign on post using MDOT approved hardware for TYPE II signs and aluminum rivets for TYPE III signs.
7. Insert post with sign into anchor six holes deep.
8. See SIGN-100 and SIGN-120 for appropriate bottom height.
9. Use corner bolt to fasten anchor and post.
10. Following these procedures the post and anchor will be installed according NCHRP 350.

PUNCHED SQUARE TUBE SIGN BREAKAWAY SYSTEM SPECIFICATIONS

The breakaway system is designed to allow a traffic sign to breakaway near ground level upon impact by a vehicle. The breakaway system conforms to NCHRP 350 standards for breakaway sign supports.

Basic Types: Triangular, three bolt base.

Basic Components: Top coupling, middle ball bearing retainer, bottom coupling, and clamping bolts including nuts and flat washers.

1. Top coupling consists of a 1-1/2" square steel tube (12 GA. wall @ 18-1/4" long) welded to a 5/8" triangular steel plate.
2. Bottom coupling consists of a 2" square steel tube (1/4" wall @ 6" long) welded to a 5/8" triangular steel plate.
3. The top and bottom steel tubing are structural ASTM A500 Grade B with a minimum yield strength of 46,000 psi.
4. The top and bottom 5/8" thick triangular steel plates are structural ASTM A572 Grade 50 with a minimum yield strength of 50,000 psi.
5. Both top and bottom couplings are hot-dip galvanized (Zinc coated) finished.
6. Top and bottom triangular steel plates have a bolt circle diameter of 5-29/32".
7. Middle ball bearing retainer thickness: 1/2" maximum. Ball bearings are stainless steel and 7/32" diameter.
8. Clamping bolt type: 316 stainless steel with dry lubricant.
9. Clamping bolt size: 1/2" diameter and 3" in length.
10. Steel nuts are 1/2" stainless steel Ny-lock nut.
11. Flat washers are 3/16" thick, 17/32" ID, 1-1/8" OD.
12. Clamping bolt torque: 40 lbs-ft maximum.
13. No scheduled retorque is required.
14. Periodic inspection is recommended.

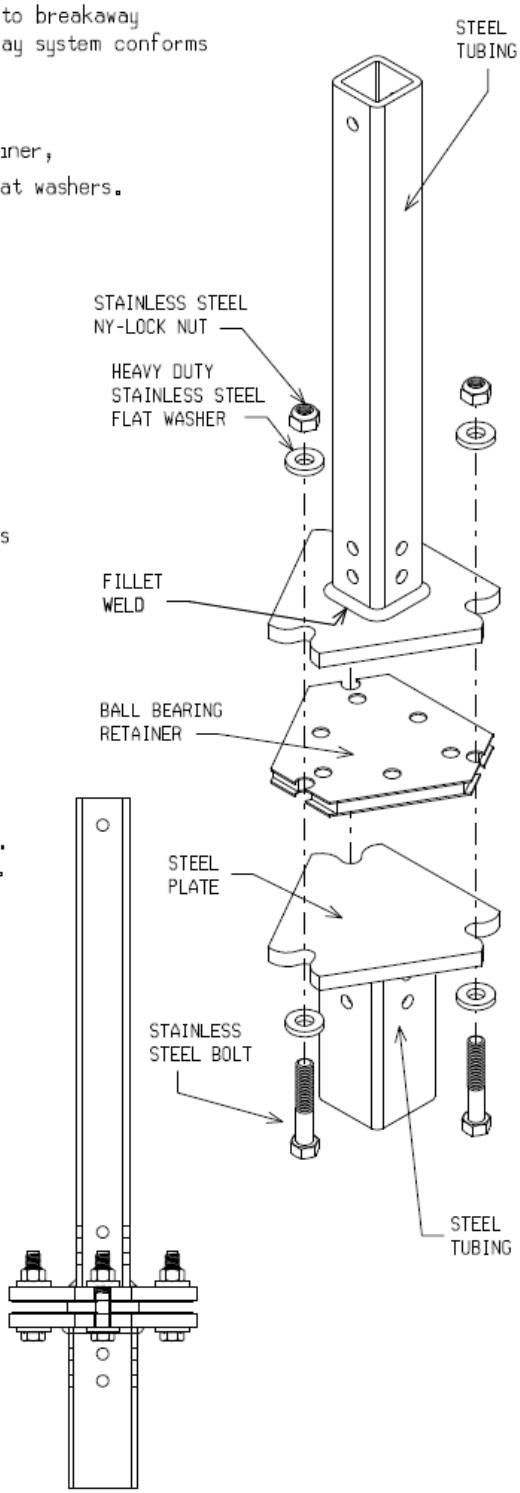

PW:DOC/RD/TS/TYP/SIGNS/SIGN SUP/viii205e.dgn 12/16/05

10/17/05 PLAN DATE	VIII-205E	SHEET 10 of 11

PUNCHED SQUARE TUBE SIGN BREAKAWAY SYSTEM FOR 90 MPH WIND SPEED

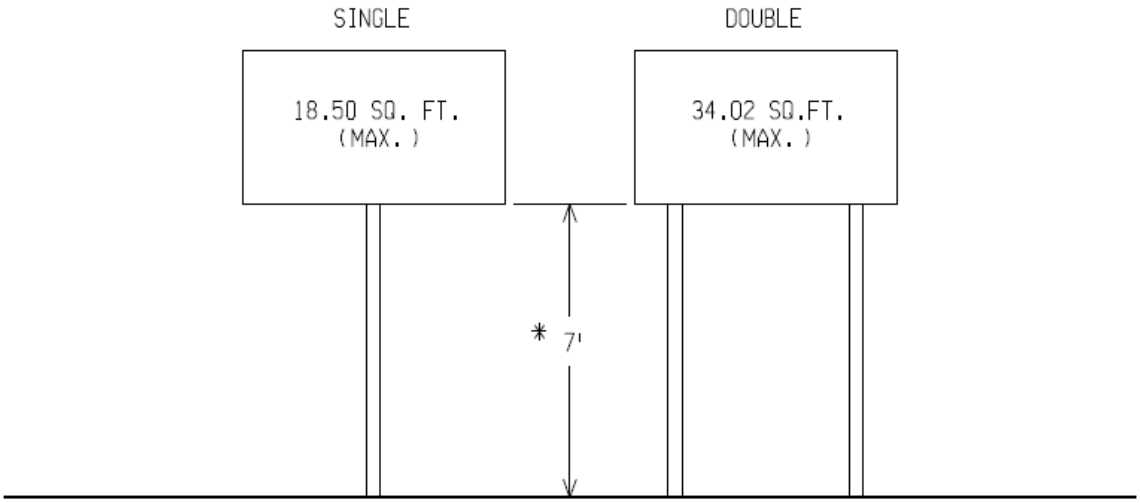

* THE BOTTOM HEIGHT IS DEFINED AS HEIGHT FROM THE NEAR EDGE OF THE TRAVEL LANE PAVEMENT TO THE BOTTOM OF THE SIGN PANEL. SEE SIGN-100 AND SIGN-120 FOR REQUIRED MINIMUM BOTTOM HEIGHTS.

MICHIGAN
DEPARTMENT OF TRANSPORTATION

SPECIAL PROVISION
FOR
PUNCHED SQUARE TUBE SIGN BREAKAWAY SYSTEM

T&S:AU 1 of 1 C&T:APPR:BRZ:JKG:12-29-05

a. Description. Construct Punched Square Tube Sign Breakaway System at the specified location. Complete this work according to the Standard Specifications for Construction and Standard Plan VIII-205E Series.

b. Materials. Provide the materials and hardware as detailed in Standard Plan VIII-205E Series.

c. Construction. Construction for the Punched Square Tube Sign Breakaway System shall conform to Section 810 of the Standard Specifications for Construction and Standard Plan VIII-205E Series.

d. Measurement and Payment. The completed work as described will be paid for at the contract unit price for the following contract item (pay item):

Contract Item (Pay Item)	**Pay Unit**
Punched Square Tube Sign Breakaway System	Each

Punched Square Tube Sign Breakaway System will be measured by each. Payment includes all labor, materials, and equipment required to furnish the item.

ITEM LISTING/PRICING PAGE

Item No.	Est. 3 Year Quantity*	Unit	NIGP Code	Description	Unit Price	Total Price
001	900	Each	801-30-49	**POSTS, SIGN, BREAKAWAY, UPRIGHT** WINGED ANCHOR ASSEMBLY 2 1/4" X 36" - 2 1/2" X 18" FOR SOIL INSTALLATION FOR PUNCHED SQUARE TUBE BREAKAWAY SYSTEM. IN COMPLIANCE WITH MDOT STANDARD PLAN VIII-205E AND MDOT SPECIAL PROVISION FOR PUNCHED SQUARE TUBE SIGN BREAKAWAY SYSTEM ATTACHED. MICHIGAN PART NUMBER: M-01 Name of Manufacturer: Ulti-Mate Hwy. Products Location (City/State): Stanton, CA Name of Distributor: Carrier & Gable, Inc. Location (City/State): Farmington Hills, MI	$46.10	$41,490.00
002	1,050	Each	801-30-49	**POSTS, SIGN, BREAKAWAY, UPRIGHT** SQUARE POST BREAKAWAY ASSEMBLY 2 3/16", 10 GAUGE FOR PUNCHED SQUARE TUBE BREAKAWAY SYSTEM. IN COMPLIANCE WITH MDOT STANDARD PLAN VIII-205E AND MDOT SPECIAL PROVISION FOR PUNCHED SQUARE TUBE SIGN BREAKAWAY SYSTEM ATTACHED. MICHIGAN PART NUMBER: M-02 Name of Manufacturer: Ulti-Mate Hwy. Products Location (City/State): Stanton, CA Name of Distributor: Carrier & Gable, Inc. Location (City/State): Farmington Hills, MI	$132.35	$138,967.50

ITEM LISTING/PRICING PAGE (Continued)

Item No.	Est. 3 Year Quantity*	Unit	NIGP Code	Description	Unit Price	Total Price
003	750	Each	801-30-49	**POSTS, SIGN, BREAKAWAY, UPRIGHT** POST, INNER 2 3/16" X 7' 10 GAUGE FOR THE PUNCHED SQUARE TUBE BREAKAWAY SYSTEM. IN COMPLIANCE WITH MDOT STANDARD PLAN VIII-205E AND MDOT SPECIAL PROVISION FOR PUNCHED SQUARE TUBE SIGN BREAKAWAY SYSTEM ATTACHED. MICHIGAN PART NUMBER: M-03 Name of Manufacturer: Ulti-Mate Hwy. Products Location (City/State): Stanton, CA Name of Distributor: Carrier & Gable, Inc. Location (City/State): Farmington Hills, MI	$44.95	$33,712.50
004	750	Each	801-30-49	**POSTS, SIGN, BREAKAWAY, UPRIGHT** POST, OUTER 2 1/2" X 14' 10 GAUGE FOR THE PUNCHED SQUARE TUBE BREAKAWAY SYSTEM. IN COMPLIANCE WITH MDOT STANDARD PLAN VIII-205E AND MDOT SPECIAL PROVISION FOR PUNCHED SQUARE TUBE SIGN BREAKAWAY SYSTEM ATTACHED. MICHIGAN PART NUMBER: M-04 Name of Manufacturer: Ulti-Mate Hwy. Products Location (City/State): Stanton, CA Name of Distributor: Carrier & Gable, Inc. Location (City/State): Farmington Hills, MI	$105.15	$78,862.50

ITEM LISTING/PRICING PAGE (Continued)

Item No.	Est. 3 Year Quantity*	Unit	NIGP Code	Description	Unit Price	Total Price
005	1,200	Each	320-20	**BOLTS, STEEL** 3/8" - 16 X 3" GRADE 5 HEX HEAD STEEL BOLTS WITH NUTS (5 EACH) FOR THE PUNCHED SQUARE TUBE BREAKAWAY SYSTEM. IN COMPLIANCE WITH MDOT STANDARD PLAN VIII-205E AND MDOT SPECIAL PROVISION FOR PUNCHED SQUARE TUBE SIGN BREAKAWAY SYSTEM ATTACHED. MICHIGAN PART NUMBER: M-05 Name of Manufacturer: Ulti-Mate Hwy. Products Location (City/State): Stanton, CA Name of Distributor: Carrier & Gable, Inc. Location (City/State): Farmington Hills, MI	$.55	$660.00
006	300	Each	320-20	**BOLTS, STEEL** BALL BEARING PLATE ASSEMBLY FOR THE PUNCHED SQUARE TUBE BREAKAWAY SYSTEM. IN COMPLIANCE WITH MDOT STANDARD PLAN VIII-205E AND MDOT SPECIAL PROVISION FOR PUNCHED SQUARE TUBE SIGN BREAKAWAY SYSTEM ATTACHED. MICHIGAN PART NUMBER: M-07 Name of Manufacturer: Ulti-Mate Hwy. Products Location (City/State): Stanton, CA Name of Distributor: Carrier & Gable, Inc. Location (City/State): Farmington Hills, MI	$30.70	$9,210.00

ITEM LISTING/PRICING PAGE (Continued)

Item No.	Est. 3 Year Quantity*	Unit	NIGP Code	Description	Unit Price	Total Price
007	750	Each	320-20	**BOLTS, STEEL** 1/2" - 13 X 3" STAINLESS STEEL HEX HEAD BOLTS WITH NUTS AND WASHERS FOR THE PUNCHED SQUARE TUBE BREAKAWAY SYSTEM. IN COMPLIANCE WITH MDOT STANDARD PLAN VIII-205E AND MDOT SPECIAL PROVISION FOR PUNCHED SQUARE TUBE SIGN BREAKAWAY SYSTEM ATTACHED. MICHIGAN PART NUMBER: M-08 Name of Manufacturer: Ulti-Mate Hwy. Products Location (City/State): Stanton, CA Name of Distributor: Carrier & Gable, Inc. Location (City/State): Farmington Hills, MI	$9.25	$6,937.50
				TOTAL ESTIMATED CONTRACT VALUE:		**$309,840.00**

*Individual quantities estimated based upon prior purchases and not guaranteed.

The terms and conditions require **no minimum order**.

Persons responsible for administering this Contract.

NAME: Merv Teague

TITLE: Sales Representative

PHONE: (248) 477-8700

FAX: (248) 473-0730

E-MAIL: mervteague@carriergable.com

Name: Joe Rodes

TITLE: Operations Manager

PHONE: (248) 477-8700

FAX: (248) 473-0730

E-MAIL: joerodes@carriergable.com