Form No. DMB 234A (Rev. 1/96)
AUTHORITY: Act 431 of 1984
COMPLETION: Required
PENALTY: Failure to deliver in accordance with Contract terms and conditions and this notice may be considered in default of Contract

**STATE OF MICHIGAN**
**DEPARTMENT OF MANAGEMENT AND BUDGET**
**PURCHASING OPERATIONS**
**P.O. BOX 30026, LANSING, MI 48909**
**OR**
**530 W. ALLEGAN, LANSING, MI 48933**

**January 26, 2010**

# CHANGE NOTICE NO. 2
# TO
# CONTRACT NO. 071B8200062

## between
## THE STATE OF MICHIGAN
## and

| | |
|---|---|
| NAME & ADDRESS OF CONTRACTOR<br><br>**Quantum Construction Company**<br>**2767 Blue Star Hwy.**<br>**Douglas, MI 49406**<br>**Quantumconstruction@comcast.net** | TELEPHONE (269) 857-3027<br>**Edward Plockmeyer**<br>VENDOR NUMBER/MAIL CODE<br><br>BUYER/CA (517) 241-1916<br>**Jim Wilson** |
| Contract Compliance Inspector: Maria Albright, (269) 673-2430, Albrightm@michigan.gov<br>**Department of Natural Resources – Allegan State Game Area – Wildlife Habitiat Improvement Project** | |
| CONTRACT PERIOD: From: **December 5, 2007** To: **November 30, 2010** | |
| TERMS<br>**Net 45 Days** | SHIPMENT<br>**N/A** |
| F.O.B.<br>**N/A** | SHIPPED FROM<br>**N/A** |
| MINIMUM DELIVERY REQUIREMENTS<br>**N/A** | |

**NATURE OF CHANGE (S):**

**Effective January 26, 2010 this Contract is hereby INCREASED $9.00 to correct the total amount from the original Contract. NOTE: The DMB Buyer for this Contract is hereby CHANGED to Jim Wilson (517) 241-1916.**

**All other terms, conditions, specifications, and pricing remain unchanged.**

**AUTHORITY/REASON:**

**Per e-mail request from agency (J. Harding-Bishop) dated 1/20/10 and DMB/Purchasing Operations' approval.**

**REVISED CURRENT AUTHORIZED SPEND LIMIT: $119,047.00**

Form No. DMB 234A (Rev. 1/96)
AUTHORITY: Act 431 of 1984
COMPLETION: Required
PENALTY: Failure to deliver in accordance with Contract terms and conditions and this notice may be considered in default of Contract

**STATE OF MICHIGAN**
**DEPARTMENT OF MANAGEMENT AND BUDGET**
**PURCHASING OPERATIONS**
**P.O. BOX 30026, LANSING, MI 48909**
**OR**
**530 W. ALLEGAN, LANSING, MI 48933**

**December 20, 2007**

# CHANGE NOTICE NO. 1
# TO
# CONTRACT NO. 071B8200062

## between
## THE STATE OF MICHIGAN
## and

| | |
|---|---|
| NAME & ADDRESS OF CONTRACTOR<br>**Quantum Construction Company**<br>**2767 Blue Star Hwy.**<br>**Douglas, MI 49406**<br>**Quantumconstruction@comcast.net** | TELEPHONE (269) 857-3027<br>**Edward Plockmeyer**<br>VENDOR NUMBER/MAIL CODE<br>BUYER/CA (517) 241-0684<br>**Erica Busick** |
| Contract Compliance Inspector: Maria Albright, (269) 673-2430, Albrightm@michigan.gov<br>**Department of Natural Resources – Allegan State Game Area – Wildlife Habitiat Improvement Project** | |
| CONTRACT PERIOD: From: **December 5, 2007** To: **November 30, 2010** | |
| TERMS<br>**Net 45 Days** | SHIPMENT<br>**N/A** |
| F.O.B.<br>**N/A** | SHIPPED FROM<br>**N/A** |
| MINIMUM DELIVERY REQUIREMENTS<br>**N/A** | |

**NATURE OF CHANGE (S):**

**Effective December 20, 2007, the following information is hereby incorporated into this Contract:**

**Quantum Construction Company was awarded the following locations at the following prices:**

**Location #01 – $8,208.00**
**Location #02 - $2,232.00**
**Location #03 – 3,354.00**
**Location #05 - $2,193.00**
**Location #06 - $3,942.00**
**Location #07 - $11,704.00**
**Location #08 - $34,560.00**
**Location #09 - $3,393.00**
**Location #10 - $5,148.00**
**Location #11 - $7,906.00**
**Location #12 – 10,302.00**
**Location #13 - $4,365.00**
**Location #14 - $2,241.00**
**Location #15 - $8,091.00**
**Location #16 - $11,408.00**

**All other terms, conditions and specifications shall remain the same.**

**TOTAL ESTIMATED CONTRACT VALUE: $119,038.00**

Form No. DMB 234 (Rev. 1/96)
AUTHORITY: Act 431 of 1984
COMPLETION: Required
PENALTY: Contract will not be executed unless form is filed

**STATE OF MICHIGAN**
**DEPARTMENT OF MANAGEMENT AND BUDGET**
**PURCHASING OPERATIONS**
**P.O. BOX 30026, LANSING, MI 48909**
**OR**
**530 W. ALLEGAN, LANSING, MI 48933**

**December 17, 2007**

# NOTICE
# TO
# CONTRACT NO. 071B8200062
# between
# THE STATE OF MICHIGAN
# and

| | |
|---|---|
| NAME & ADDRESS OF VENDOR<br><br>**Quantum Construction Company**<br>**2767 Blue Star Hwy.**<br>**Douglas, MI 49406**<br>**Quantumconstruction@comcast.net** | TELEPHONE (269) 857-3027<br>**Edward Plockmeyer**<br>VENDOR NUMBER/MAIL CODE<br><br>BUYER/CA (517) 241-0684<br>**Erica Busick** |
| Contract Compliance Inspector: Maria Albright, (269) 673-2430 Jana Harding, (517) 373-1190<br>**Department of Natural Resources – Allegan State Game Area – Wildlife Habitat Improvement Project** | |
| CONTRACT PERIOD: From: **December 5, 2007** To: **November 30, 2010** | |
| TERMS<br>**Net 45 days** | SHIPMENT<br>**N/A** |
| F.O.B.<br>**N/A** | SHIPPED FROM<br>**N/A** |
| MINIMUM DELIVERY REQUIREMENTS<br>**N/A** | |

**The terms and conditions of this Contract are those of ITB #0718200011, this Contract Agreement and the vendor's quote dated October 23, 2007. In the event of any conflicts between the specifications, and terms and conditions, indicated by the State and those indicated by the vendor, those of the State take precedence.**

**Estimated Contract Value: $119,038.00**

Form No. DMB 234 (Rev. 1/96)
AUTHORITY: Act 431 of 1984
COMPLETION: Required
PENALTY: Contract will not be executed unless form is filed

**STATE OF MICHIGAN**
**DEPARTMENT OF MANAGEMENT AND BUDGET**
**PURCHASING OPERATIONS**
**P.O. BOX 30026, LANSING, MI 48909**
**OR**
**530 W. ALLEGAN, LANSING, MI 48933**

# CONTRACT NO. 071B8200062
## between
## THE STATE OF MICHIGAN
## and

| | |
|---|---|
| NAME & ADDRESS OF VENDOR<br><br>**Quantum Construction Company**<br>**2767 Blue Star Hwy.**<br>**Douglas, MI 49406**<br>**Quantumconstruction@comcast.net** | TELEPHONE (269) 857-3027<br>**Edward Plockmeyer**<br>VENDOR NUMBER/MAIL CODE<br><br>BUYER/CA (517) 241-0684<br>**Erica Busick** |
| Contract Compliance Inspector: Maria Albright, (269) 673-2430 Jana Harding, (517) 373-1190<br>**Department of Natural Resources – Allegan State Game Area – Wildlife Habitat Improvement Project** | |
| CONTRACT PERIOD: From: **December 5, 2007** To: **November 30, 2010** | |
| TERMS<br>**Net 45 days** | SHIPMENT<br>**N/A** |
| F.O.B.<br>**N/A** | SHIPPED FROM<br>**N/A** |
| MINIMUM DELIVERY REQUIREMENTS<br>**N/A** | |
| MISCELLANEOUS INFORMATION:<br><br>**The terms and conditions of this Contract are those of ITB #0718200011, this Contract Agreement and the vendor's quote dated October 23, 2007. In the event of any conflicts between the specifications, and terms and conditions, indicated by the State and those indicated by the vendor, those of the State take precedence.**<br><br>**Estimated Contract Value: $119,038.00** | |

**THIS IS NOT AN ORDER: This Contract Agreement is awarded on the basis of our inquiry bearing the ITB No. 071I8200011. Orders for delivery may be issued directly by the Department of Natural Resources through the issuance of a Purchase Order Form.**

**All terms and conditions of the invitation to bid are made a part hereof.**

| **FOR THE VENDOR:** | **FOR THE STATE:** |
|---|---|
| **Quantum Construction Company**<br>Firm Name | Signature |
| Authorized Agent Signature | **William C. Walsh, CPPB, Buyer Manager**<br>Name/Title |
| Authorized Agent (Print or Type) | **Services Division, Purchasing Operations**<br>Division |
| Date | Date |

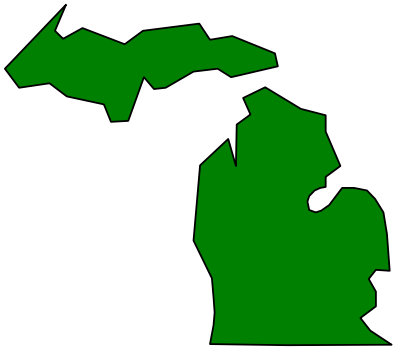

**STATE OF MICHIGAN**
**Department of Management and Budget**
**Purchasing Operations**

CONTRACT NO. 071B8200062
Savanna Restoration at Allegan State Game Area

Buyer Name: Erica Busick
Telephone Number: 517-241-0684
E-Mail Address: Busicke@michigan.gov

Allegan State Game Area
4590 118th Avenue
Allegan, MI

**Awarded To**:
Quantum Construction
2767 Blue Star Hwy.
Douglas, MI 49406

## Table of Contents


Article 1 - Statement of Work (SOW) ..... 7
**1.000 Project Identification** ..... 7
1.001 PROJECT REQUEST ..... 7
1.002 BACKGROUND ..... 7
**1.110 Scope of Work and Deliverables** ..... 7
1.101 IN SCOPE ..... 7
1.102 OUT OF SCOPE ..... 7
1.103 ENVIRONMENT ..... 8
1.104 WORK AND DELIVERABLE ..... 8
**1.200 Roles and Responsibilities** ..... 11
1.201 CONTRACTOR STAFF, ROLES, AND RESPONSIBILITIES ..... 11
1.202 STATE STAFF, ROLES, AND RESPONSIBILITIES ..... 11
1.203 OTHER ROLES AND RESPONSIBILITIES – Reserved ..... 12
**1.300 Project Plan** ..... 12
1.301 PROJECT PLAN MANAGEMENT ..... 12
1.302 REPORTS ..... 12
**1.400 Project Management** ..... 12
1.401 ISSUE MANAGEMENT ..... 12
1.402 RISK MANAGEMENT ..... 13
1.403 CHANGE MANAGEMENT ..... 13
**1.500 Acceptance** ..... 13
1.501 CRITERIA ..... 13
1.502 FINAL ACCEPTANCE ..... 13
**1.600 Compensation and Payment** ..... 14
1.601 COMPENSATION AND PAYMENT ..... 14
**1.700 Additional Terms and Conditions Specific to this SOW** ..... 14
1.701 ADDITIONAL TERMS AND CONDITIONS SPECIFIC TO THIS SOW – RESERVED ..... 14
1B.303 MIDEAL - EXTENDED PURCHASING (SEE ARTICLE 2, SECTION 2.320) - N/A**Error! Bookmark not defined.**
Article 1, Attachment A – Reserved ..... 15
Article 1, Attachment B-Reserved ..... 16
Article 1, Attachment C - Reserved ..... 17
Article 1, Attachment D- Reserved ..... 18
Article 1, Attachment E ..... 19
Project Work Plan ..... 19
Article 1, Attachment F ..... 20
Article 2 – General Terms and Conditions ..... 23
**2.010 Contract Structure and Administration** ..... 23
2.011 Definitions ..... 23
2.012 Attachments and Exhibits ..... 23
2.013 Statements of Work ..... 23
2.014 Issuing Office ..... 24
2.015 Contract Compliance Inspector ..... 24
**2.020 Contract Objectives/Scope/Background** ..... 25
2.021 Background ..... 25
2.022 Purpose ..... 25
2.23 Objectives and Scope ..... 25
2.024 Interpretation ..... 25
2.025 Form, Function and Utility ..... 25
**2.030 Legal Effect and Term** ..... 25
2.031 Legal Effect ..... 25
2.032 Contract Term ..... 26
2.033 Renewal(s) ..... 26

**2.040 Contractor Personnel** ..... 26
2.041 Contractor Personnel ..... 26
2.042 Contractor Identification ..... 28
2.043 Cooperation with Third Parties ..... 28
2.044 Subcontracting by Contractor ..... 28
2.045 Contractor Responsibility for Personnel ..... 29
**2.050 State Standards** ..... 29
2.051 Existing Technology Standards - Reserved ..... 29
2.052 PM Methodology Standards – Reserved ..... 29
2.053 Adherence to Portal Technology Tools - Reserved ..... 29
2.054 Acceptable Use Policy – Reserved ..... 29
**2.060 Deliverables** ..... 29
2.061 Ordering ..... 29
2.062 Software – Reserved ..... 29
2.063 Hardware – Reserved ..... 29
2.064 Equipment to be New and Prohibited Products – Reserved ..... 29
**2.070 Performance** ..... 29
2.071 Performance, In General ..... 29
2.072 Time of Performance ..... 29
2.073 Liquidated Damages – Reserved ..... 30
2.074 Bankruptcy ..... 30
2.075 Time is of the Essence ..... 30
**2.080 Delivery and Acceptance of Deliverables** ..... 30
2.081 Delivery Responsibilities - Reserved ..... 30
2.082 Delivery of Deliverables – Reserved ..... 30
2.083 Testing – Reserved ..... 30
2.084 Approval of Deliverables, In General ..... 30
2.085 Process For Approval of Written Deliverables - Reserved ..... 31
2.086 Process for Approval of Services ..... 31
2.087 Process for Approval of Physical Deliverables – Reserved ..... 31
2.088 Final Acceptance ..... 31
**2.080 Delivery and Acceptance of Deliverables** ..... 32
2.081 Delivery of Deliverables – Reserved ..... 32
2.082 Contractor System Testing –Reserved ..... 32
2.083 Approval of Deliverables, In General – Reserved ..... 32
2.084 Process for Approval of Written Deliverables – Reserved ..... 32
2.085 Process for Approval of Custom Software Deliverables – Reserved ..... 32
2.086 Final Acceptance ..... 32
**2.090 Financial** ..... 32
2.091 Pricing ..... 32
2.092 Invoicing and Payment Procedures and Terms ..... 32
2.093 State Funding Obligation ..... 33
2.094 Holdback – Reserved ..... 33
2.095 Electronic Payment Availability ..... 34
**2.100 Contract Management** ..... 34
2.101 Contract Management Responsibility ..... 34
2.102 Problem and Contract Management Procedures ..... 34
2.104 System Changes – Reserved ..... 35
2.105 Reserved ..... 35
2.106 Change Requests ..... 35
**2.110 Records and Inspections** ..... 36
2.111 Records and Inspections ..... 36
2.112 Errors ..... 36
**2.120 State Responsibilities** ..... 37
2.121 State Performance Obligations ..... 37
**2.130 Security** ..... 37
2.131 Background Checks ..... 37
**2.140 Reserved** ..... 37

**2.150 Confidentiality** ... 38
2.151 Freedom of Information ... 38
2.152 Confidentiality ... 38
2.153 Protection of Confidential Information ... 38
2.154 Exclusions ... 38
2.155 No Implied Rights ... 38
2.156 Remedies ... 39
2.157 Security Breach Notification ... 39
2.158 Survival ... 39
2.159 Destruction of Confidential Information ... 39
**2.160 Proprietary Rights –** ... 39
2.163 Rights in Data ... 39
2.164 Ownership of Materials ... 40
2.165 Standard Software – Reserved ... 40
2.166 Pre-existing Materials for Custom Software Deliverables – Reserved ... 40
2.167 General Skills ... 40
**2.170 Warranties and Representations** ... 40
2.171 Warranties and Representations ... 40
2.175a DISCLAIMER – Reserved ... 41
2.175b Standard Warranties – Reserved ... 41
2.176 Consequences for Breach – Reserved ... 41
**2.180 Insurance** ... 41
2.181 Liability Insurance ... 41
**2.190 Indemnification** ... 44
2.191 Indemnification ... 44
2.192 Continuation of Indemnification Obligations ... 45
2.193 Indemnification Procedures ... 45
**2.200 Limits of Liability and Excusable Failure** ... 46
2.201 Limits of Liability ... 46
2.202 Excusable Failure ... 46
2.203 Disaster Recovery ... 47
**2.210 Termination/Cancellation by the State** ... 47
2.211 Termination for Cause ... 47
2.212 Termination for Convenience ... 47
2.213 Non-Appropriation ... 48
2.214 Criminal Conviction ... 48
2.216 Rights and Obligations Upon Termination ... 48
2.217 Reservation of Rights ... 49
2.218 Contractor Transition Responsibilities ... 49
2.219 State Transition Responsibilities ... 50
**2.220 Termination by Contractor** ... 50
2.221 Termination by Contractor ... 50
**2.230 Stop Work** ... 50
2.231 Stop Work Orders ... 50
2.232 Cancellation or Expiration of Stop Work Order ... 50
2.233 Allowance of Contractor Costs ... 50
**2.240 Reserved** ... 51
**2.250 Dispute Resolution** ... 51
2.251 In General ... 51
2.252 Informal Dispute Resolution ... 51
2.253 Injunctive Relief ... 51
2.254 Continued Performance ... 51
**2.260 Federal and State Contract Requirements** ... 52
2.261 Nondiscrimination ... 52
2.262 Unfair Labor Practices ... 52
2.263 Workplace Safety and Discriminatory Harassment ... 52

**2.270 Litigation** ..... 52
2.271 Disclosure of Litigation ..... 52
2.272 Governing Law ..... 53
2.273 Compliance with Laws ..... 53
2.274 Jurisdiction ..... 53
**2.280 Environmental Provision** ..... 53
2.281 Environmental Provision ..... 53
**2.290 General** ..... 54
2.291 Amendments ..... 54
2.292 Assignment ..... 54
2.293 Entire Contract; Order of Precedence ..... 55
2.294 Headings ..... 55
2.295 Relationship of the Parties (Independent Contractor Relationship) ..... 55
2.296 Notices ..... 55
2.297 Media Releases and Contract Distribution ..... 56
2.298 Reformation and Severability ..... 56
2.299 Consents and Approvals ..... 56
2.300 No Waiver of Default ..... 56
2.301 Survival ..... 56
2.302 Covenant of Good Faith ..... 56
2.303 Permits ..... 56
2.304 Website Incorporation ..... 56
2.305 Taxes ..... 57
2.306 Prevailing Wage - Reserved ..... 57
2.307 Call Center Disclosure - Reserved ..... 57
2.308 Future Bidding Preclusion ..... 57
**2.310 Reserved** ..... 57
**2.320 Extended Purchasing** ..... 57
2.321 MiDEAL – Reserved ..... 57
**2.330 Federal Grant Requirements** ..... 57
2.331 Federal Grant Requirements ..... 57

## Article 1 – Statement of Work (SOW)

### 1.000 Project Identification

### 1.001 PROJECT REQUEST

The objective of this project is to substantially reduce the presence of woody plants in the designated areas of the Allegan State Game Area to favor the presence of native grassland vegetation. This will be accomplished by mowing and/or applying herbicide to woody plants within the designated treatment zones.

### 1.002 BACKGROUND

The Michigan Department of Natural Resources, Wildlife Division, Allegan State Game Area is seeking bids for control of woody encroachment in Savannas at the Allegan State Game Area in Allegan, Michigan. Approximately 7000 acres of the Game Area is designated to be restored to Savanna/Oak Barrens conditions. This habitat type occurred over a significant portion of the Game Area prior to widespread European settlement. The Savanna/Oak Barrens ecosystem is also critical habitat for numerous species of concern including the federally endangered Karner Blue Butterfly. The general goal of this project is to reduce woody stem density in designated areas to reduce shading of grassland plants by trees and shrubs. This work will be accomplished by mowing, cutting, or hydro axing of woody stems and herbicide application as laid out in this bid. In locations occupied by sensitive species, work must be done with at least four inches of snow cover on the ground.

### 1.110 Scope of Work and Deliverables

### 1.101 IN SCOPE

Work performed under this contract must have Project Manager (PM) approval within 72 hours prior to beginning. The PM will determine if conditions are appropriate for work to be performed, and reserves the right to stop work should conditions become unacceptable for work to continue. The contract will be awarded by site, contractors must work only within the boundaries of each site.

Bidders Response:

A) Prior to beginning any work Quantum Construction Co. will contact the Project Manager within 72 hours prior to beginning the work
B) Quantum Construction Co. will agree to stop work if the Project Manager determines that the site conditions are unacceptable for the work to continue.
C) Quantum Construction Co. agrees that the contract will be awarded by Site. Quantum Construction Co. agrees that the contract is only to work within the boundaries of each site

### 1.102 OUT OF SCOPE

Work performed outside of the time frame set by the PM will be considered out of scope, payment will not be made to the contractor for working outside of time frame. Work done outside the boundaries of a site will be considered out of scope and herbicide treatment done without the use of dye will be considered out of scope. Some dates may be unavailable for work due to special events. The contractor will be notified of any such dates a minimum of two weeks in advance.

Bidders Response:

A) Quantum Construction Co. agrees that work performed outside of the time frame set by the PM will be considered out of scope and further agrees that payment will not be made for this work
B) Quantum Construction Co. agrees that work done outside of the boundaries of the site will be considered out of scope.
C) Quantum Construction Co. agrees that herbicide treatment done without the use of dye will be considered out of scope.
D) Quantum Construction co. agrees that certain dates may be unavailable to work due to special events, and these events will be notified of these dates a minimum of two weeks in advanced.

## 1.103 ENVIRONMENT

Work for this contract will be performed during the winter months when there is at least four (4) inches of snow on the ground. Contractors should expect to work under cold conditions.

## 1.104 WORK AND DELIVERABLE

Contractor shall provide Deliverables/Services and staff, and otherwise do all things necessary for or incidental to the performance of work, as set forth below:

Work shall be performed between October 1 and April 13 of each year, when conditions are right and approval has been granted by the Project Manager.

Removal treatment will consist of mowing, hydro axing, or otherwise cutting all woody stems less than 4" d.b.h. in the designated sites. Herbicide treatment will consist of application of appropriate herbicides to decrease re-sprouting of woody vegetation by the prescribed amount while preventing impact to other herbaceous plant species.

In the following numbered sites woody stem removal treatment must occur when there is at least 4 inches of snow cover on the ground, cutting must be at snow top level.

Sites 1, 2, 3, 5, 6, 7, 8, 9, 10, 11, 12, 13, 14, 15, and 16.

In the following numbered sites herbicide treatment will occur as follows:

Site 17 – Mechanical application during the dormant season

Site 18 – Hand application by sponge or backpack sprayer any time of year

Site 19 – Mechanical application with 4" of snow cover

On Site number 4 woody stem removal must occur when there is at least 4 inches of snow cover on the ground, with herbicide treatment with 48 hours of stem cutting.

Treatment on all sites must be suspended if soil moisture conditions would allow rutting to occur. In cases where the PM requests work be stopped, the Contractor will have 24 hours in which to remove equipment from the site, unless otherwise agreed upon by PM. Payment will not be made for work that occurs outside the designated conditions.

Some dates may be unavailable for work due to special events. The contractor will be notified of any such dates a minimum of two weeks in advance.

**Contractor is required to submit a detailed work plan for each site with their bid submission, including but not limited to the type of equipment to be used on site, the estimated time line to complete the site, and if applicable the type of herbicide they intend to use and the method of application.**

Attachment E lists the number of acres per site, a brief description of the site, as well as the treatments necessary and the percent of work expected to be performed before final acceptance is granted. The percentage listed is either the percent of woody debri expected to be removed from the site, or the percentage of woody debri expected to be treated with herbicide, whichever the site is calling for.

Bidders Response:

A) Site Number 1
   a. Work Plan - Between the dates of October 1 and April 13 with at least 4" of snow on the ground, main areas to be mowed with our Caterpillar 320 Excavator with Seppi Flail Axe Mower and outer edges will be mowed with a combination of our Caterpillar 267 Skid Steer and Chainsaws.
   b. Equipment to be used
      i. Caterpillar 320 Excavator with Seppi Flail Axe Mower
      ii. Caterpillar 267 Track Mounted Skid Steer with Brush Mower
   c. Estimated Time to Complete - 10 Days

B) Site Number 2
   a. Work Plan - Between the dates of October 1 and April 13 with at least 4" of snow on the ground, main areas to be mowed with our Caterpillar 320 Excavator with Seppi Flail Axe Mower and outer edges will be mowed with a combination of our Caterpillar 267 Skid Steer and Chainsaws.
   b. Equipment to be Used
      i. Caterpillar 320 Excavator with Seppi Flail Axe Mower
      ii. Caterpillar 267 Track Mounted Skid Steer with Brush Mower
   c. Estimated Time to Complete - 3 Days

C) Site Number 3
   a. Work Plan - Between the dates of October 1 and April 13 with at least 4" of snow on the ground, main areas to be mowed with our Caterpillar 320 Excavator with Seppi Flail Axe Mower and outer edges will be mowed with a combination of our Caterpillar 267 Skid Steer and Chainsaws.
   b. Equipment to be Used
      i. Caterpillar 320 Excavator with Seppi Flail Axe Mower
      ii. Caterpillar 267 Track Mounted Skid Steer with Brush Mower
   c. Estimated Time to Complete - 4 Days

D) Site Number 5
   a. Work Plan - Between the dates of October 1 and April 13 with at least 4" of snow on the ground, main areas to be mowed with our Caterpillar 320 Excavator with Seppi Flail Axe Mower and outer edges will be mowed with a combination of our Caterpillar 267 Skid Steer and Chainsaws.
   b. Equipment to be Used
      i. Caterpillar 320 Excavator with Seppi Flail Axe Mower
      ii. Caterpillar 267 Track Mounted Skid Steer with Brush Mower
   c. Estimated Time to Complete - 3 Days

E) Site Number 6
   a. Work Plan - Between the dates of October 1 and April 13 with at least 4" of snow on the ground, main areas to be mowed with our Caterpillar 320 Excavator with Seppi Flail Axe Mower and outer edges will be mowed with a combination of our Caterpillar 267 Skid Steer and Chainsaws.
   b. Equipment to be Used
      i. Caterpillar 320 Excavator with Seppi Flail Axe Mower
      ii. Caterpillar 267 Track Mounted Skid Steer with Brush Mower
   c. Estimated Time to Complete - 5 Days

F) Site Number 7
   a. Work Plan - Between the dates of October 1 and April 13 with at least 4" of snow on the ground, main areas to be mowed with our Caterpillar 320 Excavator with Seppi Flail Axe Mower and outer edges will be mowed with a combination of our Caterpillar 267 Skid Steer and Chainsaws.
   b. Equipment to be Used
      i. Caterpillar 320 Excavator with Seppi Flail Axe Mower
      ii. Caterpillar 267 Track Mounted Skid Steer with Brush Mower
   c. Estimated Time to Complete - 13 Days

G) Site Number 8
   a. Work Plan - Between the dates of October 1 and April 13 with at least 4" of snow on the ground, main areas to be mowed with our Caterpillar 320 Excavator with Seppi Flail Axe Mower and outer edges will be mowed with a combination of our Caterpillar 267 Skid Steer and Chainsaws.
   b. Equipment to be Used
      i. Caterpillar 320 Excavator with Seppi Flail Axe Mower
      ii. Caterpillar 267 Track Mounted Skid Steer with Brush Mower
   c. Estimated Time to Complete - 35 Days

H) Site Number 9
   a. Work Plan - Between the dates of October 1 and April 13 with at least 4" of snow on the ground, main areas to be mowed with our Caterpillar 320 Excavator with Seppi Flail Axe Mower and outer edges will be mowed with a combination of our Caterpillar 267 Skid Steer and Chainsaws.
   b. Equipment to be Used
      i. Caterpillar 320 Excavator with Seppi Flail Axe Mower
      ii. Caterpillar 267 Track Mounted Skid Steer with Brush Mower
   c. Estimated Time to Complete - 4 Days

I) Site Number 10
   a. Work Plan - Between the dates of October 1 and April 13 with at least 4" of snow on the ground, main areas to be mowed with our Caterpillar 320 Excavator with Seppi Flail Axe Mower and outer edges will be mowed with a combination of our Caterpillar 267 Skid Steer and Chainsaws.
   b. Equipment to be Used
      i. Caterpillar 320 Excavator with Seppi Flail Axe Mower
      ii. Caterpillar 267 Track Mounted Skid Steer with Brush Mower
   c. Estimated Time to Complete - 6 Days

J) Site Number 11
   a. Work Plan - Between the dates of October 1 and April 13 with at least 4" of snow on the ground, main areas to be mowed with our Caterpillar 320 Excavator with Seppi Flail Axe Mower and outer edges will be mowed with a combination of our Caterpillar 267 Skid Steer and Chainsaws.
   b. Equipment to be Used
      i. Caterpillar 320 Excavator with Seppi Flail Axe Mower
      ii. Caterpillar 267 Track Mounted Skid Steer with Brush Mower
   c. Estimated Time to Complete - 8 Days

K) Site Number 12
   a. Work Plan - Between the dates of October 1 and April 13 with at least 4" of snow on the ground, main areas to be mowed with our Caterpillar 320 Excavator with Seppi Flail Axe Mower and outer edges will be mowed with a combination of our Caterpillar 267 Skid Steer and Chainsaws.
   b. Equipment to be Used
      i. Caterpillar 320 Excavator with Seppi Flail Axe Mower
      ii. Caterpillar 267 Track Mounted Skid Steer with Brush Mower
   c. Estimated Time to Complete - 12 Days

L) Site Number 13
   a. Work Plan - Between the dates of October 1 and April 13 with at least 4" of snow on the ground, main areas to be mowed with our Caterpillar 320 Excavator with Seppi Flail Axe Mower and outer edges will be mowed with a combination of our Caterpillar 267 Skid Steer and Chainsaws.
   b. Equipment to be Used
      i. Caterpillar 320 Excavator with Seppi Flail Axe Mower
      ii. Caterpillar 267 Track Mounted Skid Steer with Brush Mower
   c. Estimated Time to Complete - 5 Days

M) Site Number 14
   a. Work Plan - Between the dates of October 1 and April 13 with at least 4" of snow on the ground, main areas to be mowed with our Caterpillar 320 Excavator with Seppi Flail Axe Mower and outer edges will be mowed with a combination of our Caterpillar 267 Skid Steer and Chainsaws.

b. Equipment to be Used
   i. Caterpillar 320 Excavator with Seppi Flail Axe Mower
   ii. Caterpillar 267 Track Mounted Skid Steer with Brush Mower
c. Estimated Time to Complete - 3 Days

N) Site Number 15
a. Work Plan - Between the dates of October 1 and April 13 with at least 4" of snow on the ground, main areas to be mowed with our Caterpillar 320 Excavator with Seppi Flail Axe Mower and outer edges will be mowed with a combination of our Caterpillar 267 Skid Steer and Chainsaws.
b. Equipment to be Used
   i. Caterpillar 320 Excavator with Seppi Flail Axe Mower
   ii. Caterpillar 267 Track Mounted Skid Steer with Brush Mower
c. Estimated Time to Complete - 8 Days

O) Site Number 16
a. Work Plan - Between the dates of October 1 and April 13 with at least 4" of snow on the ground, main areas to be mowed with our Caterpillar 320 Excavator with Seppi Flail Axe Mower and outer edges will be mowed with a combination of our Caterpillar 267 Skid Steer and Chainsaws.
b. Equipment to be Used
   i. Caterpillar 320 Excavator with Seppi Flail Axe Mower
   ii. Caterpillar 267 Track Mounted Skid Steer with Brush Mower
c. Estimated Time to Complete - 13 Days

## 1.200 Roles and Responsibilities

### 1.201 CONTRACTOR STAFF, ROLES, AND RESPONSIBILITIES

Contractor shall include in bid response all personnel assigned to this project in the form of an organizational chart. Organizational chart should include names, role and responsibilities, as well as contact numbers as appropriate to carry out this project.

Bidders Response:

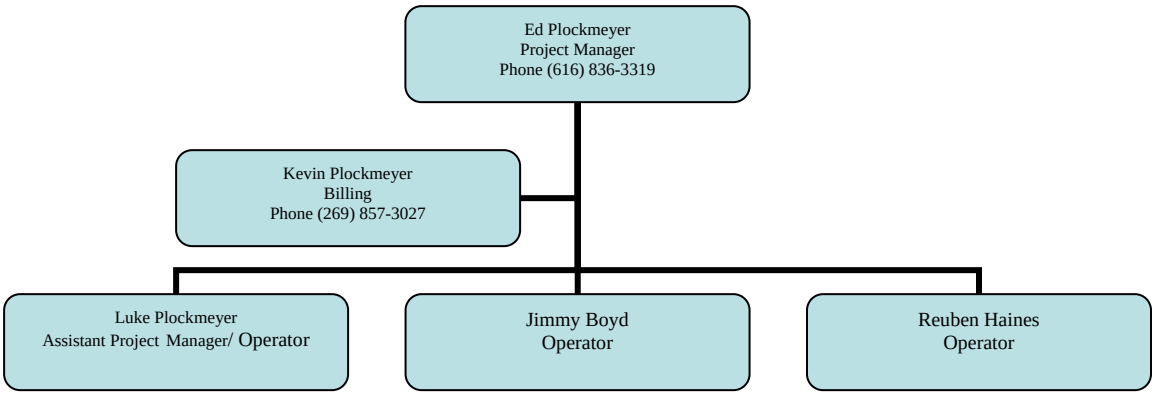


### 1.202 STATE STAFF, ROLES, AND RESPONSIBILITIES

The Project Manager for this work will be Maria Albright, Wildlife Technician at the Allegan State Game Area. She will oversee the day to day operations of this project. Any issues which arise regarding this contract may be funneled through the PM, however changes to the contract must be approved by DNR Procurement Services Buyer Jana Harding and DMB Purchasing Operations Buyer Erica Busick.

**1.203 OTHER ROLES AND RESPONSIBILITIES – Reserved**

**1.300 Project Plan**

**1.301 PROJECT PLAN MANAGEMENT**

Before beginning work on any site, the Contractor and the PM will meet to go over the boundaries and discuss work plan for that specific site. The Contractor will be required to provide site updates on a weekly basis, or daily if issues arise with the PM. Should issues arise that affect the contract as it is put forth in this document, the PM will contact DNR Buyer Jana Harding for resolution. Any contract changes must be approved by DMB Purchasing Operations. Upon the completion of each site, the Vendor will do a walk-thru with the PM to be sure all contract work has been completed.

Bidders Response:

A) Before beginning work on any site, Quantum Construction Co. agrees to meet with the Project Manager to discuss the site boundaries and the work plan for that specific site.
B) Quantum Construction Co. will provide site updates on a weekly basis, or daily if necessary, with the Project Manager.
C) Quantum Construction Co. agrees to contact the Project Manager and the DNR Buyer, Jana Harding, if any contractual issues arise.
D) Quantum Construction agrees that any contractual issues must be approved by the DMB purchasing operations.
E) Upon Completion of each site, Quantum Construction agrees to a walk-through with the Project Manager to be sure that all contract work has been completed.

**1.302 REPORTS**

A written report will be submitted to the Project Manager at the end of each work season. Reports can cover all sites worked in during the season. The report will include a brief synopsis of what the vendor did, methods used, issues that arose and how they were resolved, as well as feedback regarding the work they performed. Reports will be due to the PM by May 15th of each year.

Bidders Response:

Quantum Construction agrees to submit a written report to the Project Manager at the end of each work season that will cover all sites worked during the season. The report will include a brief synopsis of what Quantum Construction Co. did, methods that were used, issues that arose and how they were resolved, and any feedback on the work that was performed. Quantum Construction Co. will be submitted to the Project Manager by May 15th of each year.

**1.400 Project Management**

**1.401 ISSUE MANAGEMENT**

Should issues arise which endanger the project being completed, Bidder needs to propose in their bid response how they would go about handling the issue. Bidder should identify how issues will be captured, reported and escalated. Bidder should include responsible parties, phone numbers, e-mail address and process.

Bidders Response:

If issues arise which endanger the project being completed, Quantum Construction Co. will handle the issues by approaching the Project Manager and all other parties involved to discuss the problem and possible solutions. Quantum Construction Co. will provide a written report of the problems and solutions, and will distribute this report to the Project Manager as soon as problems may arise. Quantum Construction Co. will be proactive in our approach to handling issues to make sure they are resolved before any issue becomes a major stumbling block to completing the project.

**1.402 RISK MANAGEMENT**

Risks are those things that you can assume or anticipate in a project. Issues are imminent threats or things that have already occurred. Risk management generally involves (1) identification of the risk, (2) assigning a level of priority based on the probability of occurrence and impact to the project, (3) definition of mitigation strategies, and (4) monitoring of risk and mitigation strategy. Risk assessment review should be conducted on a regular basis. Bidder should propose a standard risk management process for managing the project as part of its bid response. Bidder should be asked to identify the risk management process to be utilized for this project, including responsible parties, phone numbers, email addresses if relevant, and processes.

Bidders Response:

Risk management for this project will be evaluated on a site by site basis. Prior to starting work on a particular site, Quantum Construction Co. will meet with the Project Manager and any other impacted parties to discuss all of the risks associated with the particular site. With the assistance of the Project Manager, Quantum Construction Co. will assign levels of priority to the various risks involved the particular site and risk mitigation strategies. Quantum Construction Co. will then perform the work according to the mitigation strategies, and will report the progress of the site work in regards to various risks to the Project Manager.

**1.403 CHANGE MANAGEMENT**

Changes which need to be made to the project need to be approved by the Project Manager, Maria Albright who will then contact DNR Procurement Buyer Jana Harding and work toward resolution. Any changes to the contract will also need DMB Purchasing Operations approval prior to work being done. Changes are not official until a Contract Change Notice has been issued by DMB Purchasing Operations.

If a proposed contract change is approved by the Contract Compliance Inspector, the Contract Compliance Inspector will submit a request for change to the Department of Management and Budget, Purchasing Operations Buyer, who will make recommendations to the Director of Purchasing Operations regarding ultimate approval/disapproval of change request. If the DMB Purchasing Operations Director agrees with the proposed modification, and all required approvals are obtained (including State Administrative Board), the Purchasing Operations Buyer will issue an addendum to the Contract, via a Contract Change Notice. **Contractors who provide products or services prior to the issuance of a Contract Change Notice by the DMB Office of Purchasing Operations, risk non-payment for the out-of-scope/pricing products and/or services.**

Bidders Response:

Quantum Construction Co. agrees that all contract changes need to be approved by the Department of Management and Budget. Any work that is completed without a proper change order directive will be viewed as out-of-scope work which could result in non-payment.

**1.500 Acceptance**

**1.501 CRITERIA**

The following criteria will be used by the State to determine Acceptance of the Services provided under this SOW. All work must be completed, inspected and signed off as acceptable by the Project Manager for the project to be considered complete.

**1.502 FINAL ACCEPTANCE**

Final acceptance will be granted upon site inspection and remedy of any discrepancies between work performed and work as laid out in the contract language.

### 1.600 Compensation and Payment

**1.601 COMPENSATION AND PAYMENT**

The Contract resulting from this bid will be a firm, fixed price contract. Contractor may request compensation in the form on an invoice submitted to the Project Manager upon final acceptance of a site. Partial payments can be made should several sites be issued on a Purchase Order.

### 1.700 Additional Terms and Conditions Specific to this SOW

**1.701 ADDITIONAL TERMS AND CONDITIONS SPECIFIC TO THIS SOW – RESERVED**

**Article 1, Attachment A – Reserved**

Pricing – Please Provide Pricing on DMB-285

**Article 1, Attachment B-Reserved**

Organizational Chart, including Key Personnel

**Article 1, Attachment C - Reserved**

**Article 1, Attachment D- Reserved**

**Article 1, Attachment E**
Project Work Plan

| Site Number | Acres | Description of Location | Treatment Type | Removal - Treatment Amount | Timing for herbicide |
|---|---|---|---|---|---|
| 1 | 28.5 | M89 and 48TH St to tree line | Removal | 80% | |
| 2 | 4.8 | Monroe Rd east | Removal | 100% | |
| 3 | 8.6 | Monroe translocation line | Removal | 100% | |
| 4 | 7.8 | 44th St to Pine pt to power line | Removal & Herbicide | 80% | Within 48 hours of stem cutting |
| 5 | 4.3 | 119th and 48th | Removal | 100% | |
| 6 | 10.8 | 119th and 48th north timber sale | Removal | 80% | |
| 7 | 44.0 | Horseman's campground | Removal | 80% | |
| 8 | 115.2 | Bass timber sale 52nd St | Removal | 80% | |
| 9 | 8.7 | 44th and 120th SE | Removal | 100% | |
| 10 | 15.6 | Horseman's east sample site | Removal | 80% | |
| 11 | 23.6 | Racetrack | Removal | 100% | |
| 12 | 34.0 | M89 and pipline NW | Removal | 80% | |
| 13 | 9.9 | 126th and 48th SE | Removal | 100% | |
| 14 | 5.4 | Monroe west sample site | Removal | 100% | |
| 15 | 26.1 | Boot timber sale 40th trail | Removal | 80% | |
| 16 | 36.8 | Snowmobile Staging | Removal | 100% | |
| 17 | 23.4 | 117th and 44th SE | Herbicide | 80% | Mechanical application during the dormant season |
| 18 | 22.6 | 42nd east side timber sale | Herbicide | 80% | Hand application at any time of the year |
| 19 | 32.5 | M89 and 48th triangle | Herbicide | 80% | Mechanical application with snow cover |

**Article 1, Attachment F**

Maps for sites

# Savanna Treatment Bids

Sites 1, 5, 6, 11, 12, 13, and 19

2007 Bid locations
Section corners
Roads
County Road
Freeway Ramp
State/Federal Hwy
Street
Two-Track
Rivers
Perennial Stream
Streams
Intermittent Stream/Drain
Perennial Stream
Lakes
Lake
Ownership
Private land
State land

N

0 0.25 0.5 0.75 Miles

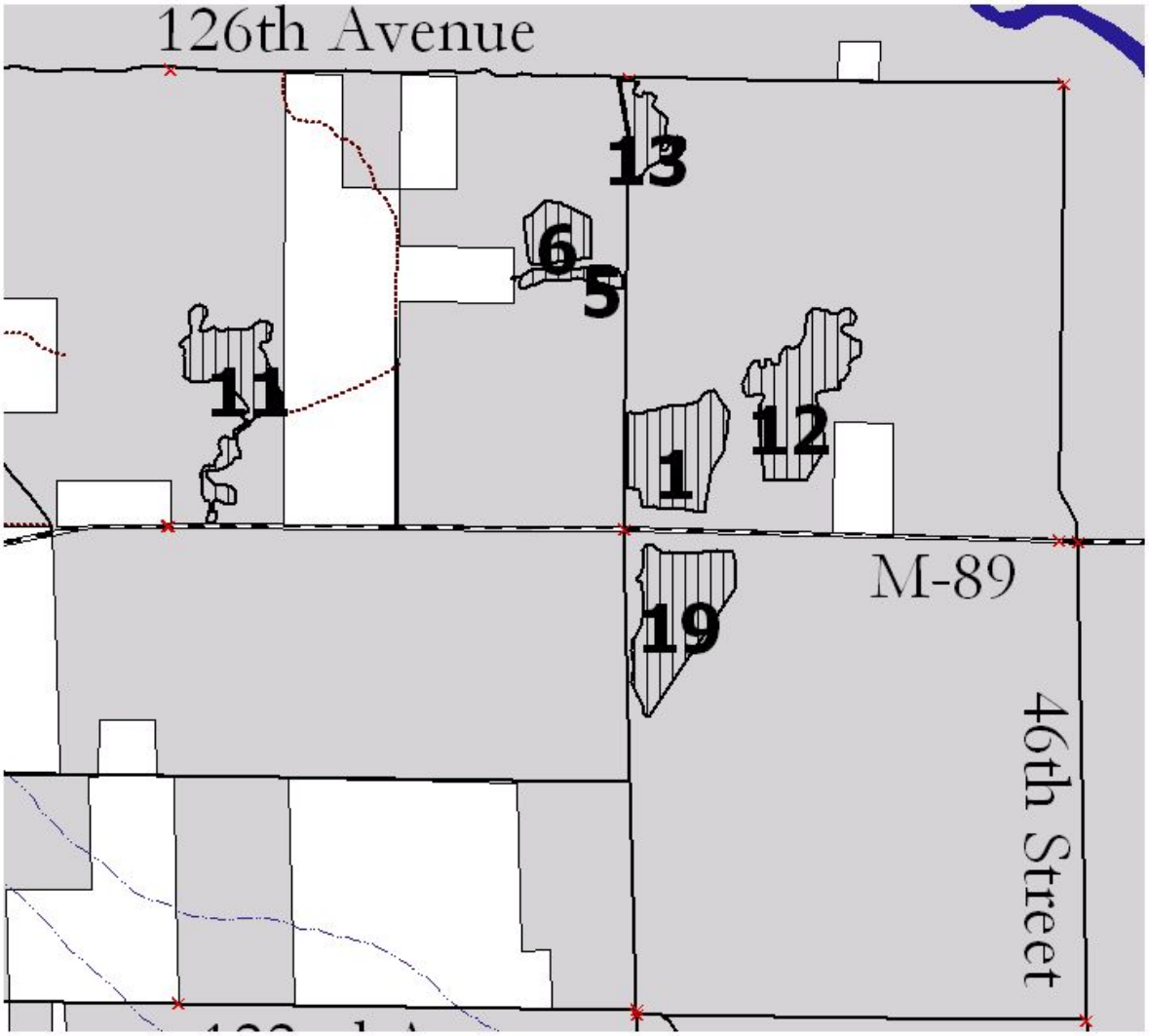

# Savanna Treatment Bids

Sites 7, 8, and 10

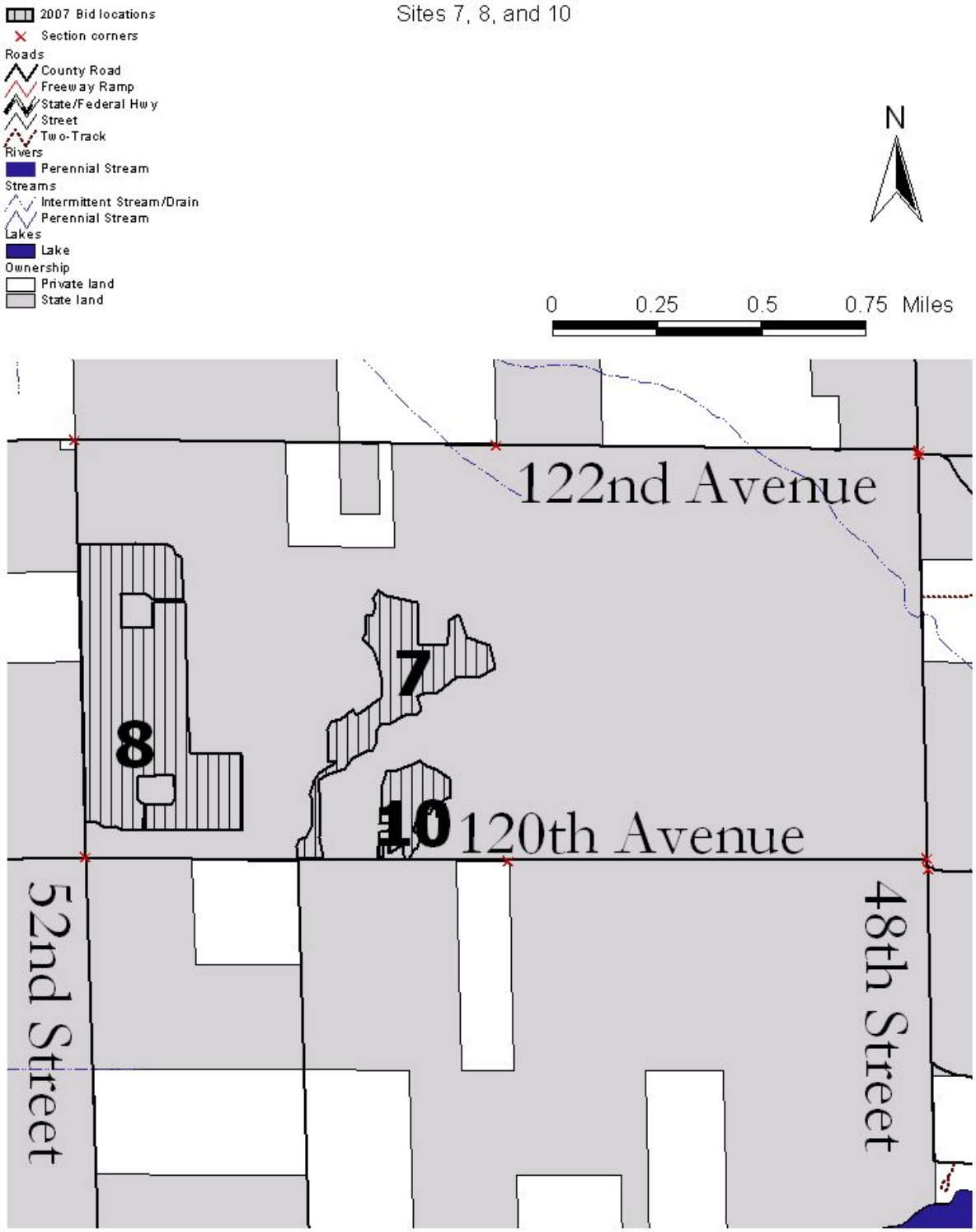

# Savanna Treatment Bids

Sites 2, 3, 4, 9, 14, 15, 16, 17, and 18

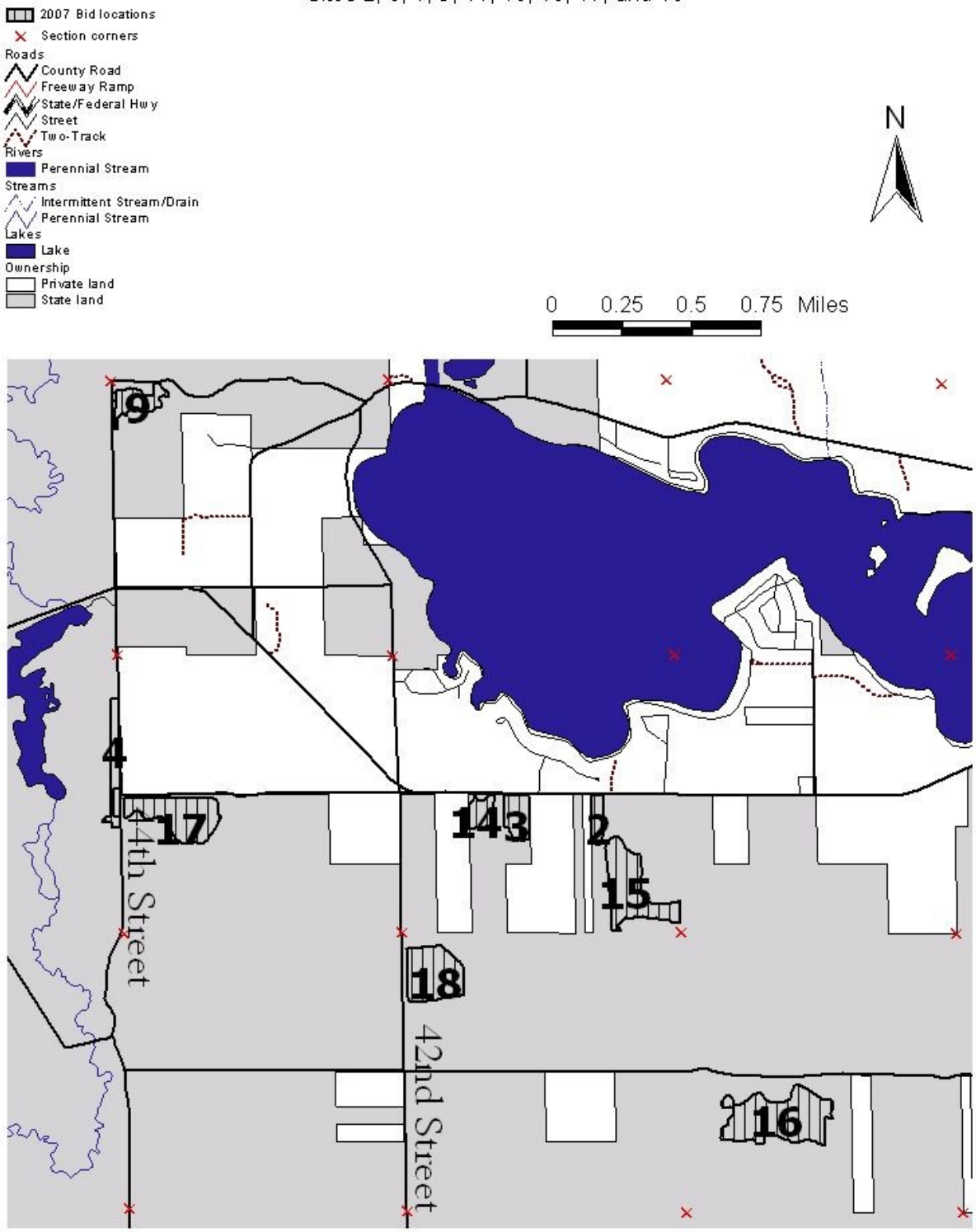

## Article 2 – General Terms and Conditions

### 2.010 Contract Structure and Administration

### 2.011 Definitions

Capitalized terms used in this Contract (including its Exhibits) shall have the meanings given below, unless the context requires otherwise:

(a) "Days" means calendar days unless otherwise specified.
(b) "24x7x365" means 24 hours a day, seven days a week, and 365 days a year (including the 366th day in a leap year).
(c) "Additional Service" means any Services/Deliverables within the scope of the Contract, but not specifically provided under any Statement of Work, that once added will result in the need to provide the Contractor with additional consideration. "Additional Service" does not include New Work.
(d) "Amendment Labor Rates" means the schedule of fully-loaded hourly labor rates attached as **Article 1, Attachment C**.- **N/A**
(e) "Audit Period" has the meaning given in **Section 2.111**.
(f) "Business Day," whether capitalized or not, shall mean any day other than a Saturday, Sunday or State-recognized legal holiday (as identified in the Collective Bargaining Agreement for State employees) from 8:00am EST through 5:00pm EST unless otherwise stated.
(g) "Incident" means any interruption in Services.
(h) "Business Critical" means any function identified in any Statement of Work as Business Critical.
(i) "Deliverable" means physical goods and/or commodities as required or identified by a Statement of Work
(j) "Key Personnel" means any Personnel designated in **Article 1, Section 1.201 and/or Attachment B,** as Key Personnel.
(k) "New Work" means any Services/Deliverables outside the scope of the Contract and not specifically provided under any Statement of Work, that once added will result in the need to provide the Contractor with additional consideration. "New Work" does not include Additional Service.
(l) "Services" means any function performed for the benefit of the State.
(m) "State Location" means any physical location where the State performs work. State Location may include state-owned, leased, or rented space.
(n) "Subcontractor" means a company Contractor delegates performance of a portion of the Services to, but does not include independent contractors engaged by Contractor solely in a staff augmentation role.
(o) "Work in Process" means a Deliverable that has been partially prepared, but has not been presented to the State for Approval.

### 2.012 Attachments and Exhibits

All Attachments and/or Exhibits attached to any, and all Statement(s) of Work, attached to, or referencing this Contract, are incorporated in their entirety into, and form part of, this Contract.

### 2.013 Statements of Work

(a) The parties agree that the Services to be rendered by Contractor pursuant to this Contract (and any future amendments of it) will be defined and described in detail in Statements of Work or Purchase Orders (PO) executed under this Contract. Contractor shall not be obliged or authorized to commence any work to implement a Statement of Work until authorized via a PO issued against this Contract, or an amendment to this Contract (see 2.106). Contractor shall perform in accordance with this Contract, including the Statements of Work/Purchase Orders executed under it.

(b) Unless otherwise agreed by the parties, each Statement of Work (as defined in Article 1) will include, or incorporate by reference to the appropriate Contract Article 1 Attachment containing, the following information:

- a description of the Services to be performed by Contractor under the Statement of Work;
- a project schedule (including the commencement and completion dates for all tasks, subtasks (for all projects of sufficient duration and complexity to warrant sub task breakdown), and Deliverables;
- a list of the Deliverables to be provided, if any, including any particular specifications and acceptance criteria for such Deliverables, and the dates on which the Deliverables are scheduled to be completed and delivered to the State;
- all Deliverable price schedules and other charges associated with the Statement of Work, the overall fixed price for such Statement of Work and any other appropriate pricing and payment terms;
- a specification of Contractor's and the State's respective performance responsibilities with respect to the performance or completion of all tasks, subtasks and Deliverables;
- a listing of any Key Personnel of Contractor and/or its Subcontractors for that Statement of Work and any future Statements of Work;
- any other information or provisions the parties agree to include.

(c) Reserved.

(d) The initial Statements of Work, as of the Effective Date, are attached to this Contract.

**2.014 Issuing Office**

This Contract is issued by the Department of Management and Budget, Office of Purchasing Operations and Department of Natural Resources (collectively, including all other relevant State of Michigan departments and agencies, the "State"). Purchasing Operations is the sole point of contact in the State with regard to all procurement and contractual matters relating to the Contract. **Purchasing Operations is the only State office authorized to change, modify, amend, alter or clarify the prices, specifications, terms and conditions of this Contract.** The Contractor Administrator within Purchasing Operations for this Contract is:

Erica Busick
Purchasing Operations
Business Services Administration
Department of Management and Budget
Mason Bldg, 2nd Floor
PO Box 30026
Lansing, MI 48909
BusickE@michigan.gov
Phone: (517) 241-0684

**2.015 Contract Compliance Inspector**

Upon receipt at Purchasing Operations of the properly executed Contract, it is anticipated that the Director of DMB Purchasing Operations, in consultation with (insert the end using agency), will direct that the person named below, or any other person so designated, be authorized to monitor and coordinate the activities for the Contract on a day-to-day basis during its term. However, monitoring of this Contract implies **no authority to change, modify, clarify, amend, or otherwise alter the prices, terms, conditions and specifications of such Contract as that authority is retained by the Office of Purchasing Operations**. The Contract Compliance Inspector for this Contract is:

Jana Harding
Department of Natural Resources
Mason Bldg, 6th Floor
PO Box 30028
Lansing, MI 48909
Hardingj3@michigan.gov
(517) 373-1190

**2.016 Project Manager**

The following individual will oversee the project:

Name: Maria Albright
Department of Natural Resources
Allegan State Game Area
4590 118th Avenue
Allegan, Michigan 49010
Albrighm@michigan.gov
517-673-2430

**2.020 Contract Objectives/Scope/Background**

**2.021 Background**

Approximately 7000 acres of the Game Area is designated to be restored to Savanna/Oak Barrens conditions. This habitat type occurred over a significant portion of the Game Area prior to widespread European settlement. The Savanna/Oak Barrens ecosystem is also critical habitat for numerous species of concern including the federally endangered Karner Blue Butterfly.

**2.022 Purpose**

The Michigan Department of Natural Resources, Wildlife Division, Allegan State Game Area is seeking bids for control of woody encroachment in Savannas at the Allegan State Game Area in Allegan, Michigan. The general goal of this project is to reduce woody stem density in designated areas to reduce shading of grassland plants by trees and shrubs. This work will be accomplished by mowing, cutting, or hydro axing of woody stems and herbicide application as laid out in this bid.

**2.23 Objectives and Scope**

The objective of this contract is hire a contractor to restore parts of the Allegan State Game Area back to a Savanna but removing invasive woody debri through cutting and herbicide applications.

**2.024 Interpretation**

Sections 2.021 through 2.023 are intended to provide background and context for this Contract and are not intended to expand the scope of the obligations under this Contract or to alter the plain meaning of the terms and conditions of this Contract. However, to the extent the terms and conditions of this Contract are unclear or otherwise ambiguous, such terms and conditions are to be interpreted and construed in light of the provisions of this Section.

**2.025 Form, Function and Utility**

If the Contract is for use of more than one State agency and if the Deliverable/Service does not the meet the form, function, and utility required by that State agency, that agency may, subject to State purchasing policies, procure the Deliverable/Service from another source.

**2.030 Legal Effect and Term**

**2.031 Legal Effect**

Except as otherwise agreed in writing by the parties, the State assumes no liability for costs incurred by Contractor or payment under this Contract, until Contractor is notified in writing that this Contract (or Change Order) has been approved by the State Administrative Board (if required), approved and signed by all the parties, and a Purchase Order against the Contract has been issued.

**2.032 Contract Term**

This Contract is for a period of three (3) years commencing on the date that the last signature required to make the Contract enforceable is obtained. All outstanding Purchase Orders shall also expire upon the termination (cancellation for any of the reasons listed in 2.210) of the Contract, unless otherwise extended pursuant to the Contract. Absent an early termination for any reason, Purchase Orders issued but not expired, by the end of the Contract's stated term, will remain in effect for the balance of the fiscal year for which they were issued.

**2.033 Renewal(s)**

This Contract may be renewed in writing by mutual agreement of the parties not less than 30 days before its expiration. The Contract may be renewed for up to two (2) additional one (1) year periods. Successful completion of negotiations surrounding the terms of the extension, will be a pre-requisite for the exercise of any option year.

**2.040 Contractor Personnel**

**2.041 Contractor Personnel**

(a) Personnel Qualifications. All persons assigned by Contractor to the performance of Services under this Contract shall be employees of Contractor or its majority-owned (directly or indirectly, at any tier) subsidiaries (or a State-approved Subcontractor) and shall be fully qualified to perform the work assigned to them. Contractor shall include a similar provision in any subcontract entered into with a Subcontractor. For the purposes of this Contract, independent contractors engaged by Contractor solely in a staff augmentation role shall be treated by the State as if they were employees of Contractor for this Contract only; however, the State understands that the relationship between Contractor and Subcontractor is an independent contractor relationship.

(b) Key Personnel

(i) In discharging its obligations under this Contract, Contractor shall provide the named Key Personnel on the terms indicated. **Article 1, Attachment B** provides an organization chart showing the roles of certain Key Personnel, if any.

(ii) Key Personnel shall be dedicated as defined in **Article 1, Attachment B** to the Project for its duration in the applicable Statement of Work with respect to other individuals designated as Key Personnel for that Statement of Work.

(iii) The State will have the right to recommend and approve in writing the initial assignment, as well as any proposed reassignment or replacement, of any Key Personnel. Before assigning an individual to any Key Personnel position, Contractor will notify the State of the proposed assignment, will introduce the individual to the appropriate State representatives, and will provide the State with a resume and any other information about the individual reasonably requested by the State. The State reserves the right to interview the individual before granting written approval. In the event the State finds a proposed individual unacceptable, the State will provide a written explanation including reasonable detail outlining the reasons for the rejection. Additionally, the State's request shall be based on legitimate, good-faith reasons. Proposed alternative for the individual denied, shall be fully qualified for the position.

(iv) Contractor shall not remove any Key Personnel from their assigned roles or the Contract without the prior written consent of the State. If the Contractor does remove Key Personnel without the prior written consent of the State, it shall be considered an unauthorized removal ("Unauthorized Removal"). It shall not be considered an Unauthorized Removal if Key Personnel must be replaced for reasons beyond the reasonable control of Contractor, including illness, disability, leave of absence, personal emergency circumstances, resignation or for cause termination of the Key Personnel's employment. It shall not be considered an Unauthorized Removal if Key Personnel must be replaced because of promotions or other job movements allowed by Contractor personnel policies or Collective Bargaining Agreement(s) as long as the State receives prior written notice before shadowing occurs and Contractor provides 30 days of shadowing unless parties agree to a different time period. The Contractor with the State shall review any Key Personnel replacements, and appropriate transition planning will be established. Any Unauthorized Removal may be considered by the State to be a material breach of the Contract, in respect of which the State may elect to exercise its rights under **Section 2.210**.

(v) It is acknowledged that an Unauthorized Removal will interfere with the timely and proper completion of the Contract, to the loss and damage of the State, and that it would be impracticable and extremely difficult to fix the actual damage sustained by the State as a result of any Unauthorized Removal. Therefore, Contractor and the State agree that in the case of any Unauthorized Removal in respect of which the State does not elect to exercise its rights under **Section 2.210**, the State may assess liquidated damages against Contractor as specified below.

For the Unauthorized Removal of any Key Personnel designated in the applicable Statement of Work, the liquidated damages amount shall be $25,000.00 per individual provided Contractor identifies a replacement approved by the State pursuant to **Section 2.041** and assigns the replacement to the Project to shadow the Key Personnel s/he is replacing for a period of at least 30 days prior to such Key Personnel's removal.

If Contractor fails to assign a replacement to shadow the removed Key Personnel for at least 30 days, in addition to the $25,000.00 liquidated damages for an Unauthorized Removal, Contractor shall pay the amount of $833.33 per day for each day of the 30 day shadow period that the replacement Key Personnel does not shadow the removed Key Personnel, up to $25,000.00 maximum per individual. The total liquidated damages that may be assessed per Unauthorized Removal and failure to provide 30 days of shadowing shall not exceed $50,000.00 per individual.

(c) Re-assignment of non-Key Personnel. Prior to re-deploying to other projects, at the completion of their assigned tasks on the Project, teams of its non-Key Personnel who are performing Services on-site at State facilities or who are otherwise dedicated primarily to the Project, Contractor will give the State at least 10 Business Days notice of the proposed re-deployment to give the State an opportunity to object to the re-deployment if the State reasonably believes such team's Contract responsibilities are not likely to be completed and approved by the State prior to the proposed date of re-deployment.

(d) Re-assignment of Personnel at the State's Request. The State reserves the right to require the removal from the Project of Contractor personnel found, in the judgment of the State, to be unacceptable. The State's request shall be written with reasonable detail outlining the reasons for the removal request. Additionally, the State's request shall be based on legitimate, good-faith reasons. Replacement personnel for the removed person shall be fully qualified for the position. If the State exercises this right, and the Contractor cannot immediately replace the removed personnel, the State agrees to an equitable adjustment in schedule or other terms that may be affected by the State's required removal. If any such incident with removed personnel results in delay not reasonable anticipatable under the circumstances and which is attributable to the State, the applicable SLAs for the affected Service will not be counted in **Section 2.076** for a time as agreed to by the parties.

(e) Staffing Levels.

(i) All staff requirements not specified in the applicable Statement of Work or State-approved project plan as State personnel will be supplied by Contractor. This includes secretarial, clerical and Contract administration support staff necessary for Contractor to perform its obligations hereunder.

(ii) Contractor shall provide sufficient personnel resources for the completion of Contract tasks indicated in Contractor's project plan approved by the State. If the level of personnel resources is insufficient to complete any Contractor Contract tasks in accordance with the Contract time schedule as demonstrated by Contractor's failure to meet mutually agreed to time schedules, Contractor shall promptly add additional qualified personnel resources to the performance of the affected tasks, at no additional charge to the State, in an amount sufficient to complete performance of Contractor's tasks in accordance with the Contract time schedule.

(f) Personnel Turnover. The Parties agree that it is in their best interests to keep the turnover rate of employees of Contractor and its Subcontractors who are performing the Services to a reasonable minimum. Accordingly, if the State determines that the turnover rate of such employees is excessive and so notifies Contractor, Contractor will meet with the State to discuss the reasons for the turnover rate and otherwise use commercially reasonable efforts to minimize such turnover rate. If requested to do so by the State, Contractor will submit to the State its proposals for reducing the turnover rate to an acceptable level. In any event, notwithstanding the turnover of personnel, Contractor remains obligated to perform the Services without degradation and in accordance with the State-approved Contract schedule.

(g) Location. All staff assigned by Contractor to work on the Contract will perform their duties either primarily at Contractor's offices and facilities or at State facilities. Without limiting the generality of the foregoing, Key Personnel will, at a minimum, spend at least the amount of time on-site at State facilities as indicated in the applicable Statement of Work. Subject to availability, selected Contractor personnel may be assigned office space to be shared with State personnel.

**2.042 Contractor Identification**

Contractor employees shall be clearly identifiable while on State property by wearing a State-issued badge, as required. Contractor employees are required to clearly identify themselves and the company they work for whenever making contact with State personnel by telephone or other means.

**2.043 Cooperation with Third Parties**

Contractor agrees to cause its personnel and the personnel of any Subcontractors to cooperate with the State and its agents and other contractors including the State's Quality Assurance personnel, and, as reasonably requested by the State, to provide to the State's agents and other contractors with reasonable access to Contractor's Project personnel, systems and facilities to the extent they relate to activities specifically associated with this Contract and will not interfere or jeopardize the safety or operation of the systems or facilities and provided Contractor receives reasonable prior written notice of such request. The State acknowledges that Contractor's time schedule for the Contract is very specific and agrees not to unnecessarily or unreasonably interfere with, delay or otherwise impeded Contractor's performance under this Contract with such requests for access.

**2.044 Subcontracting by Contractor**

(a) Contractor shall have full responsibility for the successful performance and completion of all of the Services and Deliverables. The State will consider Contractor to be the sole point of contact with regard to all contractual matters under this Contract, including payment of any and all charges for Services and Deliverables.

(b) Contractor shall not delegate any duties under this Contract to a Subcontractor unless the Department of Management and Budget, Office of Purchasing Operations has given written consent to such delegation. The State shall have the right of prior written approval of all Subcontractors and to require Contractor to replace any Subcontractors found, in the reasonable judgment of the State, to be unacceptable. The State's request shall be written with reasonable detail outlining the reasons for the removal request. Additionally, the State's request shall be based on legitimate, good-faith reasons. Replacement Subcontractor(s) for the removed Subcontractor shall be fully qualified for the position. If the State exercises this right, and the Contractor cannot immediately replace the removed Subcontractor, the State will agree to an equitable adjustment in schedule or other terms that may be affected by the State's required removal. If any such incident with a removed Subcontractor results in delay not reasonable anticipatable under the circumstances and which is attributable to the State, the applicable SLAs for the affected Work will not be counted in **Section 2.076** for a time agreed upon by the parties.

(c) In any subcontracts entered into by Contractor for the performance of the Services, Contractor shall require the Subcontractor, to the extent of the Services to be performed by the Subcontractor, to be bound to Contractor by the terms of this Contract and to assume toward Contractor all of the obligations and responsibilities that Contractor, by this Contract, assumes toward the State. The State reserves the right to receive copies of and review all subcontracts, although Contractor may delete or mask any proprietary information, including pricing, contained in such contracts before providing them to the State. The management of any Subcontractor will be the responsibility of Contractor, and Contractor shall remain responsible for the performance of its Subcontractors to the same extent as if Contractor had not subcontracted such performance. Contractor shall make all payments to Subcontractors or suppliers of Contractor. Except as otherwise agreed in writing by the State and Contractor, the State will not be obligated to direct payments for the Services other than to Contractor. The State's written approval of any Subcontractor engaged by Contractor to perform any obligation under this Contract shall not relieve Contractor of any obligations or performance required under this Contract. Attached as **Exhibit A** is a list of the Subcontractors, if any, approved by the State as of the execution of this Contract, together with a copy of the applicable subcontract.

(d) Except where specifically approved in writing by the State on a case-by-case basis, Contractor shall flow down the obligations in **Sections 2.040, 2.110, 2.150, 2.160, 2.171(c), 2.172(b), 2.180, 2.260, 2.276, 2.297** in all of its agreements with any Subcontractors.

(e) The Contractor shall select subcontractors (including suppliers) on a competitive basis to the maximum practical extent consistent with the objectives and requirements of the Contract.

**2.045 Contractor Responsibility for Personnel**

Contractor shall be responsible for all acts and omissions of its employees, as well as the acts and omissions of any other personnel furnished by Contractor to perform the Services.

**2.050 State Standards**

**2.051 Existing Technology Standards - Reserved**

**2.052 PM Methodology Standards – Reserved**

**2.053 Adherence to Portal Technology Tools - Reserved**

**2.054 Acceptable Use Policy – Reserved**

**2.060 Deliverables**

**2.061 Ordering**

(a) Any Services/Deliverables to be furnished under this Contract shall be ordered by issuance of written Purchase Orders/Blanket Purchase Order by the State after approval by the Contract Administrator or his/her designee. All orders are subject to the terms and conditions of this Contract. In the event of conflict between an order and this Contract, the Contract shall take precedence as stated in **Section 2.293**. In no event shall any additional terms and conditions contained on a Purchase Order/Blanket Purchase Order be applicable, unless specifically contained in that Purchase Order/Blanket Purchase Order's accompanying Statement of Work.

**2.062 Software – Reserved**

**2.063 Hardware – Reserved**

**2.064 Equipment to be New and Prohibited Products – Reserved**

**2.070 Performance**

**2.071 Performance, In General**

The State engages Contractor to execute the Contract and perform the Services/provide the Deliverables, and Contractor undertakes to execute and complete the Contract in its entirety in accordance with the terms and conditions of this Contract and with the participation of State representatives as specified in this Contract.

**2.072 Time of Performance**

(a) Contractor shall use commercially reasonable efforts to provide the resources necessary to complete all Services and Deliverables in accordance with the time schedules contained in the Statements of Work and other Exhibits governing the work, and with professional quality.

(b) Without limiting the generality of **Section 2.072(a)**, Contractor shall notify the State in a timely manner upon becoming aware of any circumstances that may reasonably be expected to jeopardize the timely and successful completion of any Deliverables/Services on the scheduled due dates in the latest State-approved delivery schedule and, in such event, shall inform the State of the projected actual delivery date.

(c) If Contractor believes that a delay in performance by the State has caused or will cause Contractor to be unable to perform its obligations in accordance with specified Contract time periods, Contractor shall notify the State in a timely manner and shall use commercially reasonable efforts to perform its obligations in accordance with such Contract time periods notwithstanding the State's failure. Contractor will not be in default for a delay in performance to the extent such delay is caused by the State.

**2.073 Liquidated Damages – Reserved**

**2.074 Bankruptcy**

If Contractor shall file for protection under the bankruptcy laws, or if an involuntary petition shall be filed against Contractor and not removed within 30 days, or if the Contractor becomes insolvent, be adjudicated bankrupt, or if it should make a general assignment for the benefit of creditors, or if a receiver shall be appointed due to its insolvency, and Contractor and/or its affiliates are unable to provide reasonable assurances that Contractor and/or its affiliates can deliver the services provided herein, the State may, without prejudice to any other right or remedy, terminate this Contract, in whole or in part, and, at its option, may take possession of the "Work in Process" and finish such Works in Process by whatever appropriate method the State may deem expedient. Contractor will fix appropriate notices or labels on the Work in Process to indicate ownership by the State. To the extent reasonably possible, materials and Work in Process shall be stored separately from other stock and marked conspicuously with labels indicating ownership by the State.

To secure the State's progress payments before the delivery of any services or materials required for the execution of Contractor's obligations hereunder, and any work which Contractor may subcontract in the support of the performance of its obligations hereunder, title shall vest in the State to the extent the State has made progress payments hereunder.

**2.075 Time is of the Essence**

The Contractor agrees that time is of the essence in the performance of the Contractor's obligations under this Contract.

**2.076 Service Level Agreements (SLAs) - Reserved**

**2.080 Delivery and Acceptance of Deliverables**

**2.081 Delivery Responsibilities - Reserved**

**2.082 Delivery of Deliverables – Reserved**

**2.083 Testing – Reserved**

**2.084 Approval of Deliverables, In General**

(a) All Deliverables (Physical Deliverables and Written Deliverables) and Services require formal written approval by the State, in accordance with the following procedures. Formal approval by the State requires that the Deliverable be confirmed in writing by the State to meet its specifications, which will include the successful completion of Testing as applicable in **Section 2.083**, to be led by the State with the support and assistance of Contractor. The parties acknowledge that the approval process set forth herein will be facilitated by ongoing consultation between the parties, visibility of interim and intermediate Deliverables and collaboration on key decisions.

(b) The State's obligation to comply with any State Review Period is conditioned on the timely delivery of Deliverables/Services being reviewed.

(c) Prior to commencement of its review or testing of a Deliverable/Service, the State may inspect the Deliverable/Service to confirm that all components of the Deliverable/Service have been delivered without material deficiencies. If the State determines that the Deliverable/Service has material deficiencies, the State may refuse delivery of the Deliverable/Service without performing any further inspection or testing of the Deliverable/Service. Otherwise, the review period will be deemed to have started on the day the State receives the Deliverable or the Service begins, and the State and Contractor agree that the Deliverable/Service is ready for use and, where applicable, certification by Contractor in accordance with **Section 2.083(a)**.

(d) The State will approve in writing a Deliverable/Service upon confirming that it conforms to and, performs in accordance with, its specifications without material deficiency. The State may, but shall not be required to, conditionally approve in writing a Deliverable/Service that contains material deficiencies if the State elects to permit Contractor to rectify them post-approval. In any case, Contractor will be responsible for working diligently to correct within a reasonable time at Contractor's expense all deficiencies in the Deliverable/Service that remain outstanding at the time of State approval.

(e) If, after three (3) opportunities (the original and two [2] repeat efforts), Contractor is unable to correct all deficiencies preventing Final Acceptance of a Deliverable/Service, the State may: (i) demand that Contractor cure the failure and give Contractor additional time to cure the failure at the sole expense of Contractor; or (ii) keep the Contract in force and do, either itself or through other parties, whatever Contractor has failed to do, in which event Contractor shall bear any excess expenditure incurred by the State in so doing beyond the Contract price for such Deliverable/Service and will pay the State an additional sum equal to ten percent (10%) of such excess expenditure to cover the State's general expenses provided the State can furnish proof of such general expenses; or (iii) terminate the particular Statement of Work for default, either in whole or in part by notice to Contractor provided Contractor is unable to cure such breach. Notwithstanding the foregoing, the State shall not use, as a basis for exercising its termination rights under this Section, deficiencies discovered in a repeat State Review Period that could reasonably have been discovered during a prior State Review Period.

(f) The State, at any time and in its reasonable discretion, may halt the testing or approval process if such process reveals deficiencies in or problems with a Deliverable/Service in a sufficient quantity or of a sufficient severity as to make the continuation of such process unproductive or unworkable. In such case, the State may stop using the Service or return the applicable Deliverable to Contractor for correction and re-delivery prior to resuming the testing or approval process.

**2.085 Process For Approval of Written Deliverables - Reserved**

**2.086 Process for Approval of Services**

The State Review Period for approval of Services is governed by the applicable Statement of Work (failing which the State Review Period, by default, shall be 30 Business Days for Services). The State agrees to notify Contractor in writing by the end of the State Review Period either stating that the Service is approved in the form delivered by Contractor or describing any deficiencies that must be corrected prior to approval of the Services (or at the State's election, subsequent to approval of the Service). If the State delivers to Contractor a notice of deficiencies, Contractor will correct the described deficiencies and within 30 Business Days resubmit the Service in a form that shows all revisions made to the original version delivered to the State. Contractor's correction efforts will be made at no additional charge. Upon implementation of a corrected Service from Contractor, the State will have a reasonable additional period of time, not to exceed the length of the original State Review Period, to review the corrected Service for conformity and that the identified deficiencies have been corrected.

**2.087 Process for Approval of Physical Deliverables – Reserved**

**2.088 Final Acceptance**

Unless otherwise stated in the Statement of Work or Purchase Order, "Final Acceptance" of each Deliverable shall occur when each Deliverable/Service has been approved by the State following the State Review Periods identified in **Sections 2.080-2.087**. Payment will be made for Deliverables installed and accepted. Upon acceptance of a Service, the State will pay for all Services provided during the State Review Period that conformed to the acceptance criteria.

**2.080 Delivery and Acceptance of Deliverables**

**2.081 Delivery of Deliverables – Reserved**

**2.082 Contractor System Testing –Reserved**

**2.083 Approval of Deliverables, In General – Reserved**

**2.084 Process for Approval of Written Deliverables – Reserved**

**2.085 Process for Approval of Custom Software Deliverables – Reserved**

**2.086 Final Acceptance**

"Final Acceptance" shall be considered to occur when the Custom Software Deliverable to be delivered has been approved by the State and has been operating in production without any material deficiency for 14 consecutive days. If the State elects to defer putting a Custom Software Deliverable into live production for its own reasons, not based on concerns about outstanding material deficiencies in the Deliverable, the State shall nevertheless grant Final Acceptance of the Project.

**2.090 Financial**

**2.091 Pricing**

(a) Fixed Prices for Services/Deliverables
Each Statement of Work/PO issued under this Contract shall specify (or indicate by reference to the appropriate Contract Exhibit) the firm, fixed prices for all Services/Deliverables, and the associated payment milestones and payment amounts. To the extent the parties agree that certain specific Services will be provided on a time and materials basis, such Services shall be provided at the Amendment Labor Rates (**Article 1, Attachment C**). The State may make progress payments to the Contractor when requested as work progresses, but not more frequently than monthly, in amounts approved by the Contract Administrator, after negotiation. Contractor must show verification of measurable progress at the time of requesting progress payments.

(b) Adjustments for Reductions in Scope of Services/Deliverables
If the scope of the Services/Deliverables under any Statement of Work issued under this Contract is subsequently reduced by the State, the parties shall negotiate an equitable reduction in Contractor's charges under such Statement of Work commensurate with the reduction in scope, using the rates in **Article 1, Attachment** unless specifically identified in an applicable Statement of Work.

(c) Services/Deliverables Covered
For all Services/Deliverables to be provided by Contractor (and its Subcontractors, if any) under this Contract, the State shall not be obligated to pay any amounts in addition to the charges specified in this Contract.

(d) Labor Rates
All time and material charges will be at the rates specified in **Article 1, Attachment C**.

**2.092 Invoicing and Payment Procedures and Terms**

(a) Invoicing and Payment – In General

(i) Each Statement of Work issued under this Contract shall list (or indicate by reference to the appropriate Contract Exhibit) the prices for all Services/Deliverables, equipment and commodities to be provided, and the associated payment milestones and payment amounts.

(ii) Each Contractor invoice will show details as to charges by Service/Deliverable component and location at a level of detail reasonably necessary to satisfy the State's accounting and charge-back requirements. The charges for Services billed on a time and materials basis shall be determined based on the actual number of hours of Services performed, at the applicable Labor Rates specified in **Article 1, Attachment C**. Invoices for Services performed on a time and materials basis will show, for each individual, the number of hours of Services performed during the billing period, the billable skill/labor category for such person and the applicable hourly billing rate. Prompt payment by the State is contingent on the Contractor's invoices showing the amount owed by the State minus any holdback amount to be retained by the State in accordance with **Section 2.094**.

(iii) Correct invoices will be due and payable by the State, in accordance with the State's standard payment procedure as specified in 1984 Public Act No. 279, MCL 17.51 et seq., within forty-five (45) days after receipt, provided the State determines that the invoice was properly rendered.

(b) Taxes (See Section 2.305 and Article 3, Section 3.022-3.024 for additional )
The State is exempt from Federal Excise Tax, State and Local Sales Taxes, and Use Tax with respect to the sale to and use by it of tangible personal property. Such taxes shall not be included in Contract prices as long as the State maintains such exemptions. Copies of all tax exemption certificates shall be supplied to Contractor, if requested.

(c) Out-of-Pocket Expenses
Contractor acknowledges that the out-of-pocket expenses that Contractor expects to incur in performing the Services/ providing the Deliverables (such as, but not limited to, travel and lodging, document reproduction and shipping, and long distance telephone) are included in Contractor's fixed price for each Statement of Work. Accordingly, Contractor's out-of-pocket expenses are not separately reimbursable by the State unless, on a case-by-case basis for unusual expenses, the State has agreed in advance and in writing to reimburse Contractor for such an expense at the State's current travel reimbursement rates. See http://www.mi.gov/dmb/0,1607,7-150-9141_13132---,00.html for current rates.

(d) Pro-ration
To the extent there are any Services that are to be paid for on a monthly basis, the cost of such Services shall be pro-rated for any partial month.

(e) Antitrust Assignment
The Contractor assigns to the State any claim for overcharges resulting from antitrust violations to the extent that those violations concern materials or services supplied by third parties to the Contractor, toward fulfillment of this Contract.

(f) Final Payment
The making of final payment by the State to Contractor does not constitute a waiver by either party of any rights or other claims as to the other party's continuing obligations under the Contract, nor will it constitute a waiver of any claims by one party against the other arising from unsettled claims or failure by a party to comply with this Contract, including claims for Services and Deliverables not reasonably known until after acceptance to be defective or substandard. Contractor's acceptance of final payment by the State under this Contract shall constitute a waiver of all claims by Contractor against the State for payment under this Contract, other than those claims previously filed in writing on a timely basis and still unsettled.

**2.093 State Funding Obligation**

The State's obligation under this Contract is payable only and solely from funds appropriated for the purpose of this Contract. Contractor acknowledges and agrees that all funds for payments after the end of the current fiscal year are subject to the availability of a legislative appropriation for the purpose of this Contract. Events of non-appropriation are addressed further in **Section 2.210** of this Contract.

**2.094 Holdback – Reserved**

**2.095 Electronic Payment Availability**

Public Act 533 of 2004 requires that payments under this contract be processed by electronic funds transfer (EFT). Contractor is required to register to receive payments by EFT at the Contract & Payment Express website (www.cpexpress.state.mi.us).

**2.100 Contract Management**

**2.101 Contract Management Responsibility**

(a) Contractor shall have overall responsibility for managing and successfully performing and completing the Services/Deliverables, subject to the overall direction and supervision of the State and with the participation and support of the State as specified in this Contract. Contractor's duties will include monitoring and reporting the State's performance of its participation and support responsibilities (as well as Contractor's own responsibilities) and providing timely notice to the State in Contractor's reasonable opinion if the State's failure to perform its responsibilities in accordance with **Article 1, Attachment E** (Project Plan) is likely to delay the timely achievement of any Contract tasks.

(b) The Services/Deliverables will be provided by the Contractor either directly or through its affiliates, subsidiaries, subcontractors or resellers. Regardless of the entity providing the Service/Deliverable, the Contractor will act as a single point of contact coordinating these entities to meet the State's need for Services/Deliverables. Nothing in this Contract, however, shall be construed to authorize or require any party to violate any applicable law or regulation in its performance of this Contract.

**2.102 Problem and Contract Management Procedures**

Problem Management and Contract Management procedures will be governed by the Contract and the applicable Statements of Work.

**2.103 Reports and Meetings**

(a) Reports.

Within 30 days after the Effective Date, the parties shall determine an appropriate set of periodic reports to be issued by Contractor to the State. Such reports may include:

(i) separately address Contractor's performance in each area of the Services;

(ii) for each area of the Services, assess the degree to which Contractor has attained or failed to attain the pertinent objectives in that area, including on-time completion and delivery of Deliverables;

(iii) explain the reasons for any failure to achieve on-time completion and delivery of Deliverables and include a plan for corrective action where appropriate;

(iv) describe any circumstances that Contractor anticipates will impair or prevent on-time completion and delivery of Deliverables in upcoming reporting periods;

(v) include plans for corrective action or risk mitigation where appropriate and describe the status of ongoing problem resolution efforts;

(vi) provide reports setting forth a comparison of actual hours spent by Contractor (including its augmented personnel and Subcontractors) in performing the Project versus hours budgeted by Contractor.

(vii) set forth a record of the material personnel changes that pertain to the Services and describe planned changes during the upcoming month that may affect the Services.

(viii) include such documentation and other information may be mutually agreed to verify compliance with, and meeting the objectives of, this Contract.

(ix) set forth an updated schedule that provides information on the status of upcoming Deliverables, expected dates of delivery (or redelivery) of such Deliverables and estimates on timing for completion of the Project.

(b) Meetings.
Within 30 days after the Effective Date, the parties shall determine an appropriate set of meetings to be held between representatives of the State and Contractor. Contractor shall prepare and circulate an agenda sufficiently in advance of each such meeting to give participants an opportunity to prepare for the meeting. Contractor shall incorporate into such agenda items that the State desires to discuss. At the State's request, Contractor shall prepare and circulate minutes promptly after a meeting.

**2.104 System Changes – Reserved**

**2.105 Reserved**

**2.106 Change Requests**

The State reserves the right to request from time to time, any changes to the requirements and specifications of the Contract and the work to be performed by the Contractor under the Contract. During the course of ordinary business, it may become necessary for the State to discontinue certain business practices or create Additional Services/Deliverables. At a minimum, to the extent applicable, the State would like the Contractor to provide a detailed outline of all work to be done, including tasks necessary to accomplish the services/deliverables, timeframes, listing of key personnel assigned, estimated hours for each individual per task, and a complete and detailed cost justification.

If the State requests or directs the Contractor to perform any Services/Deliverables that are outside the scope of the Contractor's responsibilities under the Contract ("New Work"), the Contractor must notify the State promptly, and before commencing performance of the requested activities, that it believes the requested activities are New Work. If the Contractor fails to notify the State before commencing performance of the requested activities, any such activities performed before notice is given by the Contractor shall be conclusively considered to be in-scope Services/Deliverables, not New Work.

If the State requests or directs the Contractor to perform any services or provide deliverables that are consistent with and similar to the Services/Deliverables being provided by the Contractor under the Contract, but which the Contractor reasonably and in good faith believes are not included within the Statements of Work, then before performing such services or providing such deliverables, the Contractor shall notify the State in writing that it considers the services or deliverables to be an Additional Service/Deliverable for which the Contractor should receive additional compensation. If the Contractor does not so notify the State, the Contractor shall have no right to claim thereafter that it is entitled to additional compensation for performing that service or providing that deliverable. If the Contractor does so notify the State, then such a service or deliverable shall be governed by the Change Request procedure in this Section.
In the event prices or service levels are not acceptable to the State, the Additional Services or New Work shall be subject to competitive bidding based upon the specifications.

(a) Change Requests

(i) State Requests
If the State should require Contractor to perform New Work, Additional Services or make changes to the Services that would affect the Contract completion schedule or the amount of compensation due Contractor (a "Change"), the State shall submit a written request for Contractor to furnish a proposal for carrying out the requested Change (a "Change Request").

(ii) Contractor Recommendations
Contractor shall be entitled to propose a Change to the State, on its own initiative, should it be of the opinion that this would benefit the Contract.

(iii) Upon receipt of a Change Request or on its own initiative, Contractor shall examine the implications of the requested Change on the technical specifications, Contract schedule and price of the Deliverables and Services and shall submit to the State without undue delay a written proposal for carrying out the Change. Contractor's proposal will include any associated changes in the technical specifications, Contract schedule and price and method of pricing of the Services. If the Change is to be performed on a time and materials basis, the Amendment Labor Rates shall apply to the provision of such Services. If Contractor provides a written proposal and should Contractor be of the opinion that a requested Change is not to be recommended, it shall communicate its opinion to the State but shall nevertheless carry out the Change as specified in the written proposal if the State directs it to do so.

(iv) By giving Contractor written notice within a reasonable time, the State shall be entitled to accept a Contractor proposal for Change, to reject it or to reach another agreement with Contractor. Should the parties agree on carrying out a Change, a written Contract Change Notice shall be prepared and issued under this Contract, describing the Change and its effects on the Services and any affected components of this Contract (a "Contract Change Notice").

(v) No proposed Change shall be performed until the proposed Change has been specified in a duly executed Contract Change Notice issued by the Department of Management and Budget, Office of Purchasing Operations.

(vi) If the State requests or directs Contractor to perform any activities that Contractor believes constitute a Change, Contractor must notify the State that it believes the requested activities are a Change prior to commencing the performance of the requested activities. If Contractor fails to so notify the State prior to commencing performance of the requested activities, such activities shall be considered to be performed gratuitously by Contractor, and Contractor shall not have any right thereafter to assert any claim for additional compensation or time for the performance of such activities. If Contractor commences performance of gratuitous services outside the scope of this Contract and subsequently elects to stop performing such out-of-scope services, Contractor must, at the request of the State, back out or reverse any changes resulting from such performance that would adversely affect the Contract.

**2.107 Management Tools**

Contractor will use an automated tool for planning, monitoring and tracking the Contract's progress. In addition, Contractor shall use automated project management tools as reasonably necessary to perform the Services, which tools shall include the capability to produce through the end of the Contract: (i) staffing tables with names of personnel assigned to Contract tasks, (ii) project plans showing tasks, subtasks, Deliverables and the resources required and allocated to each (including detailed plans for all Services to be performed within the next sixty (60) days, updated semi-monthly) and (iii) graphs showing critical events, dependencies and decision points during the course of the Contract. Any tool(s) used by Contractor for such purposes must produce information of a type and in a manner and format that will support reporting in compliance with the State's standard to the extent such information is described with reasonable detail in the Statements of Work and to the extent the related work is of sufficient project complexity and duration to warrant such reporting.

**2.110 Records and Inspections**

**2.111 Records and Inspections**

The Contractor agrees that the State may, upon 24-hour notice, perform an audit at Contractor's location(s) to determine if the Contractor is complying with the requirements of the Contract. The Contractor agrees to cooperate with the State during the audit and produce all records and documentation that verifies compliance with the Contract requirements.

**2.112 Errors**

(a) If the audit demonstrates any errors in the statements provided to the State, then the amount in error shall be reflected as a credit or debit on the next invoice and in subsequent invoices until the amount is paid or refunded in full. However, a credit or debit may not be carried for more than four (4) quarterly statements. If a balance remains after four (4) quarterly statements, then the remaining amount will be due as a payment or refund within 45 days of the last quarterly statement that the balance appeared on or termination of the contract, whichever is earlier.

(b) In addition to other available remedies, the difference between the payment received and the correct payment amount is greater than 10%, then the Contractor shall pay all of the reasonable costs of the audit.

### 2.120 State Responsibilities

### 2.121 State Performance Obligations

(a) Equipment and Other Resources. To facilitate Contractor's performance of the Services/Deliverables, the State shall provide to Contractor such equipment and resources as identified in the Statements of Work or other Contract Exhibits as items to be provided by the State.

(b) Facilities. The State shall designate space as long as it is available and as provided in the Statement of Work, to house Contractor's personnel whom the parties agree will perform the Services/Deliverables at State facilities (collectively, the "State Facilities"). Contractor shall have reasonable access to, and unless agreed otherwise by the parties in writing shall observe and comply with all rules and regulations relating to, each of the State Facilities (including hours of operation) used by Contractor in the course of providing the Services. Contractor agrees that it will not, without the prior written consent of the State, use any State Facilities or access any State information systems provided for Contractor's use, or to which Contractor otherwise gains access in the course of performing the Services, for any purpose other than providing the Services to the State.

(c) Return. Contractor shall be responsible for returning to the State any State-furnished equipment, facilities and other resources when no longer required for the Contract in the same condition as when provided by the State, reasonable wear and tear excepted.

(d) Except as otherwise provided in **Section 2.220**, the State's failure to perform its responsibilities as set forth in this Contract shall not be deemed to be grounds for termination by Contractor. However, Contractor will not be liable for any default or delay in the performance of its obligations under this Contract to the extent such default or delay is caused by nonperformance of the State's obligations under this Contract, provided Contractor provides the State with reasonable written notice of such nonperformance and Contractor uses commercially reasonable efforts to perform notwithstanding the State's failure to perform. In addition, if the State's nonperformance of its responsibilities under this Contract materially increases the time required for Contractor's performance or Contractor's cost of performance, Contractor shall be entitled to seek an equitable extension via the Change Request process described in **Section 2.106**.

### 2.130 Security

### 2.131 Background Checks

The Contractor shall authorize the investigation of its personnel proposed to have access to State facilities and systems on a case by case basis. The scope of the background check is at the discretion of the State and the results will be used to determine Contractor personnel eligibility for working within State facilities and systems. Such investigations will include Michigan State Police Background checks (ICHAT) and may include the National Crime Information Center (NCIC) Finger Prints. Proposed Contractor personnel may be required to complete and submit an RI-8 Fingerprint Card for the NCIC Finger Print Check. Any request for background checks will be initiated by the State and will be reasonably related to the type of work requested.

All Contractor personnel will also be expected to comply with the State's security and acceptable use policies for State IT equipment and resources. See http://www.michigan.gov/ditservice/0,1607,7-179-25781-73760--,00.html. Furthermore, Contractor personnel will be expected to agree to the State's security and acceptable use policies before the Contractor personnel will be accepted as a resource to perform work for the State. It is expected the Contractor will present these documents to the prospective employee before the Contractor presents the individual to the State as a proposed resource. Contractor staff will be expected to comply with all Physical Security procedures in place within the facilities where they are working.

### 2.140 Reserved

## 2.150 Confidentiality

### 2.151 Freedom of Information

All information in any proposal submitted to the State by Contractor and this Contract is subject to the provisions of the Michigan Freedom of Information Act, 1976 Public Act No. 442, as amended, MCL 15.231, et seq (the "FOIA").

### 2.152 Confidentiality

Contractor and the State each acknowledge that the other possesses and will continue to possess confidential information that has been developed or received by it. As used in this Section, "Confidential Information" of Contractor shall mean all non-public proprietary information of Contractor (other than Confidential Information of the State as defined below) which is marked confidential, restricted, proprietary or with a similar designation. "Confidential Information" of the State shall mean any information which is retained in confidence by the State (or otherwise required to be held in confidence by the State pursuant to applicable federal, state and local laws and regulations) or which, in the case of tangible materials provided to Contractor by the State pursuant to its performance under this Contract, is marked as confidential, proprietary or with a similar designation by the State. In the case of information of either Contractor or the State "Confidential Information" shall exclude any information (including this Contract) that is publicly available pursuant to the Michigan FOIA.

### 2.153 Protection of Confidential Information

The State and Contractor will each use at least the same degree of care to prevent disclosing to third parties the Confidential Information of the other as it employs to avoid unauthorized disclosure, publication or dissemination of its own confidential information of like character, but in no event less than reasonable care. Neither Contractor nor the State will (i) make any use of the Confidential Information of the other except as contemplated by this Contract, (ii) acquire any right in or assert any lien against the Confidential Information of the other, or (iii) if requested to do so, refuse for any reason to promptly return the other party's Confidential Information to the other party. Each party will limit disclosure of the other party's Confidential Information to employees and Subcontractors who must have access in order to fulfill the purposes of this Contract. Disclosure to, and use by, a Subcontractor is permissible where (A) use of a Subcontractor is authorized under this Contract, (B) such disclosure is necessary or otherwise naturally occurs in connection with work that is within such Subcontractor's scope of responsibility, and (C) Contractor obligates the Subcontractor in a written Contract to maintain the State's Confidential Information in confidence. At the State's request, any employee of Contractor and of any Subcontractor having access or continued access to the State's Confidential Information may be required to execute an acknowledgment that the employee has been advised of Contractor's and the Subcontractor's obligations under this Section and of the employee's obligation to Contractor or Subcontractor, as the case may be, to protect such Confidential Information from unauthorized use or disclosure.

### 2.154 Exclusions

Notwithstanding the foregoing, the provisions of this Section will not apply to any particular information which the State or Contractor can demonstrate (i) was, at the time of disclosure to it, in the public domain; (ii) after disclosure to it, is published or otherwise becomes part of the public domain through no fault of the receiving party; (iii) was in the possession of the receiving party at the time of disclosure to it without an obligation of confidentiality; (iv) was received after disclosure to it from a third party who had a lawful right to disclose such information to it without any obligation to restrict its further disclosure; or (v) was independently developed by the receiving party without reference to Confidential Information of the furnishing party. Further, the provisions of this Section will not apply to any particular Confidential Information to the extent the receiving party is required by law to disclose such Confidential Information, provided that the receiving party (i) promptly provides the furnishing party with notice of the legal request, and (ii) assists the furnishing party in resisting or limiting the scope of such disclosure as reasonably requested by the furnishing party.

### 2.155 No Implied Rights

Nothing contained in this Section shall be construed as obligating a party to disclose any particular Confidential Information to the other party, or as granting to or conferring on a party, expressly or impliedly, any right or license to the Confidential Information of the other party.

**2.156 Remedies**

Each party acknowledges that, if it breaches (or attempts or threatens to breach) its obligations under this Section, the other party may be irreparably harmed. Accordingly, if a court of competent jurisdiction should find that a party has breached (or attempted or threatened to breach) any such obligations, the non-breaching party shall be entitled to seek an injunction preventing such breach (or attempted or threatened breach).

**2.157 Security Breach Notification**

In the event of a breach of this Section, Contractor shall take (i) prompt corrective action to cure any such deficiencies and (ii) any action pertaining to such unauthorized disclosure required by applicable federal and state laws and regulations. Contractor and the State will cooperate to mitigate, to the extent practicable, the effects of any breach, intrusion, or unauthorized use or disclosure. Contractor shall report to the State in writing any use or disclosure of Confidential Information, whether suspected or actual, other than as provided for by the Contract within 10 days of becoming aware of such use or disclosure or such shorter time period as is reasonable under the circumstances.

**2.158 Survival**

The parties' respective obligations under this Section shall survive the termination or expiration of this Contract for any reason.

**2.159 Destruction of Confidential Information**

Promptly upon termination or cancellation of the Contract for any reason, Contractor shall certify to the State that Contractor has destroyed all State Confidential Information.

**2.160 Proprietary Rights –**

**2.161a Ownership – Reserved**

**2.161b Cross-License – Reserved**

**2.161c License – Reserved**

**2.162 Source Code Escrow - Reserved**

**2.163 Rights in Data**

(a) The State will be and remain the owner of all data made available by the State to Contractor or its agents, Subcontractors or representatives pursuant to the Contract. Contractor will not use the State's data for any purpose other than providing the Services, nor will any part of the State's data be disclosed, sold, assigned, leased or otherwise disposed of to the general public or to specific third parties or commercially exploited by or on behalf of Contractor, nor will any employee of Contractor other than those on a strictly need to know basis have access to the State's data. Contractor will not possess or assert any lien or other right against the State's data. Without limiting the generality of this Section, Contractor shall only use personally identifiable information as strictly necessary to provide the Services and shall disclose such information only to its employees who have a strict need to know such information. Contractor shall comply at all times with all laws and regulations applicable to such personally identifiable information.

(b) The State is and shall remain the owner of all State-specific data pursuant to the Contract. The State may use the data provided by the Contractor for any purpose. The State will not possess or assert any lien or other right against the Contractor's data. Without limiting the generality of this Section, the State shall only use personally identifiable information as strictly necessary to utilize the Services and shall disclose such information only to its employees who have a strict need to know such information, except as provided by law. The State shall comply at all times with all laws and regulations applicable to such personally identifiable information. Other material developed and provided to the State shall remain the State's sole and exclusive property.

**2.164 Ownership of Materials**

State and Contractor will continue to own their respective proprietary technologies developed before entering into the Contract. Any hardware bought through the Contractor by the State, and paid for by the State, will be owned by the State. Any software licensed through the Contractor and sold to the State, will be licensed directly to the State.

**2.165 Standard Software – Reserved**

**2.166 Pre-existing Materials for Custom Software Deliverables – Reserved**

**2.167 General Skills**

Notwithstanding anything to the contrary in this Section, each party, its Subcontractors and their personnel shall be free to use and employ its and their general skills, know-how and expertise, and to use, disclose and employ any generalized ideas, concepts, know-how, methods, techniques or skills gained or learned during the course of performing the Services, so long as it or they acquire and apply the foregoing without disclosure of any confidential or proprietary information of the other party.

**2.170 Warranties and Representations**

**2.171 Warranties and Representations**

The Contractor represents and warrants:

(a) It is capable in all respects of fulfilling and shall fulfill all of its obligations under this Contract. The performance of all obligations under this Contract shall be provided in a timely, professional, and workman-like manner and shall meet the performance and operational standards required under this Contract.

(b) The Contract Appendices, Attachments and Exhibits identify the equipment and software and services necessary for the Deliverable(s) to perform and Services to operate in compliance with the Contract's requirements and other standards of performance.

(c) It is the lawful owner or licensee of any Deliverable licensed or sold to the State by Contractor or developed by Contractor under this Contract, and Contractor has all of the rights necessary to convey to the State the ownership rights or licensed use, as applicable, of any and all Deliverables. None of the Deliverables provided by Contractor to the State under this Contract, nor their use by the State, will infringe the patent, copyright, trade secret, or other proprietary rights of any third party.

(d) If, under this Contract, Contractor procures any equipment, software or other Deliverable for the State (including equipment, software and other Deliverables manufactured, re-marketed or otherwise sold by Contractor under Contractor's name), then in addition to Contractor's other responsibilities with respect to such items in this Contract, Contractor shall assign or otherwise transfer to the State or its designees, or afford the State the benefits of, any manufacturer's warranty for the Deliverable.

(e) The contract signatory has the power and authority, including any necessary corporate authorizations, necessary to enter into this Contract, on behalf of Contractor.

(f) It is qualified and registered to transact business in all locations where required.

(g) Neither the Contractor nor any Affiliates, nor any employee of either, has, shall have, or shall acquire, any contractual, financial, business, or other interest, direct or indirect, that would conflict in any manner or degree with Contractor's performance of its duties and responsibilities to the State under this Contract or otherwise create an appearance of impropriety with respect to the award or performance of this Agreement. Contractor shall notify the State within two (2) days of any such interest that may be incompatible with the interests of the State.

(h) Neither Contractor nor any Affiliates, nor any employee of either has accepted or shall accept anything of value based on an understanding that the actions of the Contractor or Affiliates or employee on behalf of the State would be influenced. Contractor shall not attempt to influence any State employee by the direct or indirect offer of anything of value.

(i) Neither Contractor nor any Affiliates, nor any employee of either has paid or agreed to pay any person, other than bona fide employees and consultants working solely for Contractor or such Affiliate, any fee, commission, percentage, brokerage fee, gift, or any other consideration, contingent upon or resulting from the award or making of this Contract.

(j) The prices proposed by Contractor were arrived at independently, without consultation, communication, or agreement with any other bidder for the purpose of restricting competition; the prices quoted were not knowingly disclosed by Contractor to any other bidder; and no attempt was made by Contractor to induce any other person to submit or not submit a proposal for the purpose of restricting competition.

(k) All financial statements, reports, and other information furnished by Contractor to the State as part of its response to the RFP or otherwise in connection with the award of this Contract fairly and accurately represent the business, properties, financial condition, and results of operations of Contractor as of the respective dates, or for the respective periods, covered by such financial statements, reports, other information. Since the respective dates or periods covered by such financial statements, reports, or other information, there have been no material adverse change in the business, properties, financial condition, or results of operations of Contractor.

(m) All written information furnished to the State by or behalf of Contractor in connection with this Contract, including its bid, it true, accurate, and complete, and contains no untrue statement of material fact or omits any material fact necessary to make such information not misleading.

(n) It is not in material default or breach of any other contract or agreement that it may have with the State or any of its departments, commissions, boards, or agencies. Contractor further represents and warrants that it has not been a party to any contract with the State or any of its departments that was terminated by the State or such department within the previous five (5) years for the reason that Contractor failed to perform or otherwise breached an obligation of such contract.

**2.172 Software Warranties – Reserved**

**2.173 Equipment Warranty – Reserved**

**2.174 Physical Media Warranty – Reserved**

**2.175a DISCLAIMER – Reserved**

**2.175b Standard Warranties – Reserved**

**2.176 Consequences for Breach – Reserved**

**2.180 Insurance**

**2.181 Liability Insurance**

(a) Liability Insurance

The Contractor is required to provide proof of the minimum levels of insurance coverage as indicated below. The purpose of this coverage shall be to protect the State from claims which may arise out of or result from the Contractor's performance of services under the terms of this Contract, whether such services are performed by the Contractor, or by any subcontractor, or by anyone directly or indirectly employed by any of them, or by anyone for whose acts they may be liable.

The Contractor waives all rights against the State of Michigan, its departments, divisions, agencies, offices, commissions, officers, employees and agents for recovery of damages to the extent these damages are covered by the insurance policies the Contractor is required to maintain pursuant to this Contract.

All insurance coverages provided relative to this Contract/Purchase Order are PRIMARY and NON-CONTRIBUTING to any comparable liability insurance (including self-insurances) carried by the State.

The insurance shall be written for not less than any minimum coverage specified in this Contract or required by law, whichever is greater.

The insurers selected by Contractor shall have an A.M. Best rating of A or better, or as otherwise approved in writing by the State, or if such ratings are no longer available, with a comparable rating from a recognized insurance rating agency. All policies of insurance required in this Contract shall be issued by companies that have been approved to do business in the State. See http://www.mi.gov/cis/0,1607,7-154-10555_22535---,00.html.

Where specific limits are shown, they are the minimum acceptable limits. If Contractor's policy contains higher limits, the State shall be entitled to coverage to the extent of such higher limits.

Before the Contract is signed by both parties or before the purchase order is issued by the State, the Contractor must furnish to the Director of Purchasing Operations, certificate(s) of insurance verifying insurance coverage ("Certificates"). The Certificate must be on the standard "accord" form or equivalent. **THE CONTRACT OR PURCHASE ORDER NO. MUST BE SHOWN ON THE CERTIFICATE OF INSURANCE TO ASSURE CORRECT FILING.** All Certificate(s) are to be prepared and submitted by the Insurance Provider. All Certificate(s) shall contain a provision indicating that coverages afforded under the policies WILL NOT BE CANCELLED, MATERIALLY CHANGED, OR NOT RENEWED without THIRTY (30) days prior written notice, except for ten (10) days for non-payment of premium, having been given to the Director of Purchasing Operations, Department of Management and Budget. The notice must include the Contract or Purchase Order number affected and be mailed to: Director, Purchasing Operations, Department of Management and Budget, P.O. Box 30026, Lansing, Michigan 48909. Failure to provide evidence of coverage, may, at the State's sole option, result in this Contract's termination.

The Contractor is required to pay for and provide the type and amount of insurance checked ☑ below:

☑ 1. Commercial General Liability with the following minimum coverage:

$2,000,000 General Aggregate Limit other than Products/Completed Operations
$2,000,000 Products/Completed Operations Aggregate Limit
$1,000,000 Personal & Advertising Injury Limit
$1,000,000 Each Occurrence Limit
$500,000 Fire Damage Limit (any one fire)

The Contractor must list the State of Michigan, its departments, divisions, agencies, offices, commissions, officers, employees and agents as ADDITIONAL INSUREDS on the Commercial General Liability certificate. The Contractor also agrees to provide evidence that insurance policies contain a waiver of subrogation by the insurance company.

☑ 2. If a motor vehicle is used to provide services or products under this Contract, the Contractor must have vehicle liability insurance on any auto including owned, hired and non-owned vehicles used in Contractor's business for bodily injury and property damage as required by law.

The Contractor must list the State of Michigan, its departments, divisions, agencies, offices, commissions, officers, employees and agents as ADDITIONAL INSUREDS on the vehicle liability certificate. The Contractor also agrees to provide evidence that insurance policies contain a waiver of subrogation by the insurance company.

☑ 3. Workers' compensation coverage must be provided in accordance with applicable laws governing the employees and employers work activities in the state of the Contractor's domicile. If the applicable coverage is provided by a self-insurer, proof must be provided of approved self-insured authority by the jurisdiction of domicile. For employees working outside of the state of qualification, Contractor must provide appropriate certificates of insurance proving mandated coverage levels for the jurisdictions where the employees' activities occur.

Any certificates of insurance received must also provide a list of states where the coverage is applicable.

The Contractor also agrees to provide evidence that insurance policies contain a waiver of subrogation by the insurance company. This provision shall not be applicable where prohibited or limited by the laws of the jurisdiction in which the work is to be performed.

☑ 4. Employers liability insurance with the following minimum limits:
$100,000 each accident
$100,000 each employee by disease
$500,000 aggregate disease

☐ 5. Employee Fidelity, including Computer Crimes, insurance naming the State as a loss payee, providing coverage for direct loss to the State and any legal liability of the State arising out of or related to fraudulent or dishonest acts committed by the employees of Contractor or its Subcontractors, acting alone or in collusion with others, in a minimum amount of one million dollars ($1,000,000.00) with a maximum deductible of fifty thousand dollars ($50,000.00).

☐ 6. Umbrella or Excess Liability Insurance in a minimum amount of ten million dollars ($10,000,000.00), which shall apply, at a minimum, to the insurance required in Subsection 1 (Commercial General Liability) above.

☐ 7. Professional Liability (Errors and Omissions) Insurance with the following minimum coverage: three million dollars ($3,000,000.00) each occurrence and three million dollars ($3,000,000.00) annual aggregate.

☐ 8. Fire and Personal Property Insurance covering against any loss or damage to the office space used by Contractor for any reason under this Contract, and the equipment, software and other contents of such office space, including without limitation, those contents used by Contractor to provide the Services to the State, up to the replacement value thereof, where such office space and its contents are under the care, custody and control of Contractor. Such policy shall cover all risks of direct physical loss or damage, including without limitation, flood and earthquake coverage and coverage for computer hardware and software. The State shall be endorsed on the policy as a loss payee as its interests appear.

(b) Subcontractors
Except where the State has approved in writing a Contractor subcontract with other insurance provisions, Contractor shall require all of its Subcontractors under this Contract to purchase and maintain the insurance coverage as described in this Section for the Contractor in connection with the performance of work by those Subcontractors. Alternatively, Contractor may include any Subcontractors under Contractor's insurance on the coverage required in this Section. Subcontractor(s) shall fully comply with the insurance coverage required in this Section. Failure of Subcontractor(s) to comply with insurance requirements does not limit Contractor's liability or responsibility.

(c) Certificates of Insurance and Other Requirements
Contractor shall furnish to the Office of Purchasing Operations certificate(s) of insurance verifying insurance coverage or providing satisfactory evidence of self-insurance as required in this Section (the "Certificates"). Before the Contract is signed, and not less than 20 days before the insurance expiration date every year thereafter, the Contractor shall provide evidence that the State and its agents, officers and employees are listed as additional insureds under each commercial general liability and commercial automobile liability policy. In the event the State approves the representation of the State by the insurer's attorney, the attorney may be required to be designated as a Special Assistant Attorney General by the Attorney General of the State of Michigan.

Contractor shall maintain all required insurance coverage throughout the term of the Contract and any extensions thereto and, in the case of claims-made Commercial General Liability policies, shall secure tail coverage for at least three (3) years following the expiration or termination for any reason of this Contract. The minimum limits of coverage specified above are not intended, and shall not be construed, to limit any liability or indemnity of Contractor under this Contract to any indemnified party or other persons. Contractor shall be responsible for all deductibles with regard to such insurance. If Contractor fails to pay any premium for required insurance as specified in this Contract, or if any insurer cancels or significantly reduces any required insurance as specified in this Contract without the State's written consent, at the State's election (but without any obligation to do so) after the State has given Contractor at least 30 days written notice, the State may pay such premium or procure similar insurance coverage from another company or companies; and at the State's election, the State may deduct the entire cost (or part thereof) from any payment due Contractor, or Contractor shall pay the entire cost (or any part thereof) upon demand by the State.

**2.190 Indemnification**

**2.191 Indemnification**

(a) General Indemnification
To the extent permitted by law, the Contractor shall indemnify, defend and hold harmless the State from liability, including all claims and losses, and all related costs and expenses (including reasonable attorneys' fees and costs of investigation, litigation, settlement, judgments, interest and penalties), accruing or resulting to any person, firm or corporation that may be injured or damaged by the Contractor in the performance of this Contract and that are attributable to the negligence or tortious acts of the Contractor or any of its subcontractors, or by anyone else for whose acts any of them may be liable.

(b) Code Indemnification
To the extent permitted by law, the Contractor shall indemnify, defend and hold harmless the State from any claim, loss, or expense arising from Contractor's breach of the No Surreptitious Code Warranty.

(c) Employee Indemnification
In any and all claims against the State of Michigan, its departments, divisions, agencies, sections, commissions, officers, employees and agents, by any employee of the Contractor or any of its subcontractors, the indemnification obligation under the Contract shall not be limited in any way by the amount or type of damages, compensation or benefits payable by or for the Contractor or any of its subcontractors under worker's disability compensation acts, disability benefit acts or other employee benefit acts. This indemnification clause is intended to be comprehensive. Any overlap in provisions, or the fact that greater specificity is provided as to some categories of risk, is not intended to limit the scope of indemnification under any other provisions.

(d) Patent/Copyright Infringement Indemnification
To the extent permitted by law, the Contractor shall indemnify, defend and hold harmless the State from and against all losses, liabilities, damages (including taxes), and all related costs and expenses (including reasonable attorneys' fees and costs of investigation, litigation, settlement, judgments, interest and penalties) incurred in connection with any action or proceeding threatened or brought against the State to the extent that such action or proceeding is based on a claim that any piece of equipment, software, commodity or service supplied by the Contractor or its subcontractors, or the operation of such equipment, software, commodity or service, or the use or reproduction of any documentation provided with such equipment, software, commodity or service infringes any United States patent, copyright, trademark or trade secret of any person or entity, which is enforceable under the laws of the United States.

In addition, should the equipment, software, commodity, or service, or its operation, become or in the State's or Contractor's opinion be likely to become the subject of a claim of infringement, the Contractor shall at the Contractor's sole expense (i) procure for the State the right to continue using the equipment, software, commodity or service or, if such option is not reasonably available to the Contractor, (ii) replace or modify to the State's satisfaction the same with equipment, software, commodity or service of equivalent function and performance so that it becomes non-infringing, or, if such option is not reasonably available to Contractor,

(iii) accept its return by the State with appropriate credits to the State against the Contractor's charges and reimburse the State for any losses or costs incurred as a consequence of the State ceasing its use and returning it.

Notwithstanding the foregoing, the Contractor shall have no obligation to indemnify or defend the State for, or to pay any costs, damages or attorneys' fees related to, any claim based upon (i) equipment developed based on written specifications of the State; or (ii) use of the equipment in a configuration other than implemented or approved in writing by the Contractor, including, but not limited to, any modification of the equipment by the State; or (iii) the combination, operation, or use of the equipment with equipment or software not supplied by the Contractor under this Contract.

**2.192 Continuation of Indemnification Obligations**

The Contractor's duty to indemnify pursuant to this Section continues in full force and effect, notwithstanding the expiration or early cancellation of the Contract, with respect to any claims based on facts or conditions that occurred prior to expiration or cancellation.

**2.193 Indemnification Procedures**

The procedures set forth below shall apply to all indemnity obligations under this Contract.

(a) After receipt by the State of notice of the action or proceeding involving a claim in respect of which it will seek indemnification, the State shall promptly notify Contractor of such claim in writing and take or assist Contractor in taking, as the case may be, any reasonable action to avoid the imposition of a default judgment against Contractor. No failure to notify Contractor shall relieve Contractor of its indemnification obligations except to the extent that Contractor can demonstrate damages attributable to such failure. Within 10 days following receipt of written notice from the State relating to any claim, Contractor shall notify the State in writing whether Contractor agrees to assume control of the defense and settlement of that claim (a "Notice of Election"). After notifying Contractor of a claim and prior to the State receiving Contractor's Notice of Election, the State shall be entitled to defend against the claim, at Contractor's expense, and Contractor will be responsible for any reasonable costs incurred by the State in defending against the claim during such period.

(b) If Contractor delivers a Notice of Election relating to any claim: (i) the State shall be entitled to participate in the defense of such claim and to employ counsel at its own expense to assist in the handling of such claim and to monitor and advise the State about the status and progress of the defense; (ii) Contractor shall, at the request of the State, demonstrate to the reasonable satisfaction of the State, Contractor's financial ability to carry out its defense and indemnity obligations under this Contract; (iii) Contractor shall periodically advise the State about the status and progress of the defense and shall obtain the prior written approval of the State before entering into any settlement of such claim or ceasing to defend against such claim and (iv) to the extent that any principles of Michigan governmental or public law may be involved or challenged, the State shall have the right, at its own expense, to control the defense of that portion of such claim involving the principles of Michigan governmental or public law. Notwithstanding the foregoing, the State may retain control of the defense and settlement of a claim by written notice to Contractor given within 10 days after the State's receipt of Contractor's information requested by the State pursuant to clause (ii) of this paragraph if the State determines that Contractor has failed to demonstrate to the reasonable satisfaction of the State Contractor's financial ability to carry out its defense and indemnity obligations under this Section. Any litigation activity on behalf of the State of Michigan, or any of its subdivisions pursuant to this Section, must be coordinated with the Department of Attorney General. In the event the insurer's attorney represents the State pursuant to this Section, the insurer's attorney may be required to be designated as a Special Assistant Attorney General by the Attorney General of the State of Michigan.

(c) If Contractor does not deliver a Notice of Election relating to any claim of which it is notified by the State as provided above, the State shall have the right to defend the claim in such manner as it may deem appropriate, at the cost and expense of Contractor. If it is determined that the claim was one against which Contractor was required to indemnify the State, upon request of the State, Contractor shall promptly reimburse the State for all such reasonable costs and expenses.

## 2.200 Limits of Liability and Excusable Failure

### 2.201 Limits of Liability

The Contractor's liability for damages to the State shall be limited to two times the value of the Contract or $200,000 (for low risk contracts – Select a higher amount for moderate to high risk contracts) which ever is higher. The foregoing limitation of liability shall not apply to claims for infringement of United States patent, copyright, trademarks or trade secrets; to claims for personal injury or damage to property caused by the gross negligence or willful misconduct of the Contractor; to claims covered by other specific provisions of this Contract calling for liquidated damages; or to court costs or attorney's fees awarded by a court in addition to damages after litigation based on this Contract.

The State's liability for damages to the Contractor shall be limited to the value of the Contract.

Neither the Contractor nor the State shall be liable to each other, regardless of the form of action, for consequential, incidental, indirect, or special damages. This limitation of liability shall not apply to claims for infringement of United States patent, copyright, trademark or trade secrets; to claims for personal injury or damage to property caused by the gross negligence or willful misconduct of the Contractor; to claims covered by other specific provisions of this Contract calling for liquidated damages; or to court costs or attorney's fees awarded by a court in addition to damages after litigation based on this Contract.

### 2.202 Excusable Failure

Neither party will be liable for any default, damage or delay in the performance of its obligations under the Contract to the extent such default, damage or delay is caused by government regulations or requirements (executive, legislative, judicial, military or otherwise), power failure, electrical surges or current fluctuations, lightning, earthquake, war, water or other forces of nature or acts of God, delays or failures of transportation, equipment shortages, suppliers' failures, or acts or omissions of common carriers, fire; riots, civil disorders; strikes or other labor disputes, embargoes; injunctions (provided the injunction was not issued as a result of any fault or negligence of the party seeking to have its default or delay excused); or any other cause beyond the reasonable control of such party; provided the non-performing party and its Subcontractors are without fault in causing such default or delay, and such default or delay could not have been prevented by reasonable precautions and cannot reasonably be circumvented by the non-performing party through the use of alternate sources, workaround plans or other means, including disaster recovery plans.

In such event, the non-performing party will be excused from any further performance or observance of the obligation(s) so affected for as long as such circumstances prevail and such party continues to use its commercially reasonable efforts to recommence performance or observance whenever and to whatever extent possible without delay and provided further that such party promptly notifies the other party in writing of the inception of the excusable failure occurrence, and also of its abatement or cessation.

If any of the above-enumerated circumstances substantially prevent, hinder, or delay Contractor's performance of the Services/provision of Deliverables for more than 10 Business Days, and the State determines that performance is not likely to be resumed within a period of time that is satisfactory to the State in its reasonable discretion, then at the State's option: (a) the State may procure the affected Services/Deliverables from an alternate source, and the State shall not be liable for payment for the unperformed Services/ Deliverables not provided under the Contract for so long as the delay in performance shall continue; (b) the State may terminate any portion of the Contract so affected and the charges payable there under shall be equitably adjusted to reflect those Services/Deliverables terminated; or (c) the State may terminate the affected Statement of Work without liability to Contractor as of a date specified by the State in a written notice of termination to Contractor, except to the extent that the State shall pay for Services/Deliverables provided through the date of termination.

Contractor will not have the right to any additional payments from the State as a result of any Excusable Failure occurrence or to payments for Services not rendered/Deliverables not provided as a result of the Excusable Failure condition. Defaults or delays in performance by Contractor which are caused by acts or omissions of its Subcontractors will not relieve Contractor of its obligations under the Contract except to the extent that a Subcontractor is itself subject to an Excusable Failure condition described above and Contractor cannot reasonably circumvent the effect of the Subcontractor's default or delay in performance through the use of alternate sources, workaround plans or other means.

**2.203 Disaster Recovery**

Contractor and the State recognize that the State provides essential services in times of natural or man-made disasters. Therefore, except as so mandated by Federal disaster response requirements, Contractor personnel dedicated to providing Services/Deliverables under this Contract will provide the State with priority service for repair and work around in the event of a natural or manmade disaster.

**2.210 Termination/Cancellation by the State**

The State may terminate this Contract without further liability or penalty to the State, its departments, divisions, agencies, offices, commissions, officers, agents and employees for any of the following reasons:

**2.211 Termination for Cause**

(a) In the event that Contractor breaches any of its material duties or obligations under this Contract (including a Chronic Failure to meet any particular SLA as defined in **Section 2.076**), which are either not capable of or subject to being cured, or are not cured within the time period specified in the written notice of breach provided by the State (such time period not to be less than 30days), or pose a serious and imminent threat to the health and safety of any person, or the imminent loss, damage or destruction of any real or tangible personal property, the State may, having provided written notice of termination to Contractor, terminate this Contract in whole or in part, for cause, as of the date specified in the notice of termination.

(b) In the event that this Contract is terminated for cause, in addition to any legal remedies otherwise available to the State by law or equity, Contractor shall be responsible for all costs incurred by the State in terminating this Contract, including but not limited to, State administrative costs, reasonable attorneys' fees and court costs, and any reasonable additional costs the State may incur to procure the Services/Deliverables required by this Contract from other sources. Re-procurement costs shall not be considered by the parties to be consequential, indirect or incidental damages, and shall not be excluded by any other terms otherwise included in this Contract, provided such costs are not in excess of 50% more than the prices for such Service/Deliverables provided under this Contract.

(c) In the event the State chooses to partially terminate this Contract for cause, charges payable under this Contract will be equitably adjusted to reflect those Services/Deliverables that are terminated and the State shall pay for all Services/Deliverables for which Final Acceptance has been granted provided up to the termination date. Services and related provisions of this Contract that are terminated for cause shall cease on the effective date of the termination.

(d) In the event this Contract is terminated for cause pursuant to this Section, and it is determined, for any reason, that Contractor was not in breach of contract pursuant to the provisions of this section, that termination for cause shall be deemed to have been a termination for convenience, effective as of the same date, and the rights and obligations of the parties shall be limited to that otherwise provided in this Contract for a termination for convenience.

**2.212 Termination for Convenience**

The State may terminate this Contract for its convenience, in whole or part, if the State determines that such a termination is in the State's best interest. Reasons for such termination shall be left to the sole discretion of the State and may include, but not necessarily be limited to (a) the State no longer needs the Services or products specified in the Contract, (b) relocation of office, program changes, changes in laws, rules, or regulations make implementation of the Services no longer practical or feasible, (c) unacceptable prices for Additional Services or New Work requested by the State, or (d) falsification or misrepresentation, by inclusion or non-inclusion, of information material to a response to any RFP issued by the State. The State may terminate this Contract for its convenience, in whole or in part, by giving Contractor written notice at least thirty (30) days prior to the date of termination. If the State chooses to terminate this Contract in part, the charges payable under this Contract shall be equitably adjusted to reflect those Services/Deliverables that are terminated. Services and related provisions of this Contract that are terminated for cause shall cease on the effective date of the termination.

**2.213 Non-Appropriation**

(a) Contractor acknowledges that, if this Contract extends for several fiscal years, continuation of this Contract is subject to appropriation or availability of funds for this Contract. If funds to enable the State to effect continued payment under this Contract are not appropriated or otherwise made available, the State shall have the right to terminate this Contract and all affected Statements of Work, in whole or in part, at the end of the last period for which funds have been appropriated or otherwise made available by giving written notice of termination to Contractor. The State shall give Contractor at least 30 days advance written notice of termination for non-appropriation or unavailability (or such time as is available if the State receives notice of the final decision less than 30 days before the funding cutoff).

(b) If funding for the Contract is reduced by law, or funds to pay Contractor for the agreed-to level of the Services or production of Deliverables to be provided by Contractor are not appropriated or otherwise made available, the State may, upon 30 days written notice to Contractor, reduce the level of the Services or the change the production of Deliverables in such manner and for such periods of time as the State may elect. The charges payable under this Contract will be equitably adjusted to reflect any equipment, services or commodities not provided by reason of such reduction.

(c) In the event the State terminates this Contract, eliminates certain Deliverables, or reduces the level of Services to be provided by Contractor pursuant to this Section, the State shall pay Contractor for all Work-in-Process performed through the effective date of the termination or reduction in level, as the case may be and as determined by the State, to the extent funds are available. For the avoidance of doubt, this Section will not preclude Contractor from reducing or stopping Services/Deliverables and/or raising against the State in a court of competent jurisdiction, any claim for a shortfall in payment for Services performed or Deliverables finally accepted before the effective date of termination.

**2.214 Criminal Conviction**

The State may terminate this Contract immediately and without further liability or penalty in the event Contractor, an officer of Contractor, or an owner of a 25% or greater share of Contractor is convicted of a criminal offense incident to the application for, or performance of, a State, public or private Contract or subcontract; convicted of a criminal offense, including any of the following: embezzlement, theft, forgery, bribery, falsification or destruction of records, receiving stolen property, attempting to influence a public employee to breach the ethical conduct standards for State of Michigan employees; convicted under State or federal antitrust statutes; or convicted of any other criminal offense which in the sole discretion of the State reflects upon Contractor's business integrity.

**2.215 Approvals Rescinded**

The State may terminate this Contract without further liability or penalty in the event any final administrative or judicial decision or adjudication disapproves a previously approved request for purchase of personal services pursuant to Constitution 1963, Article 11, § 5, and Civil Service Rule 7-1. Termination may be in whole or in part and may be immediate as of the date of the written notice to Contractor or may be effective as of the date stated in such written notice.

**2.216 Rights and Obligations Upon Termination**

(a) If this Contract is terminated by the State for any reason, Contractor shall (1) stop all work as specified in the notice of termination, (2) take any action that may be necessary, or that the State may direct, for preservation and protection of Deliverables or other property derived or resulting from this Contract that may be in Contractor's possession, (3) return all materials and property provided directly or indirectly to Contractor by any entity, agent or employee of the State, (4) in the event that the Contractor maintains title in Deliverables that is intended to be transferred to the State at the termination of the Contract, Contractor will transfer title in, and deliver to, the State, unless otherwise directed, all Deliverables intended to be transferred to the State at the termination of the Contract and which are resulting from the Contract (which shall be provided to the State on an "As-Is" basis except to the extent the amounts paid by the State in respect of such items included compensation to Contractor for the provision of warranty services in respect of such materials), and (5) take any action to mitigate and limit any potential damages, or requests for Contractor adjustment or termination settlement costs, to the maximum practical extent, including terminating or limiting as otherwise applicable those subcontracts and outstanding orders for material and supplies resulting from the terminated Contract.

(b) In the event the State terminates this Contract prior to its expiration for its own convenience, the State shall pay Contractor for all charges due for Services provided prior to the date of termination and, if applicable, as a separate item of payment pursuant to this Contract, for Work In Process, on a percentage of completion basis at the level of completion determined by the State. All completed or partially completed Deliverables prepared by Contractor pursuant to this Contract shall, at the option of the State, become the State's property, and Contractor shall be entitled to receive equitable fair compensation for such Deliverables. Regardless of the basis for the termination, the State shall not be obligated to pay, or otherwise compensate, Contractor for any lost expected future profits, costs or expenses incurred with respect to Services not actually performed for the State.

(c) Upon a good faith termination, the State shall have the right to assume, at its option, any and all subcontracts and agreements for services and deliverables provided under this Contract, and may further pursue completion of the Services/Deliverables under this Contract by replacement contract or otherwise as the State may in its sole judgment deem expedient.

**2.217 Reservation of Rights**

Any termination of this Contract or any Statement of Work issued under it by a party shall be with full reservation of, and without prejudice to, any rights or remedies otherwise available to such party with respect to any claims arising prior to or as a result of such termination.

**2.218 Contractor Transition Responsibilities**

In the event this contract is terminated, for convenience or cause, dissolved, voided, rescinded, nullified, expires or is otherwise rendered unenforceable, the Contractor agrees to comply with direction provided by the State to assist in the orderly transition of equipment, services, software, leases, etc. to the State or a third party designated by the State. In the event of termination or the expiration of this Contract, the Contractor agrees to make all reasonable efforts to effect an orderly transition of services within a reasonable period of time that in no event will exceed 30 days. These efforts shall include, but are not limited to, the following:

(a) Personnel - The Contractor shall work with the State, or a specified third party, to develop a transition plan setting forth the specific tasks and schedule to be accomplished by the parties, to effect an orderly transition. The Contractor shall allow as many personnel as practicable to remain on the job to help the State, or a specified third party, maintain the continuity and consistency of the services required by this Contract. In addition, during or following the transition period, in the event the State requires the Services of the Contractor's subcontractors or vendors, as necessary to meet its needs, Contractor agrees to reasonably, and with good-faith, work with the State to use the Services of Contractor's subcontractors or vendors. Contractor will notify all of Contractor's subcontractors of procedures to be followed during transition.

(b) Information - The Contractor agrees to provide reasonable detailed specifications for all Services/Deliverables needed by the State, or specified third party, to properly provide the Services/Deliverables required under this Contract. The Contractor will provide the State with asset management data generated from the inception of this Contract through the date on which this Contractor is terminated in a comma-delineated format unless otherwise requested by the State. The Contractor will deliver to the State any remaining owed reports and documentation still in Contractor's possession subject to appropriate payment by the State.

(d) Software. - The Contractor shall reasonably assist the State in the acquisition of any Contractor software required to perform the Services/use the Deliverables under this Contract. This shall include any documentation being used by the Contractor to perform the Services under this Contract. If the State transfers any software licenses to the Contractor, those licenses shall, upon expiration of the Contract, transfer back to the State at their current revision level. Upon notification by the State, Contractor may be required to freeze all non-critical changes to Deliverables/Services.

(e) Payment - If the transition results from a termination for any reason, reimbursement shall be governed by the termination provisions of this Contract. If the transition results from expiration, the Contractor will be reimbursed for all reasonable transition costs (i.e. costs incurred within the agreed period after contract expiration that result from transition operations) at the rates specified by **Article 1, Attachment C**. The Contractor will prepare an accurate accounting from which the State and Contractor may reconcile all outstanding accounts.

**2.219 State Transition Responsibilities**

In the event that this Contract is terminated, dissolved, voided, rescinded, nullified, or otherwise rendered unenforceable, the State agrees to perform the following obligations, and any others upon which the State and the Contractor agree:

(a) Reconciling all accounts between the State and the Contractor;

(b) Completing any pending post-project reviews.

**2.220 Termination by Contractor**

**2.221 Termination by Contractor**

If the State materially breaches its obligation to pay Contractor undisputed amounts due and owing under this Contract in accordance with **Section 2.090**, or if the State breaches its other obligations under this Contract to an extent that makes it impossible or commercially impractical for Contractor to perform the Services, and if the State does not cure the breach within the time period specified in a written notice of breach provided to the State by Contractor (such time period not to be less than 30 days), then Contractor may terminate this Contract, in whole or in part based on Statement of Work for cause, as of the date specified in the notice of termination; provided, however, that Contractor must discharge its obligations under **Section 2.250** before any such termination.

**2.230 Stop Work**

**2.231 Stop Work Orders**

The State may, at any time, by written stop work order to Contractor, require that Contractor stop all, or any part, of the work called for by the Contract for a period of up to ninety (90) calendar days after the stop work order is delivered to Contractor, and for any further period to which the parties may agree. The stop work order shall be specifically identified as such and shall indicate that it is issued under this **Section 2.230**. Upon receipt of the stop work order, Contractor shall immediately comply with its terms and take all reasonable steps to minimize the incurrence of costs allocable to the work covered by the stop work order during the period of work stoppage. Within the period of the stop work order, the State shall either: (a) cancel the stop work order; or (b) terminate the work covered by the stop work order as provided in **Section 2.210**.

**2.232 Cancellation or Expiration of Stop Work Order**

If a stop work order issued under this **Section 2.230** is canceled or the period of the stop work order or any extension thereof expires, Contractor shall resume work. The parties shall agree upon an equitable adjustment in the delivery schedule, the Contract price, or both, and the Contract shall be modified, in writing, accordingly, if: (a) the stop work order results in an increase in the time required for, or in Contractor's costs properly allocable to, the performance of any part of the Contract; and (b) Contractor asserts its right to an equitable adjustment within thirty (30) calendar days after the end of the period of work stoppage; provided that, if the State decides the facts justify the action, the State may receive and act upon a Contractor proposal submitted at any time before final payment under the Contract. Any adjustment will conform to the requirements of **Section 2.106.**

**2.233 Allowance of Contractor Costs**

If the stop work order is not canceled and the work covered by the stop work order is terminated for reasons other than material breach, such termination shall be deemed to be a termination for convenience under **Section 2.212**, and the State shall allow reasonable costs resulting from the stop work order in arriving at the termination settlement. For the avoidance of doubt, the State shall not be liable to Contractor for loss of profits because of a stop work order issued under this **Section 2.230**.

**2.240 Reserved**

**2.250 Dispute Resolution**

**2.251 In General**

Any claim, counterclaim, or dispute between the State and Contractor arising out of or relating to the Contract or any Statement of Work shall be resolved as follows. For all Contractor claims seeking an increase in the amounts payable to Contractor under the Contract, or the time for Contractor's performance, Contractor shall submit a letter executed by Contractor's Contract Administrator or his designee certifying that (a) the claim is made in good faith, (b) the amount claimed accurately reflects the adjustments in the amounts payable to Contractor or the time for Contractor's performance for which Contractor believes the State is liable and covers all costs of every type to which Contractor is entitled from the occurrence of the claimed event, and (c) the supporting data provided with such an affidavit are current and complete to Contractor's best knowledge and belief.

**2.252 Informal Dispute Resolution**

(a) All operational disputes between the parties shall be resolved under the Contract Management procedures developed pursuant to **Section 2.100**. If the parties are unable to resolve any disputes after compliance with such processes, the parties shall meet with the Director of Purchasing Operations, DMB, or designee, for the purpose of attempting to resolve such dispute without the need for formal legal proceedings, as follows:

(i) The representatives of Contractor and the State shall meet as often as the parties reasonably deem necessary in order to gather and furnish to each other all information with respect to the matter in issue which the parties believe to be appropriate and germane in connection with its resolution. The representatives shall discuss the problem and negotiate in good faith in an effort to resolve the dispute without the necessity of any formal proceeding.

(ii) During the course of negotiations, all reasonable requests made by one party to another for non-privileged information reasonably related to the Contract will be honored in order that each of the parties may be fully advised of the other's position.

(iii) The specific format for the discussions will be left to the discretion of the designated State and Contractor representatives, but may include the preparation of agreed upon statements of fact or written statements of position.

(iv) Following the completion of this process within 60 calendar days, the Director of Purchasing Operations, DMB, or designee, shall issue a written opinion regarding the issue(s) in dispute within 30 calendar days. The opinion regarding the dispute shall be considered the State's final action and the exhaustion of administrative remedies.

(b) This **Section 2.250** will not be construed to prevent either party from instituting, and a party is authorized to institute, formal proceedings earlier to avoid the expiration of any applicable limitations period, to preserve a superior position with respect to other creditors, or pursuant to **Section 2.253**.

(c) The State will not mediate disputes between the Contractor and any other entity, except state agencies, concerning responsibility for performance of work pursuant to the Contract.

**2.253 Injunctive Relief**

The only circumstance in which disputes between the State and Contractor will not be subject to the provisions of **Section 2.252** is where a party makes a good faith determination that a breach of the terms of the Contract by the other party is such that the damages to such party resulting from the breach will be so immediate, so large or severe and so incapable of adequate redress after the fact that a temporary restraining order or other immediate injunctive relief is the only adequate remedy.

**2.254 Continued Performance**

Each party agrees to continue performing its obligations under the Contract while a dispute is being resolved except to the extent the issue in dispute precludes performance (dispute over payment shall not be deemed to preclude performance) and without limiting either party's right to terminate the Contract as provided in **Section 2.210** and **2.220**, as the case may be.

### 2.260 Federal and State Contract Requirements

#### 2.261 Nondiscrimination

In the performance of the Contract, Contractor agrees not to discriminate against any employee or applicant for employment, with respect to his or her hire, tenure, terms, conditions or privileges of employment, or any matter directly or indirectly related to employment, because of race, color, religion, national origin, ancestry, age, sex, height, weight, marital status, physical or mental disability. Contractor further agrees that every subcontract entered into for the performance of this Contract or any purchase order resulting from this Contract will contain a provision requiring non-discrimination in employment, as specified here, binding upon each Subcontractor. This covenant is required pursuant to the Elliot Larsen Civil Rights Act, 1976 PA 453, MCL 37.2101, *et seq*., and the Persons with Disabilities Civil Rights Act, 1976 PA 220, MCL 37.1101, *et seq*., and any breach of this provision may be regarded as a material breach of the Contract.

#### 2.262 Unfair Labor Practices

Pursuant to 1980 PA 278, MCL 423.231, *et seq*., the State shall not award a Contract or subcontract to an employer whose name appears in the current register of employers failing to correct an unfair labor practice compiled pursuant to section 2 of the Act. This information is compiled by the United States National Labor Relations Board. A Contractor of the State, in relation to the Contract, shall not enter into a contract with a Subcontractor, manufacturer, or supplier whose name appears in this register. Pursuant to section 4 of 1980 PA 278, MCL 423.324, the State may void any Contract if, subsequent to award of the Contract, the name of Contractor as an employer or the name of the Subcontractor, manufacturer or supplier of Contractor appears in the register.

#### 2.263 Workplace Safety and Discriminatory Harassment

In performing Services for the State, the Contractor shall comply with the Department of Civil Services Rule 2-20 regarding Workplace Safety and Rule 1-8.3 regarding Discriminatory Harassment. In addition, the Contractor shall comply with Civil Service regulations and any applicable agency rules provided to the Contractor. For Civil Service Rules, see http://www.mi.gov/mdcs/0,1607,7-147-6877---,00.html.

### 2.270 Litigation

#### 2.271 Disclosure of Litigation

(a) Disclosure. Contractor must disclose any material criminal litigation, investigations or proceedings involving the Contractor (and each Subcontractor) or any of its officers or directors or any litigation, investigations or proceedings under the Sarbanes-Oxley Act. In addition, each Contractor (and each Subcontractor) must notify the State of any material civil litigation, arbitration or proceeding which arises during the term of the Contract and extensions thereto, to which Contractor (or, to the extent Contractor is aware, any Subcontractor hereunder) is a party, and which involves: (i) disputes that might reasonably be expected to adversely affect the viability or financial stability of Contractor or any Subcontractor hereunder; or (ii) a claim or written allegation of fraud against Contractor or, to the extent Contractor is aware, any Subcontractor hereunder by a governmental or public entity arising out of their business dealings with governmental or public entities. Any such litigation, investigation, arbitration or other proceeding (collectively, "Proceeding") must be disclosed in a written statement to the Contract Administrator within 30 days of its occurrence. Details of settlements which are prevented from disclosure by the terms of the settlement may be annotated as such. Information provided to the State from Contractor's publicly filed documents referencing its material litigation will be deemed to satisfy the requirements of this Section.

(b) Assurances. In the event that any such Proceeding disclosed to the State pursuant to this Section, or of which the State otherwise becomes aware, during the term of this Contract would cause a reasonable party to be concerned about:

(i) the ability of Contractor (or a Subcontractor hereunder) to continue to perform this Contract in accordance with its terms and conditions, or

(ii) whether Contractor (or a Subcontractor hereunder) in performing Services for the State is engaged in conduct which is similar in nature to conduct alleged in such Proceeding, which conduct would constitute a breach of this Contract or a violation of Michigan law, regulations or public policy, then Contractor shall be required to provide the State all reasonable assurances requested by the State to demonstrate that:
(A) Contractor and/or its Subcontractors hereunder will be able to continue to perform this Contract and any Statements of Work in accordance with its terms and conditions, and
(B) Contractor and/or its Subcontractors hereunder have not and will not engage in conduct in performing the Services which is similar in nature to the conduct alleged in such Proceeding.

(c) Contractor shall make the following notifications in writing:
(1) Within 30 days of Contractor becoming aware that a change in its ownership or officers has occurred, or is certain to occur, or a change that could result in changes in the valuation of its capitalized assets in the accounting records, Contractor shall notify the Office of Purchasing Operations.
(2) Contractor shall also notify the Office of Purchasing Operations within 30 days whenever changes to asset valuations or any other cost changes have occurred or are certain to occur as a result of a change in ownership or officers.
(3) Contractor shall also notify Purchasing Operations within 30 days whenever changes to company affiliations occur.

**2.272 Governing Law**

The Contract shall in all respects be governed by, and construed in accordance with, the substantive laws of the State of Michigan without regard to any Michigan choice of law rules that would apply the substantive law of any other jurisdiction to the extent not inconsistent with, or pre-empted by federal law.

**2.273 Compliance with Laws**

Contractor shall comply with all applicable state, federal, and local laws and ordinances ("Applicable Laws") in providing the Services/Deliverables.

**2.274 Jurisdiction**

Any dispute arising from the Contract shall be resolved in the State of Michigan. With respect to any claim between the parties, Contractor consents to venue in Ingham County, Michigan, and irrevocably waives any objections it may have to such jurisdiction on the grounds of lack of personal jurisdiction of such court or the laying of venue of such court or on the basis of forum non conveniens or otherwise. Contractor agrees to appoint agents in the State of Michigan to receive service of process.

**2.280 Environmental Provision**

**2.281 Environmental Provision**

For the purposes of this Section, "Hazardous Materials" is a generic term used to describe asbestos, ACBMs, PCBs, petroleum products, such construction materials as paint thinners, solvents, gasoline, oil, etc., and any other material the manufacture, use, treatment, storage, transportation or disposal of which is regulated by the federal, state or local laws governing the protection of the public health, natural resources or the environment. This includes, but is not limited to, materials such as batteries and circuit packs, and other materials that are regulated as (1) "Hazardous Materials" under the Hazardous Materials Transportation Act, (2) "chemical hazards" under the Occupational Safety and Health Administration standards, (3) "chemical substances or mixtures" under the Toxic Substances Control Act, (4) "pesticides" under the Federal Insecticide Fungicide and Rodenticide Act, and (5) "hazardous wastes" as defined or listed under the Resource Conservation and Recovery Act. This Contract does not cover the handling, removal, or disposal of all Hazardous Materials.

(a) The Contractor shall use, handle, store, dispose of, process, transport and transfer any material considered a Hazardous Material in accordance with all federal, State and local laws. The State shall provide a safe and suitable environment for performance of Contractor's Work. Prior to the commencement of Work, the State shall advise Contractor of the presence at the work site of any Hazardous Material to the extent that the State is aware of such Hazardous Material. If the Contractor encounters material reasonably believed to be a Hazardous Material and which may present a substantial danger, the Contractor shall immediately stop all affected Work, give written notice to the State of the conditions encountered, and take appropriate health and safety precautions.

(b) Upon receipt of a written notice, the State will investigate the conditions. If (a) the material is a Hazardous Material that may present a substantial danger, and (b) the Hazardous Material was not brought to the site by the Contractor, or does not result in whole or in part from any violation by the Contractor of any laws covering the use, handling, storage, disposal of, processing, transport and transfer of Hazardous Materials, the State shall order a suspension of Work in writing. The State shall proceed to have the Hazardous Material removed or rendered harmless. In the alternative, the State shall terminate the affected Work for the State's convenience.

(c) Once the Hazardous Material has been removed or rendered harmless by the State, the affected Work shall be resumed as directed in writing by the State. Any determination by the Michigan Department of Community Health and/or the Michigan Department of Environmental Quality (whichever is applicable) that the Hazardous Material has either been removed or rendered harmless shall be binding upon the State and Contractor for the purposes of resuming the Work. If any such incident with Hazardous Material results in delay not reasonable anticipatable under the circumstances and which is attributable to the State, the applicable SLAs for the affected Work will not be counted in **Section 2.076** for a time as mutually agreed by the parties.

(d) If the Hazardous Material was brought to the site by the Contractor, or results in whole or in part from any violation by the Contractor of any laws covering the use, handling, storage, disposal of, processing, transport and transfer of Hazardous Material, or from any other act or omission within the control of the Contractor, the Contractor shall bear its proportionate share of the delay and costs involved in cleaning up the site and removing and rendering harmless the Hazardous Material in accordance with Applicable Laws to the condition approved by applicable regulatory agency(ies). If the Contractor fails to take appropriate action pursuant to Applicable Laws and consistent with the State requirements, then the State may take appropriate action.

## 2.290 General

### 2.291 Amendments

The Contract may not be modified, amended, extended, or augmented, except by a writing executed by the parties.

### 2.292 Assignment

(a) Neither party shall have the right to assign the Contract, or to assign or delegate any of its duties or obligations under the Contract, to any other party (whether by operation of law or otherwise), without the prior written consent of the other party; provided, however, that the State may assign the Contract to any other State agency, department, division or department without the prior consent of Contractor and Contractor may assign the Contract to an affiliate so long as such affiliate is adequately capitalized and can provide adequate assurances that such affiliate can perform the Contract. Any purported assignment in violation of this Section shall be null and void. It is the policy of the State of Michigan to withhold consent from proposed assignments, subcontracts, or novations when such transfer of responsibility would operate to decrease the State's likelihood of receiving performance on the Contract or the State's ability to recover damages.

(b) Contractor may not, without the prior written approval of the State, assign its right to receive payments due under the Contract. In the event of any such permitted assignment, Contractor shall not be relieved of its responsibility to perform any duty imposed upon it herein, and the requirement under the Contract that all payments shall be made to one entity shall continue.

**2.293 Entire Contract; Order of Precedence**

(a) The Contract, including any Statements of Work and Exhibits, to the extent not contrary to the Contract, each of which is incorporated for all purposes, constitutes the entire agreement between the parties with respect to the subject matter and supersedes all prior agreements, whether written or oral, with respect to such subject matter and as additional terms and conditions on the purchase order shall apply as limited by **Section 2.061**.

(b) In the event of any inconsistency between the terms of the Contract and a Statement of Work, the terms of the Statement of Work will take precedence (as to that Statement of Work only); provided, however, that a Statement of Work may not modify or amend the terms of **Sections 2.110 through 2.220** of the Contract, which may be modified or amended only by a formal Contract amendment.

**2.294 Headings**

Captions and headings used in the Contract are for information and organization purposes. Captions and headings, including inaccurate references, do not, in any way, define or limit the requirements or terms and conditions of the Contract.

**2.295 Relationship of the Parties (Independent Contractor Relationship)**

The relationship between the State and Contractor is that of client and independent Contractor. No agent, employee, or servant of Contractor or any of its Subcontractors shall be or shall be deemed to be an employee, agent or servant of the State for any reason. Contractor will be solely and entirely responsible for its acts and the acts of its agents, employees, servants and Subcontractors during the performance of the Contract.

**2.296 Notices**

(a) Any notice given to a party under the Contract shall be deemed effective, if addressed to such party as addressed below, upon: (i) delivery, if hand delivered; (ii) receipt of a confirmed transmission by facsimile if a copy of the notice is sent by another means specified in this Section; (iii) the third (3rd) Business Day after being sent by U.S. mail, postage pre-paid, return receipt requested; or (iv) the next Business Day after being sent by a nationally recognized overnight express courier with a reliable tracking system.

State of Michigan
Department of Management and Budget
Office of Purchasing Operations
Attention: Erica Busick
PO Box 30026
530 West Allegan
Lansing, Michigan 48909

with a copy to:
State of Michigan
Department of Natural Resources
Attention: Jana Harding
530 West Allegan Street
PO Box 30028
Lansing, Michigan 48909

Contractor(s):
Quantum Construction
Attention: Edward Plockmeyer
2767 Blue Star Hwy
Douglas, MI 49406

Either party may change its address where notices are to be sent by giving notice in accordance with this Section.

(b) Binding Commitments
Representatives of Contractor identified in **Article 1, Attachment B** shall have the authority to make binding commitments on Contractor's behalf within the bounds set forth in such table. Contractor may change such representatives from time to time upon written notice.

**2.297 Media Releases and Contract Distribution**

(a) Media Releases
Neither Contractor nor the State will make any news releases, public announcements or public disclosures, nor will they have any conversations with representatives of the news media, pertaining to the Contract, the Services or the Contract without the prior written approval of the other party, and then only in accordance with explicit written instructions provided by that party. In addition, neither Contractor nor the State will use the name, trademarks or other proprietary identifying symbol of the other party or its affiliates without such party's prior written consent. Prior written consent of the Contractor must be obtained from authorized representatives.

(b) Contract Distribution
Purchasing Operations shall retain the sole right of Contract distribution to all State agencies and local units of government unless other arrangements are authorized by Purchasing Operations.\\

**2.298 Reformation and Severability**

Each provision of the Contract shall be deemed to be severable from all other provisions of the Contract and, if one or more of the provisions of the Contract shall be declared invalid, the remaining provisions of the Contract shall remain in full force and effect.

**2.299 Consents and Approvals**

Except as expressly provided otherwise in the Contract, if either party requires the consent or approval of the other party for the taking of any action under the Contract, such consent or approval shall be in writing and shall not be unreasonably withheld or delayed.

**2.300 No Waiver of Default**

The failure of a party to insist upon strict adherence to any term of the Contract shall not be considered a waiver or deprive the party of the right thereafter to insist upon strict adherence to that term, or any other term, of the Contract.

**2.301 Survival**

Any provisions of the Contract that impose continuing obligations on the parties including the parties' respective warranty, indemnity and confidentiality obligations, shall survive the expiration or termination of the Contract for any reason. Specific references to survival in the Contract are solely for identification purposes and not meant to limit or prevent the survival of any other section.

**2.302 Covenant of Good Faith**

Each party agrees that, in its dealings with the other party or in connection with the Contract, it shall act reasonably and in good faith. Unless stated otherwise in the Contract, the parties will not unreasonably delay, condition or withhold the giving of any consent, decision or approval that is either requested or reasonably required of them in order for the other party to perform its responsibilities under the Contract.

**2.303 Permits**

Contractor shall obtain and pay any associated costs for all required governmental permits, licenses and approvals for the delivery, installation and performance of the Services. The State shall pay for all costs and expenses incurred in obtaining and maintaining any necessary easements or right of way.

**2.304 Website Incorporation**

State expressly states that it will not be bound by any content on the Contractor's website, even if the Contractor's documentation specifically referenced that content and attempts to incorporate it into any other communication, unless the State has actual knowledge of such content and has expressly agreed to be bound by it in a writing that has been manually signed by an authorized representation of the State.

**2.305 Taxes**

Vendors are expected to collect and pay all applicable federal, state, and local employment taxes, including the taxes defined in Section 3.022 for all persons involved in the resulting Contract.

The State may refuse to award a contract to any Vendor who has failed to pay any applicable State taxes. The State may refuse to accept Vendor's bid, if Vendor has any outstanding debt with the State. Prior to any award, the State will verify whether Vendor has any outstanding debt with the State.

**2.306 Prevailing Wage - Reserved**

**2.307 Call Center Disclosure - Reserved**

**2.308 Future Bidding Preclusion**

Contractor acknowledges that, to the extent this Contract involves the creation, research, investigation or generation of a future RFP, it may be precluded from bidding on the subsequent RFP. The State reserves the right to disqualify any bidder if the State determines that the bidder has used its position (whether as an incumbent Contractor, or as a Contractor hired to assist with the RFP development, or as a Vendor offering free assistance) to gain a leading edge on the competitive RFP.

**2.310 Reserved**

**2.320 Extended Purchasing**

**2.321 MiDEAL – Reserved**

**2.322 State Employee Purchases – Reserved**

**2.330 Federal Grant Requirements**

**2.331 Federal Grant Requirements**

The following links contain certifications and terms which may be required for some purchases paid via Federal funds. They are included here to be utilized as required.

Lobbying Certifications are usually for agreements over $100,000. The debarment certification is required for all agreements. The last link is where you can go and search for debarred or suspended contractors.

http://straylight.law.cornell.edu/uscode/html/uscode31/usc_sec_31_00001352----000-.html
http://www.archives.gov/federal_register/codification/executive_order/12549.html
http://www.archives.gov/federal_register/executive_orders/pdf/12869.pdf
http://www.epls.gov/epls/servlet/EPLSSearchMain/1