Form No. DMB 234 (Rev. 1/96)
AUTHORITY: Act 431 of 1984
COMPLETION: Required
PENALTY: Contract will not be executed unless form is filed

STATE OF MICHIGAN
DEPARTMENT OF MANAGEMENT AND BUDGET
PURCHASING OPERATIONS
P.O. BOX 30026, LANSING, MI 48909
OR
530 W. ALLEGAN, LANSING, MI 48933

September 9, 2008

NOTICE
OF
CONTRACT NO. 071B8200220
between
THE STATE OF MICHIGAN
and

NAME & ADDRESS OF CONTRACTOR **Smart Office Systems** **2110 S. Washington Ave.** **Lansing, MI 48910** **Email:tzemer@smartofficesystems.com**	TELEPHONE **Tim Zemer** **(517) 492-7018** CONTRACTOR NUMBER/MAIL CODE BUYER/CA (517) 373-1455 **Laura Gyorkos, CPPB**
Contract Compliance Inspector: James Clark **Refurbished Open Space Office Furniture, Lateral Files, Design and Installation Services Statewide Contract**	
CONTRACT PERIOD: From: **August 6, 2008**	To: **August 5, 2011**
TERMS **1% 10 days, Net 30 days**	SHIPMENT **35, 21, 7, days and 72 hours ARO**
F.O.B. **Delivered**	SHIPPED FROM **Lansing, MI**
MINIMUM DELIVERY REQUIREMENTS **There are NO minimum order requirements.**	
MISCELLANEOUS INFORMATION:	

THIS CONTRACT IS EXTENDED TO LOCAL UNITS OF GOVERNMENT

The terms and conditions of this Contract are those of ITB #071I6200036, this Contract Agreement and the vendor's quote dated 1/4/06. In the event of any conflicts between the specifications, and terms and conditions, indicated by the State and those indicated by the vendor, those of the State take precedence.

Estimated Contract Value: $2,000,000.00

Form No. DMB 234 (Rev. 1/96)
AUTHORITY: Act 431 of 1984
COMPLETION: Required
PENALTY: Contract will not be executed unless form is filed

STATE OF MICHIGAN
DEPARTMENT OF MANAGEMENT AND BUDGET
PURCHASING OPERATIONS
P.O. BOX 30026, LANSING, MI 48909
OR
530 W. ALLEGAN, LANSING, MI 48933

CONTRACT NO. 071B8200220
between
THE STATE OF MICHIGAN
and

NAME & ADDRESS OF CONTRACTOR **Smart Office Systems** **2110 S. Washington Ave.** **Lansing, MI 48910** **Email:tzemer@smartofficesystems.com**	TELEPHONE **Tim Zemer** **(517) 492-7018** CONTRACTOR NUMBER/MAIL CODE BUYER/CA (517) 373-1455 **Laura Gyorkos, CPPB**

Contract Compliance Inspector: James Clark
Refurbished Open Space Office Furniture, Lateral Files, Design and Installation Services Statewide Contract

CONTRACT PERIOD: From: **August 6, 2008** To: **August 5, 2011**

TERMS **1% 10 days, Net 30 days**	SHIPMENT **35, 21, 7, days and 72 hours ARO**
F.O.B. **Delivered**	SHIPPED FROM **Lansing, MI**

MINIMUM DELIVERY REQUIREMENTS
There are NO minimum order requirements.

MISCELLANEOUS INFORMATION:
THIS CONTRACT IS EXTENDED TO LOCAL UNITS OF GOVERNMENT

The terms and conditions of this Contract are those of ITB #071I6200036, this Contract Agreement and the vendor's quote dated 1/4/06. In the event of any conflicts between the specifications, and terms and conditions, indicated by the State and those indicated by the vendor, those of the State take precedence.

Estimated Contract Value: $2,000,000.00

THIS IS NOT AN ORDER: This Contract Agreement is awarded on the basis of our inquiry bearing the ITB No. 071I6200036. Orders for delivery will be issued directly by State agencies.

All terms and conditions of the invitation to bid are made a part hereof.

FOR THE CONTRACTOR:	**FOR THE STATE:**
Smart Office Systems Firm Name	Signature **B. Craig Orr, Senior Deputy Director, DMB**
Authorized Agent Signature **Todd Thomann, Vice President**	Name/Title **Business Services Administration**
Authorized Agent (Print or Type)	Division
Date	Date

STATE OF MICHIGAN
Department of Management and Budget
Purchasing Operations

Contract No. 071B8200220
Refurbished Open Space Office Furniture, Lateral Files,
Design and Installation Services

SMART OFFICE SYSTEMS (SOS)

Buyer Name: Laura Gyorkos
Telephone Number: (517) 373-1455
E-Mail Address: gyorkosl@michigan.gov

Refurbished Open Space Office Furniture, Lateral Files, Design and Installation Services

TABLE OF CONTENTS

ARTICLE 1 – STATEMENT OF WORK (SOW) 7
1.0 Introduction 7
1.001 DEFINING DOCUMENT 7
1.002 PROJECT TITLE AND DESCRIPTION 7
1.003 PROJECT CONTROL 7
1.004 COMMENCEMENT OF WORK 7
1.1 Product Quality 7
1.101 SPECIFICATIONS 7
1.102 RESERVED 8
1.103 QUALITY ASSURANCE PROGRAM 8
1.104 WARRANTY 8
1.105 RECYCLING/ENVIRONMENTAL AWARENESS 9
1.106 RESERVED 10
1.107 STATE ESTABLISHED STANDARDS 10
1.2 Service Capabilities 11
1.201 CUSTOMER SERVICE/ORDERING 11
1.202 DEALERSHIP SUPPORT 12
1.203 DESIGN SERVICES 16
1.204 INSTALLATION SERVICES 21
1.205 PREMIUM SERVICES 23
1.206 RESERVED 24
1.207 REPORTING 24
1.208 SPECIAL PROGRAMS 25
1.209 PROJECT COORDINATION 29
1.211 REFURBISHED PRODUCT 30
1.212 RESERVED 30
1.213 RESERVED 30
1.214 E-COMMERCE CAPABILITIES 30
1.215 PRODUCT/COLOR /FABRIC INFORMATION 31
1.214 RESERVED 31
1.217 E-CATALOG/BROCHURES 31
1.218 ORDER/INVOICE/RECONCILIATION 32
1.219 SECURITY 32
1.220 DESIGN PROGRAMS 33
1.3 Delivery Capabilities 34
1.301 TIME FRAMES 34
1.302 MINIMUM ORDER 36
1.304 PACKAGING/ASSEMBLY/LABELING/PALLETIZING 36
1.305 DELIVERY/SHORT TERM STORAGE 38
1.4 Project Price 39
1.401 PROPOSAL PRICING--FURNITURE 39
d. TIME STUDIES 43
1.407 QUICK PAYMENT TERMS 44
1.408 PRICE TERM 44
ARTICLE 2 – GENERAL TERMS AND CONDITIONS 44
2.0 Introduction 45
2.001 GENERAL PURPOSE 45
2.002 ISSUING OFFICE AND CONTRACT ADMINISTRATOR 45
2.003 NOTICE 46
2.004 CONTRACT TERM 46
2.005 GOVERNING LAW 46
2.006 APPLICABLE STATUTES 46
2.007 RELATIONSHIP OF THE PARTIES 47

2.008 HEADINGS **47**
2.009 MERGER **47**
2.010 SEVERABILITY **47**
2.011 SURVIVORSHIP **47**
2.012 NO WAIVER OF DEFAULT **47**
2.013 PURCHASE ORDERS **48**
2.1 Vendor/Contractor Obligations 48
2.101 ACCOUNTING RECORDS **48**
2.102 NOTIFICATION OF OWNERSHIP **48**
2.103 SOFTWARE COMPLIANCE **48**
2.104 RESERVED **49**
2.105 RESERVED **49**
2.106 PREVAILING WAGE **49**
2.107 PAYROLL AND BASIC RECORDS **49**
2.108 COMPETITION IN SUBCONTRACTING **50**
2.109 CALL CENTER DISCLOSURE **50**
2.2 Contract Performance 50
2.201 TIME IS OF THE ESSENCE **50**
2.202 CONTRACT PAYMENT SCHEDULE **50**
2.203 RESERVED **50**
2.204 RESERVED **50**
2.205 ELECTRONIC PAYMENT AVAILABILITY **50**
2.206 RESERVED **50**
2.3 Contract Rights and Obligations 50
2.301 INCURRING COSTS **50**
2.302 CONTRACTOR RESPONSIBILITIES **51**
2.303 ASSIGNMENT AND DELEGATION **51**
2.304 TAXES **51**
2.305 INDEMNIFICATION **51**
2.306 LIMITATION OF LIABILITY **54**
2.307 CONTRACT DISTRIBUTION **54**
2.308 FORM, FUNCTION, AND UTILITY **54**
2.309 ASSIGNMENT OF ANTITRUST CAUSE OF ACTION **54**
2.310 PURCHASING FROM OTHER STATE AGENCIES **54**
2.311 TRANSITION ASSISTANCE **54**
2.312 RESERVED **54**
2.313 RESERVED **54**
2.314 WEBSITE INCORPORATION **55**
2.4 Contract Review and Evaluation 55
2.401 RESERVED **55**
2.402 PERFORMANCE REVIEWS **55**
2.403 AUDIT OF CONTRACT COMPLIANCE/ RECORDS AND INSPECTIONS **55**
2.5 Quality and Warranties 56
2.501 PROHIBITED PRODUCTS **56**
2.502 QUALITY ASSURANCE **56**
2.503 INSPECTION **56**
2.504 GENERAL WARRANTIES (GOODS) **57**
2.505 CONTRACTOR WARRANTIES **57**
2.506 STAFF **58**
2.507 RESERVED **58**
2.508 RESERVED **58**
2.509 RESERVED **59**
2.6 Breach of Contract 59
2.601 BREACH DEFINED **59**
2.602 NOTICE AND THE RIGHT TO CURE **59**
2.603 EXCUSABLE FAILURE **59**
2.7 Remedies 60
2.701 CANCELLATION **60**
2.702 RIGHTS UPON CANCELLATION **61**
2.703 RESERVED **61**

2.704 STOP WORK **61**
2.705 SUSPENSION OF WORK **62**
2.8 Changes, Modifications, and Amendments 62
2.801 APPROVALS **62**
2.802 TIME EXTENTIONS **62**
2.803 MODIFICATION **62**
2.804 AUDIT AND RECORDS UPON MODIFICATION **63**
2.805 CHANGES **63**
2.900 LIABILITY INSURANCE **64**
2.901 EXTENDED PURCHASING TO LOCAL UNITS OF GOVERNMENT/INSTITUTIONS OF HIGHER LEARNING **67**
2.902 LABOR RELATIONS **67**
2.903 WORKPLACE DISCRIMINATION **67**

Items marked **"RESERVED"** do not apply to this contract.

ATTACHMENTS:

Appendix A: Specifications

Refurbished Open Space Office Furniture Product Specifications (5 pages)
Refurbished Open Space Office Furniture Design Services Specifications (5 pages)
Refurbished Open Space Office Furniture Installation Specifications (6 pages)
Refurbished Lateral File Specifications (3 pages)

Appendix B: Refurbished Open Space Furniture Product Lines by Category

Appendix C: Pricing Sheets

Refurbished Open Space Office Furniture – Bid by Category
Refurbished Open Space Office Furniture – Dual Award Discount
Refurbished Open Space Office Furniture Item Listing for Workstation Cluster (2 pages)
Refurbished Open Space Office Furniture Design Services Information Sheet (2 pages)
Refurbished Open Space Office Furniture Installation Services Information Sheet (3 pages)
Time Studies
Design Calculation Sheet
Installation Calculation Sheet
Refurbished Lateral File Pricing Sheet
Refurbished Lateral File Cabinets Item Listing (2 pages)
Additional Information Sheet

Appendix D: State of Michigan – Agency Procurement Listing

Appendix E: State of Michigan Zone Map

Appendix F: Six (6) Workstation Cluster

Appendix G: Requirements of Michigan Public Act 166 of 1965, Prevailing Wages on State Projects

Appendix H: Overtime Provisions for Michigan Prevailing Wage Rate Schedule and Information on Fringe Benefits

Appendix I: Official Prevailing Wage Rates

– Carpenter
– Electrician
– Laborer

Appendix J: UL Listing

Appendix K: Warranty

Appendix L: Questions and Answers to Smart Office Systems

Appendix M: Fabric, Trim and Worksurface Standards for Smart Office Systems

ARTICLE 1 – STATEMENT OF WORK (SOW)

1.0 Introduction

1.001 DEFINING DOCUMENT

This is a contract. This is a formal agreement between the prime contractor and the State of Michigan. This document contains or incorporates defined requirements, the specifications and scope of work, and all contractual terms and conditions.

1.002 PROJECT TITLE AND DESCRIPTION

The purpose of this contract is for the purchase of Refurbished Open Space Furniture, Lateral Files and related services as defined within the contract. Article 1 is designed to provide the contractor with information on requirements associated with this agreement.

1.003 PROJECT CONTROL

Project Control

a. The Contractor will carry out this project under the direction and control of the Department of Management and Budget, Office of Facilities.

1.004 COMMENCEMENT OF WORK

Contractor shall show acceptance of this agreement by signing both copies of this Contract and returning it to the Contract administrator. Contractor shall not proceed with performance of the work to be done under this "Contract Agreement" until they receive a formal executed Purchase Order, including the purchase of necessary materials.

1.1 Product Quality

1.101 SPECIFICATIONS

Definite Specifications - All commodities and/or services to be furnished hereunder shall conform to the attached specifications.

The following specifications are attached:

Refurbished Open Space Office Furniture Specifications
Refurbished Lateral File Specifications
Design Service Specifications
Installation Service Specifications

Products offered **MUST** meet these specifications and any industry standards referenced in the specifications. If portions of the referenced standards conflict with the State of Michigan specifications, the State of Michigan specifications prevail and take precedence.

The State prefers that the contractor offer an entire family or product line of Refurbished Open Space Furniture/Lateral Files as opposed to single items. The contractor shall not mix product lines and manufacturers other than what is specified in the resulting Refurbished Open Space Furniture Contract(s). The State reserves the right to select specific product lines offered by the bidder.

Please note that all products specified on this contract should be a standard product (running line) currently offered by the contractor, not a special product manufactured just for the State of Michigan.

The contractor may be required to submit laboratory test reports (certified in-house or independent laboratories) verifying that the products offered meet all industry standards referenced in the attached specification. The State of Michigan reserves the right to require that the actual test reports during the contract period.

1.102 RESERVED

1.103 QUALITY ASSURANCE PROGRAM

Components of Quality Assurance Systems

- Standardized traveler detailing exact components required for each order
- Operator accountability for accuracy and quality of products prior to moving to next operation
- Photographs of each item to verify presence and condition of product
- Blind count of order upon completion to insure all components are produced and shipped
- Installation feedback to address issue in the field

SOS products are UL listed, please find listing in Appendix J.

1.104 WARRANTY

All Refurbished Open Space Office Furniture to be considered for use by the State of Michigan shall include the following minimum warranty requirements. Warranty levels are indicated on the attached Appendix C - Additional Information Sheet. All warranties MUST also include labor costs. Warranty work can be performed either on-site or at an off-site location (the manufacturer or authorized distributor's facility), whichever is most economical and would provide for the fastest response (turn-around time). Warranty work shall be performed by a manufacturer certified crew.

All Products, including Parts and Workmanship **–** minimum of 10 years.
Operational Mechanisms and Electrical Components **–** minimum of 5 years.
Fabric and Laminate **--** minimum of 3 years.

Please refer to Smart Office System's Warranty located in Appendix L.

SOS Smart Office Systems is proud deliver products which are supported by the most extensive warranty program in the office furniture industry. The warranty plan from SOS virtually eliminates the hassles typically associated with warranty repairs.

The Contractor has provided the following:

1. An outline of how warranty work will be handled and any other service work that needs to be performed on product.

Warranty service and general issues can be communicated to SOS via the web-site, email or telephone. Once the warranty service or general service need is defined a response time will be communicated to the end user.

2. The maximum response time after notification by a user, maximum turn-around time to repair a defective product, what will be done if a defective product cannot be repaired, whether an attempt will be made to first repair a product on-site, how repairs will be handled if they cannot be done on-site, etc.

The maximum time after notification before a warranty service or general service will be complete will be 21 days. Typically SOS will attempt to repair the defective part first. If it is determined that repairing the defective part on site will be a distraction to the office workers in the area or is not in the best interest of the State of Michigan, SOS will replace the defective part with a replacement part and remove the defective part.

When repairs can not be handled on site a replacement part will be provided.

Most warranty service and general service for defective parts can be serviced within 5 days. It is unusual that a defective part would take 21 days.

3. A list of all participating dealers, distributors, etc. that will be performing warranty work and any other service work on product throughout the Contract period. Requirements to protect the warranty including actions that would void a manufacturer's warranty.

Warranty work will be completed by SOS and its affiliated dealers. The SOS warranty anticipates normal office use and does not extend to behavior or activities which would not normally exist within an office. The effects of such unusual behavior will void the warranty and typically make the purveyor of this behavior less productive and popular.

4. The contractor certifies the manufacturer supports the warranty for products offered. The contractor shall offer an extended manufacturer warranty or their own warranty program.

Located in Appendix K is the SOS limited life time warranty. This warranty is the most comprehensive warranty and includes all labor / materials necessary to correct the warranty issue.

The SOS Limited Life time warranty below which meets or exceeds the requirements set forth by the State of Michigan.

1.105 RECYCLING/ENVIRONMENTAL AWARENESS

Please note that contractors are encouraged to offer products containing recovered materials suitable for the intended use. By doing so, the contractor warrants the product(s) as at least functionally equivalent to the contract specifications. "Recovered material" is defined as post-consumer waste (any product generated by a business or consumer which have served their intended end use, and which have been separated or diverted from solid waste for the purpose of collection, recycling, and disposition), and secondary waste (industrial by-products as in wastes generated after completion of a manufacturing process that would normally not be reused).

In response to Executive Directive 2005-4 regarding Energy Efficiency in State Facilities, contractors are encouraged to lead organization efforts as it relates to LEED Certification. Contractors are to demonstrate how their products will help the State meet LEED point levels on capital outlay projects.

By our very nature, Smart Office Systems business is recycling and environmental awareness. Because fewer raw materials are used, remanufacturing conserves energy and natural resources. Office furniture recycling extends the lives of resources already in circulation such as wood, aluminum, steel, plastics and fiber, using them over and over to the fullest extent possible. Industry experts estimate that for each pound of natural resources used in remanufacturing, five to nine pounds of original materials are conserved.

By recycling office furniture, the products as well as the natural resources are diverted from the solid waste stream. All by-products of the remanufacturing process at SOS are sent to be recycled or reused in packaging. Steel, aluminum, cardboard, wood products, plastic and fabric are all recycled through various processors. Much of the old fabric is reused as packaging to reduce the need for cardboard and plastic packaging. After installation, recycled fabric, cardboard and plastic wrapping are all collected from the job site and returned for reuse or recycling.

Recycling office furniture conserves labor and manufacturing energy. The amount of labor and energy required to alter an existing product during remanufacturing is 85 to 95 percent less than that required to manufacture a new product. And, since much of the product has already been manufactured, remanufacturing saves the enormous amounts of energy required for production, especially when metals are kept out of the resmelting process.

For those products that have not be previously manufactured and must be added through the remanufacturing process, SOS is driven to utilize 100% recycled material. A good example is the 100% use of Terratex fabrics. Fabric is a large portion of the "new" material needed for remanufacturing and also

is a large part of the waste stream during the remanufacturing process. SOS utilizes only Terratex fabrics because they are made from 100% recycled or bio-based materials that can in turn be recycled or composted at the end of their useful life. Materials such as laminate, which can not be easily recycled, carry a GREENGUARD Certification.

SOS is committed to the goal of providing a remanufactured product with 100% recycled content to our customers. We are very close. The remanufactured Haworth product that is being supplied under this contract has a recycled content of up to 99.2%, depending on the non recycled content of items being purchased. SOS is also please to provide the option of utilizing a truly 100% recycled product; Haworth As-Is.

SOS will provide assistance with compliance to Executive Directive 2005-4, specifically Sections 5a and 5b of the order that focuses on LEED certification. Since there is no such thing as LEED certified product, no one product can provide LEED points. Products such as SOS's can however assist in receiving LEED points for their use under LEED for New Construction and Major Renovations (LEED-NC) and LEED for Commercial Interiors (LEED-CI). Remanufactured and As –Is Haworth Unigroup may help contribute to a number of point areas within LEED, including but not limited to:

Energy and Atmosphere, Optimize Energy Performance
Materials and Resources, Daylight and Views
Resource Reuse, 30% Furniture and Furnishings
Recycled Content, 10% (post-consumer + 1/2 pre-consumer)
Recycled Content, 20% (post-consumer + 1/2 pre-consumer)
Regional Materials, 20% Manufactured Regionally
Regional Materials, 10% Extracted and Manufactured Regionally
Rapidly Renewable Materials
Low-Emitting Materials, Systems Furniture and Seating

Remanufactured and As –Is Haworth Unigroup from SOS is a highly sustainable product. Virtually all the components of can be remanufactured or recycled. Unigroup panels can be recovered many, many times before having to be recycled. Many of the components simply need a new coat of paint. Because of the environmentally sustainable nature of this product, the following are some of the directories that list SOS as a supplier:

Michigan Manufactured Recycled Products Directory
EPA's Comprehensive Procurement Guide for Green Products
California Recycled Products Directory

SOS is also in the process of receiving certifications from the following organizations:

Scientific Certification Systems (SCS)
Greenguard Environmental Institute
Environmental Choice Program (Canada)

1.106 RESERVED

1.107 STATE ESTABLISHED STANDARDS

In an effort to manage the State's modular furniture more efficiently, the Department of Management and Budget, Design and Construction has established standard product lines, fabrics, trims and finishes for use by State agencies when requesting the purchase of new furniture.

Please refer to **Appendix K located in Contract #071B8200189** – New Open Space Furniture and related services for specific fabrics and finishes.

1.2 Service Capabilities

1.201 CUSTOMER SERVICE/ORDERING

The contractor shall have the capacity to receive orders electronically, by phone, facsimile, and by written order. The Contractor shall provide a statewide toll-free phone number for phone orders. Contractor shall have internal controls, approved by Purchasing Operations, to insure that authorized individuals with the State place orders.

The Contractor shall verify orders and contact the agency, if necessary, for orders that have quantities that appear to be abnormal or excessive. The parts ordered should accurately reflect the number of workstations ordered. If an order is incorrect, the Contractor is responsible for making appropriate adjustments covering all costs for any parts, excessive or lacking.

The Contractor shall have an accessible customer service department with an individual specifically assigned to State of Michigan accounts. The Contractor shall have an experienced representative make timely, personal visits to State accounts. The Contractor's customer service must respond to State agency inquiries within one business day.

The Contractor shall provide a statewide toll-free number for customer service calls.

FURNITURE ACQUISITION PROCESS

1. The State agency should contact their facility manager for any changes or additions to furniture needs.

2. The State agency should follow DMB, Facilities' process for Space Requests that involve a furniture request.

3. The State agency should follow Purchasing Operations' process by submitting a Purchase Request Form including all the relevant information such as drawings and SIF Files.

4. A technical review is conducted by DMB and the request is either approved or rejected. Additional information may be requested from the agency in order to complete the technical review.

5. If the request is approved, funds are allocated on the contract in MAIN for that agency only. The agency is then directed to issue their purchase order.

6. Purchase orders shall be issued to according to the following methods:

Ordering

Ordering methods

- Orders can be placed through the web site.
- Electronic orders can be E-mailed to Smart Office Systems via a dedicated E-mail address set up exclusively for the State of Michigan's use.
- Orders can be placed via fax at 517-492-7028
- Written orders can to mailed to

Smart Office Systems
Attn. State of Michigan Customer Service
2110 S. Washington Ave.
Lansing, MI 48910

Order Confirmation

- Orders that are received by 3pm will have an order confirmation sent via e-mail to the ordering agency's representative the following business day.
- Orders are also available at anytime via the web.

Order Verification
- Order Acknowledgements will be emailed and posted on the web site.
- Orders received by SOS State of Michigan customer service that have a corresponding proposal will be checked against that proposal to verify accuracy.
- Orders received by SOS State of Michigan customer service that do not have a corresponding proposal will be reviewed by the project manager assigned to the State of Michigan. This process will allow SOS to verify that the quantities being ordered accurately reflect the scope of the project.
- Any discrepancies or concerns will be immediately addressed with the appropriate State of Michigan representative.

Ordering Authorization
- Orders will only be accepted from authorized State of Michigan representatives. SOS State of Michigan customer service will refer to Appendix D, purchasing contacts for the State of Michigan; Dated 10-14-05, for a complete listing of State of Michigan authorized purchasers.
- SOS will request an up-dated list of authorized purchasers on a quarterly basis.
- Additions to the list of authorized purchasers will only be accepted once SOS State of Michigan customer service has received written communication from the State of Michigan's Acquisition Services representative authorizing this addition.
- Approval procedures can be implemented through the web site.

Customer Service

Staffing
- SOS will provided a customer service representative assigned exclusively to the State of Michigan.
- SOS will provide an experienced project manager assigned to the State of Michigan account.
- All customer service representatives have a pre-determined primary and secondary back up to insure prompt attentions to its customer's calls and request.

Communications
- The State of Michigan can access SOS customer service by calling SOS toll free at 866.DIALSOS and requesting a State of Michigan customer service representative.
- The State of Michigan can access SOS customer service by E-mailing Smart Office Systems customer service via a dedicated E-mail address set up exclusively for the State of Michigan's use.
- SOS will provide an initial visit schedule for the various departments and agencies of the State of Michigan. SOS's project manager will work directly with the State of Michigan's representative to determine the future visiting schedule for each department or agency depending on their individual need.

Customer Feed Back
- SOS sends an electronic "How did we do" survey to every customer upon completion of their project.
- SOS Management conducts frequent personal follow up calls to its customers to obtain addition feed back and suggestion on how to improve customer satisfaction.

1.202 DEALERSHIP SUPPORT

The State has various size projects occurring simultaneously on a daily basis. The State has hundreds of potential locations throughout both the Upper and Lower Peninsulas that may need to purchase products and services from this Contract. The State requires a single point of contact for dealership network support. The State expects the Contractor to identify one single point of contact that represents their primary dealer network. The primary dealer's responsibilities include coordination and completion of design and installation projects. The primary dealer is responsible for determining delegation of work by utilizing their dealership network in order to complete the project by the specified timelines.

If the primary dealer is unable to complete the project within the timelines specified by the agency project manager, the State expects the primary dealer to utilize their dealer network in order to complete the project within specified deadlines. The primary dealer must provide backup for all services.

SOS Smart Office Systems is prepared to provide a consistent, high level of service through the utilization of the SOS network of internal branch offices and external affiliates. This network shall service the UP and the Lower Peninsula of Michigan with the same high level of service.

SOS Smart Office Systems will encourage the use of a web-site, unique to the State of Michigan (SOM), for the initial contact for requests of services and products. The Web-site offers many features which will allow each department to communicate, track projects, communicate concerns, schedule projects, review AS-IS inventories online and many other features. DMB will be able to track the activities of all the Departments of the State through their enhanced access to this site.

SOS will also provide a toll free number, unique to the SOM for those individuals who are more comfortable verbally communicating their needs. SOS shall provide a team of SOS employees solely dedicated to the timely response to all requests. All requests, questions or inquiries shall be responded to within 2 hours of the initial call.

SOS Smart Office Systems has an internal network of offices in place to assist in serving the State of Michigan offices within each of their given geographic service areas. SOS proposes a single point of contact be the Headquarters in Lansing. Once the project has been defined, SOS will delegate work to each local servicing entity as required.

SOS Single Point of Contact:

Smart Office Systems – HQ / Plant
2110 S. Washington Ave.
Lansing, MI 48910

Contact: Tim Zemer
Phone: Statewide: 866-342-5767
Lansing Area: 517-492-7000
Fax: 517-492-7028
Email: tzemer@smartofficesystems.com

Below are a list of participating offices, the geographical area which they will serve and a visual map representing this geographic area.

Area 1 - Upper Peninsula of Michigan
Office Planning Group
103 E. High Street
Iron Mountain, MI 49801

Contact: Kirk Fortner
Phone: 906-774-5880
Fax: 906-774-2415
Email: lisa@opgup.com

Area 2 - Northern Michigan
Smart Office Systems – Branch Office
6099 County Cove
Traverse City, MI 49684

Contact: Chris Ubl
Phone: 231-883-1857
Fax: 231-883-1857
Email: cubl@smartofficesystems.com

Area 3 – West Michigan
Next Phase
380 Grand River
Ada, Mi 49301

Contact: Jeff Skym
Phone: 616-942-8920
Fax: 616-942-8921
Email: js@nextphaseinc.usa.net

Area 4 – Central Michigan
Smart Office Systems – HQ / Plant
2110 S. Washington Ave.
Lansing, MI48910

Contact: Tim Zemer – Primary Point of contact for all offices
Phone: 1-866-342-5767
Fax: 517-492-7028
Email: tzemer@smartofficesystems.com

Area 5 – Tri-Cities / Thumb
Smart Office Systems – Branch Office
1187 W. Bristol Rd.
Flint, MI 48507

Contact: Paul Zemer
Phone: 810-877-7105
Fax: 810-239-8357
Email: pzemer@smartofficesystems.com

Area 6 – Greater Detroit
Smart Office Systems – Branch office
34119 W. 12 Mile Road
Farmington Hills, MI 48831

Contact: Nate Anderson
Phone: 248-324-1963
Fax: 248-324-1992
Email: nanderson@smartofficesystems.com

Area 7 – Livingston County
Smart Office Systems – Branch Office
780 W. Grand River,
Brighton, MI 48116

Contact: Phil Mondro
Phone: 810-494-7178
Fax: 810-222-0563
Email: philm@smartofficesystems.com

Area 8 – South / East Michigan
Smart Office Systems – Branch Office
1220 Jewett Ave.,
Ann Arbor, MI 48104

Contact: Scott Caouette
Phone: 734-998-0833
Fax: 734-998-0835
Email: scottc@smartofficesystems.com

Zone mapping is as follows:

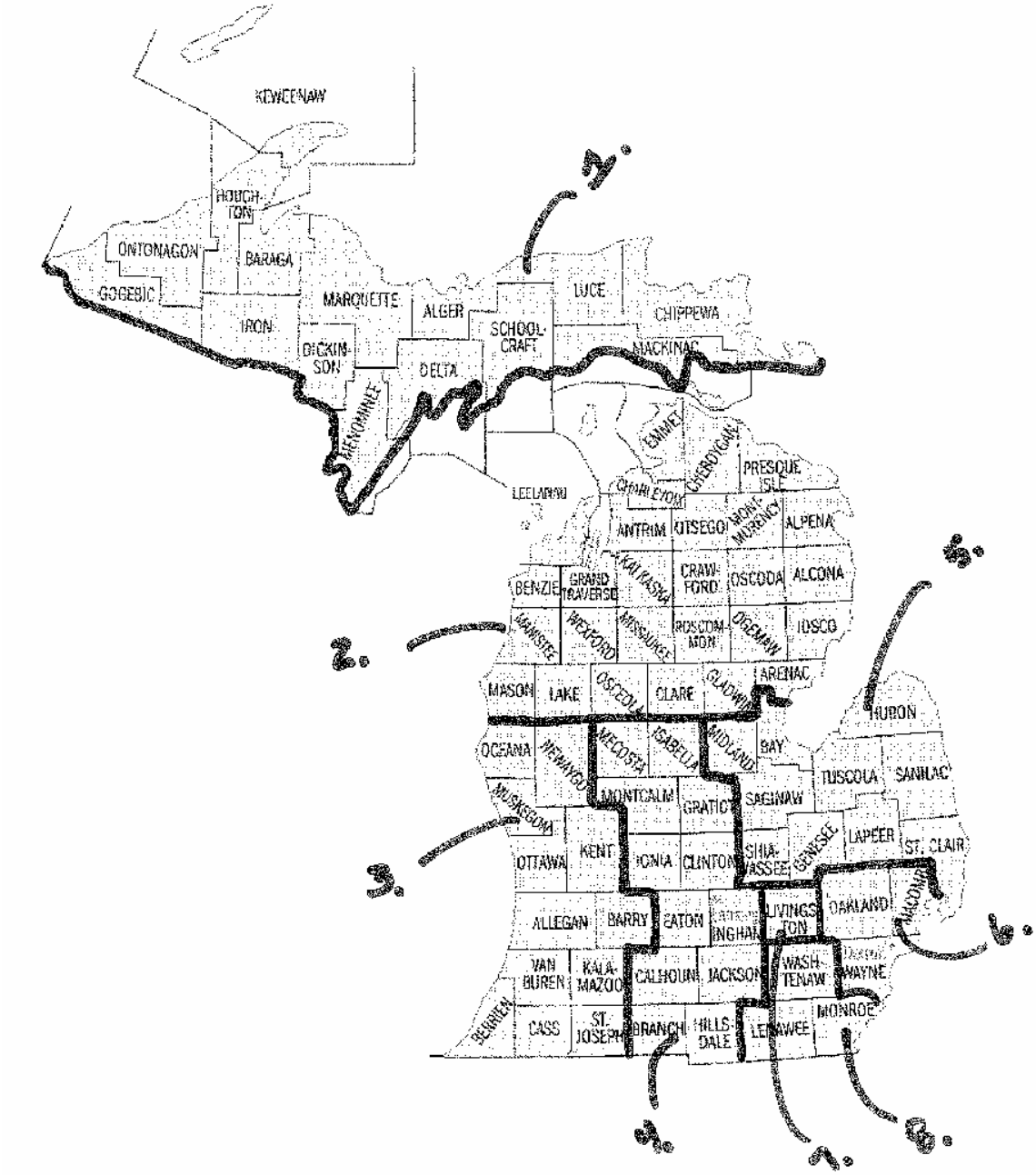

SOS has designated the initial point of contact on all projects to be our VP of Sales – State of Michigan Project, Tim Zemer and his staff located in the Lansing offices of SOS through the web or toll free number.

Once the parameters of the project have been defined a team of SOS employees will be assigned to handle each aspect of the project under the direction of Tim Zemer. Tim will coordinate the efforts of the SOS team to insure they dovetail with the desires of the Architectural and Engineering Staff as well as the end user.

The assigned team will remain active and responsive to the Architectural and Engineering department as well as the end user until the project is deemed complete by the SOM.

SOS has developed a comprehensive plan to provide continual back-up for each office within the SOS network to insure all projects are completed on time and with the same outstanding service SOS is known for. As virtually every department within the State of Michigan will indicate from their past dealings with SOS – no one provides better, more timely service than SOS.

Tim Zemer will track the work activity of each office on a daily basis, insuring that the work loads never exceed the capabilities of the office in question. Should an office become overloaded, SOS will relocate the work to another office or if necessary relocate an employee or employees from a less busy office. Tim will encourage the DMB to also track work activity through the Web-site to allow candid conversation regarding expectations, time frames and solutions to concerns.

1.203 DESIGN SERVICES

SOS maintains an in house Design staff that will be performing design services throughout the Contract. Staffing qualifications are as follows:

SMART OFFICE SYSTEMS DESIGN DEPARTMENT

Geoff Rozich - Design Manager

13 Years Office Furniture Industry Experience, AutoCAD R14, 2000, 2002, 2004, Giza, Cap Studio 2.7, Extensive knowledge of Haworth Systems Furniture, Herman Miller Systems Furniture, Specification and Management of projects up to 2 million dollars, Designing and managing an average of 30-40 plus Projects regularly, Reconfigurations of various existing furniture lines. Manages employees in the development of AutoCAD drawings, CAP Studio specifications and proposals for systems and case good furniture lines, Responsible for Making SOS Customers Happy

Karen Myszak – Designer

7 Years Office Furniture Industry Experience, AutoCAD R14, 2000, 2002, 2004, Giza, Cap Studio 2.7, Developed SOS Case good Line, Lead Designer for Saturn Projects, Responsible for Project Management and Installation Coordination, Extensive knowledge of Haworth Systems Furniture, Herman Miller Systems Furniture and SOS Case goods, Able to assist with complete interior finish selections, Able to coordinate installation and deliveries with contractors, vendors, and client as needed, Responsible for Making SOS Customers Happy

Matt Starkweather – Designer

6 Years Office Furniture Industry Experience, AutoCAD R14, 2000, 2002, 2004, Giza, Cap Studio 2.7, Has extensive knowledge of Haworth Systems Furniture, Herman Miller Systems Furniture and various other manufacturers, Specification of projects up to 2 million dollars, Coordinates development of proprietary SOS blocks and specifying program, Able to assist with complete interior finish selections, Able to coordinate installation and deliveries with contractors, vendors, and client as needed, Responsible for Design, Project Management, Responsible for Making SOS Customers Happy

Leah Sleeper – Interior Designer

7 Years Office Furniture Industry Experience, AutoCAD R14, 2000, 2004, 2005, Giza, Cap Studio 2.7, Has extensive knowledge of Haworth Systems Furniture and various other manufacturers. Associates Degree in Interior Design from Lansing Community College. Able to assist with complete interior finish selections, artwork, accessories, presentation boards as well as cad designs, Able to coordinate installation and deliveries with contractors, vendors, and client as needed. Has designed and managed projects for many Government and State offices in projects ranging in value up to $8 million dollars, Responsible for Making SOS Customers Happy

Kathleen Covert – Interior Designer

9 Years Office Furniture Experience, AutoCAD R2000, 2004, 2005, Giza, Cap Studio 2.7, Has extensive knowledge of Haworth Systems Furniture, Herman Miller Systems Furniture and various other manufacturers. Associates Degree in Interior Design from Baker College, Able to assist with complete interior finish selections, artwork, accessories, presentation boards as well as cad designs, Able to coordinate installation and deliveries with contractors, vendors, and client as needed, Developed and leads Internet Sales Program for SOS. Responsible for Design, Project Management and Installation Coordination Nationwide, and Responsible for Making SOS Customers Happy

Erica Meisner – Interior Designer

3 Years Office Furniture Industry Experience. Eastern Michigan University - Bachelor of Science in Interior Design, AutoCAD R14, 2000, 2004, Giza, Cap Studio 2.7, Extensive knowledge of Haworth Systems Furniture, Herman Miller Systems Furniture, Able to assist with complete interior finish selections, artwork, accessories, presentation boards as well as cad designs, Able to coordinate installation and deliveries with contractors, vendors, and client as needed, Creates AutoCAD drawings, CAP Studio specifications and proposals for systems and case good furniture lines and Responsible for Making SOS Customers Happy

Chris Ubl-Designer

3 Years Office Furniture Experience, Has extensive knowledge of Haworth Systems Furniture, Herman Miller Systems Furniture and various other manufacturers, Able to assist with complete interior finish selections, artwork, accessories, presentation boards as well as cad designs, Able to coordinate installation and deliveries with contractors, vendors, and client as needed, Responsible for Design, Project Management and Installation Coordination, Responsible for Making SOS Customers Happy

Building Measurements

Field measurements will be verified as part of the design process.

Project Management

A web based approval process will be implemented to facilitate the approval by the agency project manager.

DESIGN SERVICES

All projects will be reviewed on individual basis and services will include programming, schematic design, design development, specification generation, project management, installation management and follow up after installation. Details of services to include:

PROGRAMMING

- Consult with Client to ascertain the applicable requirements of the project and to review the overall needs and goals to be accomplished.
- Consult with (Architect, Contractor, Building manager) as needed to determine the building scope as it relates to the design.
- Interview management and various levels of staff to determine their needs and requirements, and to discuss priorities of relationships between people and departments.
- Consult with Client to determine preference for product, style, and image desired for project.
- Consult with Client concerning budget requirements and priorities.

- Review special requirements with Client.
- Computer communications, electrical.
- Filing, storage, and common work areas.
- Public areas
- Conference areas.
- Lighting and acoustical.
- Project scheduling requirements.
- Measure and inventory existing (equipment, furniture) to be reused in the new design.
- Photograph existing space for reference.
- Measure area.
- Confirm building measurements to architectural print.
- Check existing placement of electrical and telephone and lighting.
- Input floor plan to AutoCAD for efficient design of the space.
- Prepare data summarizing research gathered and present recommendations to client for approval.

SCHEMATIC DESIGN

- Based on Client approval of Programming recommendations, begin conceptual design.
- Prepare preliminary bubble diagram to show interaction and relationships between people and/or departments.
- Determine square footage requirements for each workstation and area, begin planning "typical".
- Present for client approval.
- Prepare space allocation and utilization plans (block plans) indicating the organization of offices, conference rooms, work areas, storage, public areas, and circulation space.
- Prepare ideas to establish the design concept for the project, indicating the types and quality of materials, finishes, furnishings and accessories.
- Prepare a preliminary budget estimate for the project, including furnishings and building finishes.
- Consult with architect and/or building manager to determine options for electrical and cabling distribution.
- Review Client's existing furniture inventory and determine suitability for use and appropriate location.
- Present for Client approval.

DESIGN DEVELOPMENT

- Based on Client's approval of schematic design, begin final design package.
- Prepare detailed layouts of space indicating placement of walls, furniture, and equipment.
- Prepare electrical, computer, and telephone placement plan.
- Review architectural drawings and specifications for lighting, telephone, electrical, and communication placements as they relate to the furniture placement.
- Provide copies of plans to Architect for finalizing structural, mechanical, electrical, and communications plans.
- Select colors, materials, and finishes for the interior space and provide coordination with the selection of furniture, finishes, and materials.
- Prepare sample boards.
- Communicate with (architect, contractor) on a regular basis to maintain maximum efficiency and to prevent overlap of responsibilities.
- Present for Client approval.

SPECIFICATIONS AND CONTRACT ADMINISTRATION

- Prepare AutoCAD drawings and Specifications required for the purchase and installation of the furnishings and interior finishes.
- Prepare a complete finish schedule indicating the placement of all surface materials including any special instructions as needed.
- Provide finish schedule to Contractor for incorporation into construction documents.
- Act as a representative for the client to advise and consult with contractors during interior construction.
- Assist with and review the final placement of all items and inspect for damage, quality, assembly, and function.
- Consult with Client and execute revisions as needed.

FOLLOW UP

- Conduct “Punch-list” walk through with client.
- Work with client to do any additional “Tune-up” designs.

There will be no cost to the State for electronic options such as the E-Catalog, access to drawings, specifications, proposals, design aids such as typicals, color selections, and all types project reporting. SOS currently utilizes an electronic format for distribution of designs and proposals throughout the company.

STANDARD DESIGN PROGRAM SERVICES:

The standard design program is applied to new building construction and renovation projects with standard lead times. The size and scope of the project, along with construction timeline will determine deadlines for presenting each step of the way to the agency. See above for list of services provided.

EXPRESS DESIGN PROGRAM SERVICES:

The express design program is applied to new building construction and renovation projects that require a short lead time. Services required under the Express Design Program will be based on the required time line. In most cases, Agency Programming, Pre-Design Review Meeting, Schematic Design Block Plan and Preliminary Design Plan will be expedited into one process. The design that comes from that process will be turned around and presented to agency within 2 business days. Revisions to that design will have a turn around time of 24 hours or less. See above for list of services provided.

RAPID RESPONSE DESIGN PROGRAM SERVICES:

The rapid response design program is applied to new building construction and renovation projects that require the shortest of lead times. All services will be streamlined into only what is absolutely required within the time frame given.

Design: 3 days
There is a limit of 50 workstations which can be designed within this time frame. The time frame begins with an approved design request and ends with a complete design returned to the client, ready for the installation of office furniture.

Average number of hours are based on the 6 station typical in Appendix F and are listed below:

Design Tasks	Number of Communication Hours Required
	Section N. Communication with Agency Based on 6 Workstation Typical
Agency Programming	1.1
Pre-Design Review Meeting	1.9
Schematics Design Block Plan,	1.0
Preliminary Design Block Plan	2.0
Installation Design Plan	1.2
Itemized Parts List	0.7
Project Cost	1.0
Punch List	1.7
“Tune-Up" Design	1.0

Design Services

SOS proposes that the detail of the project with regards to design services be tracked on a benchmark bases. Each step in the design process for all projects can be documented and made available for review at any time. Interaction with A&E will be documented as well with required tasks and timeframe for all involved included in the reporting. If SOS is contracted to provide project management services, SOS would provide reporting for all aspects of the project. If contracted for design services only, reporting would be limited to areas under design services. It is recommended that access to time lines, task listings and reporting be achieved through the use of the web site.

In the event the Smart Office Systems is unable to complete a project by the specified timelines, an outside Design Firm will be contracted to complete the project.

Current design software included AutoCAD R2005, Giza, Cap Studio and SOS web based design software. Any system that is compatible with AutoCAD is compatible with SOS's systems.

1.204 INSTALLATION SERVICES

Installation Services Specifications

Installer Qualifications

Contractors

All SOS contracted installers will be authorized by Smart Office Systems to install its entire product offering. See the attached list of Smart Office Systems authorized installation contractors. SOS authorized installation contractors have the following requirements:

- 5 years experience installing new and or remanufactured office furniture.
- Working knowledge of all applicable fire, safety and barrier free codes as well as the Americans with disability act.
- Installation contractor's staff will consist mainly of experienced installation professional with a minimum of 1 year experience installing new or remanufactured office furniture.
- Unskilled installation staff (less than 1-year experience) will not represent more than 20% of the crew assigned to any give project. Primary function of unskilled installation staff will be material handing

Project management

An installation coordinator will be assigned to each project prior to the start of each project, this coordinator will be assigned to this project for it's entirety. The installation coordinator in conjunction with the SOS project manager will work closely with the State of Michigan project manager to establish the following;

- Scope of work
- Schedule of events
- Building/Facility requirements
- Scheduling the appropriate staff to complete the project

Timeframes

The SOS project manager and State of Michigan customer service representative will work closely with the State of Michigan project manager to establish the following;

- Installation coordinator
- Delivery and Installation time frames

Back-up Plan

- SOS will work with its authorized contractors to insure that they have the necessary man power to complete projects with in the pre-determined time frames set by the Sate of Michigan.
- In the events that a project is running behind or other unforeseen delays, SOS will coordinate the efforts of multiple SOS authorized installation company to achieve an installation staff capable of completing the project on time.

Installation requirements

The SOS project manager / State of Michigan customer service representative will work closely with the State of Michigan project manager to schedule the delivery and installation of products and services purchased. SOS will require the following from it's installation contractors;

- Contractor will provided adequate installation staffing and equipment will be present on the job-site to un-load and stage incoming product.
- Contractor will un-package, sort and separate product per the installation design plan.
- Contractor will provide qualified installation personal to check in and verify the quantity of product received. Provide signed receiving documentation to the State of Michigan project manager and notify the State of Michigan project manager of any discrepancies.
- Contractor will provide an adequate quantity of installers with the necessary skill sets to complete the installation per the Installation design plan.
- Contractor will be responsible for doing a final wipe down of the product installed to remove dust and dirt that has accumulated during the installation.
- Contractor's installation coordinator will do a final walk through with his install staff to insure that all products have been wiped down, all packaging has been removed and all product is functioning properly.
- Contractor will provide to SOS project manager and the State of Michigan project manager a list of any products that are needed to complete the project per the Installation design plan, with an explanation of why it was needed.

Compliance with Installation Design plan

- Installation contractors will install office furniture per the installation design plan; only changes requested by the State of Michigan project manager in writing will be completed.

Daily schedule / Project meetings

- SOS project manager / State of Michigan customer service will provide a schedule of events prior to the start of each project. This schedule will include a progress meeting as deemed necessary by the SOS project manager and State of Michigan project manager.

Project cost

Projects consisting of only remanufactured furniture will be charged as follows;

- Installation % times the net price of the furniture to be delivered and installed. Installation will be determined by the location and quantity of product being ordered.
- Projects consisting of existing furniture and the addition of remanufactured furniture will be charged as follows
- Five days or less following the pre-construction review meeting SOS's installation contractor will provided an estimate of the hours required to complete the project. This estimate will include a detail of the steps and associated hours to complete the project.
- Rate per hour will be charged based on the location of the project and labor classification of the installer.
- Projects that require the disassembly and removal of existing furniture in addition to installing remanufactured furniture will be charged as follows.
- The actual time required to de-install, remove, transport and install the project, times the appropriate labor rate.
- Rate per hour will be charged based on the location of the project and labor classification of the installer.
- Installation contractor will be responsible for getting a daily time sheet signed off by the State of Michigan project manager.

Small Projects

Small projects defined as 20 stations or less will be charges as follows;

- The actual time required to deliver, de-install, remove, transport and install the project, times the appropriate labor rate.
- Rate per hour will be charged based on the location of the project and labor classification of the installer.
- Installation contractor will be responsible for getting a daily time sheet signed off by the State of Michigan project manager.
- Small projects will be completed with in the time frames requested by the State of Michigan project manager. No more than 10 working days from the receipt of a complete request.

Bench Marks

- See attached Appendix C, Pricing Sheets, Time Studies

Move-in Support

- SOS project manager will schedule a post installation walk through with the installation contractor and the State of Michigan project manager. The purpose of this walk through will be to identify any issues with the installation and correct and minor issues.
- SOS will provide installation staffing on-site for move in day. The amount of man power to be provided will be coordinated between the State of Michigan project manager and the SOS project manager. The purpose of this install staff is to facilitate minor adjustments.

Installation Quality

- Only experienced professional installation firms are authorized to install Smart Office Systems products, this insures the highest quality of installation in the industry.
- Each project will have an installation coordinator assigned to it for the duration of the project.
- Each project will have an SOS project manager assigned to it for the duration of the project. In addition to managing the entire project, the project manager's responsibilities will include coordinating the efforts of multiple contractors and providing project oversight.
- The installation coordinator and SOS project manager will conduct daily project reviews of the quality and progress of the installation. Any issues resulting from this review will be immediately resolved to the satisfaction of the State of Michigan project manager.

1.205 PREMIUM SERVICES

Premium Services is defined as design and installation services available for evenings (between 5:00 p.m. and 7:00 a.m.) and weekends (Saturday and Sunday). Premium service charges are only applicable when requested by the State. Premium services are applicable to State holidays which are as follows:

New Year's Day; Martin Luther King Day; Presidents' Day; Memorial Day; Fourth of July; Labor Day; Veterans' Day; Thanksgiving Day; Friday after Thanksgiving; Christmas Eve Day; Christmas Day; and New Year's Eve Day

Premium Design Services

Premium design services will be available to the State of Michigan to accommodate projects that require after hour, week end or Holiday installation. Reasonable notice is required to insure adequate staffing can be secured.

Premium Design is defined as work that is being performed under the following guide lines.

- Week days between the hours of 5pm and 7am
- Saturday and Sunday between the hours of 5pm and 7am
- Saturday and Sunday between the hours of 7am and 5pm
- State Holidays

Premium Design Services will be charged at the following rate

- Week days between the hours of 5pm and 7am: Hourly rate $ 52.50 per man hour
- Saturday and Sunday between the hours of 5pm and 7am: Hourly rate $ 70.00 per man hour
- Saturday between the hours of 7am and 5pm: Hourly rate $ 70.00 per man hour
- Sunday between the hours of 7am and 5pm: Hourly rate $ 70.00 per man hour
- State Holidays: Hourly rate $ 105.00 per man hour

Premium Installation Services

Premium installation services will be available to the State of Michigan to accommodate project that require after hour, week end or Holiday installation. Reasonable notice is required to insure adequate staffing can be secured.

Premium Installation is defined as work that is being performed under the following guide lines.

- Week days between the hours of 5pm and 7am
- Saturday and Sunday between the hours of 5pm and 7am
- Saturday and Sunday between the hours of 7am and 5pm
- State Holidays

Premium Installation Services will be charged at the following rate

- Week days between the hours of 5pm and 7am: Hourly rate $ 80.00 per man hour
- Saturday and Sunday between the hours of 5pm and 7am: Hourly rate $ 105.00 per man hour
- Saturday between the hours of 7am and 5pm: Hourly rate $ 80.00 per man hour
- Sunday between the hours of 7am and 5pm: Hourly rate $ 105.00 per man hour
- State Holidays: Hourly rate $ 105.00 per man hour

Reporting

SOS will provide the State with a dedicated web portal with real time access to the following areas:

- List of Projects (Sorted by Agency)
- Status of Projects
- Listing of Product and Services by Project
- Access to Floor Plan and Design by Project
- PO Status
- Invoice Status
- Installation Reporting
- Service Requests and Resolution
- Compliance Reporting
- Itemized Purchase Analysis by Agency for Products and Services
- Administrative Fee Reporting
- MiDEAL Reporting

Reports can be provided in a number of formats. Direct data exchange can also be provided to allow the above data to be downloaded directly to the State for integration into SOM internal reporting.

1.206 RESERVED

1.207 REPORTING

The Contractor shall be able to provide various reports when requested by the State. Examples include itemized report of total items (commodities and services) purchased by all agencies or individual agencies, open invoice reports, delivery compliance reports, quantity reports, service compliance reports, etc.

1.208 SPECIAL PROGRAMS

SOS Smart Office Systems is prepared to provide several programs that will assist the State of Michigan in saving money, provide superior service or reduce / eliminate the impact office furniture has on the environment.

Office Furniture Lease Program:
SOS proposes to lease office furniture (including the services associated with the office furniture) to the State of Michigan through a unique lease program which will dramatically reduce the impact of Capitol expenditures on the budget. This program will be financed through one of the most reputable financial companies within the USA and will provide aggressive lease rates previously non-existent on the market.

The program is broken into 3 separate offerings:

A. Leased Office Space / Office Furniture Lease: SOS will bundle the cost of office furniture into the lease payments made to the land lord for the office space of a given office. The State of Michigan will be responsible for a single monthly bill for fully furnished office space. Ownership of the product is maintained by SOS and the leasing entity.

SOS can also provide complete management of the office furniture after the initial installation of office furniture is complete. SOS will be responsible for all reconfigurations or additions to the office furniture. When the State of Michigan chooses to move from the existing office space, it is the responsibility of SOS at no charge to the State of Michigan to remove the office furniture.

The intent of this program is to significantly reduce the Capital outlays associated with outfitting an office while providing the flexibility negotiated into leased facilities. The cost of the office furniture would be spread over the duration of the lease and would be treated as an expense as opposed to capitol expenditure. Under this program, leased facilities would come ready for occupancy – fully furnished; all future design fees, reconfiguration costs and maintenance fees would be included in the monthly lease rate as would the removal of the office furniture at the end of the lease.

Example:

Leased office space: 10,000 square feet
Lease term: 6 years
Rate for office space only: $16.00 / square foot / year
Rate for office space fully furnished: $18.50 / square foot / year

B. Owned Office Space / Office Furniture Lease: This program is similar to the “Leased Office Space” program but it is tailored to office space owned by the State of Michigan. The program would allow the State of Michigan to outfit an entire office and then lease the office furniture over a predetermined period of time.

SOS can also provide complete management of the office furniture after the initial installation of the office furniture is complete. When the State of Michigan chooses to move from the existing office space, it is the responsibility of SOS at no charge to the State of Michigan to remove the leased office furniture.

The intent of this program is to significantly reduce the Capital outlays associated with outfitting an office while providing the maximum amount of flexibility. The cost of the office furniture would be spread over the duration of the lease and would be treated as an expense as opposed to capitol expenditure. Under this program, owned facilities would come ready for occupancy – fully furnished; all future design fees, reconfiguration costs and maintenance fees would be included in the monthly lease rate as would the removal of the office furniture.

Example:

Owned office space: 10,000 square feet
Lease term for office furniture: 6 years
Monthly Lease rate: $2,083.33

C. Lease – Buyback Program: This program is designed for State of Michigan offices, leased or owned which have already been fully outfitted with office furniture but the State of Michigan is interested in converting the owned office furniture into leased office furniture.

SOS will evaluate the office furniture within the office the State of Michigan is interested in converting from owned to leased office furniture. A fair market value for the office furniture would be determined. SOS would purchase the office furniture from the State of Michigan for the fair market value and provide a lease back to the State of Michigan for the office furniture now owned by SOS yet still utilized by the State of Michigan.

This option allows the State of Michigan the ability to convert fixed assets which have been paid for through a capital outlay into cash which can be directed back to the General fund. The expense is then spread over the term of the lease.

If the office furniture is located in a facility owned by the State of Michigan a lease would be arranged between SOS and the State of Michigan. Under this situation payment would be made directly to SOS.

This program, if fully implemented could reap a wind fall of cash for the general fund of the State of Michigan within a given fiscal year or years. When one reviews the purchases of office furniture over the past 15 years by the State of Michigan the lease – buyback program has the ability to generate $10 - $150,000,000. The lease obligation would be repaid in subsequent years at a point when the State of Michigan is more able to afford it. Due to the State of Michigan's strong credit rating, the lease rate would be exceptionally aggressive.

Web-Site:
SOS throughout this proposal will refer to a unique web-site designed specifically to meet the needs of the State of Michigan. The web-site is designed to simplify all aspects of designing, purchasing, tracking, coordinating, delivering, installing and servicing office furniture.

The web-site will allow the Department of Management and Budget access to all projects being managed by SOS for all departments throughout the State of Michigan. SOS will also provide all reports required by the SOM online as well as a complete catalog of all products offered by SOS.

The web-site will also allow each department to view previously owned workstations, compare their needs to available as-is inventories and request a designer to determine if the departments needs can be met through the use of previously owned office furniture.

The web-site is referenced throughout this proposal but it should be noted that when implemented it will save the State of Michigan money, improve service to each specific department as well as DMB, assist in helping the State of Michigan meet both the letter and intent of Executive Directive No. 2005-4.

Ultra Quick Ship:
SOS is prepared to provide an "Ultra Quick Ship" program which will allow a department within the State of Michigan to have SOS deliver no more than 50 work stations in 72 hours or less. This program is designed for emergency situations where office furniture is needed immediately.

There is a limit of 50 workstations which can be ordered under this program. SOS will provide 2 standard selections in colors and finishes. These selections will be based on the standards program in place at the State of Michigan. The time frame does not include the installation or design of the product. The time frame begins with an approved order and ends when the product leaves the SOS plant.

The cost of this program will be 33% more than the rapid response program.

AS-IS Haworth Systems Furniture Program:

As a special program, Smart Office Systems would like to offer the State of Michigan the following AS-IS systems furniture program for Haworth Unigroup product.

All Smart Office Systems AS-IS systems furniture goes through the following process

Sorting

- All products are hand sorted to remove any damaged or outdated product.
- All damaged or outdated product is removed and discarded

Cleaning

- All fabric is steam cleaned to remove any soiling or stains
- All laminate and painted surfaces are wiped down to remove any dirt or debris.

Inventoried

- All AS-IS products are inventoried by product type and color.
- All AS-IS inventories are listed and available for viewing on Smart Office Systems wed site.
- AS-IS inventory listings are up dated as product is sold to insure an accurate accounting of what products are available.

Warehousing

- AS-IS inventory is palletized, shrink wrapped and warehoused separately in Smart Office Systems warehouse.

Smart Office Systems AS-IS Haworth Unigroup systems furniture carries the same warranty as Smart Office Systems remanufactured Haworth Unigroup. Please reference Appendix K for the warranty information.

Delivery programs

Smart Office Systems AS-IS Haworth Unigroup systems furniture is available on the following delivery programs

.

Standard Delivery

- 35 calendar days

Express Delivery

- 21 calendar days

Rapid Response

- 7 calendar days

Pricing

Please see Appendix C, Pricing Sheets, Dual Award Discounts, AS-IS for the discounting structure for the above products.

Systems Furniture Buy Back Program

As a special program, Smart Office Systems would like to offer the State of Michigan the following Systems Furniture Buy Back program for Haworth Unigroup systems furniture.

Product purchase schedule before removal charges

Product Manufacturer	% of list paid for standing product	% of list paid for warehouse product

Haworth Unigroup Normal business hours (8am to 5pm Monday – Friday)	1.25% minus removal charges	1.25%
Haworth Unigroup Outside of Normal business hours (After 5pm Monday – Friday Saturday and Sunday)	1.25% minus premium removal charges	1.25%

The above Haworth buy-back percentages are to be off set by removal cost to be defined below.

Herman Miller Normal business hours (8am to 5pm Monday – Friday)	1.25% minus removal charges	1.25%
Herman Miller Outside of Normal business hours (After 5pm Monday – Friday Saturday and Sunday)	1.25% minus premium removal charges	1.25%

The above Haworth buy-back percentages are to be off set by removal cost that is defined below.

Removal charges

The above percentages will be multiplied by the list price (manufactures most current list price) of the product to be purchased to establish the pre removal purchase price. The following charges will be reduced from the pre removal purchase price to determine the net purchase price.

Normal business hour removal charges

- Drive time to and from job site billed at $55 per man hour when product location is more then 50 miles from a Smart Office Systems authorized installation provider.
- Labor to de-install and remove product at $55 per man hr.
- When a removal requires an overnight stay, lodging/per diem will be charged at $75 per night, per man. An overnight stay will only be required when the estimated drive time and work time would exceed 12 hours in one workday.

Premium removal charges

- Drive time to and from job site billed at (see premium installation charges) per man hour when product location is more then 50 miles from a Smart Office Systems authorized installation provider.
- Labor to de-install and remove product at (see premium installation charges)
- When a removal requires an overnight stay, lodging/ per diem will be charged at $100 per night, per man. An overnight stay will only be required when the estimated drive time and work time would exceed 12 hours in one workday.

Payment for Product

- Product will be removed and delivered to SOS Lansing, and a complete inventory of the product will be completed. This inventory complete with list prices will be provided to the State Of Michigan with payment per the above schedule.
- On some projects the charges for travel and lodging may exceed the value of the product. In this scenario, SOS will invoice the State of Michigan for the difference in value (see above product purchase schedule) and the cost associated with removal (see removal charges)
- Payment will be made within 45 days of receiving product.
- SOS will provide the State of Michigan a list of products that have been deemed by SOS to have no value.

Non Haworth or Herman miller removal

Removal and disposal of non-Haworth and Herman Miller systems furniture will be bid on a case by case basis. A typical one station removal cost for product in Lansing, Mi, with the product being delivered to State Salvage would average $125-$150 per station.

Location of product, time frame and load out conditions could cause an increase in price per station.

1.209 PROJECT COORDINATION

The charge for project coordination would be in addition to any DESIGN SERVICES and INSTALLATION charges incurred by an agency, in order to have the same company coordinate the entire project. This could include coordinating and scheduling any electrical and carpeting work that needs to be done in conjunction with modular installation as well as coordinating the delivery of furniture ordered from other State Contracts such as tables, chairs, desks, file cabinets, etc. This figure is expressed as a dollar amount per hour. The company handling the Project Coordination shall provide an estimate of the hours that will be required to coordinate the project within five (5) calendar days after notification by the agency.

The State reserves the right to include these programs in this Contract; however, the State is not obligated to use these programs

Project Management through SOS covers all facets of a new or renovation project. Services include, but are not limited to:

- Product Specifications
- Coordination of all Product Ordering, Delivery and Installation
  - Furniture
  - Carpet
  - Wall Coverings
  - Window Treatments
  - Any and All Products and Services Ordered for the Project
- Coordination of Trades – Architectural, Mechanical and Electrical
- Coordination of Communication Trades
- Development and Implementation of Moving Schedule and Labor
- Punch list and Project Closeout

Estimated pricing for a project will be provided within (5) calendar days after notification by the agency at a rate of $48.00 per hour.

1.211 REFURBISHED PRODUCT

This contract is for refurbished furniture only. Refurbished furniture is defined as product that has been previously used, owned, leased, sold as new, or refurbished in any way. Refurbished furniture is defined as furniture that has been serviced including but not limited to; cleaned, fabric change, re-painted, or re-laminated. Prices are for refurbished product only.

1.212 RESERVED

1.213 RESERVED

1.214 E-COMMERCE CAPABILITIES

The State of Michigan is working to evolve its acquisition process from one driven by paperwork into an expedited process based on electronic commerce/electronic data interchange (EC/EDI). EC/EDI means more than merely automating manual processes and eliminating paper transactions. It can and will help to move business processes (e.g., procurement, finance, logistics, etc.) into a fully electronic environment and fundamentally change the way organizations operate. Therefore, the State is interested in E-Commerce programs available under this Contract.

The ability to quickly and efficiently access data is paramount to the success of any complex program. SOS has successfully focused on this task and is offering to create a customized web interface for the State. A web portal of this type will allow complete access to all aspects of a project. From the initial contact with an Agency to the documented close out of the project, all data can be accessed through the web site. Categorized by Agency and Project, easy to navigate tools will allow real time access to project data. Some of the areas to consider for web access are as follows:

- E-Catalog
- Fabrics and Finish Options
- Product Specifications
- Environmental Message
- Time Frames - Quick Ship Options
- Design Typicals
- Design Procedures
- Project Management
- Order Process
- PO Process
- Installation Procedures
- Project Status
- Service Requests
- Buy Back Options
- Reporting
- Compliance
- Project/Service Approvals
- Management of the PO/Invoice Process
- Direct Downloads for Integration into State Reporting
- Access to Floor Plans and Product Listings. AutoCAD and PDF Format.
- Inventory Controls

1.215 PRODUCT/COLOR /FABRIC INFORMATION

The date of the manufacturer's printed list price catalog for the product being offered:

SOS Refurbished Haworth - January 1, 2008
Alternate Refurbished Pedestal Files – September 1, 2008

Upon request, the contractor will be required to provide to the various State agencies, at no additional cost to the State, product specification pricing catalogs and brochures.

All standard paint colors, laminate colors, and Grade A fabric colors currently available from the contractor shall also be available to the state at the contract prices. Upon request, the various State agencies may require sets of the standard colors (swatches) that the state chooses to be available on the Contract. These shall also be supplied at no additional cost to the state.

LATERAL FILES: All standard paint colors shall be available to the State of Michigan. The state will choose which colors are to be included in the Contract.

Upon request, the contractor will be required to provide color sheets displaying ONLY those colors selected by the State of Michigan to be included in the Contract. These color sheets are to be provided at no additional cost to the state, for distribution to State agencies.

1.214 RESERVED

1.217 E-CATALOG/BROCHURES

The State intends on utilizing electronic product and pricing catalogs for those products placed on this Contract. The intention of an electronic form of product and pricing catalogs would be to create a more effective and efficient means of Contract product and pricing distribution throughout the State agencies and end users.

SOS will provide the catalog primarily through the dedicated web site. Upon the request of an Agency, SOS will provide a copy on disk or hardcopy.

SOS can provide electronic pricing that will reflect the Manufacturers Unit Pricing and or State Discounted Net Unit Pricing. SOS will provide the format as directed by DMB.

SOS maintains the catalog in house, all updates or modifications will be approved by DMB prior to updating the catalog on the web site. If requested, notification to all Agencies will be done via email showing a link to the updated catalog. Minimum requirement is access to the Internet. All catalogs are web based and easily accessible.

SOS internally uses a web based catalog for its products. Customers such as General Motors utilize a similar web interface with SOS to communicate product information and program details. Access to the Saturn web site is as follows:

Location: http://saturn.smartofficesystems.com/login.asp
Password: 2red2

Access the “Products and Options” area of the site on the top bar. This area is the catalog for available products. Areas such as “Sales Station” show a number of typicals, a similar approach can be integrated into the SOM site.

SOS will provide training on accessing the web, product catalog and maximizing the use of both.

1.218 ORDER/INVOICE/RECONCILIATION

The State is interested in streamlining the ordering/invoicing/reconciliation process in order to minimize the number of invoices issued for a single purchase order. It would be a preference of the state that the format of invoices and purchase orders follow a similar format to simplify the reconciliation process.

SOS proposes that the process be streamlined as follows:

- State Department issues a Purchase Order Form referencing this Contract (Blanket Purchase Order). The process of which to be determined. Proposing that it takes place though the web site.
- If DMB requests, PO can go though an approval process via the web site. SOS would not process order without this approval.
- Once approved, project will be tracked by PO number. All reports and access to project information will reference the PO number.
- A copy of the PO will be attached to the project and be accessible through the web site.
- Invoice will clearly show Blanket Purchase Order number and Purchase Order number from the issuing Department. A copy of the invoice will be attached to the project and be accessible through the web site.
- SOS will provide a report showing a projects PO amount, Invoice amount and difference between the two if any.

The billing cycle for a typical project is one to two days from the date of installation. Typically services such as Project Management, Design and Installation are billed at the same time at the completion of the project. Larger or longer lead time projects may generate Project Management and Design billings ahead of the completion of the project.

In summary, SOS is proposing providing the State with a resource to access all project information including billing. Any questions or concerns that arise can quickly be answered when all the documents, forms and related information regarding a project are in one place with access via the web.

1.219 SECURITY

This Contract may require frequent deliveries to State of Michigan facilities. Upon review of the security measures provided by the contractor, the State will decide whether to issue State ID badges to the contractor's delivery personnel or accept the ID badge issued to delivery personnel by the contractor.

The State may decide to also perform a security background check. If so, the contractor will be required to provide to the State a list of all delivery people that will service State of Michigan facilities, including name and date of birth (social security number of driver license number would also be helpful). For confidentiality reasons, the information submitted for the security background checks will be destroyed once the check is completed and will not become part of the Contract file.

The Contractor and its subContractors shall comply with the security access requirements of individual State facilities.

Currently Smart Office Systems is not requiring any back ground check on its employees or contractors.

The following are Smart Office Systems contractor requirements.

- All contractors' staff must wear a uniform identifying the company that they are representing.
- All contractors' staff must have a drug policy to include the following.
    - Zero tolerance
    - Pre-employment drug screening
    - Random drug testing

Smart Office Systems and its contractors will commit to the following.

- Contract with a State of Michigan approved company to provide back ground checks on all staff that is assigned to this contract.
- Upon request by the State of Michigan, provide the result of these back ground checks.
- Provide the necessary information to allow the State of Michigan to conduct its own back ground check on staff that is assigned to this contract.

1.220 DESIGN PROGRAMS

The State reserves the right to include these programs in this Contract; however, the State is not obligated to use these programs. The contractor may be expected to demonstrate these programs if requested by the State.

SOS Design Department uses CAP Studio, AutoCAD 2004/2005 and SOS Design Software. The Haworth symbols libraries were developed and are proprietary to SOS and are compatible with AutoCAD 2004/2005 and CAP Studio. SOS also can utilize the Haworth symbols library within CAP Studio when necessary. All other library symbols are pulled from CAP Studio and incorporated in AutoCAD drawing and project specifications.

Presentation and tracking of designs and proposals will be accessible through email or the web site. All can be viewed by use of Adobe PDF.

SOS Design Software can be linked with a number of inventory systems. Tracking existing installed and warehoused product can easily be accomplished through SOS's current inventory tracking system. Linking floor plans with product inventory allows for the greatest flexibility and is recommended. A more detailed solution can be provided by SOS after identifying the State's specific needs, current format of existing drawings and extent of available as-builts.

1.221 STORAGE

The State may determine a need for storage beyond (7) seven days beyond the original agreed upon delivery date. Pricing for storage is included as an optional program in Appendix C on the Additional Information Sheet. The State reserves the right to include storage in this Contract; however, the State is not obligated to use this program.

1.222 CLEANING SERVICES

The State reserves the right to include these programs in this Contract; however, the State is not obligated to use these programs.

1.223 RE-FABRIC/RE-LAMINATE SERVICE

The State reserves the right to include these programs in this Contract; however, the State is not obligated to use these programs.

1.224 PAINTING SERVICE

The State reserves the right to include these programs in this Contract; however, the State is not obligated to use these programs.

1.3 Delivery Capabilities

1.301 TIME FRAMES

a. REFURBISHED OPEN SPACE OFFICE FURNITURE

1. Standard Delivery Program

Standard Delivery programs should include data addressing delivery of product to dealer locations, state owned warehouses, and/or directly to job-site on a just in time basis.

Product: 35 days from receipt of order
There are no quantity, color or finish restrictions. (See finish selections provided within this proposal) There are no restrictions as to the point of delivery of product within the State of Michigan. SOS is prepared to complete "just in time" deliveries where needed.

Design: 15 days
There are no limitations regarding the work requested for design services.

Installation: 15 days
There are no limitations regarding the work requested for installation services.

2. Express Delivery Program

Product: 21 days from receipt of order
There are no quantity, color or finish restrictions. (See finish selections provided within this proposal) There are no restrictions as to the point of delivery of product within the State of Michigan. SOS is prepared to complete "just in time" deliveries where needed.

Design: 10 days
There are no limitations regarding the work requested for design services.

Installation: 10 days
There are no limitations regarding the work requested for installation services.

3. Rapid Response Program:

The Contractor may be requested to work with the State of Michigan to develop an optional customized rapid response program for the basic line indicated in the Appendix B - "Refurbished Open Space Office Furniture Product Lines By Category" sheet. The rapid response program is defined as a mutually agreed selection of standard workstations that can be delivered and/or assembled within seven (7) calendar days. The successful Contractor may be responsible for maintaining and inventorying approximately 25 workstations at any given time.

Rapid Response Program: This program offers incredibly fast delivery of Haworth remanufactured office furniture with a limited selection in quantity of product available, colors and finishes. SOS is prepared to deliver up to 50 workstations in 7 days. The time frame does not include the design or installation of the product. The time frame begins with an approved order and ends when the product leaves the SOS plant.

Product: 7 days
There is a limit of 50 workstations which can be ordered under this program. SOS will provide 2 standard selections in colors and finishes. These selections will be based on the standards program in place at the State of Michigan. The time frame does not include the installation or design of the product. The time frame begins with an approved order and ends when the product leaves the SOS plant.

Design: 3 days
There is a limit of 50 workstations which can be designed within this time frame. The time frame begins with an approved design request and ends with a complete design returned to the client, ready for the installation of office furniture.

Installation: 3 days
There is a limit of 50 workstations which can be installed within this time frame. The time frame begins with an approved layout and all products required to complete the project available on-site and ends with a completed installation which may still require minor service.
Rapid Response Finishes:
Fabric – Guilford of Maine, Lido 2858
Laminate – Wilson Art 7909-60 Fusion Maple
Paint – Grey Tone and paint samples

Availability: 50 workstations will be available on August 1, 2008.

4. Premium Delivery Program
All orders shall be shipped directly to the department submitting the order at the address indicated on the individual Purchase Order. The billing address for a particular order will also be indicated on the individual Purchase Order.

Note: There shall be no inside delivery charges on orders that included INSTALLATION since unloading the furniture is a part of the installation process.

Premium Delivery Programs will be available to the State of Michigan to accommodate projects that require after hour, week end or Holiday installation. Reasonable notice is required to insure adequate staffing can be secured.

Premium Delivery Programs are defined as work that is being performed under the following guide lines.

- Week days between the hours of 5pm and 7am
- Saturday and Sunday between the hours of 5pm and 7am
- Saturday and Sunday between the hours of 7am and 5pm
  State Holidays

5. Ultra Quick Ship
SOS is prepared to provide an "Ultra Quick Ship" program which will allow a department within the State of Michigan to have SOS deliver no more than 50 work stations in 72 hours or less. This program is designed for emergency situations where office furniture is needed immediately.

There is a limit of 50 workstations which can be ordered under this program. SOS will provide 2 standard selections in colors and finishes. These selections will be based on the standards program in place at the State of Michigan. The time frame does not include the installation or design of the product. The time frame begins with an approved order and ends when the product leaves the SOS plant.

The cost of this program will be 33% more than the rapid response program.

b. LATERAL FILES

Prices are for each of the (6) six regions indicated In Appendix E – Zone Map for the following delivery options:

1. Drop Ship
The product shall be moved to the end of the trailer by the carrier personnel. The agency is responsible for unloading or making arrangements to have it unloaded. Merchandise shall be inspected by the receiving personnel and accepted or rejected. Upon acceptance and signing the appropriate delivery forms, the Contractor is responsible for no further services pertaining to

delivery. Latent or hidden damage claim shall be handled in accordance with standard industry policy and procedure.

2. Inside Delivery

Many State offices may not have the manpower or equipment to move the Lateral Files from the rear of the truck to the actual ordering agency. Therefore, inside delivery (set in a sheltered area on the ground floor) shall be furnished by the Contractor when requested by the ordering agency. When inside delivery is required, it will be stated on the order and shall also be Stated by the Contractor on the Bill of Lading and Invoice. If the delivery will be made by common carrier, the inside delivery charge will be $45.00 per shipment up 500 pounds total. Any shipment over 500 pounds will be negotiated between the State and the contractor. There shall be no inside delivery charges on orders that include INSTALLATION, since unloading the furniture is a part of the INSTALLATION process.

3. Delivered and Installed

Installation requires that the Contractor or an authorized dealer/distributor unload the file cabinet from the delivery truck onto the loading dock/receiving platform, uncrate the file cabinet, transport the file cabinet to the customer specified location, make necessary adjustments including leveling, make sure file cabinet is fully operational, check for damage, prepare all paperwork regarding damage claims, initiate follow-up orders for replacement file cabinets or parts to repair damaged product, make required repairs when replacement parts are available, deliver replacement file cabinets when initial cabinet ordered was received damaged, remove all damaged product, and dispose of all cartons.

1.302 MINIMUM ORDER

There will be no minimum order requirements.

1.303 F.O.B. POINT

Prices are F.O.B. Delivered with transportation charges paid by the Contractor on all orders.

1.304 PACKAGING/ASSEMBLY/LABELING/PALLETIZING

Please note that the following PACKAGING, ASSEMBLY, LABELING, and PALLETIZING terms apply to all orders that DO NOT include installation. For orders that DO NOT include installation, it is required that the delivery of the furniture and files meet these requirements, no exceptions. This includes all deliveries to State-owned warehouses or job sites. However, for orders that DO include installation, it is acceptable for the Contractor to package, assemble, label, palletize, and deliver the product according to their standard practices.

a. PACKAGING

To minimize waste, blanket wrapping is encouraged for orders being delivered directly to the ordering agency for immediate installation. Blanket wrapping is NOT ALLOWED for orders delivered to a warehouse operation.

All major components shall be packaged ready for installation, including all necessary parts and hardware. For example, panels, hanging shelving units, flipper doors, hanging lateral file drawers, etc. must be packaged with side rails, top rails, locks, guides, etc. Screws, clips, connectors, and all other necessary hardware required to install an item must be individually packaged and included with the primary item.

Packaging and containers, etc., shall be in accordance with supplier's commercial practice and shall meet the requirements of Department of Transportation (D.O.T.) and rail and motor carrier freight classifications in effect at time of shipment, which will permit application of the lowest freight rate.

When palletizing is required (warehouse) or requested, there shall be no additional cost to the state for the pallets, and the pallets become the property of the State of Michigan upon delivery.

Packaging and containers, etc., shall be in accordance with supplier's commercial practice and shall meet the requirements of Department of Transportation (D.O.T.) and rail and motor carrier freight classifications in effect at time of shipment, which will permit application of the lowest freight rate.

LATERAL FILES: Unless otherwise stated, normal commercial packaging and packing will be acceptable. All packing shall be adequate to protect the filing cabinets from damage. All file cabinets shall be packaged pre-assembled, ready for installation, including all necessary parts and hardware. Blanket wrapping is acceptable if requested by the ordering agency.

All boxes/packages shall be properly labeled. Labeling shall include, but is not limited to: name of the product and short description (i.e., 36", five high lateral file, etc.), manufacturer's catalog number, State of Michigan Purchase Order number, and color.

Panels
Stacked on a pallet with bubble wrap separating each panel. Top is covered with fabric and panels are shrink wrapped and banded to the pallet.

Overhead Doors and Tackboards
Boxed and banded to the pallet

Work Surfaces
Stacked on a pallet face to face and back to back. Surfaces are shrink wrapped and banded to the pallet.

Shelving and Connectors
Wrapped in foam and shrink wrapped to the pallet

Miscellaneous Product
May be wrapped in foam, bagged or boxed depending on best application for the particular items. Items are arranged on a pallet and shrink wrapped to the pallet.

Casegoods / Seating
Packaged from the OEM. May be wrapped and banded to a pallet depending on size of item(s).

b. ASSEMBLY

All items shall be delivered ready to install. Items shall not require any major pre-installation assembly. For example, panels, hanging shelving units, flipper doors, hanging lateral file drawers, etc. shall consist of primary component parts such as side rails, top rails, locks, guides, etc. Screws, clips, connectors, and all other necessary hardware required to install an item can be unattached but must be individually packaged and included with the primary item. Requiring minor assembly of connectors, etc. after removal from the box is acceptable. Items that are totally broken down into small components are UNACCEPTABLE.

Installation to be provided by Smart Office Systems or an approved contractor designated by Smart Office Systems. All items are delivered ready to assemble. Minor assembly of connectors, etc. to be performed on-site after removal from the packaging. Installation crew is trained to perform required assembly.

c. LABELING

All boxes/packages shall be properly labeled. Labeling shall include, but is not limited to: name of the product and short description (i.e. 48" x 60" panel, etc.), manufacturer's catalog number, State of Michigan Purchase Order number, quantity, and color.

Boxes and packages shall be labeled so the installation crew can easily identify the product.

d. PALLETIZING

Shipments shall be palletized whenever possible and shall conform to the following:

- Manufacturer's standard 2-way or 4-way shipping pallets are acceptable.
- Maximum height: 74"; including pallet. This also applies to stacked pallets.
- Maximum weight: 2,000 pounds; per single unstacked pallet, including pallet.
- Pallets are to be securely banded and/or shrink-wrapped. Loads shall not exceed the size of the pallet, and material shall not overhang pallets.
- Material shall be palletized in such a manner that will make receiving of goods easily identifiable, without unloading pallet and merchandise. Mixing of commodities will not be allowed, unless identification is easily performed. Like items and colors are always to be palletized together. Boxes shall be stacked on pallets with the labels facing the outside.
- There shall be no additional cost for palletizing.

Other shipments, including those directly to an installation location, MAY also be requested as palletized deliveries, and if requested, shall also conform to the above requirements. For orders that include installation, the pallets belong to the Contractor.

1.305 DELIVERY/SHORT TERM STORAGE

The Contractor must be committed to providing the maximum flexibility for scheduled delivery of product when required by the State. This may involve the Contractor to closely monitor the project and to communicate on regular basis with the State, specific to the scheduling of furniture delivery and installation. This may also involve the Contractor to participate in State construction meetings, to provide shorter delivery lead times, to provide compressed manufacturing times, and to provide for either delay of product delivery or to provide "short term" storage up to seven (7) calendar days at no cost to the State, when a building for a certain project is not ready for furniture to be received. The seven (7) day period shall begin from the date the product is scheduled to deliver. The goal for this Contract is to provide for a JUST IN TIME (JIT) furniture delivery process, as deemed possible.

Specialized warehouse storage and handling needs (i.e. long term storage, product re-utilization, rapid response, inventory management, etc.) may be specifically identified and required in the future by the State. Possible future programs may require that specialized warehouse storage and handling services be developed. The specific services and any fees associated with those programs will be handled by the State and Contractor on a case-by-case basis.

Delivery Times

Smart Office Systems is capable of flexibility in its manufacturing and delivery schedule. This allows the State of Michigan maximum flexibility in manufacturing lead times and delivery time frames.

Short Term Storage

Since Smart Office Systems is the manufacturer and the distributor, no product will ship to a job-site until the following has occurred

- Job site is ready to receive products and all parties involved have been informed.
- State of Michigan project manager and Smart Office Systems project manager have determined that it is in the best interest of the State of Michigan to deliver to a job-site prior to the site being ready.

There will be no charge for product storage due to project delays for the first 30 days following the original ship date.

- Product storage past the first 30 days will be considered long term storage.

Long Term Storage

Product shipments that are delayed for more than 30 days past the original ship date will be considered long term storage and billed at the following rates.

- 55 cents per sq. foot per month.
- Charges are assessed in one month increments.

Future Warehousing and Storage needs

Smart Office Systems will work closely with the State of Michigan to develop any specific warehousing, storage or material handling needs on a case by case basis.

1.306 DELAYS AND/OR LATE SHIPMENT/DELIVERIES

a. Timely delivery in accordance with the terms and conditions of this Contract is essential to the accomplishment of the mission of the Department of Management and Budget and the agencies it supports.

b. The Contractor shall immediately notify the customer and the Department of Management and Budget in writing if any situation delays or threatens to delay the timely performance of any order. The notification shall include the Contractor's best possible delivery time for the state's approval. If the state does not approve the alternate delivery date (s) (with or without obtaining consideration from the Contractor), the state shall have the right to cancel the order (s) in whole or in part without further liability on the state's part. The state also has the right to purchase the goods elsewhere and/or hold the Contractor accountable for all damages and direct costs resulting from the Contractor's unacceptable delivery date (s).

c. If unapproved late deliveries are made, the state may cancel the order (s) in whole or in part, purchase the goods elsewhere, and/or hold the Contractor accountable for all damages and direct costs resulting from the Contractor's failure to deliver on schedule. Acceptance of a late delivery by the state shall not constitute a waiver of the state's claim for any damage that the late delivery may have caused.

1.4 Project Price

1.401 PROPOSAL PRICING--FURNITURE

a. STATE ADMINISTRATIVE FEE

The Contractor must collect an Administrative Fee on the sales transacted under this Contract. The Contractor must remit the Administrative Fee in U.S. dollars within thirty (30) days after the end of the

quarterly sales reporting period. The Administrative Fee equals 1% of the total quarterly sales reported. Contractor must include the Administrative Fee in their prices.

The Contractor must remit any monies due as a result of the close-out report at the time the close-out report is submitted to Purchasing Operations.

The Contractor must pay the Administrative Fee collected by check. To ensure the payment is credited properly, the Contractor must identify the check as an "Administrative Fee" and include the following information with the payment: State Contract number, report amount(s), and reporting period covered.

In addition, reports must be submitted to the buyer for the period covered by the check. The report must include the date of the check, amount of the check, and the volume of sales the Administrative Fee is based upon for both the State of Michigan and MiDEAL members. The report shall separate the volume and fee amounts for State and MiDEAL members.

QUARTERLY CHECKS:
Contractor must forward the check to the following address:

Department of Management and Budget
Financial Services – Cashier Unit
Lewis Cass Building
320 South Walnut St.
P.O. Box 30681
Lansing, MI 48909

Please make check payable to: State of Michigan

QUARTERLY REPORTS
On itemized quarterly reports, each line shall State the BPO (Contract Number), name of the local unit of government which made a purchase, the item number purchased, the unit cost of the item purchased, the quantity purchased, the sales amount subject to the administrative fee, and the amount of the 1% administrative fee due the State of Michigan.

E-mail Reports to: mideal@michigan.gov and gyorkosl@michigan.gov

Any questions about reports or checks e-mail the address above.
.

b. REFURBISHED OPEN SPACE OFFICE FURNITURE -- BID BY CATEGORY

Listed in Appendix C, are the product lines offered on this Contract with the discounts (percentage (%) off list price) indicated for a Dual Award. The discount was applied from the dated manufacturer's printed list price catalog as indicated on the pricing sheets.

c. REFURBISHED OPEN SPACE OFFICE FURNITURE ITEM LISTING -- DUAL AWARD

Included in this Contract, in Appendix F, is a cluster that includes (6) workstations. This was used by the contractor for pricing of product for both Standard and Express Programs located in the Item Listing pages in Appendix C. The pricing for the item listing represents the discount (percentage (%) off list price) applied for a Dual Award.

d. DISCOUNTS

The percentage (%) discount from the manufacturer's printed list price catalog was used to calculate the prices on each corresponding Item Listing. All products on each Item Listing were calculated using the same percentage discount. The percentage (%) of discount is the lowest discount percentage (%) throughout the Contract period.

All products within the product line of Refurbished Open Space Office Furniture offered on this Contract are available at the percentage discounts indicated.

1.402 PROPOSAL PRICING—DESIGN SERVICES

DESIGN SERVICES INFORMATION SHEET

There are 2 (two) levels of DESIGN SERVICES included in this Contract (refer to the attached Appendix A - DESIGN SERVICES SPECIFICATIONS for specific design requirements):

1. The first level of DESIGN SERVICES is when all Refurbished furniture will be ordered from the Contract (no re-utilization of existing furniture) and needs to be designed. These charges are expressed as a percentage (%) to be multiplied by the total net value of the order for the furniture that will be required. These charges, for various order levels and regions of the state, and delivery options are indicated on the attached Appendix C - DESIGN SERVICES INFORMATION SHEET.

   Please note that the DESIGN SERVICES charge for a particular project shall always be calculated by taking the appropriate percentage (%) from Appendix C - DESIGN SERVICES INFORMATION SHEET multiplied by the total net value of the order utilizing the prices indicated in the Item listing.

2. The second level of DESIGN SERVICES is when a particular project will consist of a combination of Refurbished furniture ordered from the Contract and the re-utilization of some existing furniture. This figure is expressed as a dollar amount per hour for regular hours and premium (evenings and weekends) on the attached Appendix C - DESIGN SERVICES INFORMATION SHEET. Design services at this level must also include the inventorying of existing furniture. The actual time required to complete the design will be multiplied by the dollar amount per hour to determine the cost for designing the project, including transportation time.

   The dollar amount per hour expressed will also apply to projects requiring all refurbished furniture to be ordered from the Contract when the initial DESIGN SERVICES required for the project have been completed in compliance with the attached DESIGN SERVICES specifications. This figure will kick-in when the agency requires additional DESIGN SERVICES (due to further changes, a requirement to meet with each individual in the office, "tune up" design, etc.), above and beyond what is required by the attached specifications. Also, if the designer will be required to identify the quantity and various sizes of other items needed for a project, such as tables, chairs, files, etc., and then must incorporate the space needed for those items into all plans, the dollar amount per hour may be charged for this service.

   Included in Appendix C, are standard time frames generally allotted for various size projects based on the number of workstations. Time frames shall address the following design stages: Schematics Design Block Plan, Preliminary Design Block Plan, Installation Design Plan, and Itemized Parts List.

b. DESIGN CALCULATION SHEET

The percentage for design services is based on Appendix C - "DESIGN SERVICES INFORMATION SHEET" using the column that represents the percentage charge for design services in the Zone 2 – University Region with Standard Delivery for an order equal to or greater than $100,000. That percentage will be multiplied by the total amount of furniture for "Standard Delivery" off the "Item listing" to equal the dollar amount of design services.

1.403 PROPOSAL PRICING—INSTALLATION SERVICES

a. INSTALLATION INFORMATION SHEET

There are 5 (five) different levels of INSTALLATION in this Contract, (refer to the attached INSTALLATION SPECIFICATIONS for specific installation requirements):

The installation charges include prevailing wage.

1. The **first level** of **INSTALLATION** is when all Refurbished Open Space Office Furniture is going to be ordered and workstations need to be installed. These charges are expressed as a percentage (%) to be multiplied by the total net value of the order for the furniture that will be required. These charges, by order level and regions of the State, are indicated on the attached Appendix C - INSTALLATION INFORMATION SHEET.

2. The **second level** of **INSTALLATION** is when Refurbished and existing Open Space Office Furniture workstations need to be installed. This figure is expressed as a dollar amount per hour on the attached Appendix C -INSTALLATION INFORMATION SHEET. The actual time required to complete the installation will be multiplied by the dollar amount per hour to determine the cost for installing the project, including transportation time. Please refer to the attached Appendix E - Zone Map for reference purposes. (See **INSTALLATION** statement in the attached terms and conditions.)

The dollar amount per hour expressed will also apply to projects requiring additional INSTALLATION after the initial INSTALLATION is completed in compliance with the attached INSTALLATION specifications. This figure will apply when the agency requires "tune-up" INSTALLATION or re-configuration due to minor revisions requested by the agency.

If a combination of refurbished and existing product is being installed, the installation shall be charged by an hourly rate unless negotiated by DMB during the technical review.

3. The **third level** of **INSTALLATION** is when workstations need to be installed and the installation requires the breakdown of existing furniture combined with installation of existing and Refurbished Open Space Office Furniture ordered from this Contract. Teardown of existing workstations may or may not include removal. This figure is expressed as a dollar amount per hour on the attached Appendix C -INSTALLATION INFORMATION SHEET. The actual time required to complete the breakdown, installation, and removal will be multiplied by the dollar amount per hour to determine the cost for installing the project, including transportation time. A map is included In **Appendix E – Zone Map** for reference purposes. (See **INSTALLATION** statement in the attached terms and conditions.)

If a combination of refurbished and existing product is being installed, the installation shall be charged by an hourly rate unless negotiated by DMB during the technical review.

4. The **fourth level** of **INSTALLATION** is when workstations need to be torndown, palletized, shrink wrapped, removed and delivered to a specified dock. This figure is expressed as a dollar amount per hour on the attached Appendix C -INSTALLATION INFORMATION SHEET. Please refer to the attached Appendix E - Zone Map for reference purposes. (See **INSTALLATION** statement in the attached terms and conditions.) Order levels are net product values.

5. The fifth **level** of **INSTALLATION** is when workstations need to be re-configured and no additional furniture is needed from this contract. This figure is expressed as a dollar amount per hour on the attached Appendix C -INSTALLATION INFORMATION SHEET. The actual time required to complete the re-configuration will be multiplied by the dollar amount per hour to determine the cost for installing the project, including transportation time. A map is included In **Appendix E – Zone Map** for reference purposes. (See **INSTALLATION** statement in the attached terms and conditions.)

b. INSTALLATION CALCULATION SHEET

The percentage for installation services is based on Appendix C - "INSTALLATION SERVICES INFORMATION SHEET" using the column that represents the percentage charge for installation services in Zone 2 – University Region with Standard Delivery for an order equal to or greater than $100,000. That percentage will be multiplied by the total amount of furniture for "Standard Delivery" off the Appendix C - "Item listing" to equal the dollar amount of installation services. Also included is the contractor's hourly rate per level of installation multiplied by the hours from the time study for the services indicated in Appendix C.

c. REFURBISH SERVICES CALCULATION SHEET

Included in Appendix C are the charges the State would incurr for the contractor to perform specified services relating to refurbishing exsting furniture. These charges are based on the six-workstation cluster on the attached **Appendix F** - "Workstation Cluster. The hourly rate per level of service is multiplied by the hours from the time study for the services indicated below.

d. TIME STUDIES

Appendix C includes the required assembly time to install the six (6) workstation cluster drawings included in Appendix F. This is based on installing the Basic Product Line, according to the installation conditions indicated in Appendix C. These time studies may be utilized as a benchmark throughout the Contract period.

Appendix C also includes the required time to perform the re-furbishing services below using the six (6) workstation cluster drawings included in Appendix F. These time studies may be utilized as a benchmark throughout the Contract period.

e. PREVAILING WAGE FOR INSTALLATION AND OTHER SERVICES

Hourly rates are all inclusive (i.e., prevailing wage, travel, parking) as set forth in Prevailing Wage schedule issued by DLEG included in Appendix G - I**. These prevailing wage rates issued by DLEG are firm for the duration of the contract.**

The prevailing wage hourly rates for installation charged by the Contractor, included in this Contract shall remain firm for the duration of the contract.

Prevailing wage rates only apply to work being performed in State owned, controlled or leased buildings. The non-prevailing wage rate applies to all other work.

The prevailing wage classification is defined as laborer, unless otherwise specified.

1.404 PROPOSAL PRICING--LATERAL FILES

The "Lateral File Cabinets Pricing Sheet" is divided into 6 (six) geographic regions and (3) three service levels:

Drop- Ship
Inside Delivery
Delivered and Installed

Appendix C indicates the percentage (%) discount from the manufacturer's current list price catalog used to calculate the prices for that category of file cabinet in that region and delivery option. The discount is the same for all items within the category for a particular region.

1.405 ADDITIONAL INFORMATION SHEET

Additional services are included on the "Additional Information Sheet" located in Appendix C.

1.406 RESERVED

1.407 QUICK PAYMENT TERMS

The Contractor offers an early payment discount of 1% for invoices paid within 10 days of the invoice (shipment) date. The 1% is applied against product and service costs.

1.408 PRICE TERM

Prices quoted are the maximum for a period of 365 days from the date the Contract becomes effective.

Prices are subject to change at the end of each 365-day period. Such changes shall be based on changes in actual costs incurred. Documentation of such changes must be provided with the request for price change in order to substantiate any requested change. Purchasing Operations reserves the right to consider various pertinent information sources to evaluate price increase requests (such as the CPI and PPI, US City Average, as published by the US Department of Labor, Bureau of Labor Statistics). Purchasing Operations also reserves the right to consider other information related to special economic and/or industry circumstances, when evaluating a price change request. Changes may be either increases or decreases, and may be requested by either party. Approved changes shall be firm for the remainder of the Contract period unless further revised at the end of the next 365-day period.

Requests for price changes shall be RECEIVED IN WRITING AT LEAST 30 DAYS PRIOR TO THEIR EFFECTIVE DATE, and are subject to written acceptance before becoming effective. In the event new prices are not acceptable, the CONTRACT may be cancelled. The continued payment of any charges due after September 30th of any fiscal year will be subject to the availability of an appropriation for this purpose.

ARTICLE 2 – GENERAL TERMS AND CONDITIONS

2.0 Introduction

2.001 GENERAL PURPOSE

This Contract is for Refurbished Open Space Office Furniture and Lateral Files, design and installation services for the State of Michigan. Exact quantities to be purchased are unknown; however, the Contractor will be required to furnish all such materials and services as may be ordered during the CONTRACT period. Quantities specified, if any, are estimates based on prior purchases, and the State is not obligated to purchase in these or any other quantities. Orders for delivery will be issued directly to the Contractor by various State Agencies on the Purchase Order Contract Release Form.

Attached is a listing of State agencies and/or locations that may order from the Contract. The listing shall not limit participation of additional agencies/locations as the need may develop at the same prices, terms and conditions. Units of local government may also issue orders (see attached Non-State Agency Statement).

2.002 ISSUING OFFICE AND CONTRACT ADMINISTRATOR

This Contract is issued by the State of Michigan, Department of Management and Budget, Purchasing Operations, hereinafter known as Purchasing Operations, for all State agencies. Where actions are a combination of those of Purchasing Operations and the State agencies, the authority will be known as the State.

Purchasing Operations is the sole point of contact in the State with regard to all procurement and Contractual matters relating to the commodities and/or services described herein. Purchasing Operations is the only office authorized to negotiate, change, modify, amend, alter, clarify, etc., the specifications, terms, and conditions of the Contract. Purchasing Operations will remain the SOLE POINT OF CONTACT throughout the procurement process.

Contractor proceeds at its own risk if it takes negotiation, changes, modification, alterations, amendments, clarification, etc., of the specifications, terms, or conditions of the Contract from any individual or office other than Purchasing Operations and the listed Contract administrator

All communications covering this procurement must be addressed to Contract administrator indicated below:

Department of Management and Budget
Purchasing Operations
Laura Gyorkos
2nd Floor, Mason Building
P.O. Box 30026
Lansing, Michigan 48909
Phone: (517) 373-1455
E-Mail: GyorkosL@michigan.gov

2.003 NOTICE

Any notice given to a party under this Contract must be written and shall be deemed effective, if addressed to such party as addressed below upon (i) delivery, if hand delivered; (ii) receipt of a confirmed transmission by facsimile if a copy of the notice is sent by another means specified in this section; (iii) the third (3rd) Business Day after being sent by U.S. mail, postage pre-paid, return receipt requested; or (iv) the next Business Day after being sent by a nationally recognized overnight express courier with a reliable tracking system.

2.004 CONTRACT TERM

The term of this Contract will be for three (3) years and will commence with the issuance of a Contract. This will be approximately August 6, 2008 through August 5, 2011.

Option. The State reserves the right to exercise two (2) one-year options, at the sole option of the State. Contractor performance, quality of products, price, cost savings, and the Contractor's ability to deliver on time are some of the criteria that will be used as a basis for any decision by Purchasing Operations to exercise an option year.

Extension. At the sole option of the State, the Contract may also be extended. Contractor performance, quality of products, price, cost savings, and the Contractor's ability to deliver on time are some of the criteria that will be used as a basis for any decision by Purchasing Operations to exercise an option year.

Written notice will be provided to the Contractor within 45 days prior to expiration provided that the State gives the Contractor a preliminary written notice of its intent to extend at least 60 days before the Contract expires. The preliminary notice does not commit the State to an extension. If the State exercises this option, the extended Contract shall be considered to include this option clause.

2.005 GOVERNING LAW

The Contract shall in all respects be governed by, and construed in accordance with, the laws of the State of Michigan. By signing this agreement, vendor consents to personal jurisdiction in the state of Michigan. Any dispute arising herein shall be resolved in the State of Michigan.

2.006 APPLICABLE STATUTES

The following statutes, rules, and laws are applicable to the performance of this Contract; some statutes are reflected in the clauses of this Contract. This list is NOT exhaustive.

MI Uniform Commercial Code (MIUCC) MCL 440. (all sections unless otherwise altered by agreement)
MI OSHA MCL §§ 408.1001 – 408.1094
Freedom of Information Act (FIOA) MCL §§ 15.231, et seq.
Natural Resources and Environmental Protection Act MCL §§ 324.101, et seq.
MI Consumer Protection Act MCL §§ 445.901 – 445.922
Laws relating to wages, payments of wages, and fringe benefits on state projects MCL §§ 408.551 – 408.558, 408.471 – 408.490, 1965 PA 390.
Department of Civil Service Rules and Regulations
Elliot Larsen Civil Rights Act MCL §§ 37.2201, et seq.
Persons with disabilities Civil Rights Act MCL §§ 37.1101, et seq.
MCL §§ 423.321, et seq.
MCL § 18.1264 (law regarding debarment)
Davis-Bacon Act (DBA) 40 USCU §§ 276(a), et seq.
Contract Work Hours and Safety Standards Act (CWHSAA) 40 USCS § 327, et seq.
Business Opportunity Act for Persons with Disabilities MCL §§ 450.791 – 450.795

Rules and regulations of the Environmental Protection Agency
Internal Revenue Code
Rules and regulations of the Equal Employment Opportunity Commission (EEOC)
The Civil Rights Act of 1964, USCS Chapter 42
Title VII, 42 USCS §§ 2000e et seq.
The Americans with Disabilities Act (ADA), 42 USCS §§ 12101 et seq.
The Age Discrimination in Employment Act of 1967 (ADEA), 29 USCS §§ 621, 623 et seq.
The Old Workers Benefit and Protection Act of 1990 (OWBPA), 29 USCS §§ 626, et seq.
The Family Medical Leave Act of 1993 (FMLA), 29 USC §§ 651 et seq.
The Fair Labor Standards Act (FLSA), 29 USC §§ 201 et seq.
Pollution Prevention Act of 1990 (PPA) 42 U.S.C. §13106
Sherman Act, 15 U.S.C.S. § 1 et seq.
Robinson-Patman Act, 15 U.S.C.S. § 13 et. seq.
Clayton Act, 15 U.S.C.S. § 14 et seq.
Public Act 166 of 1965

2.007 RELATIONSHIP OF THE PARTIES

The relationship between the State and the Contractor is that of client and independent Contractor. No agent, employee, or servant of the Contractor or any of its subContractors shall be or shall be deemed to be an employee, agent, or servant of the State for any reason. The Contractor will be solely and entirely responsible for its acts and the acts of its agents, employees, servants and subContractors during the performance of this Contract.

2.008 HEADINGS

Captions and headings used in the Contract are for information and organization purposes. Captions and headings, including inaccurate references, do not, in any way, define or limit the requirements or terms and conditions of this Contract.

2.009 MERGER

This document constitutes the complete, final, and exclusive agreement between the parties. All other prior writings and negotiations are ineffective.

2.010 SEVERABILITY

Each provision of the Contract shall be deemed to be severable from all other provisions of the Contract and, if one or more of the provisions of the Contract shall be declared invalid, the remaining provisions of the Contract shall remain in full force and effect.

2.011 SURVIVORSHIP

Any provisions of the Contract that impose continuing obligations on the parties including, but not limited to the Contractor's indemnity and other obligations shall survive the expiration or cancellation of the Contract for any reason.

2.012 NO WAIVER OF DEFAULT

The failure of a party to insist upon strict adherence to any term of the Contract shall not be considered a waiver or deprive the party of the right thereafter to insist upon strict adherence to that term or any other term of the Contract.

2.013 PURCHASE ORDERS

Orders for delivery of commodities and/or services may be issued directly by the State departments through the issuance of a Purchase Order Form referencing this Contract (Blanket Purchase Order) agreement and the terms and conditions contained herein. Contractor is asked to reference the Purchase Order Number on all invoices for payment.

2.1 Vendor/Contractor Obligations

2.101 ACCOUNTING RECORDS

The Contractor and all subContractors shall maintain all pertinent financial and accounting records and evidence pertaining to the Contract in accordance with generally accepted principles of accounting and other procedures specified by the State of Michigan. Financial and accounting records shall be made available, upon request, to the State of Michigan, its designees, or the Michigan Auditor General at any time during the Contract period and any extension thereof, and for three years from expiration date and final payment on the Contract or extension thereof.

2.102 NOTIFICATION OF OWNERSHIP

The Contractor shall make the following notifications in writing:

a. When the Contractor becomes aware that a change in its ownership or officers has occurred, or is certain to occur, that could result in changes in the valuation of its capitalized assets in the accounting records, the Contractor shall notify Purchasing Operations within 30 days.

b. The Contractor shall also notify the Purchasing Operations within 30 days whenever changes to asset valuations or any other cost changes have occurred or are certain to occur as a result of a change in ownership or officers.

The Contractor shall:

a. Maintain current, accurate, and complete inventory records of assets and their costs;

b. Provide Purchasing Operations or designated representative ready access to the records upon request;

c. Ensure that all individual and grouped assets, their capitalized values, accumulated depreciation or amortization, and remaining useful lives are identified accurately before and after each of the Contractor's ownership or officer changes; and

d. Retain and continue to maintain depreciation and amortization schedules based on the asset records maintained before each Contractor ownership or officer change.

2.103 SOFTWARE COMPLIANCE

The vendor warrants that all software for which the vendor either sells or licenses to the State of Michigan and used by the State prior to, during or after the calendar year 2000, includes or shall include, at no added cost to the State, design and performance so the State shall not experience software abnormality and/or the generation of incorrect results from the software, due to date oriented processing, in the operation of the business of the State of Michigan.

The software design, to insure year 2000 compatibility, shall include, but is not limited to: data structures (databases, data files, etc.) that provide 4-digit date century; stored data that contain date century recognition, including, but not limited to, data stored in databases and hardware device internal system dates; calculations and program logic (e.g., sort algorithms, calendar generation, event recognition, and all processing actions that use or produce date values) that accommodates same century and multi-century formulas and date values; interfaces that supply data to and receive data from other systems or

organizations that prevent non-compliant dates and data from entering any State system; user interfaces (i.e., screens, reports, etc.) that accurately show 4 digit years; and assurance that the year 2000 shall be correctly treated as a leap year within all calculation and calendar logic.

2.104 RESERVED

2.105 RESERVED

2.106 PREVAILING WAGE

The rates of wages and fringe benefits to be paid each class of individuals employed by the Contractor, its subContractors, their subContractors, and all persons involved with the performance of this Contract in privity of Contract with the Contractor shall not be less than the wage rates and fringe benefits established by the Michigan Department of Labor and Economic Growth, Bureau of Safety and Regulation, Wage/Hour Division schedule of occupational classification and wage rates and fringe benefits for the local where the work is to be performed. The term Contractor shall include all general Contractors, prime Contractors, project managers, trade Contractors, and all of their Contractors or subContractors and persons in privity of Contract with them (see attached 2004 Prevailing Wage Rates for State Funded Projects).

The Contractor, its subContractors, their subContractors, and all persons involved with the performance of this Contract in privity of Contract with the Contractor shall keep posted on the work site, in a conspicuous place, a copy of all wage rates and fringe benefits as prescribed in the Contract. You must also post, in a conspicuous place; the address and telephone number of the Michigan Department of Labor and Economic Growth the office responsible for enforcement of the wage rates and fringe benefits. You shall keep an accurate record showing the name and occupation of the actual wage and benefits paid to each individual employed in connection with this Contract. This record shall be available to the State upon request for reasonable inspection.

If any trade is omitted from the list of wage rates and fringe benefits to be paid to each class of individuals by the Contractor, it is understood that the trades omitted shall also be paid not less than the wage rate and fringe benefits prevailing in the local where the work is to be performed.

Prevailing wage rates only apply to work being performed in State owned, controlled or leased buildings. The non-prevailing wage rate applies to all other work.

The prevailing wage classification is defined as laborer, unless otherwise specified.

2.107 PAYROLL AND BASIC RECORDS

Payrolls and basic records relating to the performance of this Contract shall be maintained by the Contractor during the course of the work and preserved for a period of 3 years thereafter for all laborers and mechanics working at the site of the work. Such records shall contain the name, address, and social security number of each such worker, his or her correct classification, hourly rates of wages paid (including rates of contributions or costs anticipated for bona fide fringe benefits or cash equivalents thereof of the types described in section 1(b)(2)(B) of the Davis-Bacon Act), daily and weekly number of hours worked, deductions made, and actual wages paid. Contractors employing apprentices or trainees under approved programs shall maintain written evidence of the registration of apprenticeship programs and certification of trainee programs, the registration of the apprentices and trainees, and the ratios and wage rates prescribed in the applicable programs.

The Contractor shall submit a copy of all payrolls to the Contract Administrator upon request. The payrolls submitted shall set out accurately and completely all of the information required to be maintained as indicated above.

The Prime Contractor is responsible for the submission of copies of payrolls by all subContractors upon request from the Contract Administrator

The Contractor or subContractor shall permit the Contract Administrator or representatives of the Contract Administrator or the State of Michigan to interview employees during working hours on the job.

If the Contractor or subContractor fails to submit required records or to make them available, the Contract Administrator may, after written notice to the Contractor, take such action as may be necessary to cause the suspension of any further payment. Furthermore, failure to submit the required records upon request or to make such records available may be grounds for debarment.

2.108 COMPETITION IN SUBCONTRACTING

The Contractor shall select subContractors (including suppliers) on a competitive basis to the maximum practical extent consistent with the objectives and requirements of the Contract.

2.109 CALL CENTER DISCLOSURE

Vendor and/or all subContractors involved in the performance of this Contract providing call or contact center services to the State of Michigan must disclose the location of its call or contact center services to inbound callers. Failure to disclose this information shall be a material breach of this agreement.

2.2 Contract Performance

2.201 TIME IS OF THE ESSENCE

Contractor/Vendor is on notice that time is of the essence in the performance of this Contract. Late performance will be considered a material breach of this Contract, giving the State a right to invoke all remedies available to it under this Contract.

2.202 CONTRACT PAYMENT SCHEDULE

All invoices should reflect actual work done. Specific details of invoices and payments will be agreed upon between the Contract Administrator and the Contractor after the proposed Contract Agreement has been signed and accepted by both the Contractor and the Director of Purchasing Operations, Department of Management and Budget. This activity will occur only upon the specific written direction from Purchasing Operations.

2.203 RESERVED

2.204 RESERVED

2.205 ELECTRONIC PAYMENT AVAILABILITY

Public Act 533 of 2004 requires that payments under this Contract be processed by electronic funds transfer (EFT). Contractor is required to register to receive payments by EFT at the Contract & Payment Express website (www.cpexpress.state.mi.us).

2.206 RESERVED

2.3 Contract Rights and Obligations

2.301 INCURRING COSTS

The State of Michigan is not liable for any cost incurred by the Contractor prior to signing of the Contract. The State fiscal year is October 1st through September 30th. The Contractor(s) should realize that payments in any given fiscal year are contingent upon enactment of legislative appropriations. Total liability of the State is limited to terms and conditions of the Contract.

2.302 CONTRACTOR RESPONSIBILITIES

The Contractor will be required to assume responsibility for all Contractual activities, whether or not that Contractor performs them. Further, the State will consider the Contractor to be the sole point of contact with regard to Contractual matters, including payment of any and all charges in this Contract. If any part of the work is to be subContracted, the Contract must include a list of subContractors, including firm name and address, contact person and a complete description of work to be subContracted. The State reserves the right to approve subContractors and to require the Contractor to replace subContractors found to be unacceptable. The Contractor is totally responsible for adherence by the subContractor to all provisions of the Contract. Any change in subContractors must be approved by the State, in writing, prior to such change.

2.303 ASSIGNMENT AND DELEGATION

The Contractor shall not have the right to assign this Contract, to assign its rights under this Contract, or delegate any of its duties or obligations under the Contract to any other party (whether by operation of law or otherwise), without the prior written consent of the State. Any purported assignment in violation of this Section shall be null and void. Further, the Contractor may not assign the right to receive money due under the Contract without the prior written consent of the Director of Purchasing Operations.

The Contractor shall not delegate any duties or obligations under the Contract to a subContractor other than a subContractor named and approved in the bid unless the Director of Purchasing Operations has given written consent to the delegation.

The contractor must obtain the approval of the Director of Purchasing Operations before using a place of performance that is different from the address that the contractor provided in their bid.

2.304 TAXES

Sales Tax: For purchases made directly by the State of Michigan, the State is exempt from State and Local Sales Tax. Prices shall not include such taxes. Exemption Certificates for State Sales Tax will be furnished upon request.

Federal Excise Tax: The State of Michigan may be exempt for Federal Excise Tax, or such taxes may be reimbursable, if articles purchased under this Contract are used for the State's exclusive use. Certificates exclusive use for the purposes of substantiating a tax-free, or tax-reimbursable sale will be sent to the Contractor upon request. If a sale is tax exempt or tax reimbursable under the Internal Revenue Code, prices shall not include the Federal Excise Tax.

The State's Tax Exempt Certification is available for vendor viewing upon request to the Contract Administrator.

2.305 INDEMNIFICATION

General Indemnification

To the fullest extent permitted by law, the Contractor shall indemnify, defend and hold harmless the State, its departments, divisions, agencies, sections, commissions, officers, employees and agents, from and against all losses, liabilities, penalties, fines, damages and claims (including taxes), and all related costs and expenses (including reasonable attorneys' fees and disbursements and costs of investigation, litigation, settlement, judgments, interest and penalties), arising from or in connection with any of the following:

1. Any claim, demand, action, citation or legal proceeding against the State, its employees and agents arising out of or resulting from (1) the product provided or (2) performance of the work, duties, responsibilities, actions or omissions of the Contractor or any of its subContractors under this Contract.

2. Any claim, demand, action, citation or legal proceeding against the State, its employees and agents arising out of or resulting from a breach by the Contractor of any representation or warranty made by the Contractor in the Contract;

3. Any claim, demand, action, citation or legal proceeding against the State, its employees and agents arising out of or related to occurrences that the Contractor is required to insure against as provided for in this Contract;

4. Any claim, demand, action, citation or legal proceeding against the State, its employees and agents arising out of or resulting from the death or bodily injury of any person, or the damage, loss or destruction of any real or tangible personal property, in connection with the performance of services by the Contractor, by any of its subContractors, by anyone directly or indirectly employed by any of them, or by anyone for whose acts any of them may be liable; provided, however, that this indemnification obligation shall not apply to the extent, if any, that such death, bodily injury or property damage is caused solely by the negligence or reckless or intentional wrongful conduct of the State;

5. Any claim, demand, action, citation or legal proceeding against the State, its employees and agents which results from an act or omission of the Contractor or any of its subContractors in its or their capacity as an employer of a person.

Patent/Copyright Infringement Indemnification

To the fullest extent permitted by law, the Contractor shall indemnify, defend and hold harmless the State, its employees and agents from and against all losses, liabilities, damages (including taxes), and all related costs and expenses (including reasonable attorneys' fees and disbursements and costs of investigation, litigation, settlement, judgments, interest and penalties) incurred in connection with any action or proceeding threatened or brought against the State to the extent that such action or proceeding is based on a claim that any piece of equipment, software, commodity or service supplied by the Contractor or its subContractors, or the operation of such equipment, software, commodity or service, or the use or reproduction of any documentation provided with such equipment, software, commodity or service infringes any United States or foreign patent, copyright, trade secret or other proprietary right of any person or entity, which right is enforceable under the laws of the United States. In addition, should the equipment, software, commodity, or service, or the operation thereof, become or in the Contractor's opinion be likely to become the subject of a claim of infringement, the Contractor shall at the Contractor's sole expense (i) procure for the State the right to continue using the equipment, software, commodity or service or, if such option is not reasonably available to the Contractor, (ii) replace or modify the same with equipment, software, commodity or service of equivalent function and performance so that it becomes non-infringing, or, if such option is not reasonably available to Contractor, (iii) accept its return by the State with appropriate credits to the State against the Contractor's charges and reimburse the State for any losses or costs incurred as a consequence of the State ceasing its use and returning it.

Code Indemnification

To the extent permitted by law, the Contractor shall indemnify, defend and hold harmless the State from any claim, loss, or expense arising from Contractor’s breach of the No Surreptitious Code Warranty.

Indemnification Obligation Not Limited

In any and all claims against the State of Michigan, or any of its agents or employees, by any employee of the Contractor or any of its subContractors, the indemnification obligation under the Contract shall not be limited in any way by the amount or type of damages, compensation or benefits payable by or for the Contractor or any of its subContractors under worker's disability compensation acts, disability benefits acts, or other employee benefits acts. This indemnification clause is intended to be comprehensive. Any overlap in sub clauses, or the fact that greater specificity is provided as to

some categories of risk, is not intended to limit the scope of indemnification under any other sub clause.

Continuation of Indemnification Obligation

The duty to indemnify will continue in full force and affect not withstanding the expiration or early termination of the Contract with respect to any claims based on facts or conditions, which occurred prior to termination.

Indemnification Procedures

The procedures set forth below shall apply to all indemnity obligations under this Contract.

1. After receipt by the State of notice of the action or proceeding involving a claim in respect of which it will seek indemnification, the State shall promptly notify Contractor of such claim in writing and take or assist Contractor in taking, as the case may be, any reasonable action to avoid the imposition of a default judgment against Contractor. No failure to so notify Contractor shall relieve Contractor of its indemnification obligations except to the extent that Contractor can demonstrate damages attributable to such failure. Within ten (10) days following receipt of written notice from the State relating to any claim, Contractor shall notify the State in writing whether Contractor agrees to assume control of the defense and settlement of that claim (a "Notice of Election"). After notifying Contractor of a claim and prior to the State receiving Contractor's Notice of Election, the State shall be entitled to defend against the claim, at Contractor's expense, and Contractor will be responsible for any reasonable costs incurred by the State in defending against the claim during such period.

2. If Contractor delivers a Notice of Election relating to any claim: (i) the State shall be entitled to participate in the defense of such claim and to employ counsel at its own expense to assist in the handling of such claim and to monitor and advise the State about the status and progress of the Defense; (ii) Contractor shall, at the request of the State, demonstrate to the reasonable satisfaction of the State, Contractor's financial ability to carry out its defense and indemnity obligations under this Contract; (iii) Contractor shall periodically advise the State about the status and progress of the defense and shall obtain the prior written approval of the State before entering into any settlement of such claim or ceasing to defend against such claim and (iv) to the extent that any principles of Michigan governmental or public law may be involved or challenged, the State shall have the right, at its own expense, to control the defense of that portion of such claim involving the principles of Michigan governmental or public law. Notwithstanding the foregoing, the State may retain control of the defense and settlement of a claim by written notice to Contractor given within ten (10) days after the State's receipt of Contractor' s information requested by the State pursuant to clause (ii) of this paragraph if the State determines that Contractor has failed to demonstrate to the reasonable satisfaction of the State Contractor's financial ability to carry out its defense and indemnity obligations under this Section. Any litigation activity on behalf of the State of Michigan, or any of its subdivisions pursuant to this Section, must be coordinated with the Department of Attorney General. In the event the insurer's attorney represents the State pursuant to this Section, the insurer's attorney may be required to be designated as a Special Assistant Attorney General by the Attorney General of the State of Michigan.

3. If Contractor does not deliver a Notice of Election relating to any claim of which it is notified by the State as provided above, the State shall have the right to defend the claim in such manner as it may deem appropriate, at the cost and expense of Contractor. If it is determined that the claim was one against which Contractor was required to indemnify the State, upon request of the State, Contractor shall promptly reimburse the State for all such reasonable costs and expenses.

2.306 LIMITATION OF LIABILITY

Except as set forth herein, neither the Contractor nor the State shall be liable to the other party for indirect or consequential damages, even if such party has been advised of the possibility of such damages. Such limitation as to indirect or consequential damages shall not apply to claims for infringement of United States patent, copyright, trademarks or trade secrets; to claims for personal injury or damage to property caused by the gross negligence or willful misconduct of the Contractor; to claims covered by other specific provisions of this Contract calling for liquidated damages; to Contractor's indemnification obligations (2.305); or to court costs or attorney's fees awarded by a court in addition to damages after litigation based on this Contract.

The State's liability for damages to the Contractor shall be limited to the value of the Contract.

2.307 CONTRACT DISTRIBUTION

Purchasing Operations shall retain the sole right of Contract distribution to all State agencies and local units of government unless other arrangements are authorized by Purchasing Operations.

2.308 FORM, FUNCTION, AND UTILITY

If the Contract is for use of more than one State agency and if the good or service provided under this Contract do not the meet the form, function, and utility required by a State agency, that agency may, subject to State purchasing policies, procure the good or service from another source.

2.309 ASSIGNMENT OF ANTITRUST CAUSE OF ACTION

For and in consideration of the opportunity to submit a quotation and other good and valuable consideration, the contractor hereby assigns, sells and transfers to the State of Michigan all rights, title and interest in and to all causes of action it may have under the antitrust laws of the United States or this State for price fixing, which causes of action have accrued prior to the date of payment and which relate solely to the particular goods, commodities, or services purchased or procured by this State pursuant to this transaction.

2.310 PURCHASING FROM OTHER STATE AGENCIES

State agencies are exempt from utilizing this Contract if they would instead prefer to purchase similar items from the Department of Corrections, Michigan State Industries (MSI), which provides valuable training opportunities for inmates at State correctional facilities.

2.311 TRANSITION ASSISTANCE

If this Contract is not renewed at the end of this term, or is canceled prior to its expiration, for any reason, the Contractor must provide for all reasonable transition assistance requested by the State, to allow for the expired or canceled portion of the Services to continue without interruption or adverse effect, and to facilitate the orderly transfer of such services to the State or its designees. Such transition assistance will be deemed by the parties to be governed by the terms and conditions of this Contract, (notwithstanding this expiration or cancellation) except for those Contract terms or conditions that do not reasonably apply to such transition assistance. The State shall pay the Contractor for any resources utilized in performing such transition assistance at the most current rates provided by the Contract for Contract performance.

2.312 RESERVED

2.313 RESERVED

2.314 WEBSITE INCORPORATION

The State of Michigan expressly states that it will not be bound by any content on the Contractor's website, even if the Contractor's documentation specifically referenced that content and attempts to incorporate it into any other communication, unless the State has actual knowledge of such content and has expressly agreed to be bound by it in a writing that has been manually signed by an authorized representation of the State.

2.4 Contract Review and Evaluation

2.401 RESERVED

2.402 PERFORMANCE REVIEWS

Purchasing Operations in conjunction with the various State agencies may review with the Contractor their performance under the Contract. Performance reviews shall be conducted quarterly, semi-annually or annually depending on Contractor's past performance with the State. Performance reviews shall include, but not limited to, quality of products/services being delivered and provided, timeliness of delivery, percentage of completion of orders, the amount of back orders, status of such orders, accuracy of billings, customer service, completion and submission of required paperwork, the number of substitutions and the reasons for substitutions, and other requirements of the Contract.

Upon a finding of poor performance, which has been documented by Purchasing Operations, the Contractor shall be given an opportunity to respond and take corrective action. If corrective action is not taken in a reasonable amount of time as determined by Purchasing Operations, the Contract may be canceled for default. Delivery by the Contractor of unsafe and/or adulterated or off-condition products to any State agency is considered a material breach of Contract subject to the cancellation provisions contained herein.

2.403 AUDIT OF CONTRACT COMPLIANCE/ RECORDS AND INSPECTIONS

a. Inspection of Work Performed. The State's authorized representatives shall at all reasonable times and with ten (10) days prior written request, have the right to enter Contractor's premises, or any other places, where the Services are being performed, and shall have access, upon reasonable request, to interim drafts of Deliverables or work-in-progress. Upon ten (10) Days prior written notice and during business hours, the State's representatives shall be allowed to inspect, monitor, or otherwise evaluate the work being performed and to the extent that such access will not interfere or jeopardize the safety or operation of the systems or facilities. Contractor must provide all reasonable facilities and assistance for the State's representatives, so long as no security, labor relations policies and propriety information policies are violated.

b. Examination of Records. No more than once per year, Contractor agrees that the State, including its duly authorized representatives, until the expiration of seven (7) years following the creation of the material (collectively, the "Audit Period"), shall, upon twenty (20) days prior written notice, have access to and the right to examine and copy any of Contractor's books, records, documents and papers pertinent to establishing Contractor's compliance with the terms and conditions of the Contract and with applicable laws and rules, including the State's procurement rules, regulations and procedures, and actual performance of the Contract for the purpose of conducting an audit, examination, excerpt and/or transcription but the State shall not have access to any information deemed confidential to Contractor to the extent such access would require such confidential information to become publicly available. This provision also applies to the books, records, accounts, documents and papers, in print or electronic form, of any parent, affiliated or subsidiary organization of Contractor, or any SubContractor of Contractor performing services in connection with the Contract.

c. Retention of Records. Contractor shall maintain at least until the end of the Audit Period all pertinent financial and accounting records (including time sheets and payroll records, and information pertaining to the Contract and to the Services, equipment, and commodities provided under the

Contract) pertaining to the Contract in accordance with generally accepted accounting principles and other procedures specified in this Section. Financial and accounting records shall be made available, upon request, to the State at any time during the Audit Period. If an audit, litigation, or other action involving Contractor's records is initiated before the end of the Audit Period, the records must be retained until all issues arising out of the audit, litigation, or other action are resolved or until the end of the Audit Period, whichever is later.

d. Audit Resolution. If necessary, the Contractor and the State shall meet to review each audit report promptly after issuance. The Contractor will respond to each audit report in writing within thirty (30) days from receipt of such report, unless a shorter response time is specified in such report. The Contractor and the State shall develop and agree upon an action plan to promptly address and resolve any deficiencies, concerns, and/or recommendations in such audit report.

1. Errors. If the audit demonstrates any errors in the statements provided to the State, then the amount in error shall be reflected as a credit or debit on the next invoice and in subsequent invoices until the amount is paid or refunded in full. However, a credit or debit may not be carried for more than four (4) quarterly statements. If a balance remains after four (4) quarterly statements, then the remaining amount will be due as a payment or refund within forty-five (45) days of the last quarterly statement that the balance appeared on or termination of the Contract, whichever is earlier.

2. In addition to other available remedies, the difference between the payment received and the correct payment amount is greater than ten (10%), then the Contractor shall pay all of the reasonable costs of the audit.

2.5 Quality and Warranties

2.501 PROHIBITED PRODUCTS

The State will not accept salvage, distressed, outdated or discontinued merchandise. Shipping of such merchandise to any State agency, as a result of an order placed against the Contract, shall be considered default by the Contractor of the terms and conditions of the Contract and may result in cancellation of the Contract by the State. The brand and product number offered for all items shall remain consistent for the term of the Contract, unless Purchasing Operations has approved a change.

2.502 QUALITY ASSURANCE

The State reserves the right to periodically test products, which have been received to verify compliance with specifications. If laboratory analysis shows that the product does not meet specifications or fails to perform satisfactorily at any time, the Contractor shall be responsible for:

a. All costs of testing and laboratory analysis.
b. Disposal and/or replacement of all products which fail to meet specifications.
c. All costs of repair and/or replacement of equipment deemed to have been damaged by substandard products as determined by the State.

2.503 INSPECTION

All goods are subject to inspection and testing. In the event goods are defective in material or workmanship, or otherwise fail to meet the requirements of the Contract, the State shall have the right to reject the goods or retain the goods and correct the defects. The Contractor shall pay the State for expenses incurred in correcting defects. Rejected goods will be held for 45 days after delivery. The Contractor must arrange for the return of said goods, including paying for handling, packing, and transportation costs. The State has the authority to dispose of the goods without further liability to the State in the event the Contractor fails to make arrangements within the specified time period.

2.504 GENERAL WARRANTIES (GOODS)

Warranty of Merchantability – Goods provided by vendor under this agreement shall be merchantable. All goods provided under this Contract shall be of good quality within the description given by the State, shall be fit for their ordinary purpose, shall be adequately contained and packaged within the description given by the State, shall conform to the agreed upon specifications, and shall conform to the affirmations of fact made by the vendor or on the container or label.

Warranty of Fitness for a Particular Purpose – When vendor has reason to know or knows any particular purpose for which the goods are required, and the State is relying on the vendor's skill or judgment to select or furnish suitable goods, there is a warranty that the goods are fit for such purpose.

Warranty of Title – Vendor shall, in providing goods to the State, convey good title in those goods, whose transfer is right and lawful. All goods provided by vendor shall be delivered free from any security interest, lien, or encumbrance of which the State, at the time of Contracting, has no knowledge. Goods provided by vendor, under this agreement, shall be delivered free of any rightful claim of any third person by of infringement or the like.

2.505 CONTRACTOR WARRANTIES

The Contract will contain customary representations and warranties by the Contractor, including, without limitation, the following:

a. The Contractor will perform all services in accordance with high professional standards in the industry;

b. The Contractor will use adequate numbers of qualified individuals with suitable training, education, experience and skill to perform the services;

c. The Contractor will use its best efforts to use efficiently any resources or services necessary to provide the services that are separately chargeable to the State;

d. The Contractor will use its best efforts to perform the services in the most cost effective manner consistent with the required level of quality and performance;

e. The Contractor will perform the services in a manner that does not infringe the proprietary rights of any third party;

f. The Contractor will perform the services in a manner that complies with all applicable laws and regulations;

g. The Contractor has duly authorized the execution, delivery and performance of the Contract;

h. The Contractor is capable in all respects of fulfilling and shall fulfill all of its obligations under this Contract.

i. The Contract appendices, attachments, and exhibits identify all equipment and software services necessary for the deliverable(s) to perform and operate in compliance with the Contract's requirements.

j. The Contractor is the lawful owner or licensee of any Deliverable licensed or sold to the state by Contractor or developed by Contractor under this Contract, and Contractor has all of the rights necessary to convey to the state the ownership rights or license use, as applicable, of any and all Deliverables.

k. If, under this Contract, Contractor procures any equipment, software or other Deliverable for the State (including equipment, software and other Deliverables manufactured, re-marketed or otherwise sold by Contractor under Contractor's name), then in addition to Contractor's other responsibilities with

respect to such items as set forth in this Contract, Contractor shall assign or otherwise transfer to the State or its designees, or afford the State the benefits of, any manufacturer's warranty for the Deliverable.

l. The Contract signatory has the power and authority, including any necessary corporate authorizations, necessary to enter this Contract, on behalf of Contractor.

m. The Contractor is qualified and registered to transact business in all locations where required.

n. Neither the Contractor nor any Affiliates, nor any employee of either, has, shall have, or shall acquire, any Contractual, financial, business, or other interest, direct or indirect, that would conflict in any manner or degree with Contractor's performance of its duties and responsibilities to the State under this Contract or otherwise create an appearance of impropriety with respect to the award or performance of this Agreement. Contractor shall notify the State within two (2) days of any such interest that may be incompatible with the interests of the State.

o. All financial statements, reports, and other information furnished by Contractor to the State as part of its response to the ITB or otherwise in connection with the award of this Contract fairly and accurately represent the business, properties, financial condition, and results of operations of Contractor as of the respective dates, or for the respective periods, covered by such financial statements, reports, other information. Since the respective dates or periods covered by such financial statements, reports, or other information, there have been no material adverse changes in the business, properties, financial condition, or results of operations of Contractor. All written information furnished to the State by or behalf of Contractor in connection with this Contract, including its bid, it true, accurate, and complete, and contains no untrue statement of material fact or omits any material fact necessary to make such information not misleading.

2.506 STAFF

The Contractor shall not remove or reassign, without the State's prior written approval any of the Key Personnel until such time as the Key Personnel have completed all of their planned and assigned responsibilities in connection with performance of the Contractor's obligations under this Contract. The Contractor agrees that the continuity of Key Personnel is critical and agrees to the continuity of Key Personnel. Removal of Key Personnel without the written consent of the State may be considered by the State to be a material breach of this Contract. The prohibition against removal or reassignment shall not apply where Key Personnel must be replaced for reasons beyond the reasonable control of the Contractor including but not limited to illness, disability, resignation or termination of the Key Personnel's employment.

The State shall have the right to approve the assignment and replacement by the Contractor of all Key Personnel assigned to the Contract. Before assigning an individual to any of the Key Personnel positions, the Contractor shall notify the State of the proposed assignment, introduce the individual to the appropriate State representatives, and provide the State with a resume and any other information about the individual reasonably requested by the State. The State reserves the right to interview the individual before granting approval.
The State also reserves the right to approve subContractors for this project and to require the Contractor to replace subContractors that are found to be unacceptable.

The Contractor shall provide and manage all resource services (i.e., programming, design, installation, project coordination, etc.) from its multiple authorized dealerships to best meet the State's needs on a given project. The Contractor's dealership services and capacities shall be utilized effectively, as needed, to meet the fluctuating volumes and locations of State projects,

2.507 RESERVED

2.508 RESERVED

2.509 RESERVED

2.6 Breach of Contract

2.601 BREACH DEFINED

Failure to comply with articles, sections, or subsections of this agreement, or making any false statement in this agreement will be considered a material breach of this agreement giving the state authority to invoke any and all remedies available to it under this agreement.

In addition to any remedies available in law and by the terms of this Contract, if the Contractor breaches Sections 2.508, 2.509, or 2.510, such a breach may be considered as a default in the performance of a material obligation of this Contract.

2.602 NOTICE AND THE RIGHT TO CURE

In the event of a curable breach by the Contractor, the State shall provide the Contractor written notice of the breach and a time period to cure said breach described in the notice. This section requiring notice and an opportunity to cure shall not be applicable in the event of successive or repeated breaches of the same nature or if the State determines in its sole discretion that the breach poses a serious and imminent threat to the health or safety of any person or the imminent loss, damage or destruction of any real or tangible personal property.

2.603 EXCUSABLE FAILURE

1. Neither party shall be liable for any default or delay in the performance of its obligations under the Contract if and to the extent such default or delay is caused, directly or indirectly, by: fire, flood, earthquake, elements of nature or acts of God; riots, civil disorders, rebellions or revolutions in any country; the failure of the other party to perform its material responsibilities under the Contract (either itself or through another Contractor); injunctions (provided the injunction was not issued as a result of any fault or negligence of the party seeking to have its default or delay excused); or any other cause beyond the reasonable control of such party; provided the non-performing party and its subContractors are without fault in causing such default or delay, and such default or delay could not have been prevented by reasonable precautions and cannot reasonably be circumvented by the non-performing party through the use of alternate sources, workaround plans or other means, including disaster recovery plans. In such event, the non-performing party will be excused from any further performance or observance of the obligation(s) so affected for as long as such circumstances prevail and such party continues to use its best efforts to recommence performance or observance whenever and to whatever extent possible without delay provided such party promptly notifies the other party in writing of the inception of the excusable failure occurrence, and also of its abatement or cessation.

2. If any of the above enumerated circumstances substantially prevent, hinder, or delay performance of the services necessary for the performance of the State's functions for more than 14 consecutive days, and the State determines that performance is not likely to be resumed within a period of time that is satisfactory to the State in its reasonable discretion, then at the State's option: (a) the State may procure the affected services from an alternate source, and the State shall not be liable for payments for the unperformed services under the Contract for so long as the delay in performance shall continue; (b) the State may cancel any portions of the Contract so affected and the charges payable hereunder shall be equitably adjusted to reflect those services canceled; or (c) the Contract will be canceled without liability of the State to the Contractor as of the date specified by the State in a written notice of cancellation to the Contractor. The Contractor will not have the right to any additional payments from the State as a result of any excusable failure occurrence or to payments for services not rendered as a result of the excusable failure condition. Defaults or delays in performance by the Contractor which are caused by acts or omissions of its subContractors will not relieve the Contractor of its obligations under the Contract except to the extent that a subContractor is itself subject to any excusable failure condition described above and the Contractor cannot reasonably circumvent the effect of the subContractor's default or delay in performance through the use of alternate sources, workaround plans or other means.

2.7 Remedies

2.701 CANCELLATION

The State may cancel this Contract without further liability or penalty to the State, its departments, divisions, agencies, offices, commissions, officers, agents, and employees for any of the following reasons:

1. Material Breach by the Contractor. In the event that the Contractor breaches any of its material duties or obligations under the Contract, which are either not capable of or subject to being cured, or are not cured within the time period specified in the written notice of breach provided by the State, or pose a serious and imminent threat to the health and safety of any person, or the imminent loss, damage or destruction of any real or tangible personal property, the State may, having provided written notice of cancellation to the Contractor, cancel this Contract in whole or in part, for cause, as of the date specified in the notice of cancellation.

   In the event that this Contract is cancelled for cause, in addition to any legal remedies otherwise available to the State by law or equity, the Contractor shall be responsible for all costs incurred by the State in canceling the Contract, including but not limited to, State administrative costs, attorneys fees and court costs, and any additional costs the State may incur to procure the services required by this Contract from other sources. All excess re-procurement costs and damages shall not be considered by the parties to be consequential, indirect or incidental, and shall not be excluded by any other terms otherwise included in the Contract.

   In the event the State chooses to partially cancel this Contract for cause charges payable under this Contract will be equitably adjusted to reflect those services that are cancelled.

   In the event this Contract is cancelled for cause pursuant to this section, and it is therefore determined, for any reason, that the Contractor was not in breach of Contract pursuant to the provisions of this section, that cancellation for cause shall be deemed to have been a cancellation for convenience, effective as of the same date, and the rights and obligations of the parties shall be limited to that otherwise provided in the Contract for a cancellation for convenience.

2. Cancellation For Convenience By the State. The State may cancel this Contract for its convenience, in whole or part, if the State determines that such a cancellation is in the State's best interest. Reasons for such cancellation shall be left to the sole discretion of the State and may include, but not limited to (a) the State no longer needs the services or products specified in the Contract, (b) relocation of office, program changes, changes in laws, rules, or regulations make implementation of the Contract services no longer practical or feasible, and (c) unacceptable prices for additional services requested by the State. The State may cancel the Contract for its convenience, in whole or in part, by giving the Contractor written notice 30 days prior to the date of cancellation. If the State chooses to cancel this Contract in part, the charges payable under this Contract shall be equitably adjusted to reflect those services that are cancelled.

3. Non-Appropriation. In the event that funds to enable the State to effect continued payment under this Contract are not appropriated or otherwise made available. The Contractor acknowledges that, if this Contract extends for several fiscal years, continuation of this Contract is subject to appropriation or availability of funds for this project. If funds are not appropriated or otherwise made available, the State shall have the right to cancel this Contract at the end of the last period for which funds have been appropriated or otherwise made available by giving written notice of cancellation to the Contractor. The State shall give the Contractor written notice of such non-appropriation or unavailability within 30 days after it receives notice of such non-appropriation or unavailability.

4. Criminal Conviction. In the event the Contractor, an officer of the Contractor, or an owner of a 25% or greater share of the Contractor, is convicted of a criminal offense incident to the application for or performance of a State, public or private Contract or subContract; or convicted of a criminal offense including but not limited to any of the following: embezzlement, theft, forgery, bribery, falsification or destruction of records, receiving stolen property, attempting to influence a public employee to breach the ethical conduct standards for State of Michigan employees; convicted under State or federal

antitrust statutes; or convicted of any other criminal offense which in the sole discretion of the State, reflects upon the Contractor's business integrity.

5. Approvals Rescinded. The State may terminate this Contract without further liability or penalty in the event any final administrative or judicial decision or adjudication disapproves a previously approved request for purchase of personal services pursuant to Constitution 1963, Article 11, section 5, and Civil Service Rule 7. Termination may be in whole or in part and may be immediate as of the date of the written notice to Contractor or may be effective as of the date stated in such written notice.

2.702 RIGHTS UPON CANCELLATION

Termination Assistance. If this Contract (or any Statement of Work issued under it) is terminated for any reason prior to completion, Contractor agrees to provide for up to six (6) months after the termination all reasonable termination assistance requested by the State to facilitate the orderly transfer of such Services to the State or its designees in a manner designed to minimize interruption and adverse effect. Such termination assistance will be deemed by the parties to be governed by the terms and conditions of this Contract (notwithstanding its termination) other than any terms or conditions that do not reasonably apply to such termination assistance. Such termination assistance shall be at no additional charge to the State if the termination is for Contractor's Default pursuant to Section 2.602; otherwise the State shall compensate Contractor for such termination assistance on a time and materials basis in accordance with the Amendment Labor Rates within this Contract agreement.

2.703 RESERVED

2.704 STOP WORK

1. The State may, at any time, by written stop work order to the Contractor, require that the Contractor stop all, or any part, of the work called for by this Contract for a period of up to 90 days after the stop work order is delivered to the Contractor, and for any further period to which the parties may agree. The stop work order shall be specifically identified as such and shall indicate that it is issued under this section. Upon receipt of the stop work order, the Contractor shall immediately comply with its terms and take all reasonable steps to minimize the incurrence of costs allocable to the work covered by the stop work order during the period of work stoppage. Within the period of the stop work order, the State shall either:

   a) Cancel the stop work order; or
   b) Cancel the work covered by the stop work order as provided in the cancellation section of this Contract.

2. If a stop work order issued under this section is canceled or the period of the stop work order or any extension thereof expires, the Contractor shall resume work. The State shall make an equitable adjustment in the delivery schedule, the Contract price, or both, and the Contract shall be modified, in writing, accordingly, if:

   a) The stop work order results in an increase in the time required for, or in the Contractor's costs properly allocable to the performance of any part of this Contract; and
   b) The Contractor asserts its right to an equitable adjustment within 30 days after the end of the period of work stoppage; provided that if the State decides the facts justify the action, the State may receive and act upon a proposal submitted at any time before final payment under this Contract.

3. If the stop work order is not canceled and the work covered by the stop work order is canceled for reasons other than material breach, the State shall allow reasonable costs resulting from the stop work order in arriving at the cancellation settlement.

4. If a stop work order is not canceled and the work covered by the stop work order is canceled for material breach, the State shall not allow, by equitable adjustment or otherwise, reasonable costs resulting from the stop work order.

An appropriate equitable adjustment may be made in any related Contract of the Contractor that provides for adjustment and is affected by any stop work order under this section. The State shall not be liable to the Contractor for loss of profits because of a stop work order issued under this section.

2.705 SUSPENSION OF WORK

The Contract Administrator may order the Contractor, in writing, to suspend, delay, or interrupt all or any part of the work of this Contract for the period of time that the Contract Administrator determines appropriate for the convenience of the State.

If the performance of all or any part of the work is, for an unreasonable period of time, suspended, delayed, or interrupted (1) by an act of the Contract Administrator in the administration of this Contract, or (2) by the Contract Administrator's failure to act within the time specified in this Contract (or within a reasonable time if not specified), an adjustment shall be made for any increase in the cost of performance of this Contract (excluding profit) necessarily caused by the unreasonable suspension, delay, or interruption, and the Contract modified in writing accordingly. However, no adjustment shall be made under this clause for any suspension, delay, or interruption to the extent that performance would have been so suspended, delayed, or interrupted by any other cause, including the fault or negligence of the Contractor, or for which an equitable adjustment is provided for or excluded under any other term or condition of this Contract.

A claim under this clause shall not be allowed:

1. For any costs incurred more than 20 days before the Contractor shall have notified the Contract Administrator in writing of the act or failure to act involved (but this requirement shall not apply as to a claim resulting from a suspension order); and
2.) Unless the claim, in an amount stated, is asserted in writing as soon as practicable after the termination of the suspension, delay, or interruption, but not later than the date of final payment under the Contract.

2.8 Changes, Modifications, and Amendments

2.801 APPROVALS

The Contract may not be modified, amended, extended, or augmented except by a writing executed by the parties hereto, and any breach or default by a party shall not be waived or released other than in writing signed by the other party.

2.802 TIME EXTENTIONS

Time extensions for Contract changes will depend upon the extent, if any, by which the changes cause delay in the completion of the various elements of performance as described in the statement of work. The change order granting the time extension may provide that the Contract completion date will be extended only for those specific elements related to the changed work and that the remaining Contract completion dates for all other portions of the work will not be altered. The change order also may provide an equitable readjustment of liquidated damages under the new completion schedule.

2.803 MODIFICATION

Purchasing Operations reserves the right to modify this Contract at any time during the Contract term. Such modification may include changing the locations to be serviced, additional locations to be serviced, method or manner of performance of the work, number of days service is to be performed, addition or deletion of tasks to be performed, addition or deletion of items, and/or any other modifications deemed necessary. Any changes in pricing proposed by the Contractor resulting from the proposed changes are subject to

acceptance by the State. Changes may be increases or decreases. IN THE EVENT PRICES ARE NOT ACCEPTABLE TO THE STATE, THE CONTRACT SHALL BE SUBJECT TO COMPETITIVE BIDDING BASED UPON THE NEW SPECIFICATION.

The State reserves the right to add an item(s) that is not described on the item listing and is available from the Contract vendor. The item(s) may be included on the Contract, only if prior written approval has been granted by Purchasing Operations.

2.804 AUDIT AND RECORDS UPON MODIFICATION

DEFINITION: Records includes books, documents, accounting procedures and practices, and other data, regardless of whether such items are in written form, electronic form, or in any other form

Contractor shall be required to submit cost or pricing data with the pricing of any modification of this Contract to the Contract Administrator in Purchasing Operations. Data may include accounting records, payroll records, employee time sheets, and other information the state deems necessary to perform a fair evaluation of the modification proposal. Contract Administrator or authorized representative of the state shall have the right to examine and audit all of the Contractor's records, including computations and projections, related to:

1. The proposal for modification;
2. The discussions conducted on the proposal, including those related to negotiation;
3. Pricing of the modification; or
4. Performance of the modification.

Contractor shall make available at its office at all reasonable times the materials described in the paragraphs above.

If this Contract is completely or partially terminated, the records relating to the work terminated shall be made available for 3 years after any resulting final termination settlement.

2.805 CHANGES

(a) The Contract Administrator may, at any time, without notice to the sureties, if any, by written order designated or indicated to be a change order, make changes in the work within the general scope of the Contract, including changes:

(1) In the specifications (including drawings and designs);
(2) In the method or manner of performance of the work;
(3) In the State-furnished facilities, equipment, materials, services, or site; or
(4) Directing acceleration in the performance of the work.

(b) Any other written or oral order (which, as used in this paragraph (b), includes direction, instruction, interpretation, or determination) from the Contract Administrator that causes a change shall be treated as a change order under this clause; Provided, that the Contractor gives the Contract Administrator written notice stating:

(1) The date, circumstances, and source of the order; and
(2) That the Contractor regards the order as a change order.

(c) Except as provided in this clause, no order, statement, or conduct of the Contract Administrator shall be treated as a change under this clause or entitle the Contractor to an equitable adjustment.

2.806 COMPLIANCE WITH CONTRACT ITEM LISTING

After establishment of the Contract, State of Michigan agencies will have the ability to order ONLY the items specifically included on the Contract item listings. The Contractor MUST NOT accept orders for items, which are not included on the Contract. It is the Contractor's responsibility to monitor orders in order to verify that only items included on the Contract are being ordered. Accepting orders for items not included on the Contract may result in cancellation.

If an agency has a need for an item that is not specifically listed on the Contract item listing, that agency MUST be referred to the buyer in Purchasing Operations. Purchasing Operations will research the need and feasibility of the item requested, and the item will be officially added to the Contract prior to state agencies having the ability to order them.

2.900 LIABILITY INSURANCE

A. Insurance

The Contractor is required to provide proof of the minimum levels of insurance coverage as indicated below. The purpose of this coverage shall be to protect the State from claims which may arise out of or result from the Contractor's performance of services under the terms of this Contract, whether such services are performed by the Contractor, or by any subContractor, or by anyone directly or indirectly employed by any of them, or by anyone for whose acts they may be liable.

The Contractor waives all rights against the State of Michigan, its departments, divisions, agencies, offices, commissions, officers, employees and agents for recovery of damages to the extent these damages are covered by the insurance policies the Contractor is required to maintain pursuant to this Contract.

All insurance coverage provided relative to this Contract/Purchase Order is PRIMARY and NON-CONTRIBUTING to any comparable liability insurance (including self-insurances) carried by the State.

The insurance shall be written for not less than any minimum coverage specified in this Contract or required by law, whichever is greater.

The insurers selected by Contractor shall have an A.M. Best rating of A or better, or as otherwise approved in writing by the State, or if such ratings are no longer available, with a comparable rating from a recognized insurance rating agency. Companies that have been approved to do business in the State shall issue all policies of insurance required in this Contract.

See www.michigan.gov/dleg

Where specific limits are shown, they are the minimum acceptable limits. If Contractor's policy contains higher limits, the State shall be entitled to coverage to the extent of such higher limits.

Before both parties sign the Contract or before the purchase order is issued by the State, the Contractor must furnish to the Director of Purchasing Operations, certificate(s) of insurance verifying insurance coverage ("Certificates"). The Certificate must be on the standard "accord" form or equivalent. **THE CONTRACT OR PURCHASE ORDER NO. MUST BE SHOWN ON THE CERTIFICATE OF INSURANCE TO ASSURE CORRECT FILING.** All Certificate(s) are to be prepared and submitted by the Insurance Provider. All Certificate(s) shall contain a provision indicating that coverage afforded under the policies WILL NOT BE CANCELLED, MATERIALLY CHANGED, OR NOT RENEWED without THIRTY (30) days prior written notice, except for ten (10) days for non-payment of premium, having been given to the Director of Purchasing Operations, Department of Management and Budget. The notice must include the Contract or Purchase Order number affected and be mailed to: Director, Purchasing Operations, Department of Management and

Budget, P.O. Box 30026, Lansing, Michigan 48909. Failure to provide evidence of coverage, may, at the State's sole option, result in this Contract's termination.

The Contractor is required to pay for and provide the type and amount of insurance checked **below**:

1. Commercial General Liability with the following minimum coverage:

   $2,000,000 General Aggregate Limit other than Products/Completed Operations
   $2,000,000 Products/Completed Operations Aggregate Limit
   $1,000,000 Personal & Advertising Injury Limit
   $1,000,000 Each Occurrence Limit
   $500,000 Fire Damage Limit (any one fire)

   The Contractor must list the State of Michigan, its departments, divisions, agencies, offices, commissions, officers, employees and agents as ADDITIONAL INSUREDS on the Commercial General Liability certificate. The Contractor also agrees to provide evidence that insurance policies contain a waiver of subrogation by the insurance company.

2. If a motor vehicle is used to provide services or products under this Contract, the Contractor must have vehicle liability insurance on any auto including owned, hired and non-owned vehicles used in Contractor's business for bodily injury and property damage as required by law.

   The Contractor must list the State of Michigan, its departments, divisions, agencies, offices, commissions, officers, employees and agents as ADDITIONAL INSUREDS on the vehicle liability certificate. The Contractor also agrees to provide evidence that insurance policies contain a waiver of subrogation by the insurance company.

3. Workers' compensation coverage must be provided in accordance with applicable laws governing the employees and employers work activities in the state of the Contractor's domicile. If a self-insurer provides the applicable coverage, proof must be provided of approved self-insured authority by the jurisdiction of domicile. For employees working outside of the state of qualification, Contractor must provide appropriate certificates of insurance proving mandated coverage levels for the jurisdictions where the employees' activities occur.

   Any certificates of insurance received must also provide a list of states where the coverage is applicable.

   The Contractor also agrees to provide evidence that insurance policies contain a waiver of subrogation by the insurance company. This provision shall not be applicable where prohibited or limited by the laws of the jurisdiction in which the work is to be performed.

4. Employers liability insurance with the following minimum limits:

   $100,000 each accident
   $100,000 each employee by disease
   $500,000 aggregate disease

5. Employee Fidelity, including Computer Crimes, insurance naming the State as a loss payee, providing coverage for direct loss to the State and any legal liability of the State arising out of or related to fraudulent or dishonest acts committed by the employees of Contractor or its SubContractors, acting alone or in collusion with others, in a minimum amount of two hundred fifty thousand dollars ($250,000.00) with a maximum deductible of fifty thousand dollars ($50,000.00).

6. Umbrella or Excess Liability Insurance in a minimum amount of two million dollars ($2,000,000.00), which shall apply, at a minimum, to the insurance required in Subsection 1 (Commercial General Liability) above.

7. Professional Liability (Errors and Omissions) Insurance with the following minimum coverage: two million dollars ($2,000,000.00) each occurrence and two million dollars ($2,000,000.00) annual aggregate.

8. Fire and Personal Property Insurance covering against any loss or damage to the office space used by Contractor for any reason under this Contract, and the equipment, software and other contents of such office space, including without limitation, those contents used by Contractor to provide the Services to the State, up to the replacement value thereof, where such office space and its contents are under the care, custody and control of Contractor. Such policy shall cover all risks of direct physical loss or damage, including without limitation, flood and earthquake coverage and coverage for computer hardware and software. The State shall be endorsed on the policy as a loss payee as its interests appear.

B. SubContractors

Except where the State has approved in writing a Contractor subContract with other insurance provisions, Contractor shall require all of its SubContractors under this Contract to purchase and maintain the insurance coverage as described in this Section for the Contractor in connection with the performance of work by those SubContractors. Alternatively, Contractor may include any SubContractors under Contractor's insurance on the coverage required in this Section. SubContractor(s) shall fully comply with the insurance coverage required in this Section. Failure of SubContractor(s) to comply with insurance requirements does not limit Contractor's liability or responsibility.

C. Certificates of Insurance and Other Requirements

Contractor shall furnish to the Office of Purchasing Operations certificate(s) of insurance verifying insurance coverage or providing satisfactory evidence of self-insurance as required in this Section (the "Certificates"). Before the Contract is signed, and not less than 20 days before the insurance expiration date every year thereafter, the Contractor shall provide evidence that the State and its agents, officers and employees are listed as additional insureds, but only to the extent of liabilities assumed by Contractor as set forth in Indemnification Section of this Contract, under each commercial general liability and commercial automobile liability policy. In the event the State approves the representation of the State by the insurer's attorney, the attorney may be required to be designated as a Special Assistant Attorney General by the Attorney General of the State of Michigan.

Contractor shall maintain all required insurance coverage throughout the term of the Contract and any extensions thereto and, in the case of claims-made Commercial General Liability policies, shall secure tail coverage for at least three (3) years following the expiration or termination for any reason of this Contract. The minimum limits of coverage specified above are not intended, and shall not be construed; to limit any liability or indemnity of Contractor under this Contract to any indemnified party or other persons. Contractor shall be responsible for all deductibles with regard to such insurance. If Contractor fails to pay any premium for required insurance as specified in this Contract, or if any insurer cancels or significantly reduces any required insurance as specified in this Contract without the State's written consent, at the State's election (but without any obligation to do so) after the State has given Contractor at least thirty (30) days written notice, the State may pay such premium or procure similar insurance coverage from another company or companies; and at the State's election, the State may deduct the entire cost (or part thereof) from any payment due Contractor, or Contractor shall pay the entire cost (or any part thereof) upon demand by the State.

2.901 EXTENDED PURCHASING TO LOCAL UNITS OF GOVERNMENT/INSTITUTIONS OF HIGHER LEARNING

Act Number 431 of the Public Acts of 1984 permits the State of Michigan, Department of Management and Budget, to provide purchasing services to any city, village, county, township, school district, intermediate school district, nonprofit hospital, institution of higher learning, or community or junior colleges. As a result of the enactment of this legislation, the Extended Purchasing Program has been developed. This program extends the use of State Contracts to program members. The governmental agency must enter into an agreement with the State of Michigan to become authorized to participate, thus ensuring that local units of government secure a greater return for the expenditure of public funds. It is the policy of Purchasing Operations, Department of Management and Budget, that the final approval to utilize any such Contract in this manner must come from the Contract vendor.

The contractor will supply merchandise at the established State of Michigan contract prices and terms to MiDEAL members. The contractor must submit invoices and pay the authorized MIDEAL member on a direct and individual basis according to contract terms.

IT IS MANDATORY THAT THIS CONTRACT IS MADE AVAILABLE TO ALL STATE OF MICHIGAN AGENCIES AND AUTHORIZED MIDEAL PURCHASING PROGRAM MEMBERS.

Please Visit Mi DEAL at www.michigan.gov/buymichiganfirst under MiDeal.

This contract was competitively bid in 2006. The bid solicitation was publicly advertised on the State of Michigan, DMB, Purchasing website. Two bidders participated, DBI and Smart Office Systems. Dual Award contracts are established for DBI and SOS.

2.902 LABOR RELATIONS

Pursuant to 1980 Public Act 278, as amended, MCL 423.231, et seq., the State shall not award a Contract or subcontract to an employer whose name appears in the current register of employers failing to correct an **unfair labor practice** compiled pursuant to Section 2 of the Act. A Contractor of the State, in relation to the Contract, shall not enter into a Contract with a subcontractor, manufacturer, or supplier whose name appears in this register. Pursuant to Section 4 of 1980 Public Act 278, MCL 423.324, the State may void any Contract if, subsequent to award of the Contract, the name of the Contractor as an employer, or the name of the subcontractor, manufacturer or supplier of the Contractor appears in the register.

The Contractor represents and warrants that the company does not appear in the current register of employers failing to correct an unfair labor practice.

2.903 WORKPLACE DISCRIMINATION

The Contractor represents and warrants that in performing services for the State pursuant to this Contract, the Contractor agrees not to discriminate against any employee or applicant for employment, with respect to their hire, tenure, terms, conditions or privileges of employment, or any matter directly or indirectly related to employment, because of race, color, religion, national origin, ancestry, age, sex, height, weight, marital status, physical or mental handicap or disability. The Contractor further agrees that every subcontract entered into for the performance of any Contract or purchase order resulting here from will contain a provision requiring non-discrimination in employment, as herein specified, binding upon each subcontractor. This covenant is required pursuant to the Elliot Larsen Civil Rights Act, 1976 Public Act 453, as amended, MCL 37.2201, et seq., and the Persons With Disabilities Civil Rights Act, 1976 Public Act 220, as amended, MCL 37.1101, et seq., and any breach thereof may be regarded as a material breach of the Contract or purchase order.

Vendor hereby represents that in performing this Contract it will not violate The Civil Rights Act of 1964, USCS Chapter 42, including, but not limited to, Title VII, 42 USCS §§ 2000e et seq.; the Americans with Disabilities Act (ADA), 42 USCS §§ 12101 et seq.; or The Age Discrimination in Employment Act of 1967 (ADEA), 29 USCS §§ 621, 623 et seq.; the Old Workers Benefit and Protection Act of 1990 (OWBPA), 29 USCS §§ 626 et seq.; the Family Medical Leave Act of 1993 (FMLA), 29 USC §§ 651 et seq.; or the Fair Labor Standards Act (FLSA), 29 USC §§ 201 et seq.

APPENDIX A
REFURBISHED OPEN SPACE OFFICE FURNITURE
PRODUCT SPECIFICATIONS

GENERAL REQUIREMENTS

All materials used in the manufacturing of **Refurbished Open Space Office Furniture** system to be considered for use by the State of Michigan shall be those which are best suited to produce a quality product. All products shall be free from defects, which affect the appearance, operation, and serviceability of the products. All products to be proposed shall be equal to those supplied to the general trade, and shall also be the same as those listed in the manufacturers' most current catalog, specifications, and other literature. All components shall be from the Original Equipment Manufacturer (OEM).

All products shall be designed and manufactured to withstand daily usage over an extended period of time with minimum maintenance and repair. All panels shall be sturdy and shall stand straight. All panels shall be level and shall have a consistent panel-to-panel connection, in order to assure safety and provide a stable workstation. All modular components shall lock onto panels for safety. All products shall be free from rough and sharp edges, and all corners shall be protected.

SPECIFIC REQUIREMENTS

Listed below are the specific requirements and individual features that shall be incorporated into each **Refurbished Open Space Office Furniture** system proposed to the State of Michigan. All components must attach to both raceway and non-raceway panels.

A. PANELS -- Panels shall be available in both fabric covered and hard surface. The frame shall be constructed in a way to provide maximum structural integrity. Panels shall be constructed solid with maximum rigidity, free from any potential for warping, twisting, sagging, etc. Panels shall have the capability of being arranged in a variety of configurations and shall have the ability to be altered and adjusted on-site to adapt to a changing work environment.

Types and Sizes -- Panels shall be available in acoustical, fabric covered, hard surface, and electrified versions. Panels shall be available in a variety of sizes (widths and heights).

Tackable panels and a regular panel/tack board combination are acceptable.

Fabric -- Each side of a panel shall be fabric covered and shall have a single piece of fabric covering the entire side of the panel. Stackable panels are also acceptable. The fabric shall be attached securely along the entire perimeter of the panel. Panel fabric shall be removable and replaceable in the field. The fabric used shall be a Grade A nylon, polyester, or nylon/polyester blend.

Panel Connection -- Panel connections shall be made quickly and easily without the use of special or complicated tools. Panel connections shall be rigid in order to prevent the panels from being accidentally dislodged or jarred out of their proper position. Panels shall allow for the connection of two, three, or four panels extending from a single pivot point, at various angles. Panels shall be non-progressive, in that a particular panel can be removed without having to dismantle any adjacent panels.

Attachability of Components -- Panels shall allow for the hanging of work surfaces, and storage components at various incremental heights. Panels shall structurally support these types of components, utilizing a locking system that assures the components cannot be accidentally dislodged.

Acoustics -- Panels shall be acoustic.

Durability -- Contractor's basic line shall include reinforced-core panels that can withstand daily wear and tear including objects leaning against panel surface.

Levels -- Panels shall come equipped with adjustable leveling glides to compensate for uneven floors.

Raceways -- All powered panels shall have a base raceway capable of accepting power cables, communications lines, and terminal cables. All base raceways shall come equipped with a minimum of one or two knockout plates (depending on the size of the panel), in order to accept duplex power receptacles. Knockout plates shall be securely mounted to the base raceway when in-use and when not in-use.

Electrical -- Electrical cables shall be available in eight wire configuration. All connectors shall be color-coded and shall attach to each other and to duplex receptacles with a locking device to prevent the connections from being accidentally disconnected. Duplex receptacles shall be available to attach to the base raceway, and shall have the ability to be installed in the field.

Ceiling to Floor Options -- The State is interested in the availability of panels or accessories that allow for Ceiling to Floor configurations.

B. WORKSURFACES -- All work surfaces shall be height adjustable or removable without structurally affecting adjacent work surfaces. All supporting hardware and cantilevers required shall be supplied with each work surface. All cantilevers shall have a locking mechanism to prevent accidental dislodging. The underside of work surfaces shall have the ability to accept various types of components. Adjustable height work surfaces (without disconnecting from panel) shall also be available.

Types and Sizes -- Work surfaces shall be available in a variety of shapes including rectangular, corner, and counter tops. Factory installed grommets shall be available. Work surfaces shall be available in a variety of sizes (lengths and widths).

Laminate -- Work surfaces shall have a finished, high pressure, plastic laminate top permanently bonded to a particleboard core. Edges shall be available in a variety of finishes. The bottom surface shall also be finished with laminate. Laminates shall be available in a variety of colors and patterns including wood grain.

C. LOCKS AND KEYING -- All pedestal drawers, overhead flipper door cabinets, and lateral files shall be available with locks. Removable lock cores shall be provided when locks are ordered on a particular component. The lock core and key MUST be included with the actual item ordered when installation is not included on the order. Bulk packaging of lock cores and keys is only acceptable if specifically requested or when the order includes installation. All locks within a particular workstation shall have the ability of being keyed alike.

Refurbished Open Space Office Furniture Specifications
Page 3

D. DRAWER PEDESTALS -- All drawer units shall be a full steel construction and shall be interchangeable, having the capability of being located anywhere under any work surface of 20" depth or more. Pedestals shall have various drawer sizes available. All drawers shall be mounted on glides meeting all industry standard requirements referenced in Section III of this specification. Pedestals shall be available in surface mounted, freestanding, and mobile.

E. OVERHEAD SHELVES AND CABINETS -- Overhead shelves and cabinets shall be modular and utilize two end panels. Shelves and cabinets shall attach to panels in increment slots and shall utilize a locking system that assures the components cannot be accidentally dislodged. All shelves and cabinets shall be capable of accepting task lights, organizers, etc. It is acceptable for shelves and flipper door storage cabinets to be two separate and independent items. It is also acceptable for shelves to have the ability of being converted into a flipper door storage cabinet in the field by purchasing the door and top. Flipper doors shall be available in both fabric covered and hard surface options. Flipper doors shall run smoothly on full extension glides, and shall operate friction-free without binding or racking when accessing from one corner. Shelves and cabinets shall be available in a variety of sizes (widths and heights). The State is also interested in the availability of an ADA approved unit as well.

F. TASK LIGHTS -- Task lights shall be available to attach to the underside of shelves cabinets and counter tops. These lights shall attach to shelves and cabinets utilizing a solid, structurally sound device that will prevent the light from being accidentally dislodged. However, the mounting devices should allow for easy relocation. All lights shall provide glare-free lighting and shall have a heavy duty, factory installed electrical cord with a grounded plug. All task lights shall come standard with a low-mercury content bulb, lens, and a cord (minimum 6 feet). Task lights shall be available in a variety of sizes (widths).

G. KEYBOARD TRAYS -- An easily adjustable keyboard tray shall also be available as a standard product offering. Keyboard trays shall mount under work surfaces and shall come with a template in order to make attachment easier. Keyboard trays shall be fully adjustable and articulating (tilt adjustment, height adjustment, swivel, position locks, etc.), and shall be available with a wrist rest. An attachable mouse tray or separate mouse tray shall also be available. The slide shall allow for 360 degree rotation of tray and smooth storage of the tray and arm under the work surface. Split corner worksurfaces can be used in place of a keyboard tray.

H. DOORS -- Panel mounted doors shall also be available as a standard product offering. A lever handle shall come standard with all doors. Doors shall be available with locks. The minimum width of the door must meet all aspects of the ADA as it relates to minimum door width requirements.

I. PAPER MANAGEMENT -- Various paper management products shall be available to allow for horizontal, vertical, and diagonal storage. These products shall have the ability to be attached to panels, storage components, work surfaces, or be free-standing.

J. TACKBOARDS/MARKERBOARDS -- Tack boards and marker boards shall be available in a variety of sizes (coinciding with various panel sizes available) and shall attach to panels in incremental slots.

K. COAT HOOKS -- Coat hooks shall also be available.

L. PAINT -- All painted products shall have a baked enamel, powder coat, or equivalent meeting all industry standard requirements referenced in Section III of this specification.

M. ERGONOMICS - As the State of Michigan moves towards an ergonomic environment, the state shall have access to a manufacturer's various ergonomic items. This includes some of the products that are mentioned in other areas of this specification, such as keyboard trays, standard corner and split-corner work surfaces, adjustable height work surfaces (without having to disconnect the work surface from the panel), wrist rests, etc., as well as any other developments that become available throughout the Contract period.

N. PRODUCT IDENTIFICATION
All components shall be properly labeled with the re-furbishers company name in addition to the original manufacturer name.

INDUSTRY STANDARD REQUIREMENTS

Products offered MUST meet all specifications and current and applicable industry standards including the following:

- American National Standards Institute and Business Institutional Furniture Manufacturer's Association (ANSI/BIFMA)
- American Society For Testing and Materials (ASTM)
- Electrostatic Discharge Association (ESD)
- National Fire Protection Association (NFPA)
- Underwriter Laboratories Inc. (UL)

If portions of the referenced standards conflict with the State of Michigan specifications, the State of Michigan specifications prevail and take precedence. All contractors shall submit documented proof (certified in-house or independent laboratories) verifying that the products offered meet all industry standards referenced in these specifications. The State of Michigan may also require that the contractor have the proposed products tested against these standards by an independent laboratory anytime during the Contract period.

Refurbished Open Space Office Furniture Specifications
Page 5

A. **Flammability** -- Fabric covered panels shall have a maximum flame spread rating of 25 and a maximum smoke development rating of 450, and shall have a Class A fire rating when tested to **ASTM E 84** with a revision date of 1989 or newer.

B. **Acoustics** -- Acoustical panels shall be in accordance with **ASTM C 423-02** with a minimum NRC value of 0.50 and ANSI/BIFMA X5.6."

C. **Components** -- Components shall meet all aspects of the **ANSI/BIFMA X5.6**.

D. **Panels** -- Panels shall meet all aspects of the **ANSI/BIFMA X5.6-1993** standard.

E. **Electrical** -- Electrical components, raceways, duplex receptacles, task lights, etc. shall be **UL listed** and labeled, in accordance with **UL 1286-99.**

F. **Metal/Paint** -- Metal (including hard surface panels) shall be tested in accordance with current **ASTM, Class 1**.

REFURBISHED OPEN SPACE OFFICE FURNITURE
DESIGN SERVICES SPECIFICATIONS

GENERAL REQUIREMENTS

Refurbished Open Space Office Furniture DESIGN SERVICES shall be performed consistent with all construction, fire, MIOSHA, and related codes, including the Americans with Disabilities Act and the Michigan Barrier Free Design Code. DESIGN SERVICES shall also be performed with ergonomic concerns being considered. Organizations that will perform DESIGN SERVICES (hereinafter referred to as Design Firms) must be authorized by the manufacturer to design the particular Refurbished Open Space Office Furniture. Designs generally will consist of specifying the Refurbished Open Space Office Furniture required for the project to be ordered from the Contract. The Design Firm may also be required to identify in generic terms other free-standing furniture required for a project, such as file cabinets, tables, chairs, and floor to ceiling partitions, etc. All design must be completed utilizing an Auto CAD computer aided planning system. The state is willing to accept the standard system the designer is using but must provide training to state personnel at no additional charge. It is mandatory that Design Firms provide CAD drawings in print and disk.

The Design Firm shall adhere to all State of Michigan policies and work rules when working at a state location. This includes facility regulations, such as elevator capacity, dock regulations, floor load capacity, etc. Parking and delivery expenses will be the responsibility of the design firm. Delivery lane closures and signage, if required, will be the responsibility of the design firm.

The Design Firm is expected to complete the design phase of a project in a time frame consistent with industry standards. It is expected that the Design Firm will assign the appropriate skill type and number of designers required for a particular project, to ensure timely delivery of all aspects of DESIGN SERVICES.

The State reserves the right to utilize in house design services performed by State employees.

SPECIFIC REQUIREMENTS

Listed below are the specific requirements for DESIGN SERVICES of Refurbished Open Space Office Furniture.

A. DESIGNER QUALIFICATIONS -- All Design Firms must be authorized by the manufacturer to design the particular Refurbished Open Space Office Furniture and must be National Council for Interior Design Qualification (NCIDQ) certified or possess a minimum of five (5) years experience in interior office design.

Individual designers at the authorized Design Firms must have sufficient knowledge and skills to assure quality work. A project's lead designer must have a minimum of five (5) years experience in the design of Refurbished Open Space Office Furniture. All individuals performing design services shall be extremely organized in completing each step required in this specification for a particular project. Additionally, all individuals must have substantial knowledge of the product to be used, ability to communicate properly with others both verbally and in writing, ability to maintain records and prepare reports relative to the work, ability to understand and carry out detailed technical instructions, and knowledge of the Auto CAD planning system to efficiently design the space.

B. BUILDING MEASUREMENTS -- The ordering agency is responsible for providing an accurate drawing of the area to be designed. The Design Firm is required to field verify all measurements within the area to be designed relative to the Refurbished Open Space Office Furniture.

C. PROJECT MANAGEMENT -- Each project will be assigned a project manager by the using agency. The agency project manager shall approve each step of the design process prior to progression of the project to the installation phase.

D. PRE-DESIGN REVIEW MEETING -- The agency project manager will schedule a **pre-design review meeting** with the Design Firm to discuss general agency design requirements. The Design Firm is to identify a design coordinator for the project. This person will be the contact person for the agency project manager. The agency project manager will provide the design coordinator with an inventory of any special equipment specifications and equipment to be moved, and will also discuss space utilization and the number and general types of workstations to be designed. Also discussed will be any other information to be considered in the design process, such as special considerations for public contact, locations of any special groups or large areas, security areas, handicap employee offices, the particular agencies space standards, and also a list of the various products covered under the Refurbished Open Space Office Furniture Contract and the products covered under any other state Contracts (such as file cabinets, tables, chairs, floor to ceiling partitions, etc.). The Design Firm is responsible for working with the agency project manager to identify specific requirements such as elevator capacity, loading dock regulations, etc., for the facility in which the work is being performed.

For projects that will include the re-utilization of some existing furniture, the Design Firm is required to do an inventory of all existing furniture as part of this step.

E. SCHEMATIC DESIGN BLOCK PLAN -- The Design Firm will then prepare a **schematic design block plan** showing the general functional relationships between the use of space and the design solutions. This plan, using functional adjacencies, is to show the location and sizes of the workstations, ceiling high offices, conference rooms, and file areas. This plan shall indicate the names/designations assigned to each individual workstation as requested. This plan shall be to 1/8" or 1/4" scale and is due after the **pre-design review meeting**. The agency project manager shall approve, in writing, the plan prior to proceeding.

F. PRELIMINARY DESIGN PLAN -- The Design Firm will then prepare a **preliminary design plan** showing in detail the position of all Refurbished Open Space Office Furniture required from the Contract, as well as specifying in generic terms other Refurbished free-standing furniture required such as file cabinets, tables, chairs, and floor to ceiling partitions, which will be purchased from other State of Michigan Contracts. This plan shall be to 1/8" or 1/4" scale and is after approval of the **schematic design block plan**.

After development of the **preliminary design plan**, the agency project manager is allowed to make one to four (1 to 4) sets of changes, based on program changes, etc., prior to finalization of the **preliminary design plan**. The agency project manager shall approve, in writing, the final plan prior to proceeding.

G. INSTALLATION DESIGN PLAN -- The Design Firm will then prepare an **installation design plan**, showing in detail all Refurbished Open Space Office Furniture required for the project, wall heights, colors, types of panels (solid, glass, acoustical), electrical outlets, telephone outlets, word processing/computer outlets, as well as, in generic terms, other Refurbished free-standing furniture required such as file cabinets, tables, chairs, and floor to ceiling partitions, which will be purchased from other State of Michigan Contracts.

The **installation design plan** shall be to 1/4" scale and is due after the approval of the **preliminary design plan**. No changes in the approved **installation design plan** will be allowed prior to occupancy except for safety code regulations authorized by the agency project manager.

H. ITEMIZED PARTS LIST (bill of materials) -- The Design Firm will then provide the agency project manager with an **itemized parts list (bill of materials)** specifying in detail all Refurbished Open Space Office Furniture required for the project that will be ordered from the Contract, including product numbers, quantities, colors, etc. A separate list shall also be provided to the agency project manager specifying in generic terms other Refurbished free-standing furniture required for the project (including sizes and quantities), such as file cabinets, tables, chairs, and floor to ceiling partitions, which will be purchased from other State of Michigan Contracts.

For projects that will include the re-utilization of some existing furniture and an inventory of the existing furniture has been done, the Design Firm shall provide the agency project manager with a list of all existing furniture to be re-utilized in the project. This list shall be in addition to the **itemized parts list (bill of materials)** of Refurbished furniture required for the project and the generic list of Refurbished free-standing furniture required for the project and covered under other Contracts, both described above.

I. PROJECT COST -- When a particular project will consist of all Refurbished furniture to be ordered from the Contract (no re-utilization of existing furniture), the charge for DESIGN SERVICES shall be established by taking the appropriate percentage (%) multiplied by the total net value of the **itemized parts list (bill of materials)**, which specifies ALL Open Space Office Furniture required for the project. The appropriate percentage (%) to be charged for DESIGN SERVICES shall be taken from the Contracts DESIGN SERVICES INFORMATION SHEET, based on the order level, delivery option and region. Therefore, the charge for DESIGN SERVICES for this type of project will not be established until after the **itemized parts list (bill of materials)** is generated.

When a particular project will consist of a combination of some Refurbished furniture to be ordered from the Contract and the re-utilization of some existing furniture, or when only the re-design of existing workstations is needed and no Refurbished furniture will be ordered, the charge for DESIGN SERVICES shall be established by taking the dollar amount per hour from the Contract's DESIGN SERVICES INFORMATION SHEET multiplied by the total hours required to design the project. The Design Firm shall provide a detailed estimate of the hours that will be required for each step of the project within five (5) calendar days after the **pre-design review meeting**. Therefore, the estimated charge for DESIGN SERVICES for this type of project will be established within five (5) calendar days after the **pre-design review meeting**. Any changes from the number of hours originally quoted must be approved by the agency project manager.

Please note that the dollar amount per hour on the Contract's DESIGN SERVICES INFORMATION SHEET will also apply to projects requiring ALL Refurbished Open Space Office Furniture to be ordered from the Contract when the initial DESIGN SERVICES required for the project have been completed in compliance with these specifications. This figure will kick-in when the agency requires additional DESIGN SERVICES (due to further changes, a requirement to meet with each individual in the office, etc.), above and beyond what is required by these specifications. This includes any "tune-up" design required after installation is completed, due to minor revisions requested by the agency. All "tune-up" design plans shall be to 1/4" scale and are due within five (5) calendar days after notification.

When other free-standing furniture (tables, chairs, files, etc.) is part of the project, and that furniture is already in the agency's possession, the agency will be required to provide the designer with all necessary information, such as the total quantity of units, the size of each unit, etc. The designer will be required to incorporate the space needed for those items into all plans, at no additional cost. However, if the items are not already in the agency's possession, and the designer will be required to identify the quantity of each item to be purchased, the various sizes, etc., and then must incorporate the space needed for those items into all plans, the dollar amount per hour quoted for design may be charged for this service. The designer shall provide a list of these items required to the agency and the agency will be responsible for issuing the purchase order. The designer will also be responsible for coordinating the delivery of the tables, chairs, files, etc. ordered from other Contracts as a part of this service. Please note that for projects requiring the designer to identify, list, and coordinate the delivery of chairs, tables, files, etc. ordered from other Contracts, the number of hours required to perform this service should be listed as a separate line item, above and beyond the percentage or number of hours charged for the design of the Refurbished Open Space Office Furniture ordered.

There are no additional charges allowed for driving time, mileage, and other expenses if the project is located within the region in which the nearest Design Firm is located. A Design Firm's region is defined as a **50-mile radius** surrounding their location. All costs associated with these functions shall be factored into the percentages (%) and dollar amounts quoted on the attached DESIGN SERVICES INFORMATION SHEET. When the dollar amount per hour is utilized for a project and the project is located outside the region in which the **nearest** Design Firm is located, the total travel time must be specified as a separate line item and included in the total number of hours quoted for a particular project. The total travel time is then multiplied by the dollar amount per hour.

J. **AVAILABILITY DURING INSTALLATION** **--** The design coordinator shall be available to answer questions and provide consultation, including installation inspections, if required in order to verify that the installation of the Refurbished Open Space Office Furniture is being installed in accordance with the approved design.

K. **DESIGN SERVICES APPROVAL** **--** Each step of the project must be approved, in writing, by the agency project manager prior to proceeding to the next step. All plans are to be submitted in accordance with the established time frames. All plans shall be submitted in compliance with State of Michigan space standards using accepted drafting standards. The State of Michigan reserves the right to require all plans to be submitted in multiples of three. The State of Michigan also reserves the right to require all plans for a particular project to be submitted in an electronic format including CD format and e-mail. When requested, all plans and diskettes shall be submitted in a format that is compatible with the Auto CAD computer aided planning system

in an acceptable electronic format including CD format and e-mail, which shall become the property of the State of Michigan.

L. **PUNCH LIST --** After completion of the installation for the project, a **punch list** shall be generated consisting of all items needed to complete the project. **Punch list** items include damaged items that need to be replaced, items that were ordered incorrectly and need to be replaced, items that were inadvertently not ordered, missing items, etc. These items shall be provided at no additional cost. The design coordinator or installer can perform this step.

M. **SMALL PROJECTS --** The actual time required to complete the design will be multiplied by the dollar amount per hour to determine the cost for designing the project, including transportation time. **The Contractor is required to perform all requests for DESIGN SERVICES, regardless of the project size. For small projects, the maximum response time shall be 10 (ten) workdays.**

N. **COMMUNICATION WITH AGENCY --** The following is an outline of the various tasks that will be required throughout a project. Please note that an effort should always be made to perform these tasks in a face-to-face setting. However, when a sizeable distance exists between the Design Firm and the agency project manager, it is acceptable to accomplish some of these tasks through the use of standard mailings, overnight mailings, faxing, etc., as long as it is acceptable to the agency project manager and is still performed within the time frames indicated thought out this specification.

Standard Tasks

Agency Programming
Pre-Design Review Meeting
Schematic Design Block Plan
Preliminary Design Plan
Installation Design Plan
Itemized Parts Lists (2 or 3)
Project Cost
Punch List
"Tune-Up" Design

O. **"BENCHMARK" --** A "benchmark" will be established based on the contractor's proposal, as described in the DESIGN SERVICES statement in the attached Terms and Conditions, to be used for determining the amount of time required to design a particular project. An approximate time required per workstation for DESIGN SERVICES will therefore be established and included in the Contract. Deviations from the "benchmark" must be documented and approved by the agency. Purchasing Operations reserves the right to audit the number of hours quoted for a particular project, and compare it with the "benchmark" included in the Contract. If it is determined that the number of hours quoted for a project is excessive and not in line with the "benchmark", Purchasing Operations reserves the right to calculate the number of hours for a project utilizing the "benchmark", and require that the charge for DESIGN SERVICES be based on the number of hours generated by Purchasing Operations.

REFURBISHED OPEN SPACE OFFICE FURNITURE INSTALLATION SPECIFICATIONS

GENERAL REQUIREMENTS

Refurbished Open Space Office Furniture INSTALLATION shall be performed consistent with all construction, fire, MIOSHA, and related codes, including the Americans with Disabilities Act and the Michigan Barrier Free Design Code. Organizations that will perform INSTALLATION (hereinafter referred to as Installation Firms) must be authorized by the manufacturer to install the particular Refurbished Open Space Office Furniture. INSTALLATION for this Contract will consist of either installing all Refurbished Open Space Office Furniture purchased from the Contract when all Refurbished furniture is required for the project, or installing Refurbished Open Space Office Furniture purchased from the Contract for the project along with some existing furniture. INSTALLATION must be completed in accordance with the **installation design plan** provided.

The Installation Firm shall adhere to all State of Michigan policies and work rules when working at a state location. This includes facility regulations, such as elevator capacity, dock regulations, floor load capacity, etc. Travel, lodging, meals, delivery and parking expenses will be the responsibility of the Installation Firm, at no additional cost to the state. It is mandatory that Design Firms provide CAD drawings in print and disk.

The Installation Firm shall pay employees prevailing wage on projects associated with this Contract. Please refer to "Prevailing Wage" clause within this document. Premium hours shall be paid only if requested and approved by the State.

The installation shall be completed as agreed upon with the project manager. It is expected that the Installation Firm will assign the appropriate skill type and number of installers required for a particular project, to ensure timely delivery of all aspects of INSTALLATION.

The Installation Firm is responsible for all equipment and tools necessary to complete the job. The Installation Firm is responsible for any damage to state owned or leased property.

When in occupied facilities, the INSTALLATION is to be completed with a minimum of disruption to the work place. Safety of those in and around the work site is to be continuously assured via appropriate work methods. The site is to be kept as clean as possible during the INSTALLATION period and cleaned of all material at the end.

The State reserves the right to utilize in house installation services performed by State employees.

SPECIFIC REQUIREMENTS

Listed below are the specific requirements for the INSTALLATION of Refurbished Open Space Office Furniture.

A. INSTALLER QUALIFICATIONS -- All Installation Firms must be authorized by the manufacturer to install the particular Refurbished Open Space Office Furniture and must posses a minimum of five (5) years of experience in interior office INSTALLATION. Installation Firms must also be knowledgeable of all applicable fire codes, N.F.P.A. Life Safety Code, Barrier Free Design Code, the design requirements of the Americans with Disabilities Act, and the application of each as an integral part of design.

Installation Specifications
Page 2

Individual installers at the authorized Installation Firms must have sufficient knowledge and skills to assure quality work. Installers must have a minimum of one (1) year experience in the installation of Refurbished Open Space Office Furniture. "Apprentice" type employees may be assigned to a project at a ratio not to exceed one per five. Unskilled employees may be utilized for materials handling.

All individual installers must have the ability to follow drawings, plans, blueprints, specifications, and instructions, move existing furniture, equipment, and other materials, construct furniture according to drawings, and communicate properly with others. Installers must also be extremely organized in completing each step required in this specification for a particular project.

B. BUILDING MEASUREMENTS -- The ordering agency is responsible for providing drawings of the area to be designed. The Design Firm may be required to field verify all measurements within the area to be designed relative to the Refurbished Open Space Office Furniture.

C. PROJECT MANAGEMENT -- Each project will be assigned a project manager by the using agency. The agency project manager shall approve each step of the installation process and will work with the installation coordinator during each phase of the project. The agency project manager will assist the installation coordinator in the decision making process when problems with the **installation design plan** or scheduling occur. All changes in the **installation design plan** must be authorized by the agency project manager. A final inspection to ensure compliance with the **installation design plan** will be performed by the agency project manager prior to authorizing final payment of the project. For projects where DESIGN SERVICES is also being performed, the installation coordinator must work with the design coordinator and the agency project manager to ensure the entire project is performed smoothly.

D. PRE-CONSTRUCTION REVIEW MEETING -- The agency project manager will schedule a **pre-construction review meeting** with the Installation Firm to discuss the requirements of the project. Also discussed at the **pre-construction review meeting** will be project details, phasing, scheduling, facility manager interface, and materials handling. The Installation Firm is also responsible for working with the agency project manager to identify specific requirements such as elevator capacity, loading dock regulations, etc., for the facility in which the work is being performed. The Installation Firm is to identify an installation coordinator for the project. This person will be the contact person for the agency project manager. After the **pre-construction review meeting**, the Installation Firm should then begin to assemble an appropriate staff for the project.

E. TIMEFRAMES -- The Installation Firm shall coordinate delivery and installation timeframes with the project manager. The Installation Firm shall also identify a foreman/crew leader to be present on site during the entire INSTALLATION process. The foreman/crew leader is responsible for working with the agency project manager, design coordinator, and installation coordinator to resolve issues that come up throughout the INSTALLATION process. The foreman/crew leader is also responsible for the actions of all installers and other crewmembers.

Installation Specifications
Page 3

F. **BACK-UP PLAN** -- If the primary dealer is unable to complete the project within the timelines specified by the agency project manager, the State expects the dealer to utilize their dealer network in order to complete the project within specified deadlines.

G. **INSTALLATION REQUIREMENTS** **--** The INSTALLATION process shall begin on the same day that the Refurbished Open Space Office Furniture required for the project and ordered from the Contract arrives from the manufacturer, distributor, or warehouse. The following steps should then be followed:

1. The Installation Firm shall be present when the Refurbished Open Space Office Furniture is delivered to the receiving platform/loading dock (or designated area, if no loading dock is available) at the project location (job site) and shall be unloaded and checked-in by the Installation Firm. The receiving receipt will be signed and forwarded to the agency project manager noting any delivery discrepancies. The Installation Firm shall complete a receiving form verifying the quantities delivered.

2. Transport the furniture from the receiving platform/loading dock to the specific project location (job site) in accordance with all facility requirements.

3. Unpackage the furniture, sort, and separate the furniture on the floor, as required. All packaging materials, pallets, etc. shall be removed from the premises, at no cost to the state.

4. For projects that consist of all Refurbished furniture ordered from the Contract, install the Refurbished Open Space Office Furniture in compliance with the approved **Installation Design Plan**.

For projects that consist of a combination of some Refurbished furniture ordered from the Contract and the re-utilization of some existing furniture, the existing furniture to be re-utilized shall be incorporated into the INSTALLATION of the Refurbished furniture. All furniture is to be installed in compliance with the approved **Installation Design Plan**. This may also include some disassembly and re-configuration of the existing furniture.

5. When the INSTALLATION for a project is completed, all Refurbished Open Space Office Furniture installed shall be cleaned prior to occupancy by the agency. This includes wiping down panels and components with a mild detergent to remove dust and dirt accumulated during installation.

6. During the entire INSTALLATION process, precautions shall be taken at all times to protect carpet tiles, adjacent walls, and other furniture from damage. Also, all fire, safety/access, and facility codes, regulations, and requirements shall be adhered to throughout the entire process.

7. After completion of the entire INSTALLATION process, the project location (job site) shall be in a clean and orderly condition. This includes the removal and disposal of all packaging materials, pallets, trash, etc. accumulated during INSTALLATION of a particular project, at no cost to the state. Any remaining product will remain with the agency or be delivered to state surplus.

8. The INSTALLATION of all items ordered to complete the project as a result of the **punch list** generated shall be performed as a part of the initial INSTALLATION process. There shall be no additional charges for the INSTALLATION of these items. All **punch list** items shall be installed within 14 (fourteen) calendar days or a schedule mutually agreed upon with the project manager, after the **punch list** is generated.

9. Ultimately, the Installation Firm is responsible for making sure the INSTALLATION of all furniture is in **TOTAL** compliance with the approved **Installation Design Plan**.

10. Any "tune-up" INSTALLATION or re-configuration required after the initial INSTALLATION is complete, due to minor revisions requested by the agency, shall be provided by the Installation Firm. However, there will be an additional charge paid to the Installation Firm for this step (see PROJECT COST below).

H. COMPLIANCE WITH INSTALLATION DESIGN PLAN -- The Installation Firm shall install all Refurbished Open Space Office Furniture according to the approved **installation design plan** and to the satisfaction of the agency project manager. The plans shall be followed exactly unless changes are authorized by the agency project manager. Most projects will be constructed in phases. The phasing of a project will be defined at the time of the **pre-construction review meeting**.

I. EQUIPMENT -- The Installation Firm is responsible for supplying all tools, vehicles, and related equipment required to perform the INSTALLATION for a project and keep it on schedule.

J. DAILY SCHEDULE -- The daily INSTALLATION schedule shall be communicated to, coordinated with, and approved in advance by the agency project manager.

K. PROGRESS MEETINGS -- Periodic progress meetings may be required by the agency project manager. The Installation Firm is required to advise the agency project manager of any schedule deviations as soon as they are identified.

L. PROJECT COST - When a particular project will consist of all Refurbished furniture to be ordered from the Contract (no re-utilization of existing furniture), the charge for INSTALLATION shall be established by taking the appropriate percentage (%) multiplied by the total net value of the **itemized parts list (bill of materials)**, which was generated during the design process and specifies ALL Refurbished Open Space Office Furniture required for the project. The appropriate percentage (%) to be charged for INSTALLATION shall be taken from the Contract's INSTALLATION INFORMATION SHEET, based on the order level and region. Therefore, the charge for INSTALLATION for this type of project will not be established until after the **itemized parts list (bill of materials)** is generated. (Please note that the INSTALLATION charge for a particular project shall always be calculated by taking the appropriate percentage (%) from the Contract)

INSTALLATION INFORMATION SHEET multiplied by the total net value of the **itemized parts list (bill of materials)** utilizing the prices indicated in the Standard Item listing, even if the order for furniture ends up being placed on the Express delivery program.

When a particular project will consist of a combination of some Refurbished furniture to be ordered from the Contract and the re-utilization of some existing furniture, The charge for INSTALLATION shall be established by taking the dollar amount per hour from the Contract's INSTALLATION INFORMATION SHEET multiplied by the total hours required to install the project. The Installation Firm shall provide a detailed estimate of the hours that will be required for each step of the project within five (5) calendar days after the **pre-construction review meeting**. Therefore, the estimated charge for INSTALLATION for this type of project will be established within five (5) calendar days after the **pre-construction review meeting**. Any changes from the number of hours originally quoted must be pre-approved by the agency project manager.

Please note that the dollar amount per hour on the Contract's INSTALLATION INFORMATION SHEET will also apply to projects requiring additional INSTALLATION after the initial INSTALLATION is completed in compliance with these specifications. These figures will kick-in when the agency requires "tune-up" INSTALLATION or re-configuration due to minor revisions requested by the agency.

When a particular project will consist of the disassembly of all existing furniture and the installation of all Refurbished furniture ordered from the Contract, the charge for this entire process shall be express as a dollar figure. This figure should be expressed as a dollar amount per hour on the attached INSTALLATION INFORMATION SHEET. The actual time required to complete the installation, breakdown, and removal will be multiplied by the dollar amount per hour to determine the cost for installing the project, including transportation time. The appropriate dollar figure per hour to be charged for INSTALLATION shall be taken from the Contract's INSTALLATION INFORMATION SHEET, based on the order level and region.

Based on the Contractor’s distribution system, there should not be a need for additional travel expenses for driving time, mileage, and other expenses for any project unless pre-authorized by the project manager. All costs associated with these functions shall be factored into the dollar amounts quoted on the attached INSTALLATION INFORMATION SHEET.

M. **SMALL PROJECTS** The actual time required to complete the installation will be multiplied by the dollar amount per hour to determine the cost for installing the project. Transportation costs may be paid on a pre-authorized basis only. **The Contractor is required to perform all requests for INSTALLATION, regardless of the project size. For small projects, the maximum response time shall be 10 (ten) workdays.**

Installation Specifications
Page 6

N. "BENCHMARK" -- A "benchmark" will be established based on the Time Study hours listed in the contractor's proposal, as described in the INSTALLATION statement in the attached Terms and Conditions, will be used for determining the amount of time required to install a particular project. This benchmark per workstation for INSTALLATION will therefore be established and included in the Contract. Deviations from the "benchmark" must be documented and approved by the agency. Purchasing Operations reserves the right to audit the number of hours quoted for a particular project, and compare it with the "benchmark" included in the Contract. If it is determined that the number of hours quoted for a project is excessive and not in line with the "benchmark", Purchasing Operations reserves the right to calculate the number of hours for a project utilizing the "benchmark" and require that the charge for INSTALLATION be based on the number of hours generated by Purchasing Operations.

O. MOVE-IN SUPPORT -- The Contractor will **provide** installation resources for the purpose of Move-In Support, when requested by the State, for a specific project when the Contractor has performed the initial installation services, at no additional cost to the State. The purpose of the Move-In Support is for the Contractor to 1) Conduct a pre-move-in walk-through with the State, the day before the scheduled move-in, to identify and to correct any last minute minor punch list items that can be corrected that day and 2) Provide an installer on-site, the day of agency move-in, to facilitate minor workstation adjustments (i.e. raising/lowering work surfaces and overhead storage unit), under the direction of the Department of Management and Budget, Office of Facilities, and the agency project manager.

P. INSTALLATION QUALITY -- All installations shall be completed in a quality manner as determined by the State. The Contractor will be responsible for providing additional service required to bring unacceptable quality workmanship up to desired State quality levels, at no additional cost to the State. The State reserves the right of final determination of acceptable quality installation.

REFURBISHED LATERAL FILE SPECIFICATIONS

SPECIFICATIONS

Definite Specifications - All commodities and services to be furnished hereunder shall conform to the specifications as noted in the specifications attached.

Purchasing Operations shall be notified immediately of any manufacturing and/or engineering changes to the file cabinets that may occur throughout the entire length of the Contract. The state reserves the right to reject the changes and require that the Contractor continue to provide the original file cabinets approved by the state. (Please note that the state will reject changes to file cabinets ONLY if it feels that the changes have in some way decreased the quality and acceptability of the file cabinets or have caused the file cabinets to no longer be in compliance with the State of Michigan Specifications for Lateral File Cabinets.)

PRODUCT SPECIFICATIONS

1. Categories and Types

Lateral file cabinets shall be available in the following categories, types, and sizes.

Category A - Lateral File Cabinet; Fixed **shelf**; with and without lift-up receding doors; with and without lock.

Type 1 - **30”** width.
2, 3, 4, and 5 openings high.

Type 2 - **36”** width.
2, 3, 4, and 5 openings high.

Type 3 - **42”** width.
2, 3, 4, and 5 openings high.

Category B - Lateral File Cabinet; Roll **out shelf**; with and without lift-up receding doors; with and without lock.

Type 1 - **30”** width.
2, 3, 4, and 5 openings high.

Type 2 - **36”** width.

2, 3, 4, and 5 openings high.

Type 3 - **42”** width.
2, 3, 4, and 5 openings high.

Refurbished Lateral File Cabinet Specifications
Page 2

Category C - Lateral File Cabinet; Roll **out drawer (fixed front)**; With and without lock; Top opening on 5 opening high unit shall be a roll out shelf with lift-up receding door.

Type 1 - **30"** width.
2, 3, 4, and 5 openings high.

Type 2 - **36"** width.
2, 3, 4, and 5 openings high.

Type 3 - **42"** width.
2, 3, 4, and 5 openings high.

Category D - **Overfile Cabinet**; Fixed shelf; One opening high (approximately 16" high); with and without sliding doors; with and without lock.

Type 1 - **30"** width.

Type 2 - **36"** width.

Type 3 - **42"** width.

2. Materials and Workmanship

All materials, including the type of steel, used in the manufacturing of the lateral file cabinets to be used by the State of Michigan shall be those which are best suited to produce a quality product. The workmanship shall be such as to provide proper forming to avoid sharp edges, smooth straight bending of channels and flanges, strength of welding and bracing, accuracy of moving parts, good fit of drawers, and freedom from sag or set. All products shall be free from defects, which affect the appearance, operation, and serviceability of the products. The cabinet case shall be constructed with an interior steel framework, preventing the cabinet from excessive twisting and oil canning of the steel outer skin, and providing for an overall solid construction. The bottom of the file cabinet shall be absent of sharp edges that could damage carpets and shall be completely finished (not open) to provide added stability, unless the file cabinet is of a modular design whereby additional stability is obtained by the individual framework of each section. All products shall be equal to those supplied to the general trade, and shall also be the same as those listed in the manufacturers most current catalog, specifications, and other literature.

All products shall be designed and manufactured to withstand daily use over an extended period of time with minimum maintenance and repair. All products shall be free from rough and sharp edges, and all corners shall be radiused or protected. All lateral filing cabinets shall conform to ALL requirements of the ANSI/BIFMA X 5.2 (current edition) test for lateral file cabinets.

3. Specific Requirements

Listed below are the specific requirements and individual features that shall be incorporated into the lateral file cabinets to be used by the State of Michigan. These specifications are not intended to describe all the details of construction or materials used, as it is recognized that there is a variation in the manufacturing process by manufacturers who produce filing cabinets.

Refurbished Lateral File Cabinet Specifications
Page 3

A. **Drawer** - All drawers shall have 4 (four) sides, in order to prevent papers from accidentally falling into the actual cabinet case. All drawers shall be equipped with an **anti-rebound** mechanism, preventing the drawer from re-opening immediately after it has been closed.

B. **Interlock** - There shall be a safety device incorporated into the design that allows only 1 (one) drawer to be in the rolled out position at a time.

C. **Leveling Glides -** Cabinets shall be equipped with 4 (four) adjustable steel leveling glides, with approximately 5/8" adjustment, and coated with a non-rusting material.

D. **Drawer Suspension -** All roll out-shelves and drawers shall run smoothly on full extension, steel ball bearing suspensions, and shall operate friction-free without binding or racking when accessing from the center or either side.

E. **Door Slides -** All lift-up receding doors shall run smoothly on full extension slides, and shall operate friction-free without binding or racking when accessing from the center or either side.

F. **Inserts -** All lateral file cabinets shall come standard with either 3 (three) shelf dividers or 1 (one) hanging folder frame (to accomplish letter size, side-to-side filing) per opening. All openings with hanging folder frames shall be capable of being converted to front-to-back filing.

G. **Shelf Depth Modifier -** All lateral file cabinet openings shall have the capability of being set-up as both letter size and legal size depth, at no additional charge. 1 (one) shelf depth modifier per opening is acceptable.

H. **Ganging -** A mechanism shall be available in order to allow lateral file cabinets to be ganged together (either side-to-side or back-to-back) or attached to a wall.

I. **Lock -** When specified, a central locking mechanism shall be provided which will lock all doors or drawers in the file cabinet. Two keys shall be supplied with each lock.

J. **Finish and Color -** Lateral file cabinets shall be suitably undercoated with a rust inhibiting primer (or subjected to a phosphatizing process inside and out), and shall be finished with a baking enamel, or equivalent. Manufacturers standard colors will be acceptable.

K. **Face Hardware -** Door and drawer pulls shall be full width, flush, and integrated into the front of the door and/or drawer. Each opening shall include a label holder. Plastic and self-adhesive label holders are acceptable. All label holders shall be flush.

L. **Caution Label -** A caution label shall be affixed to the cabinet interior in a highly visible location. The label shall display such information as cabinet leveling procedures, loading techniques, recommendations for weight distribution, general safety precautions, etc.

M. **Depth -** Lateral file cabinets shall be a minimum 17 inches deep.

N. **Options -** Other various options, such as laminate tops, posting shelves, half-height drawers, card tray inserts, counter weights, etc. shall also be available.

APPENDIX B

REFURBISHED OPEN SPACE OFFICE FURNITURE PRODUCT LINES BY CATEGORY

The table below specifies the product lines by category. The State of Michigan reserves the right to determine if alternate products are equivalent to the product below.

Manufacturer	Basic Line
Haworth	Unigroup

***Alternate Refurbished Supplemental Pedestal Files are also available.**

REFURBISHED LATERAL FILES RECOMMENDED BRAND LIST

The table below specifies the product line of lateral files. The State of Michigan reserves the right to determine if alternate products are equivalent to the product below.

Manufacturer	Basic Line
Haworth	950 Series

APPENDIX C
PRICING SHEETS

REFURBISHED OPEN SPACE OFFICE FURNITURE
DUAL AWARD DISCOUNT

This table indicates the percentage off list price for each product line offered for each specified delivery option based on a DUAL Contract award. Agencies shall reference the column with the delivery discount less the administrative fee when calculating product costs.

PRODUCT LINE	STANDARD DELIVERY DISCOUNT	STANDARD DELIVERY DISCOUNT (Less Admin Fee)	EXPRESS DELIVERY DISCOUNT	EXPRESS DELIVERY DISCOUNT (Less Admin Fee)	RAPID RESPONSE DISCOUNT	RAPID RESPONSE DISCOUNT (Less Admin Fee)
Remanufactured Unigroup – Power Base	80.2%	79.2%	75.8%	74.8%	72.5%	71.5%
Remanufactured 950 Series Lateral Files (Drop Ship Only)	80.2%	79.2%	75.8%	74.8%	72.5%	71.5%
AS-IS Unigroup – Power Base	86.2%	85.2%	83.5%	82.5%	80.7%	79.7%
Alternate Refurbished Supplemental Pedestal Files	79.2%	78.2%	74.8%	73.8%	71.5%	70.5%

Also, please indicate the date of the manufacturer's printed list price/catalog used to calculate the price quoted for each item on the attached Item Listings.

SOS Remanufactured Haworth Systems Catalog 1 / 1 / 08
SOS Remanufactured Haworth Lateral File Catalog 1 / 1 / 08
Alternate Refurbished Supplemental Pedestal Files 9/1/08

APPENDIX C
PRICING SHEETS

REFURBISHED OPEN SPACE OFFICE FURNITURE
ITEM LISTING FOR WORKSTATION CLUSTER

Listed below are all the products needed to construct the six (6) workstation cluster workstation cluster on the attached **Appendix F - Workstation Cluster"**, as well as the contract price for each item by delivery option. This listing consists of components from **Unigroup** applying the discount for a **DUAL** Contract.

					Standard Delivery		Express Delivery	
Qty	**Unit**	**Product Number**	**Description**	**List Price**	**Unit Price**	**Total Price**	**Unit Price**	**Total Price**
6	Each	HFPA18062B	Finish Post Asm, 180ø, 62", Power Base	$155.00	$30.29	$30.29	$37.03	$37.03
1	Each	HFPA9042B	Finish Post Asm, 90ø, 42", Power Base	$153.00	$33.66	$134.64	$41.14	$164.56
4	Each	HFPA9062B	Finish Post Asm, 90ø, 62", Power Base	$170.00	$158.80	$317.60	$194.08	$388.16
2	Each	HPF1862PB	Panel Fabric, 18x62, Power Base, w/Pwr	$802.00	$122.76	$122.76	$150.04	$150.04
1	Each	HPF2442B	Panel Fabric, 24x42, Power Base, w/o Pwr	$620.00	$153.45	$153.45	$187.55	$187.55
1	Each	HPF2442PB	Panel Fabric, 24x42, Power Base, w/Pwr	$775.00	$135.43	$541.72	$165.53	$662.12
4	Each	HPF2462B	Panel Fabric, 24x62, Power Base, w/o Pwr	$684.00	$166.12	$1,162.84	$203.04	$1,421.28
7	Each	HPF2462PB	Panel Fabric, 24x62, Power Base, w/Pwr	$839.00	$166.52	$166.52	$203.52	$203.52
1	Each	HPF3042PB	Panel Fabric, 30x42, Power Base, w/Pwr	$841.00	$154.04	$154.04	$188.28	$188.28
1	Each	HPF3062B	Panel Fabric, 30x62, Power Base, w/o Pwr	$778.00	$184.73	$923.65	$225.79	$1,128.95
5	Each	HPF3062PB	Panel Fabric, 30x62, Power Base, w/Pwr	$933.00	$30.29	$30.29	$37.03	$37.03

					Standard Delivery		Express Delivery	
Qty	Unit	Product Number	Description	List Price	Unit Price	Total Price	Unit Price	Total Price
1	Each	HPF3642B	Panel Fabric, 36x42, Power Base, w/o Pwr	$725.00	$143.55	$143.55	$175.45	$175.45
3	Each	HPF3662B	Panel Fabric, 36x62, Power Base, w/o Pwr	$825.00	$163.35	$490.05	$199.65	$598.95
3	Each	HPF3662PB	Panel Fabric, 36x62, Power Base, w/Pwr	$980.00	$194.04	$582.12	$237.16	$711.48
15	Each	HPF4262PB	Panel Fabric, 42x62, Power Base, w/Pwr	$1,044.00	$206.71	$3,100.65	$252.65	$3,789.75
3	Each	HPG1262PB	Panel Glazed, 12x62, Power Base, w/Pwr	$992.00	$196.42	$589.26	$240.06	$720.18
1	Each	HPG3662PB	Panel Glazed, 36x62, Power Base, w/Pwr	$1,461.00	$289.28	$289.28	$353.56	$353.56
1	Each	HBFB	Base Feed , Power Base	$414.00	$81.97	$81.97	$100.19	$100.19
28	Each	HPRB	Power Receptacle, Power Base	$41.00	$8.12	$227.36	$9.92	$277.76
10	Each	HECB	End Cap, Power Base	$18.00	$3.56	$35.60	$4.36	$43.60
3	Each	HWK12	Wainscot Kit, 12"	$395.00	$78.21	$234.63	$95.59	$286.77
1	Each	HWK36	Wainscot Kit, 36"	$623.00	$123.35	$123.35	$150.77	$150.77
3	Each	HFDAF30R	Flipper Door Asm, Fabric, Regular, 30"	$391.00	$77.42	$232.26	$94.62	$283.86
1	Each	HFDAF36R	Flipper Door Asm, Fabric, Regular, 36"	$412.00	$81.58	$81.58	$99.70	$99.70
4	Each	HFDAF42R	Flipper Door Asm, Fabric, Regular, 42"	$428.00	$84.74	$338.96	$103.58	$414.32
3	Each	HSA30R	Shelf Asm, Regular, 30"	$266.00	$52.67	$158.01	$64.37	$193.11
1	Each	HSA36R	Shelf Asm, Regular, 36"	$274.00	$54.25	$54.25	$66.31	$66.31
4	Each	HSA42R	Shelf Asm, Regular, 42"	$281.00	$55.64	$222.56	$68.00	$272.00
3	Each	HTBA3016	Tackboard Asm, 30x16	$166.00	$32.87	$98.61	$40.17	$120.51
2	Each	HTBA3616	Tackboard Asm, 36x16	$172.00	$34.06	$68.12	$41.62	$83.24

					Standard Delivery		Express Delivery	
Qty	**Unit**	**Product Number**	**Description**	**List Price**	**Unit Price**	**Total Price**	**Unit Price**	**Total Price**
6	Each	HTBA4216	Tackboard Asm, 42x16	$183.00	$36.23	$217.38	$44.29	$265.74
3	Each	HTL24P	Task Light, 24", Painted	$219.00	$43.36	$130.08	$53.00	$159.00
5	Each	HTL36P	Task Light, 36", Painted	$266.00	$52.67	$263.35	$64.37	$321.85
1	Each	HWSSC	Work Surface Support Column	$364.00	$72.07	$72.07	$88.09	$88.09
20	Each	FB	Flat Bracket	$7.00	$1.39	$27.80	$1.69	$33.80
1	Each	HTTT30	Transaction Top, T-Mold, 30"	$338.00	$66.92	$66.92	$81.80	$81.80
1	Each	HTTT36	Transaction Top, T-Mold, 36"	$352.00	$69.70	$69.70	$85.18	$85.18
1	Each	HTTTRA24	Transaction Top, Right Angle, T-Mold, 24"	$504.00	$99.79	$99.79	$121.97	$121.97
6	Each	HTWS3024	Work Surface, T-Mold, 30x24	$331.00	$65.54	$393.24	$80.10	$480.60
1	Each	HTWS3224	Work Surface, T-Mold, 32x24	$355.00	$70.29	$70.29	$85.91	$85.91
4	Each	HTWS3624	Work Surface, T-Mold, 36x24	$355.00	$70.29	$281.16	$85.91	$343.64
2	Each	HTWS4224	Work Surface, T-Mold, 42x24	$376.00	$74.45	$148.90	$90.99	$181.98
1	Each	HTWS4824	Work Surface, T-Mold, 48x24	$395.00	$78.21	$78.21	$95.59	$95.59
3	Each	HTWS5424	Work Surface, T-Mold, 54x24	$418.00	$82.76	$248.28	$101.16	$303.48
1	Each	HTWS7224	Work Surface, T-Mold, 72x24	$610.00	$120.78	$120.78	$147.62	$147.62
8	Each	HTWSCC4224	Work Surface Curved Corner, T-Mold, 42x24	$537.00	$106.33	$850.64	$129.95	$1,039.60
1	Each	HTWSD6030	Work Surface D-Shape, T-Mold, 60x30	$732.00	$144.94	$144.94	$177.14	$177.14
2	Each	LN1911	Wardrobe, L-dr, B/b/f, Side Bc, 64”H	$3,434.00	$679.93	$1,359.86	$831.03	$1,662.06

					Standard Delivery		Express Delivery	
Qty	**Unit**	**Product Number**	**Description**	**List Price**	**Unit Price**	**Total Price**	**Unit Price**	**Total Price**
4	Each	MN1911	Wardrobe, R-dr, B/b/f, Side Bc, 64”H	$3,434.00	$679.93	$2,719.72	$831.03	$3,324.12
3	Each	RW0101	Lateral File, 2 Drawer, 30", Freestanding	$1,092.00	$216.22	$648.66	$264.26	$792.78
1	Each	RW0602	Lateral File, 3 Drawer, 42", Freestanding	$1,721.00	$340.76	$340.76	$416.48	$416.48
				Totals		**$19,212.21**		**$23,481.43**

APPENDIX C
PRICING SHEETS

REFURBISHED OPEN SPACE OFFICE FURNITURE
DESIGN SERVICES INFORMATION SHEET- DUAL AWARD

The **first level** of **DESIGN SERVICES** (with the exception of small projects) is when all Refurbished Open Space Office Furniture is going to be ordered and workstations need to be designed. Indicated below are the **DESIGN SERVICES** charges for each order level and zone. These charges are expressed as a percentage (%) to be multiplied by the total net Contract value of the order for the furniture that will be required. (See **DESIGN SERVICES** Statement in the attached terms and conditions.) Order levels are net product values. See the attached **Appendix E – Zone Map** for counties allocated by zone.

Zone/Order Level	Standard Delivery Program	Express Delivery Program	Rapid Response
Zone 1 – Metro Region **< $100,000** **> $100,000**	3.00 % 2.85%	3.00 % 2.85%	3.50 % 3.35%
Zone 2- University Region **< $100,000** **> $100,000**	3.00 % 2.85%	3.00 % 2.85%	3.50 % 3.35%
Zone 3 – Southwest Region **< $100,000** **< $100,000**	3.00 % 2.85%	3.00 % 2.85%	3.50 % 3.35%
Zone 4 – Bay Region **< $100,000** **> $100,000**	3.00 % 2.85%	3.00 % 2.85%	3.50 % 3.35%
Zone 5 – North Region **< $100,000** **> $100,000**	3.25 % 2.95%	3.25 % 2.95%	3.75 % 3.45%
Zone 6 – Superior Region **< $100,000** **> $100,000**	3.40 % 3.05 %	3.40 % 3.05 %	3.90 % 3.55 %

APPENDIX C
PRICING SHEETS

REFURBISHED OPEN SPACE OFFICE FURNITURE
DESIGN SERVICES INFORMATION SHEET- DUAL AWARD

The **second level** of **DESIGN SERVICES** is when workstations need to be designed and the installation will consist of a combination of Refurbished Open Space Office Furniture ordered from this Contract and existing furniture. This **DESIGN SERVICES** charge is indicated below as a dollar amount per hour.

$35.00 per hour

Premium Services (Evenings and Weekends)

$52.50 per hour

The dollar amount per hour expressed will also apply to projects requiring all refurbished furniture to be ordered from the Contract when the initial DESIGN SERVICES required for the project have been completed in compliance with the attached DESIGN SERVICES specifications. This figure will apply when the agency requires additional DESIGN SERVICES (due to further changes, a requirement to meet with each individual in the office, "tune up" design, etc.), above and beyond what is required by the attached specifications.

Indicated below are standard time frames generally allotted for various size projects based on the number of workstations:

Design Tasks	**Timeframe for Completion**				
	Number of Workstations				
	10-29	30-59	60-89	90-149	150+
Schematics Design Block Plan,	1.86 hrs	4.10	6.81	10.89	13.07
Preliminary Design Block Plan	2.78	6.15	10.21	16.34	19.61
Installation Design Plan	1.86	4.10	6.81	10.89	13.07
Itemized Parts List	2.78	6.15	10.21	16.34	19.61

Indicated below is the estimated number of hours required for communication with the agency for each of the following tasks based on the number of workstations:

Design Tasks	**Number of Communication Hours Required**				
	Number of Workstations				
	10-29	**30-59**	**60-89**	**90-149**	**150+**
Agency Programming	1.86 hr	4.10	6.81	10.89	13.07
Pre-Design Review Meeting	2.78	6.15	10.21	16.34	19.61
Schematics Design Block Plan,	1.86	4.10	6.81	10.89	13.07
Preliminary Design Block Plan	2.78	6.15	10.21	16.34	19.61
Installation Design Plan	1.86	4.10	6.81	10.89	13.07
Itemized Parts List	1.86	4.10	6.81	10.89	13.07
Project Cost	1.86	4.10	6.81	10.89	13.07
Punch List	3.48	7.68	12.75	20.40	24.48
“Tune-Up" Design	2.78	6.15	10.21	16.34	19.61

APPENDIX C
PRICING SHEETS

REFURBISHED OPEN SPACE OFFICE FURNITURE
INSTALLATION SERVICES INFORMATION SHEET – DUAL AWARD

The **first level** of **INSTALLATION** is when all Refurbished Open Space Office Furniture is going to be ordered and workstations need to be installed. Indicated below are the **INSTALLATION** charges for each order level and zone. These charges are expressed as a percentage (%) to be multiplied by the total net Contract value of the order for the furniture that will be required. (See **INSTALLATION** Statement in the attached terms and conditions.) Order levels are net product values. See the attached **Appendix E – Zone Map** for counties allocated by zone.

Zone/Order Level	Standard Delivery Program	Express Delivery Program	Rapid Response	Additional % Charge for Premium Service
Zone 1 – Metro Region < $100,000 > $100,000	14.5% 14.5%	14.5% 14.5%	14.5% 14.5%	14.5% 14.5%
Zone 2- University Region < $100,000 > $100,000	13.1% 13.1%	13.1% 13.1%	13.1% 13.1%	13.1% 13.1%
Zone 3 – Southwest Region < $100,000 < $100,000	14.0% 14.0%	14.0% 14.0%	14.0% 14.0%	14.0% 14.0%
Zone 4 – Bay Region < $100,000 > $100,000	14.5% 14.5%	14.5% 14.5%	14.5% 14.5%	14.5% 14.5%
Zone 5 – North Region < $100,000 > $100,000	15.5% 15.5%	15.5% 15.5%	15.5% 15.5%	15.5% 15.5%
Zone 6 – Superior Region < $100,000 > $100,000	17.0% 17.0%	17.0% 17.0%	17.0% 17.0%	17.0% 17.0%

APPENDIX C
PRICING SHEETS

REFURBISHED OPEN SPACE OFFICE FURNITURE
INSTALLATION SERVICES INFORMATION SHEET - DUAL AWARD

The **second level** of **INSTALLATION** is when workstations need to be installed and the installation will consist of a combination of Refurbished Open Space Office Furniture ordered from this Contract and existing furniture. This **INSTALLATION** charge is indicated below as a dollar amount per hour.

ZONE	Hourly Installation Rate 2nd Level		
	LABORER	CARPENTER	ELECTRICIAN
Zone 1 - Metro Regular Time Time and One Half Double Time	$53.50 $78.50 $103.50	$58.50 $83.50 $108.50	$87.00 $129.00 $169.00
Zone 2 – University Region Regular Time Time and One Half Double Time	$53.50 $78.50 $103.50	$58.50 $83.50 $108.50	$87.00 $129.00 $169.00
Zone 3 – Southwest Region Regular Time Time and One Half Double Time	$53.50 $78.50 $103.50	$58.50 $83.50 $108.50	$87.00 $129.00 $169.00
Zone 4 – Bay Region Regular Time Time and One Half Double Time	$53.50 $78.50 $103.50	$58.50 $83.50 $108.50	$87.00 $129.00 $169.00
Zone 5 – North Region Regular Time Time and One Half Double Time	$53.50 $78.50 $103.50	$58.50 $83.50 $108.50	$87.00 $129.00 $169.00
Zone 6 – Superior Region Regular Time Time and One Half Double Time	$53.50 $78.50 $103.50	$58.50 $83.50 $108.50	$87.00 $129.00 $169.00

Note: Regular Time, Time and One Half, and Double Time are to be paid as dictated by the prevailing wage board.

The dollar amount per hour expressed will also apply to projects requiring additional INSTALLATION after the initial INSTALLATION is completed in compliance with the attached INSTALLATION specifications. This figure will kick-in when the agency requires "tune-up" INSTALLATION or re-configuration due to minor revisions requested by the agency.

APPENDIX C
PRICING SHEETS

REFURBISHED OPEN SPACE OFFICE FURNITURE
INSTALLATION SERVICES INFORMATION SHEET- DUAL AWARD

The **third level** of **INSTALLATION** is when workstations need to be installed and the installation requires the breakdown of existing furniture combined with installation of existing and Refurbished Open Space Office Furniture ordered from this Contract. Teardown of existing workstations may or may not include removal. Indicated below are the charges for this entire process for each order level and zone. This figure is expressed as a dollar amount per hour. The actual time required to complete the breakdown, installation, and removal will be multiplied by the dollar amount per hour to determine the cost for installing the project, including transportation time. A map is included In **Appendix E – Zone Map** for reference purposes. (See **INSTALLATION** Statement in the attached terms and conditions.)

ZONE	Hourly Installation Rate 3rd Level		
	LABORER	CARPENTER	ELECTRICIAN
Zone 1 – Metro Region Regular Time Time and One Half Double Time	$53.50 $78.50 $103.50	$58.50 $83.50 $108.50	$87.00 $129.00 $169.00
Zone 2 – University Region Regular Time Time and One Half Double Time	$53.50 $78.50 $103.50	$58.50 $83.50 $108.50	$87.00 $129.00 $169.00
Zone 3 –Southwest Region Regular Time Time and One Half Double Time	$53.50 $78.50 $103.50	$58.50 $83.50 $108.50	$87.00 $129.00 $169.00
Zone 4 – Bay Region Regular Time Time and One Half Double Time	$53.50 $78.50 $103.50	$58.50 $83.50 $108.50	$87.00 $129.00 $169.00
Zone 5 – North Region Regular Time Time and One Half Double Time	$53.50 $78.50 $103.50	$58.50 $83.50 $108.50	$87.00 $129.00 $169.00
Zone 6 – Superior Region Regular Time Time and One Half Double Time	$53.50 $78.50 $103.50	$58.50 $83.50 $108.50	$87.00 $129.00 $169.00

Note: Regular Time, Time and One Half, and Double Time are to be paid as dictated by the prevailing wage board.

APPENDIX C
PRICING SHEETS

REFURBISHED OPEN SPACE OFFICE FURNITURE
INSTALLATION SERVICES INFORMATION SHEET- DUAL AWARD

The **fourth level** of **INSTALLATION** is when workstations need to be torndown, palletized, shrink wrapped, removed and delivered to a specified dock. Indicated below are the charges for this entire process for each order level and zone. This figure is expressed as a dollar amount per hour. The actual time required to complete the teardown from the timestudies will be multiplied by the dollar amount per hour to determine the cost for installing the project, including transportation time. Please refer to the attached Appendix E - Zone Map for reference purposes. (See **INSTALLATION** statement in the attached terms and conditions.)

ZONE	Hourly Installation Rate 4th Level		
	LABORER	CARPENTER	ELECTRICIAN
Zone 1 – Metro Region Regular Time Time and One Half Double Time	$53.50 $78.50 $103.50	$58.50 $83.50 $108.50	$87.00 $129.00 $169.00
Zone 2- University Region Regular Time Time and One Half Double Time	$53.50 $78.50 $103.50	$58.50 $83.50 $108.50	$87.00 $129.00 $169.00
Zone 3 – Southwest Region Regular Time Time and One Half Double Time	$53.50 $78.50 $103.50	$58.50 $83.50 $108.50	$87.00 $129.00 $169.00
Zone 4 – Bay Region Regular Time Time and One Half Double Time	$53.50 $78.50 $103.50	$58.50 $83.50 $108.50	$87.00 $129.00 $169.00
Zone 5 – North Region Regular Time Time and One Half Double Time	$53.50 $78.50 $103.50	$58.50 $83.50 $108.50	$87.00 $129.00 $169.00
Zone 6 – Superior Region Regular Time Time and One Half Double Time	$53.50 $78.50 $103.50	$58.50 $83.50 $108.50	$87.00 $129.00 $169.00

APPENDIX C
PRICING SHEETS

REFURBISHED OPEN SPACE OFFICE FURNITURE
INSTALLATION SERVICES INFORMATION SHEET- DUAL AWARD

The **fifth level** of **INSTALLATION** is when workstations need to be re-configured and no additional furniture is needed from this contract. Indicated below are the charges for this entire process for each order level and zone. This figure is expressed as a dollar amount per hour. The actual time required to complete the re-configuration from the timestudies will be multiplied by the dollar amount per hour to determine the cost for installing the project, including transportation time. A map is included In **Appendix E – Zone Map** for reference purposes. (See **INSTALLATION** statement in the attached terms and conditions.)

ZONE	Hourly Installation Rate 5th Level		
	LABORER	CARPENTER	ELECTRICIAN
Zone 1 – Metro Region Regular Time Time and One Half Double Time	$53.50 $78.50 $103.50	$58.50 $83.50 $108.50	$87.00 $129.00 $169.00
Zone 2- University Region Regular Time Time and One Half Double Time	$53.50 $78.50 $103.50	$58.50 $83.50 $108.50	$87.00 $129.00 $169.00
Zone 3 – Southwest Region Regular Time Time and One Half Double Time	$53.50 $78.50 $103.50	$58.50 $83.50 $108.50	$87.00 $129.00 $169.00
Zone 4 – Bay Region Regular Time Time and One Half Double Time	$53.50 $78.50 $103.50	$58.50 $83.50 $108.50	$87.00 $129.00 $169.00
Zone 5 – North Region Regular Time Time and One Half Double Time	$53.50 $78.50 $103.50	$58.50 $83.50 $108.50	$87.00 $129.00 $169.00
Zone 6 – Superior Region Regular Time Time and One Half Double Time	$53.50 $78.50 $103.50	$58.50 $83.50 $108.50	$87.00 $129.00 $169.00

APPENDIX C
PRICING SHEETS

TIME STUDIES

Time studies are the assembly time required to install the six (6) workstation cluster drawings included in Appendix F. This is based on the dealer installing **Unigroup**, with the conditions indicated below. This will be used as a benchmark.

Installation Level	Task for 6 Workstation Cluster	Total Hours Required
Level 1, 2, and 3	Installation	28 hrs
Level 3 and 4	Teardown Time	14.4 hrs
Level 5	Re-configuration only (no furniture added)	22.6 hrs
Grand Total Hours		65 hrs

CONDITIONS

Time studies **shall include all tasks** involved from the time the truck pulls up to the site to the completion of installation including trash removal and cleaning of the site.

The following conditions are included when calculating time-study hours.

a) Street unloads with a short push (less than 25 feet from the back of the truck to the front doors of the facility.
b) Time study hours include unloading, push to location site, uncarton, unpacking, staging and removal of topcaps and baseplates
c) Installation took place on the 1st floor (no vertical transportation required)
d) The site was clean and completely void of other trades and services being rendered.
e) Free and clear access to loading docks and elevators, both of which are the proper size to accommodate Seller's products.
f) Hours shall include trash disposal, wipe down or cleaning of the site.
g) Job site is punched and accepted by client before delivery and installation
h) The installation is not conducted in any certain order.

Indicated below are the time study hours including the total time duration as well as the total billable man-hours. (e.g. 4 men X 2 hours = 8 total billable man hours)

Time Duration in Hours for Cluster of workstations #1-#6 listed Appendix E:	Multiplied by number of men used for installation	Equals Total Billable Man Hours for installation
5.05 Hours	**X 4 = Men**	**20.20= Billable Hours**

PREVAILING WAGE RATES

Prevailing wage rates only apply to work being performed in State owned, controlled or leased buildings.
The prevailing wage classification is defined as **laborer**, unless otherwise specified. This wage classification will be applied to the applicable zone.

NON-PREVAILING WAGE RATES

Prevailing wage rates only apply to work performed in State owned, controlled or leased buildings. The non-prevailing wage rate applies to all other work.

Non Prevailing Wage Rate:	**$35.00**

Time studies to perform the re-furbishing services below using the six (6) workstation cluster drawings are included in Appendix F. This will be used as a benchmark.

For work performed in a State owned or leased facility:

Task for 6 Workstation Cluster	Hours Required	Hourly Wage	Total Cost
Clean	8.5 hrs	$58.50	$497.25
Re-fabric	N/A*	N/A*	N/A*
Re-laminate	N/A*	N/A*	N/A*
Re-paint	N/A*	N/A*	N/A*
Re-fabric, clean	N/A*	N/A*	N/A*
Re-fabric, Re-laminate, and Clean	N/A*	N/A*	N/A*
Re-fabric, Re-laminate, Repaint, and Clean	N/A*	N/A*	N/A*

***These tasks will be performed at the contractor's facility, therefore, prevailing wage rates do not apply.**

**Tasks for 6 Workstation Cluster	Hours Required	Hourly Wage	Total Cost
Clean	8.5 hrs	$35.00	$297.50
Re-fabric	48 hrs	$35.00	$1,680.00
Re-laminate	18.5 hrs	$35.00	$647.50
Re-paint	48.5 hrs	$35.00	$1,697.50
Re-fabric, clean	51 hrs	$35.00	$1,785.00
Re-fabric, Re-laminate, and Clean	69.5 hrs	$35.00	$2,423.50
Re-fabric, Re-laminate, Repaint, and Clean	115 hrs	$35.00	$4,025.00

**** Excludes labor hours to disassemble and reassemble in State owned buildings. Hours shall reflect actual time to conduct re-furbishing services only.**

APPENDIX C
PRICING SHEETS

DESIGN CALCULATION SHEET - DUAL AWARD

DESIGN SERVICES:

Indicated below are the design charges for the six (6) workstation cluster on the attached Appendix F - "Workstation cluster" form. This figure is first expressed as a percentage (%), taken from Appendix C - DESIGN SERVICES INFORMATION SHEET from the column that represents the Total for Furniture from the Standard Delivery Item Listing and the row representing Zone 2 – University Region, for orders equal to or over $100,000. The percentage is then multiplied by the Total Cost for Furniture from the Standard Delivery Item Listing. (See ITEM LISTING Statement in Terms and Conditions.)

% for Design Services		Total Bid for Furniture from the Standard Item listing		Total Amount For DESIGN SERVICES
2.85%	X	$17,186.60	=	$489.82

% for Design Services		Total Bid for Furniture from the Express Item listing		Total Amount for DESIGN SERVICES
2.85%	X	$21,006.08	=	$598.67

APPENDIX C
PRICING SHEETS

INSTALLATION CALCULATION SHEET- DUAL AWARD

Indicated below are the installation charges to install the six-workstation cluster on the attached **Appendix F** - "Workstation Cluster". This figure is first expressed as a percentage (%), taken from the INSTALLATION SERVICES INFORMATION SHEET from the column that represents the Total for Furniture from the Standard Delivery Item Listing and the row representing Zone 2 – University Region, for orders equal to or over $100,000. The percentage is then multiplied by the Total for Furniture from the Standard Delivery Item Listing. (See ITEM LISTING Statement in Terms and Conditions.) Hourly rates are based on the prevailing wage rate for Carpenter per level of installation multiplied by the hours from the time study for the services indicated below.

Install Conditions

1. Total hourly rates are based on the prevailing wage rate for **Carpenter,** for Zone 2, for orders over $100,000.

2. **Please Note**: Prevailing wage is required on **all** State projects on this contract. Therefore, hourly rates are based upon the contractor paying prevailing wage rates.

3. During this contract, projects may utilize a combination of Carpenters and Laborers. This combination will be mutually decided between the State and the contractor.

Note: There shall be no inside delivery charges on orders that included INSTALLATION since unloading the furniture is a part of the installation process.

First Level % for Install Services		Total Bid for Furniture From the Standard Item listing		Total Amount for INSTALL SERVICES
13.1%	**X**	**$17,186.80**	**=**	**$2,251.47**

First Level % for Install Services		Total Bid for Furniture from the Express Item listing		Total Amount for INSTALL SERVICES
13.1%	**X**	**$21,006.08**	**=**	**$2,751.80**

Hourly Rate For Second Level		Time Study/Mock-Up		Total Amount for INSTALL SERVICES
$58.50	**X**	**20.20 hours** (Actual hours from 2nd mock-up)	**=**	**$1,181.70**
Hourly Rate For Third Level		Time Study/Mock-Up		Total Amount for INSTALL SERVICES
$58.50	**X**	**22.6 hours**	**=**	**$1,322.10**

APPENDIX C
PRICING SHEETS

INSTALLATION CALCULATION SHEET (Continued) - DUAL AWARD

Hourly Rate For Fourth Level		Time Study/Mock-Up		Total Amount for INSTALL SERVICES
$58.50	**X**	**5.4 hours**	**=**	**$315.90**

Hourly Rate For Fifth Level		Time Study/Mock-Up		Total Amount for INSTALL SERVICES
$58.50	**X**	**22.6 hours**	**=**	**$1,322.10**

APPENDIX C
PRICING SHEETS

REFURBISH SERVICES CALCULATION SHEET- DUAL AWARD

Indicated below are the charges the state would incurr from the contractor to perform specified services relating to refurbishing exsting furniture. Costs for these services are estimated on the six-workstation cluster on the attached **Appendix F** - "Workstation Cluster. The hourly rate per level of service is multiplied by the hours from the time study for the services indicated below.

Hourly Rate for Clean Service		Time Study		Total Amount for SERVICE
$58.50	x	8.5 Hours	=	$497.25

Hourly Rate for Re-Fabric Service		Time Study		Total Amount for SERVICE
$35.00	x	48 Hours	=	$1,680.00

Hourly Rate for Re-laminate Service		Time Study		Total Amount for SERVICE
$35.00	x	18.5 Hours	=	$647.50
Hourly Rate for Re-Paint Service		Time Study		Total Amount for SERVICE
$35.00	x	48.5 Hours	=	$1,697.50

Hourly Rate Re-fabric, clean Service		Time Study		Total Amount for SERVICE
$35.00	x	51 Hours	=	$1,785.00

Hourly Rate Re-fabric, , Re-laminate, clean Service		Time Study		Total Amount for SERVICE
$35.00	x	69.5 Hours	=	$2,432.50

Hourly Rate Re-fabric, , Re-laminate, re-paint, clean Service		Time Study		Total Amount for SERVICE
$35.00	x	115 Hours	=	$4,025.00

APPENDIX C
PRICING SHEETS

REFURBISHED LATERAL FILE PRICING SHEET- DUAL AWARD

Manufacturer: Haworth

Series Name: 950

The percentage (%) off list price by geographic area for each delivery option.

Delivery Option	Zone 1 Metro Region	Zone 2 University Region	Zone 3 S. W. Region	Zone 4 Bay Region	Zone 5 North Region	Zone 6 Superior Region
Drop-Ship	**75%**	**75%**	**75%**	**75%**	**70%**	**70%**
Inside Delivery	**72%**	**72%**	**72%**	**72%**	**67%**	**67%**
Delivered & Installed	**70%**	**70%**	**70%**	**70%**	**65%**	**65%**

The 1% Administrative Fee has been deducted and reflected in the discounts stated above.

The State of Michigan also plans to include several accessory items on this Contract, such as laminate tops, counter weights, posting shelves, additional dividers, hanging folder frames, half height drawers, and card tray inserts. Please note that these items may be included on the Contract based on the same discount indicated for each category of file cabinet in each zone.

REFURBISHED LATERAL FILE CABINETS ITEM LISTING

Indicated below are the charges required to deliver and install the items on the attached Lateral File Item Listing. This figure is first expressed as a dollar figure, taken from the Lateral File Pricing Sheet, the column that represents the Delivered and Installed for Zone 2 – University Region.

The date of the manufacturer's printed list price/catalog used to calculate the price for each item on the attached Item Listings.

Smart Office Systems
Remanufactured Haworth Lateral File Catalog

January 1, 2008

APPENDIX C
PRICING SHEETS

RE-FURBISHED LATERAL FILE CABINETS ITEM LISTING - DUAL AWARD

TYPE 2 - Lateral File Cabinet. Roll-out shelf, per the attached specifications.

Item	Unit	Commodity #	Description	Unit Price
1.			**30" width, Two openings high.**	
	Each	425-40-52-0501	Without lift-up receding doors; Without lock. With three (3) shelf dividers per opening.	$**199.50**
			Make: Haworth Model: HS-230-N-RO	
	Each	425-40-52-709	With lift-up receding doors; With lock. With three (3) shelf dividers per opening.	**$199.50**
			Make: Haworth Model:HS-230-RD-RO	
2.			**36" width; Four openings high.**	
	Each	425-40-52-2408	With lift-up receding doors; Without lock. With three (3) shelf dividers per opening.	**$383.40**
			Make: Haworth Model: HS-436-N-RD-RO	
	Each	425-40-52-2507	With lift-up receding doors; With lock. With three (3) shelf dividers per opening.	**$383.40**
			Make: Haworth Model: HS-436-RD-RO	
3.			**42" width; Five openings high.**	
	Each	425-40-52-4008	With lift-up receding doors; Without lock. With three (3) shelf dividers per opening.	**$519.00**
			Make: Haworth Model: HS-542-N-RD-RO	
	Each	425-40-52-4008	With lift-up receding doors; With lock. With three (3) shelf dividers per opening.	**$519.00**
			Make: Haworth Model: HS-542-N-RD-RO	

TYPE 3 Lateral File Cabinet. Roll-out drawer (fixed front), per the attached specifications.

Item	Unit	Commodity #	Description	Unit Price
4.			**30" width. Two openings high.**	**$199.50**
	Each		Without lock.	
		425-40-53-0500	With three (3) shelf dividers per opening.	
			Make: Haworth Model: HS-230-N-RODF	
	Each		With lock.	**$199.50**
		425-40-53-0609	With three (3) shelf dividers per opening.	
			Make: Haworth Model: HS-230-N-RODF	
5.			**36" width. Four openings high.**	**$383.40**
	Each		Without lock.	
		425-40-53-1706	With three (3) shelf dividers per opening.	
			Make: Haworth Model: HS-436-N-RODF	
	Each		With lock.	**$383.40**
		425-40-53-1805	With three (3) shelf dividers per opening.	
			Make: Haworth Model: HS-436-N-RODF	
6.			**42" width. Five openings high. Top opening shall be a roll-out shelf with lift-up receding door**	
	Each		Without lock.	**$519.00**
		425-40-53-2704	With three (3) shelf dividers per opening.	
			Make: Haworth Model: HS-542-N-RD-RO	
	Each		With lock.	**$519.00**
		425-40-53-2803	With three (3) shelf dividers per opening.	
			Make: Haworth Model: HS-542-N-RD-RO	

ITEM LISTING

Alternate Supplemental Refurbished Pedestal Files

Part Number	Description	List Price	Standard Delivery Net Price	Express Delivery Net Price	Rapid Response Net Price	Comparable Haworth Part #
	Pedestals					
PS2911	NS-Pedestal, Box/Box/File, 20"	$859	$178.67	$216.47	$244.82	PDX-20-HLN
PS3011	NS-Pedestal, Box/Box/File, 24"	$889	$184.91	$215.14	$253.37	PDX-24-HLN
PS3111	NS-Pedestal, Box/Box/File, 30"	$993	$206.54	$240.31	$283.01	PDX-30-HLN
PS2909	NS-Pedestal, File/File, 20"	$717	$149.14	$173.51	$204.35	PDX-20-JLN
PS3009	NS-Pedestal, File/File, 24"	$747	$155.38	$180.77	$212.90	PDX-24-JLN
PS3109	NS-Pedestal, File/File, 30"	$791	$164.53	$191.42	$225.44	PDX-30-JLN
PS0503	NS-Pedestal, Box/File, 20"	$504	$104.83	$121.97	$143.64	PDS-20-ALN
PS6111	NS-Pedestal, Box/Box/File, 20", Full Top	$950	$197.60	$229.9	$270.75	PDF-20-HLN
PS5111	NS-Pedestal, Box/Box/File, 24", Full Top	$977	$203.22	$236.43	$278.45	PDF-24-HLN
PS5311	NS-Pedestal, Box/Box/File, 30", Full Top	$1,016	$211.33	$245.87	$289.56	PDF-30-HLN
PS6109	NS-Pedestal, File/File, 20", Full Top	$829	$172.43	$200.62	$236.27	PDF-20-JLN
PS5109	NS-Pedestal, File/File, 24", Full Top	$856	$178.05	$207.15	$243.96	PDF-24-JLN
PS5309	NS-Pedestal, File/File, 30", Full Top	$895	$186.16	$216.59	$255.08	PDF-30-JLN
PS2011	NS-Pedestal, Box/Box/File, 20", Mobile	$1,133	$235.66	$274.19	$322.91	PDM-20-HLN
PS2111	NS-Pedestal, Box/Box/File, 24", Mobile	$1,163	$241.90	$281.45	$331.46	PDM-24-HLN
PS2211	NS-Pedestal, Box/Box/File, 30", Mobile	$1,212	$252.10	$293.3	$345.42	PDM-30-HLN
PS2009	NS-Pedestal, File/File, 20", Mobile	$987	$205.30	$238.85	$281.30	PDM-20-JLN
PS2109	NS-Pedestal, File/File, 24", Mobile	$1,017	$211.54	$246.11	$289.85	PDM-24-JLN
PS2209	NS-Pedestal, File/File, 30", Mobile	$1,066	$221.73	$257.97	$303.81	PDM-30-JLN
PS1403	NS-Pedestal, Box/File, 20", Mobile	$1,025	$213.20	$248.05	$292.13	N/A

APPENDIX C
PRICING SHEETS

ADDITIONAL INFORMATION SHEET

Indicated below is the project coordination charge (see **PROJECT COORDINATION** Statement in the attached terms and conditions). This project coordination charge is expressed as a dollar amount per hour:

$48.00 per hour

Warranty levels:

Please refer to the Warranty located in Appendix O.

All of the above warranties MUST also include labor costs.

Cost for **storage per square foot per day** beyond seven (7) calendar days after the agreed upon delivery date.

$0.0183 per foot per day

The person(s) responsible for administering this Contract:

NAME: **Tim Zemer**

TITLE: **Vice President**

PHONE: **517-492-7018**

E-MAIL: **tzemer@smartofficesystems.com**

Indicated below is the address where orders shall be placed. Agencies can call the contact below with general questions about orders already place, scheduled ship dates, etc.:

Smart Office Systems (company name)

2110 S. Washington Ave. Lansing, MI 48910 (address)

Tim Zemer (contact person)

517-492-7018 (telephone number)

APPENDIX D

FOR THE AGENCY BUYER LIST

CLICK ON THE LINK BELOW:
HTTP://WWW.MICHIGAN.GOV/BUYMICHIGANFIRST

SELECT: CONTACT US
SELECT: Other Executive Agencies' Buyer List

Appendix E
State of Michigan
Zone Map

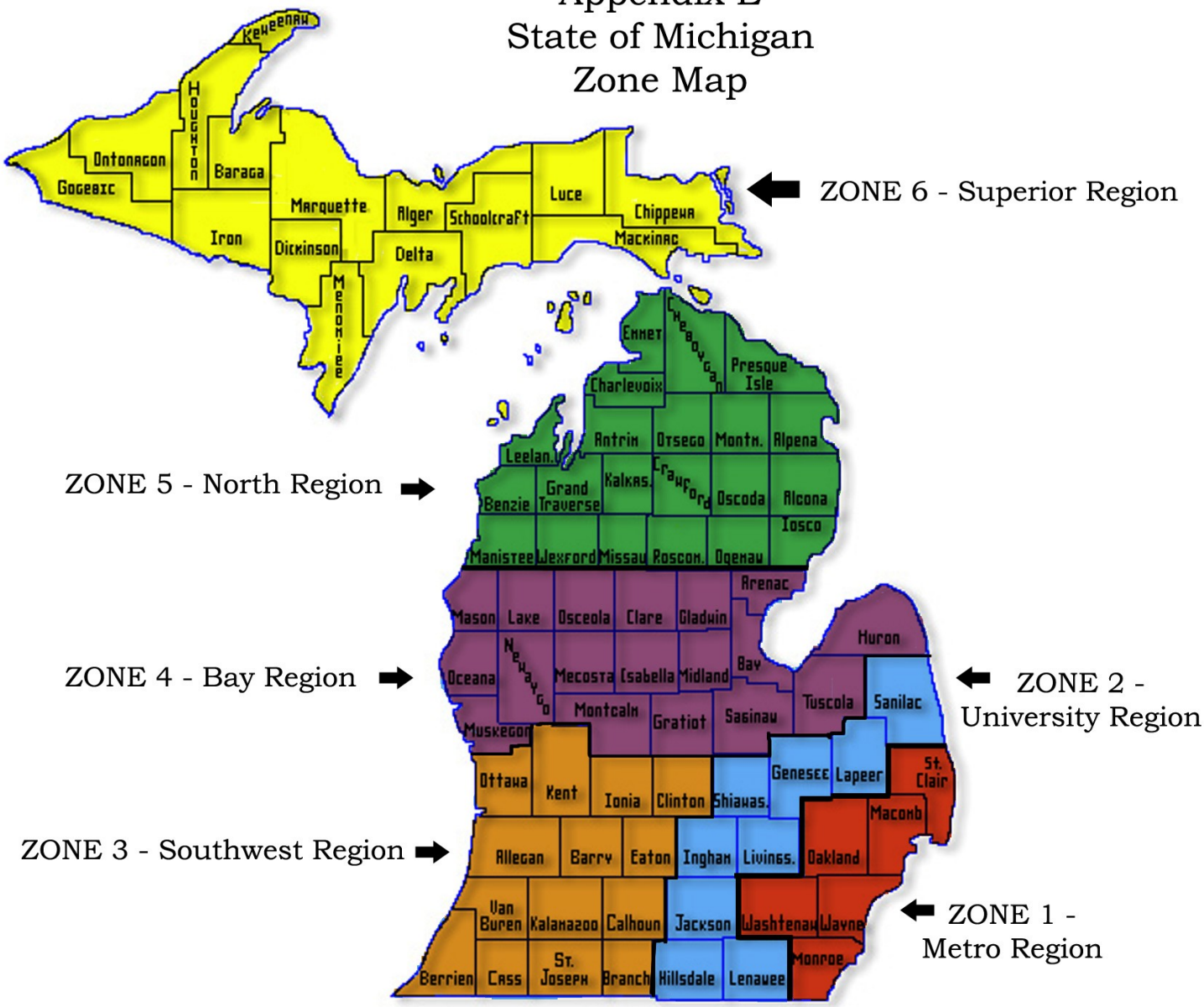

APPENDIX F
SIX (6) WORKSTATION CLUSTER

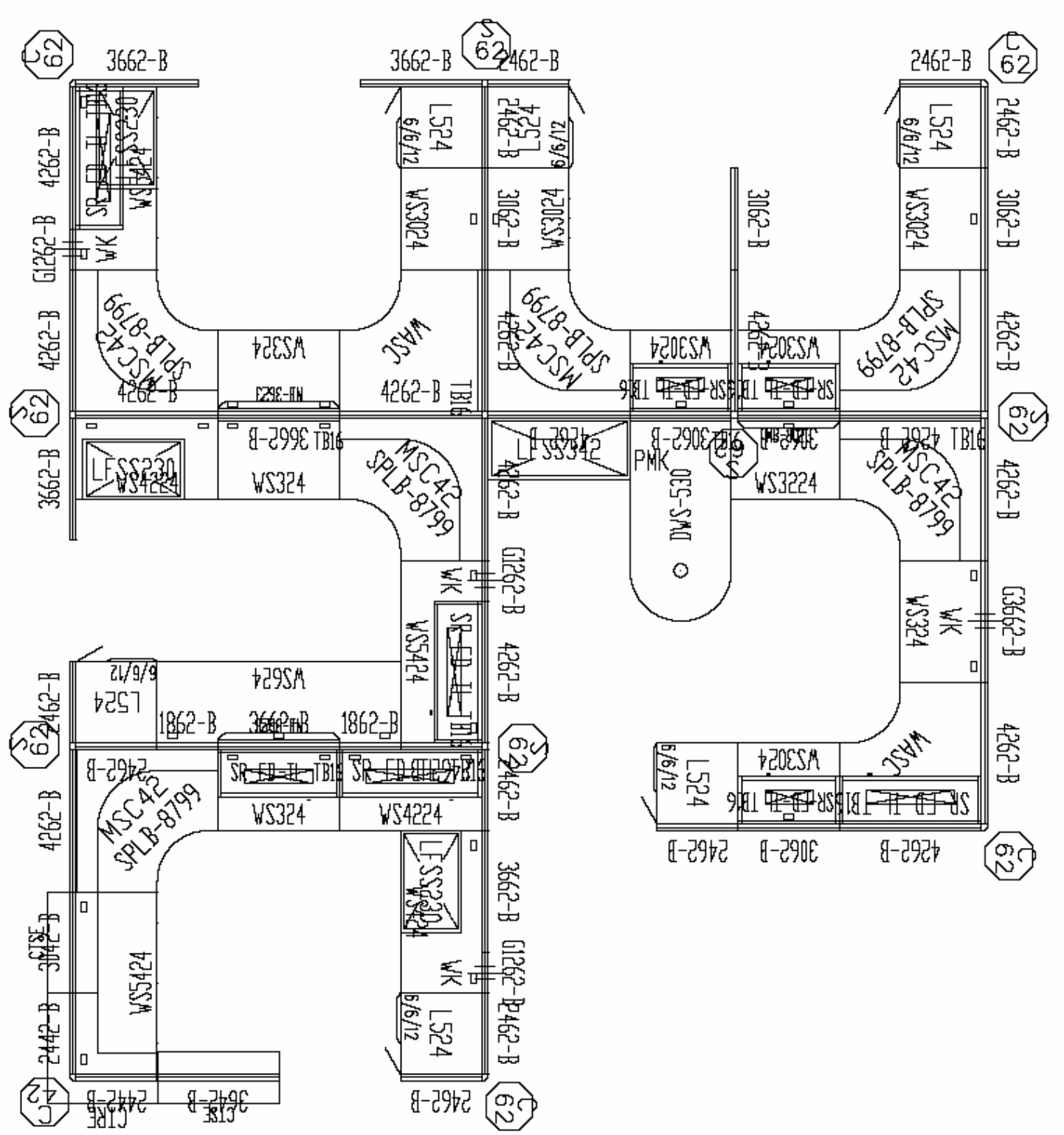

APPENDIX G

STATE OF MICHIGAN

JENNIFER M. GRANHOLM
GOVERNOR

DEPARTMENT OF LABOR & ECONOMIC GROWTH
LANSING

KEITH W. COOLEY
DIRECTOR

REQUIREMENTS OF THE PREVAILING WAGES ON STATE PROJECTS ACT, PUBLIC ACT 166 OF 1965

The Michigan Department of Labor & Economic Growth determines prevailing rates pursuant to the Prevailing Wages on State Projects Act, Public Act 166 of 1965, as amended. The purpose of establishing prevailing rates is to provide minimum rates of pay that must be paid to workers on construction projects for which the State or a school district is the contracting agent and which is financed or financially supported by the State. By law, prevailing rates are compiled from the rates contained in collectively bargained agreements which cover the locations of the State projects. The attached prevailing rates provide an hourly rate which includes wage and fringe benefit totals for designated construction mechanic classifications. The overtime rates also include wage and fringe benefit totals. Please pay special attention to the overtime and premium pay requirements. Prevailing wage is satisfied when wages plus fringe benefits paid to a worker are equal to or greater than the required rate.

State of Michigan responsibilities under the law:

- The department establishes the prevailing rate for each classification of construction mechanic ***requested by a contracting agent*** prior to contracts being let out for bid on a State project.

Contracting agent responsibilities under the law:

- If a contract is not awarded or construction does not start within 90 days of the date of the issuance of rates, a re-determination of rates must be requested by the contracting agent.
- Rates for classifications needed but not provided on the Prevailing Rate Schedule, including rates for registered apprentices, ***must*** be obtained ***prior*** to contracts being let out for bid on a State project.
- The contracting agent, by written notice to the contractor and the sureties of the contractor known to the contracting agent, may terminate the contractor's right to proceed with that part of the contract, for which less than the prevailing rates of wages and fringe benefits have been or will be paid, and may proceed to complete the contract by separate agreement with another contractor or otherwise, and the original contractor and his sureties shall be liable to the contracting agent for any excess costs occasioned thereby.

Contractor responsibilities under the law:

- Every contractor and subcontractor shall keep posted on the construction site, in a conspicuous place, a copy of all prevailing wage and fringe benefit rates prescribed in a contract.
- Every contractor and subcontractor shall keep an accurate record showing the name and occupation of and the actual wages and benefits paid to each construction mechanic employed by him in connection with said contract. This record shall be available for reasonable inspection by the contracting agent or the department.
- Each contractor or subcontractor is separately liable for the payment of the prevailing rate to its employees.
- The prime contractor is responsible for advising all subcontractors of the requirement to pay the prevailing rate prior to commencement of work.
- The prime contractor is secondarily liable for payment of prevailing rates that are not paid by a subcontractor.
- A construction mechanic shall only be paid the apprentice rate if registered with the United States Department of Labor, Bureau of Apprenticeship and Training and the rate is included in the contract.

Enforcement:

A person who has information of an alleged prevailing wage violation on a State project may file a complaint with the Wage & Hour Division. The department will investigate and attempt to resolve the complaint informally. During the course of an investigation, if the requested records and posting certification are not made available in compliance with Section 5 of Act 166, the investigation will be concluded and a referral to the Office of Prosecuting Attorney for criminal action under Section 7 and/or the Office of Attorney General for civil action will be made. The Office of Attorney General will pursue costs and fees associated with a lawsuit if filing is necessary to obtain records.

A violation of Act 166 may result in the contractor's name being added to the Prevailing Wage Act Violators List published on the division's website, updated monthly. This list includes the names and addresses of contractors and

subcontractors the division has found in violation of Act 166 based on complaints from individuals and third parties. The Prevailing Wage Act Violators List is intended to inform contracting agents of contractors that have violated Act 166 for use in determining who should receive State-funded projects.

WAGE & HOUR DIVISION
P.O. BOX 30476 • LANSING, MICHIGAN 48909-7976
www.michigan.gov/wagehour • (517) 335-0400 • FAX (517) 335-0077

Cover Letter_effective_effective61307.doc

APPENDIX H
OVERTIME PROVISIONS FOR MICHIGAN PREVAILING WAGE RATE SCHEDULE

MICHIGAN DEPARTMENT OF LABOR & ECONOMIC GROWTH
WAGE & HOUR DIVISION

OVERTIME PROVISIONS for MICHIGAN PREVAILING WAGE RATE SCHEDULE

1. Overtime is represented as a nine character code. Each character represents a certain period of time after the first 8 hours Monday thru Friday.

	Monday thru Friday	Saturday	Sunday & Holidays
First 8 Hours		4	8
9th Hour	1	5	
10th Hour	2	6	
Over 10 hours	3	7	

Overtime for Monday thru Friday after 8 hours:
the 1st character is for time worked in the 9th hour *(8.1 - 9 hours)*
the 2nd character is for time worked in the 10th hour *(9.1 - 10 hours)*
the 3rd character is for time worked beyond the 10th hour *(10.1 and beyond)*

Overtime on Saturday:
the 4th character is for time worked in the first 8 hours on Saturday *(0 - 8 hours)*
the 5th character is for time worked in the 9th hour on Saturday *(8.1 - 9 hours)*
the 6th character is for time worked in the 10th hour *(9.1 - 10 hours)*
the 7th character is for time worked beyond the 10th hour *(10.01 and beyond)*

Overtime on Sundays & Holidays
The 8th character is for time worked on Sunday or on a holiday

The last character indicates if an optional 4-day 10-hour per day workweek can be worked without paying overtime after 8 hours worked.

2. Overtime Indicators Used in the Overtime Provision:

H - means TIME AND ONE-HALF due
X - means TIME AND ONE-HALF due after 40 HOURS worked
D - means DOUBLE PAY due
Y - means YES an optional 4-day 10-hour per day workweek can be worked without paying overtime after 8 hours worked
N - means NO an optional 4-day 10-hour per day workweek *can not* be worked without paying overtime after 8 hours worked

3. EXAMPLES:

HHHHHHHDN - This example shows that the 1½ rate must be used for time worked after 8 hours Monday thru Friday *(characters 1 - 3);* for all hours worked on Saturday, 1½ rate is due *(characters 4 - 7).* Work done on Sundays or holidays must be paid double time *(character 8).* The N *(character 9)* indicates that 4 ten-hour days is not an acceptable workweek at regular pay.

XXXHHHHDY - This example shows that the 1½ rate must be used for time worked after 40 hours are worked Monday thru Friday *(characters 1-3);* for hours worked on Saturday, 1½ rate is due *(characters 4 – 7).* Work done on Sundays or holidays must be paid double time *(character 8).* The Y *(character 9)* indicates that 4 ten-hour days is an acceptable alternative workweek. (REV 05/07/04)

APPENDIX H

JENNIFER M. GRANHOLM
GOVERNOR

Michigan Department of Labor & Economic Growth
Wage & Hour Division
PO Box 30476
Lansing , MI 48909-7976
517.335.0400
www.michigan.gov/wagehour

KEITH W. COOLEY
DIRECTOR

Informational Sheet: Prevailing Wages on State Projects
General Information Regarding Fringe Benefits

Certain fringe benefits **may** be credited toward the payment of the Prevailing Wage Rate:

- If a fringe benefit is paid directly to a construction mechanic
- If a fringe benefit contribution or payment is made on behalf of a construction mechanic
- If a fringe benefit, which may be provided to a construction mechanic, is pursuant to a written contract or policy
- If a fringe benefit is paid into a fund, for a construction mechanic

When a fringe benefit is not paid by an hourly rate, the hourly credit will be calculated based on the annual value of the fringe benefit divided by 2080 hours per year (52 weeks @ 40 hours per week).

The following is an example of the types of fringe benefits allowed and how an hourly credit is calculated:

Vacation	40 hours X $14.00 per hour = $560/2080 =	$.27
Dental insurance	$31.07 monthly premium X 12 mos. = $372.84 /2080 =	$.18
Vision insurance	$5.38 monthly premium X 12 mos. = $64.56/2080 =	$.03
Health insurance	$230.00 monthly premium X 12 mos. = $2,760.00/2080 =	$1.33
Life insurance	$27.04 monthly premium X 12 mos. = $324.48/2080 =	$.16
Tuition	$500.00 annual cost/2080 =	$.24
Bonus	4 quarterly bonus/year x $250 = $1000.00/2080 =	$.48
401k Employer Contribution	$2000.00 total annual contribution/2080 =	$.96
Total Hourly Credit		$3.65

Other examples of the types of fringe benefits allowed:

- Sick pay
- Holiday pay
- Accidental Death & Dismemberment insurance premiums

The following are examples of items that **will not** be credited toward the payment of the Prevailing Wage Rate

- Legally required payments, such as:
  - Unemployment Insurance payments
  - Workers' Compensation Insurance payments
  - FICA (Social Security contributions, Medicare contributions)
- Reimbursable expenses, such as:
  - Clothing allowance or reimbursement
  - Uniform allowance or reimbursement
  - Gas allowance or reimbursement
  - Travel time or payment
  - Meals or lodging allowance or reimbursement
  - Per diem allowance or payment
- Other payments to or on behalf of a construction mechanic that are not wages or fringe benefits, such as:
  - Industry advancement funds
  - Financial or material loans

WHD-9917 Rev. 08/30/2007 Page 1 of 1

APPENDIX I
OFFICIAL 2008 PREVAILING WAGE RATES

State of Michigan
Department of Labor and Economic Growth

Wage and Hour Division
6546 Mercantile Way, Suite 5
PO Box 30476
Lansing, MI 48909-7976
Telephone: 517-335-0400
TTY: 517-373-7489
Fax: 517-335-0077
www.michigan.gov/wagehour

Official Request #: 010208
Requestor: Mich Dept of Management & Budget
Project Description: Re-furbished Open Space Furniture Bid
Project Number: #071I6200036

Official 2008 Prevailing Wage Rates for State Funded Projects

Carpenter, Electrician, Laborer

Issue Date: 1/2/2008
Contract must be awarded by: 4/1/2008
Page 1 of 33

Classification Name	Classification Description	Classification Number	Prevailing Wage Rates: Straight Hourly	Time and a Half	Double time	Overtime Provision
Carpenter		CA-100	$32.60	$44.24	$55.88	H H H X H H H D N
Carpenter						
	Apprentice Rates:					
	1st year		$18.96	$24.61	$30.26	
	2nd year		$21.69	$28.47	$35.25	
	3rd year		$25.78	$34.25	$42.73	
	4th year		$28.51	$38.12	$47.72	

Rate Applies To The Following

Allegan, Barry, Kent, Lake, Mason, Mecosta, Montcalm, Muskegon, Newaygo, Oceana, Osceola, Ottawa

Carpenter		CA1004FL	$31.02	$41.92	$52.82	H H H H H H H D Y
Floor layer						
	Apprentice Rates:					
	1st Year		$22.30	$28.84	$35.38	
	2nd Year		$24.48	$32.11	$39.74	
	3rd Year		$26.66	$35.38	$44.10	
	4th Year		$27.75	$37.02	$46.28	

Rate Applies To The Following

Clinton, Eaton, Ingham, Ionia, Jackson, Lenawee, Livingston
Livingston-- -The townships of Conway, Cochochtah, Handy, Howell, Iosco & Marion

Official Request #: 010208
Requestor: Mich Dept of Management & Budget
Project Description: Re-furbished Open Space Furniture Bid
Project Number: #071I6200036

Printed: 1/2/2008
Report: cle class selection

Official 2008 Prevailing Wage Rates for State Funded Projects

Carpenter, Electrician, Laborer

Issue Date: 1/2/2008

Contract must be awarded by: 4/1/2008

Page 2 of 33

Classification Name	Classification Description	Classification Number	Prevailing Wage Rates: Straight Hourly	Time and a Half	Double time	Overtime Provision
Carpenter		CA1004J	$34.67	$46.97	$59.27	H H H H H H H D Y
Carpenter & piledriver						
	Apprentice Rates:					
	1st Year		$24.83	$32.21	$39.59	
	2nd Year		$27.29	$35.90	$44.51	
	3rd Year		$29.75	$39.59	$49.43	
	4th Year		$30.98	$41.43	$51.89	

Rate Applies To The Following

Jackson Lenawee

Carpenter				CA1004L	$35.47	$48.17	$60.87	H H H H H H H D Y
Carpenter, piledriver								
	Apprentice Rates:							
	1st Year				$25.31	$32.93	$40.55	
	2nd Year				$27.85	$36.74	$45.63	
	3rd Year				$30.39	$40.55	$50.71	
	4th Year				$31.66	$42.45	$53.25	

Rate Applies To The Following

Clinton Eaton Ingham Ionia Livingston

Eaton-- -All Twps EXCEPT Bellevue, Kalamo, Vermontville, and Walton

Ionia-- -Twps of Danby, Orange, Portland, and Sebewa

Livingston-- -Twps of Conway, Cohoctah, Handy, Howell, Iosco, and Marion

Carpenter				CA-100FL	$26.76	$35.67	$44.57	H H H H H H H D N
Floor Layer								
	Apprentice Rates:							
	1st year				$17.85	$22.30	$26.75	
	2nd year				$20.53	$26.32	$32.11	
	3rd year				$22.31	$28.99	$35.67	
	4th year				$24.09	$31.66	$39.23	

Rate Applies To The Following

Allegan Barry Kent Lake Mason Mecosta Montcalm Muskegon
Newaygo Oceana Osceola Ottawa

Official Request #: 010208

Requestor: Mich Dept of Management & Budget

Project Description: Re-furbished Open Space Furniture Bid

Project Number: #071I6200036

Printed: 1/2/2008

Report: cle class selection

Official 2008 Prevailing Wage Rates for State Funded Projects

Carpenter, Electrician, Laborer

Issue Date: 1/2/2008

Contract must be awarded by: 4/1/2008

Page 3 of 33

Classification Name	Classification Description	Classification Number	Prevailing Wage Rates: Straight Hourly	Time and a Half	Double time	Overtime Provision
Carpenter		**CA1045**	**$40.22**	**$56.42**	**$72.61**	H H H H D D D D N
Carpet and Resilient Floor Layer, (does not include installation of prefabricated formica & parquet flooring which is to be paid carpenter rate)						
	Apprentice Rates:					
	1st 6 months		$20.93	$25.25	$31.05	
	2nd 6 months		$24.02	$31.26	$39.07	
	3rd 6 months		$25.64	$33.59	$42.17	
	4th 6 months		$27.26	$35.95	$45.33	
	5th 6 months		$28.87	$38.28	$48.43	
	6th 6 months		$30.50	$40.64	$51.57	
	7th 6 months		$32.11	$42.96	$54.67	
	8th 6 months		$33.73	$45.30	$57.79	

Rate Applies To The Following

Genesee, Lapeer, Livingston, Macomb, Monroe, Oakland, Sanilac, St. Clair, Washtenaw, Wayne

Livingston-- -All EXCEPT Twps of Conway, Cohochtah, Handy, Howell, Iosco, and Marion

Carpenter		**CA1510-C**	**$33.57**	**$45.48**	**$57.39**	H H D H H H D D Y
Carpenter, Drywall Taper & Finisher, & Floor Layer						
	Apprentice Rates:					
	1st 6 months		$26.08	$33.53	$40.97	
	2nd 6 months		$27.32	$35.39	$43.45	
	3rd 6 months		$28.56	$37.25	$45.93	
	4th 6 months		$29.80	$39.11	$48.41	
	5th 6 months		$31.05	$40.98	$50.91	
	6th 6 months		$32.29	$42.84	$53.39	
	7th 6 months		$33.53	$44.70	$55.87	
	8th 6 months		$34.77	$46.56	$58.35	

Rate Applies To The Following

Alger, Baraga, Chippewa, Delta, Dickinson, Gogebic, Houghton, Iron, Keweenaw, Luce, Mackinac, Marquette, Menominee, Ontonagon, Schoolcraft

Official Request #: 010208

Requestor: Mich Dept of Management & Budget

Project Description: Re-furbished Open Space Furniture Bid

Project Number: #071I6200036

Printed: 1/2/2008

Report: cle class selection

Official 2008 Prevailing Wage Rates for State Funded Projects

Carpenter, Electrician, Laborer

Issue Date: 1/2/2008

Contract must be awarded by: 4/1/2008

Classification Name	Classification Description	Classification Number	Prevailing Wage Rates: Straight Hourly	Time and a Half	Double time	Overtime Provision
Carpenter		CA1510-P	$33.77	$45.78	$57.79	H H D H H H D D Y
Piledriver						
	Apprentice Rates:					
	1st 6 months		$26.20	$33.71	$41.21	
	2nd 6 months		$27.45	$35.58	$43.71	
	3rd 6 months		$28.70	$37.45	$46.21	
	4th 6 months		$29.95	$39.33	$48.71	
	5th 6 months		$31.21	$41.22	$51.23	
	6th 6 months		$32.46	$43.09	$53.73	
	7th 6 months		$33.71	$44.97	$56.23	
	8th 6 months		$34.96	$46.85	$58.73	

Rate Applies To The Following

Alger	Baraga	Chippewa	Delta	Dickinson	Gogebic	Houghton	Iron
Keweenaw	Luce	Mackinac	Marquette	Menominee	Ontonagon	Schoolcraft	

Carpenter		CA202	$29.67	$40.34	$51.00	H H H H H H H D Y	
Carpenter and Floor Layer							
	Apprentice Rates:						
	1st year		$20.03	$25.38	$30.73		
	2nd year		$22.21	$28.62	$35.04		
	3rd year		$25.48	$33.50	$41.52		
	4th year		$27.66	$36.75	$45.84		

Rate Applies To The Following

Alcona	Alpena	Antrim	Benzie	Charlevoix	Cheboygan	Crawford	Emmet
Grand Traverse	Kalkaska	Leelanau	Manistee	Missaukee	Montmorency	Oscoda	Otsego
Presque Isle	Roscommon	Wexford					

Official Request #: 010208

Requestor: Mich Dept of Management & Budget

Project Description: Re-furbished Open Space Furniture Bid

Project Number: #071B6200036

Printed: 1/2/2008

Report: cle class selection

Official 2008 Prevailing Wage Rates for State Funded Projects

Carpenter, Electrician, Laborer

Issue Date: 1/2/2008

Contract must be awarded by: 4/1/2008

Page 5 of 33

Classification Name	Classification Description	Classification Number	Prevailing Wage Rates: Straight Hourly	Time and a Half	Double time	Overtime Provision
Carpenter Piledriver		CA202PD	$30.32	$41.30	$52.28	H H H H H H H D Y
	Apprentice Rates:					
	1st Year		$20.35	$25.86	$31.36	
	2nd Year		$22.59	$29.20	$35.80	
	3rd Year		$25.97	$34.23	$42.49	
	4th Year		$28.21	$37.57	$46.93	

Rate Applies To The Following

Alcona	Alpena	Antrim	Benzie	Charlevoix	Cheboygan	Crawford	Emmet
Grand Traverse	Kalkaska	Leelanau	Manistee	Missaukee	Montmorency	Oscoda	Otsego
Presque Isle	Roscommon	Wexford					

Carpenter Carpenter & Piledriver		CA-525	$32.15	$43.93	$55.71	H H H H H H H D N
	Apprentice Rates:					
	1st year		$19.39	$25.28	$31.17	
	2nd year		$22.22	$29.29	$36.36	
	3rd year		$26.47	$35.31	$44.15	
	4th year		$29.29	$39.30	$49.32	

Rate Applies To The Following

Berrien	Branch	Calhoun	Cass	Eaton	Hillsdale	Ionia	Kalamazoo
St. Joseph	Van Buren						

Eaton-- -the townships of Bellevue, Kalamo, Vermontvile & Walton only

Ionia-- -not included - townships of Danby, Orange, Portland & Sebawa

Carpenter Floor Layer		CA-525-FL	$25.76	$34.87	$43.97	H H H H H H H D N
	Apprentice Rates:					
	1st year		$17.85	$22.30	$26.75	
	2nd year		$20.53	$26.32	$32.11	
	3rd year		$22.31	$28.99	$35.67	
	4th year		$24.09	$31.66	$39.23	

Rate Applies To The Following

Berrien	Branch	Calhoun	Cass	Hillsdale	Kalamazoo	St. Joseph	Van Buren

Official Request #: 010208

Requestor: Mich Dept of Management & Budget

Project Description: Re-furbished Open Space Furniture Bid

Project Number: #071I6200036

Printed: 1/2/2008

Report: cle class selection

Official 2008 Prevailing Wage Rates for State Funded Projects

Carpenter, Electrician, Laborer

Issue Date: 1/2/2008

Contract must be awarded by: 4/1/2008

Classification Name	Classification Description	Classification Number	Prevailing Wage Rates: Straight Hourly	Time and a Half	Double time	Overtime Provision
Carpenter		CA687Z1	$44.37	$62.97	$81.56	H H D H D D D D Y
Carpenter, piledriver						
	Apprentice Rates:					
	1st Year		$27.63	$37.85	$48.08	
	3rd 6 months		$29.49	$40.65	$51.80	
	4th 6 months		$31.34	$43.42	$55.50	
	5th 6 months		$33.21	$46.23	$59.24	
	6th 6 months		$35.08	$49.03	$62.98	
	7th 6 months		$36.92	$51.79	$66.66	
	8th 6 months		$38.80	$54.61	$70.42	

Rate Applies To The Following

Macomb Monroe Oakland St. Clair Wayne

Carpenter		CA687Z2	$43.87	$62.21	$80.55	H H D H D D D D Y
Carpenter, piledriver						
	Apprentice Rates:					
	1st year		$27.36	$37.45	$47.54	
	3rd 6 months		$29.20	$40.21	$51.22	
	4th 6 months		$31.02	$42.94	$54.86	
	5th 6 months		$32.86	$45.70	$58.54	
	6th 6 months		$34.69	$48.45	$62.20	
	7th 6 months		$36.53	$51.21	$65.88	
	8th 6 months		$38.37	$53.97	$69.56	

Rate Applies To The Following

Livingston Sanilac Washtenaw

Livingston-- -Twps of Brighton, Deerfield, Genoa, Green Oak, Hamburg, Hartland, Osceola, Putnam, Tyrone, and Unadilla

Carpenter		CA706F	$35.85	$48.65	$61.44	H H H H H H H D Y
Carpenter, Floor layer, Acoustical Ceiling Tile Erector, Piledriver						
	Apprentice Rates:					
	1st year		$24.78	$31.19	$37.60	
	2nd year		$29.91	$38.88	$47.86	
	3rd year		$31.19	$40.80	$50.42	
	4th year		$33.75	$44.64	$55.54	

Rate Applies To The Following

Genesee Lapeer Shiawassee

Official Request #: 010208

Requestor: Mich Dept of Management & Budget

Project Description: Re-furbished Open Space Furniture Bid

Project Number: #071I6200036

Printed: 1/2/2008

Report: cle class selection

Official 2008 Prevailing Wage Rates for State Funded Projects

Carpenter, Electrician, Laborer

Issue Date: 1/2/2008

Contract must be awarded by: 4/1/2008

Page 7 of 33

Classification Name	Classification Description	Classification Number	Prevailing Wage Rates: Straight Hourly	Time and a Half	Double time	Overtime Provision
Carpenter		CA706Z4-CA	$35.25	$47.76	$60.27	H H H H H H H D Y
Carpenter, floor layer, acoustical ceiling tile erector, piledriver						
	Apprentice Rates:					
	1st year		$24.46	$30.73	$37.00	
	2nd year		$29.48	$38.26	$47.04	
	3rd year		$30.73	$40.14	$49.54	
	4th year		$33.24	$43.90	$54.56	

Rate Applies To The Following

Arenac	Bay	Clare	Gladwin	Gratiot	Huron	Iosco	Isabella
Midland	Ogemaw	Saginaw	Tuscola				

Electrician		EC-1070-A85	$42.55	$56.85	$71.15	H H H H D D D D Y
Inside wireman for work above $85,000						
	Apprentice Rates:					
	1st period		$25.77	$32.92	$40.07	
	2nd period		$28.63	$37.21	$45.79	
	3rd period		$31.49	$41.51	$51.51	
	4th period		$36.83	$48.27	$59.71	
	5th period		$38.27	$50.43	$62.59	
	6th period		$39.69	$52.56	$65.43	

Rate Applies To The Following

Alger	Chippewa	Luce	Mackinac	Marquette

Electrician		EC-1070-B85	$40.47	$53.73	$66.99	H H H H D D D D Y
Inside wireman for work below $85,000						
	Apprentice Rates:					
	1st period		$24.73	$31.36	$37.99	
	2nd period		$27.38	$35.34	$43.29	
	3rd period		$30.03	$39.32	$48.59	
	4th period		$35.17	$45.78	$56.39	
	5th period		$36.50	$47.78	$59.05	
	6th period		$37.82	$49.75	$61.69	

Rate Applies To The Following

Alger	Chippewa	Luce	Mackinac	Marquette

Official Request #: 010208

Requestor: Mich Dept of Management & Budget

Project Description: Re-furbished Open Space Furniture Bid

Project Number: #071I6200036

Printed: 1/2/2008

Report: cle class selection

Official 2008 Prevailing Wage Rates for State Funded Projects

Carpenter, Electrician, Laborer

Issue Date: 1/2/2008

Contract must be awarded by: 4/1/2008

Classification Name	Classification Description	Classification Number	Prevailing Wage Rates: Straight Hourly	Time and a Half	Double time	Overtime Provision
Electrician		**EC-131-IW**	**$37.72**	**$54.02**	**$70.32**	H H H H H H H D Y
Inside Wireman						
	Apprentice Rates:					
	0-1000 hours		$16.40	$22.18	$27.95	
	1000-2000 hours		$17.83	$24.32	$30.81	
	2000-3500 hours		$21.15	$29.17	$37.18	
	3500-5000 hours		$22.59	$31.32	$40.06	
	5000-6500 hours		$25.51	$35.71	$45.90	
	6500-8000 hours		$28.42	$40.07	$51.72	

Rate Applies To The Following

Allegan Barry Kalamazoo St. Joseph Van Buren

Allegan-- -Townships of Saugatuck, Manlius, Heath, Monterey, Lee, Clyde, Hopkins, Wayland, Ganges, Valley, Allegan, Watson, Martin, Casco, Otsego, Cheshire, Trowbridge and Gunplain ONLY

Barry-- -Townships of Barry, Yankee Springs, Rutland, Orangeville, Hope and Prairieville ONLY

Electrician		**EC-153-IW**	**$43.17**	**$58.02**	**$72.87**	H H H H H H H D Y
Inside Wireman						
	Apprentice Rates:					
	0-1000 hours		$18.36	$24.31	$30.24	
	1000-2000 hours		$19.84	$26.53	$33.20	
	2000-3500 hours		$28.24	$36.41	$44.58	
	3500-5000 hours		$31.56	$41.21	$50.86	
	5000-6500 hours		$34.87	$46.01	$57.14	
	6500-8000 hours		$38.20	$50.82	$63.45	

Rate Applies To The Following

Berrien Cass

Electrician		**EC-219-ZA-a**	**$41.33**	**$55.20**	**$69.06**	H H H H H H H D Y
Inside wireman for work above $130,000 total value						
	Apprentice Rates:					
	0-1,000 hours		$21.33	$27.57	$33.81	
	1,000-2,000 hours		$24.96	$31.89	$38.82	
	2,000 - 3,500 hours		$27.74	$36.06	$44.38	
	3,500-5,000 hours		$30.51	$40.21	$49.92	
	5,000 - 6,500 hours		$33.28	$44.37	$55.46	
	6,500 - 8,000 hours		$36.06	$48.54	$61.02	

Rate Applies To The Following

Dickinson Iron

Official Request #: 010208

Requestor: Mich Dept of Management & Budget

Project Description: Re-furbished Open Space Furniture Bid

Project Number: #071I6200036

Printed: 1/2/2008

Report: cle class selection

Official 2008 Prevailing Wage Rates for State Funded Projects

Carpenter, Electrician, Laborer

Issue Date: 1/2/2008

Contract must be awarded by: 4/1/2008

Classification Name	Classification Description	Classification Number	Prevailing Wage Rates: Straight Hourly	Time and a Half	Double time	Overtime Provision
Electrician		EC-219-ZA-b	$39.04	$51.77	$64.49	H H H H H H H D Y
Inside wireman for work below 130,000 total value.						
	Apprentice Rates:					
	0 - 1,000 hours		$20.30	$26.03	$31.75	
	1,000 - 2 000 hours		$23.82	$30.18	$36.54	
	2,000 - 3,500 hours		$26.37	$34.01	$41.64	
	3,500 - 5,000 hours		$28.91	$37.82	$46.72	
	5,000 - 6,500 hours		$31.46	$41.64	$51.82	
	6,500 - 8,000 hours		$34.01	$46.79	$58.68	
Rate Applies To The Following						
Dickinson Iron						
Electrician		EC-219-ZB-a	$41.33	$55.20	$69.06	H H H H H H H D Y
Inside wireman for work above $130,000 total value.						
	Apprentice Rates:					
	6,500-8,000 hours		$36.06	$48.54	$61.02	
	0-1,000 hours		$21.33	$27.57	$33.81	
	1,000-2,000 hours		$24.96	$31.89	$38.82	
	2,000-3,500 hours		$27.74	$36.06	$44.38	
	3,500-5,000 hours		$30.51	$40.21	$49.92	
	5,000-6,500 hours		$33.28	$44.37	$55.46	
Rate Applies To The Following						
Baraga Gogebic Houghton Keweenaw Ontonagon						
Electrician		EC-219-ZB-b	$36.78	$48.37	$59.96	H H H H H H H D Y
Inside wireman for work below $130,000 total value.						
	Apprentice Rates:					
	0-1,000 hours		$19.28	$24.50	$29.71	
	1,000-2,000 hours		$22.69	$28.49	$34.28	
	2,000-3,500 hours		$25.00	$31.95	$38.90	
	3,500-5,000 hours		$27.33	$35.45	$43.56	
	5,000-6,500 hours		$29.64	$38.91	$48.18	
	6,500-8,000 hours		$31.96	$42.39	$52.82	
Rate Applies To The Following						
Baraga Gogebic Houghton Keweenaw Ontonagon						

Official Request #: 010208

Requestor: Mich Dept of Management & Budget

Project Description: Re-furbished Open Space Furniture Bid

Project Number: #071I6200036

Printed: 1/2/2008

Report: cle class selection

Official 2008 Prevailing Wage Rates for State Funded Projects

Carpenter, Electrician, Laborer

Issue Date: 1/2/2008

Contract must be awarded by: 4/1/2008

Classification Name	Classification Description	Classification Number	Prevailing Wage Rates: Straight Hourly	Time and a Half	Double time	Overtime Provision
Electrician		EC-252-IW	$52.79	$72.84	$92.88	H H D H D D D D N
Inside wireman						
	Apprentice Rates:					
	1st Period		$28.21	$35.97	$43.72	
	2nd Period		$32.74	$42.76	$52.78	
	3rd Period		$36.76	$48.80	$60.82	
	4th Period		$40.76	$54.79	$68.82	
	5th Period		$44.77	$60.81	$76.84	
	6th Period		$48.79	$66.84	$84.88	

Rate Applies To The Following

Ingham Jackson Livingston Washtenaw

Ingham-- -Townships of Onondaga, Leslie, Stockbridge and Bunker Hill ONLY.

Livingston-- -Townships of Unadilla, Putnam, Hamburg, and Green Oak ONLY.

Electrician	EC-275-IW	$38.88	$55.10	$71.32	H H H H H H H D Y
Inside Wireman					
	Apprentice Rates:				
	0-1000 hours	$16.63	$21.98	$27.32	
	1000-2000 hours	$17.97	$23.99	$30.00	
	2000-3500 hours	$20.82	$28.38	$35.95	
	3500-5000 hours	$22.20	$30.46	$38.71	
	5000-6500 hours	$25.31	$35.12	$44.93	
	6500-8000 hours	$32.12	$44.86	$57.60	

Rate Applies To The Following

Allegan Barry Ionia Isabella Kent Lake Mason Mecosta
Montcalm Muskegon Newaygo Oceana Osceola Ottawa

Allegan-- -Laketon, Fillmore, Overisel, Salem, Dorr & Leighton townships

Barry-- -Thornapple & Irving townships

Ionia-- -Otisco, Orleans, Ronald, N Plains, Keene, Easton, Ionia, Lyons, Boston, Berlin, Campbell & Odessa townships

Isabella-- -Coldwater, Gilmore, Sherman, Nottawa, Bloomfield, Deerfield, Rolland, & Fremont townships

Lake-- -Sweetwater, Webber, Cherry Valley, Pinora Lake, Yates, Pleasant Plains & Chase townships

Mason-- -Victory, Sherman, Sheridan, Hamlin, Amber, Pere Marquette, Custer, Branch, Summit, Riverton, Eden, & Logan townships

Osceola-- -Richmond, Hersey, Evart, & Orient townships

Official Request #: 010208
Requestor: Mich Dept of Management & Budget
Project Description: Re-furbished Open Space Furniture Bid
Project Number: #071I6200036

Printed: 1/2/2008
Report: cle class selection

Official 2008 Prevailing Wage Rates for State Funded Projects

Carpenter, Electrician, Laborer

Issue Date: 1/2/2008

Contract must be awarded by: 4/1/2008

Classification Name	Classification Description	Classification Number	Prevailing Wage Rates: Straight Hourly	Time and a Half	Double time	Overtime Provision
Electrician		**EC-445-IW**	**$39.70**	**$54.17**	**$68.63**	H H H H H H H D N
Journeyman Wireman						
	Apprentice Rates:					
	0-1,000 hours		$18.26	$24.78	$31.29	
	1,001-2,000 hours		$19.70	$26.94	$34.17	
	2,001-2,750 hours		$25.48	$33.97	$42.45	
	2,751-3,500		$26.94	$35.63	$44.31	
	3,501-4,250 hours		$28.39	$37.80	$47.21	
	4,251-5,000 hours		$29.84	$39.98	$50.11	
	5,001-5,750 hours		$31.28	$42.14	$52.99	
	5,751-6,500 hours		$32.73	$44.31	$55.89	
	6,501-7,250 hours		$34.17	$46.47	$58.77	
	7,251-8,000 hours		$35.62	$48.65	$61.67	

Rate Applies To The Following

Barry Branch Calhoun Eaton

Barry-- -Townships of Carlton, Woodland, Hastings, Castleton, Baltimore, Maple Grove, Johnstown, and Assyria ONLY.

Eaton-- -Townships of Sunfield, Vermontville, Kalamo, Bellevue, Walton, and Brookfield ONLY.

Official Request #: 010208

Requestor: Mich Dept of Management & Budget

Project Description: Re-furbished Open Space Furniture Bid

Project Number: #071I6200036

Printed: 1/2/2008

Report: cle class selection

Official 2008 Prevailing Wage Rates for State Funded Projects

Carpenter, Electrician, Laborer

Issue Date: 1/2/2008

Contract must be awarded by: 4/1/2008

Classification Name	Classification Description	Classification Number	Prevailing Wage Rates: Straight Hourly	Time and a Half	Double time	Overtime Provision
Electrician Inside Wireman		EC-498-IW	$36.42	$51.42	$66.42	H H H H H H D D Y
	Apprentice Rates:					
	Period 1		$18.42	$24.42	$30.42	
	Period 2		$19.92	$26.67	$33.42	
	Period 3		$24.42	$33.42	$42.42	
	Period 4		$27.42	$37.92	$48.42	
	Period 5		$30.42	$42.42	$54.42	
	Period 6		$31.92	$44.67	$57.42	

Rate Applies To The Following

Antrim	Benzie	Charlevoix	Cheboygan	Clare	Crawford	Emmet	Grand Traverse
Kalkaska	Lake	Leelanau	Manistee	Mason	Missaukee	Osceola	Otsego
Roscommon	Wexford						

Cheboygan-- -Township of Mentor ONLY.

Clare-- -Townships of Winterfield, Summerfield, Redding, Greenwood, Freeman, Lincoln, Garfield, and Surrey ONLY.

Crawford-- -All Townships EXCEPT Lovells.

Emmet-- -All Townships EXCEPT Wawatam.

Lake-- -Townships of Elk, Eden, Newkirk, Dover, Ellsworth, Sauble, and Peacock ONLY.

Mason-- -Townships of Grant, Freesoil and Meade ONLY.

Osceola-- -All Townships EXCEPT Richmond, Hersey, Evart, and Orient.

Otsego-- -All Townships EXCEPT Dover, Chester and Charlton.

Roscommon-- -All Townships EXCEPT Roscommon, Backus and Nester.

Electrician Inside Wireman		EC-557-IW	$42.02	$59.72	$77.42	H H H H H H H D N
	Apprentice Rates:					
	1st Period		$19.27	$26.35	$33.42	
	2nd Period		$22.83	$31.69	$40.54	
	3rd Period		$26.72	$37.52	$48.32	
	4th Period		$30.60	$43.34	$56.08	
	5th Period		$34.50	$49.20	$63.88	
	6th Period		$38.75	$55.57	$72.38	

Rate Applies To The Following

Gratiot	Isabella	Midland	Saginaw	Tuscola

Gratiot-- -Townships of Seville, Pine River, Bethany, Wheeler, Sumner, Arcada, Ithaca, Emerson, LaFayette, New Haven, Newark, North Star, Hamilton, Washington and Elba ONLY.

Isabella-- -Townships of Lincoln and Coe ONLY.

Midland-- -Townships of Jasper, Porter, Mount Haley and Ingersol ONLY.

Tuscola-- -Gilford, Denmark, Tuscola, Arbela, Fairgrove, Juniata, Vassar, Columbia, Almer, Indianfields, Fremont, Watertown, Elmwood, Ellington, Wells, Dayton, Elkland, Novesta, Kingston, and Koylon ONLY.

Official Request #: 010208

Requestor: Mich Dept of Management & Budget

Project Description: Re-furbished Open Space Furniture Bid

Project Number: #071I6200036

Printed: 1/2/2008

Report: cle class selection

Official 2008 Prevailing Wage Rates for State Funded Projects

Carpenter, Electrician, Laborer

Issue Date: 1/2/2008

Contract must be awarded by: 4/1/2008

Classification Name	Classification Description	Classification Number	Prevailing Wage Rates: Straight Hourly	Time and a Half	Double time	Overtime Provision
Electrician Inside Wireman		EC-58-IW	$46.88	$64.00	$81.13	H H H H H H H D N
	Apprentice Rates:					
	0-1000 hours		$26.33	$33.18	$40.03	
	1000-2000 hours		$28.04	$35.75	$43.45	
	2000-3500 hours		$29.75	$38.31	$46.87	
	3500-5000 hours		$31.47	$40.90	$50.31	
	5000-6500 hours		$34.89	$46.03	$57.15	
	6500-8000 hours		$38.32	$51.17	$64.01	

Rate Applies To The Following

Huron Livingston Macomb Oakland Sanilac St. Clair Wayne

Livingston-- -Townships of Deerfield, Tyrone, Hartland, Oceola, Genoa and Brighton ONLY

Electrician Inside Wireman		EC-665-IW	$48.26	$64.72	$81.18	H H D H H H D D Y
	Apprentice Rates:					
	0-1000 hours		$27.79	$35.18	$42.60	
	1000-2000 hours		$29.44	$37.68	$45.90	
	2000-3500 hours		$31.08	$40.13	$49.17	
	3500-5000 hours		$34.38	$45.09	$55.78	
	5000-6500 hours		$37.67	$50.01	$62.35	
	6500-8000 hours		$40.96	$54.96	$68.94	

Rate Applies To The Following

Clinton Eaton Gratiot Ingham Ionia Livingston Shiawassee

Eaton-- -Roxand, Oneida, Delta, Chester, Benton, Windsor, Carmel, Eaton, Eaton Rapids & Hamlin townships

Gratiot-- -North Shade & Fulton townships

Ingham-- -Lansing, Meridian, Williamston, Locke, Delhi, Alaiedon, Wheatfield, Leroy, Aurelius, Vevay, Ingham, & White Oak townships

Ionia-- -Orange, Portland, Sebewa & Danby townships

Livingston-- -Conway, Cohoctah, Handy, Howell, Iosco & Marion townships

Shiawassee-- -Woodhull & Perry townships

Official Request #: 010208

Requestor: Mich Dept of Management & Budget

Project Description: Re-furbished Open Space Furniture Bid

Project Number: #071I6200036

Printed: 1/2/2008

Report: cle class selection

Official 2008 Prevailing Wage Rates for State Funded Projects

Carpenter, Electrician, Laborer

Issue Date: 1/2/2008

Contract must be awarded by: 4/1/2008

Classification Name	Classification Description	Classification Number	Prevailing Wage Rates: Straight Hourly	Time and a Half	Double time	Overtime Provision
Electrician		EC-692-IW-Z	$42.56	$60.39	$78.23	H H H H H H H D Y
Inside Wireman						
	Apprentice Rates:					
	Period 1		$20.02	$27.34	$34.66	
	Period 2		$21.65	$29.78	$37.92	
	Period 3		$24.89	$34.65	$44.40	
	Period 4		$26.53	$37.10	$47.68	
	Period 5		$29.78	$41.98	$54.18	
	Period 6		$33.04	$46.87	$60.70	

Rate Applies To The Following

Arenac, Bay, Clare, Gladwin, Iosco, Isabella, Midland, Ogemaw, Roscommon, Tuscola

Clare-- -Townships of Frost, Franklin, Hayes, Hamilton, Hatton, Arthur, Grand and Sheridan ONLY.

Iosco-- -Townships of Reno, Grant, Tawas, Baldwin, Burleigh, Sherman and Alabaster ONLY.

Isabella-- -Townships of Vernon, Wise, Isabella, Denver, Union and Chippewa ONLY.

Midland-- -All Townships EXCEPT Mount Haley, Jasper, Porter and Ingersoll.

Ogemaw-- -All Townships EXCEPT Foster, Rose and Goodar.

Roscommon-- -Townships of Roscommon, Backus and Nester ONLY.

Tuscola-- -Townships of Wisner and Akron ONLY.

Electrician		EC-692-IW-Z	**$39.09**	**$55.20**	**$71.31**		H H H H H H H D Y
Inside Wireman							
	Apprentice Rates:						
	Period 1		$18.60	$25.21	$31.82		
	Period 2		$20.07	$27.42	$34.76		
	Period 3		$23.01	$31.83	$40.64		
	Period 4		$24.48	$34.03	$43.58		
	Period 5		$27.42	$38.45	$49.46		
	Period 6		$30.35	$42.84	$55.32		

Rate Applies To The Following

Alcona, Alpena, Cheboygan, Crawford, Emmet, Iosco, Montmorency, Ogemaw, Oscoda, Otsego, Presque Isle

Cheboygan-- -All Townships EXCEPT Mentor

Crawford-- -Lovells Township ONLY.

Emmet-- -Wawatan Township ONLY.

Iosco-- -Townships of Plainfield, Oscoda, Wilbur and Ausable ONLY.

Ogemaw-- -Townships of Foster, Rose and Goodar ONLY

Otsego-- -Townships of Dover, Chester and Charlton ONLY.

Official Request #: 010208

Requestor: Mich Dept of Management & Budget

Project Description: Re-furbished Open Space Furniture Bid

Project Number: #071I6200036

Printed: 1/2/2008

Report: cle class selection

Official 2008 Prevailing Wage Rates for State Funded Projects

Carpenter, Electrician, Laborer

Issue Date: 1/2/2008

Contract must be awarded by: 4/1/2008

Classification Name	Classification Description	Classification Number	Prevailing Wage Rates: Straight Hourly	Time and a Half	Double time	Overtime Provision
Electrician Inside Wireman		EC-8-IW	$47.66	$71.49	$95.32	H H H X H H H D Y
	Apprentice Rates:					
	Period 1		$18.04	$26.56	$35.42	
	Period 2		$21.49	$31.58	$42.10	
	Period 3		$27.68	$41.53	$55.36	
	Period 4		$31.67	$47.51	$63.34	
	Period 5		$35.67	$53.51	$71.34	
	Period 6		$39.66	$59.50	$79.32	

Rate Applies To The Following

Hillsdale Lenawee Monroe

Electrician Inside Wireman		EC-948-IW	$47.52	$68.07	$88.61	H H H H H H H D Y
	Apprentice Rates:					
	1st 6 months		$22.86	$31.08	$39.29	
	2nd 6 months		$24.92	$34.17	$43.41	
	3rd 6 months		$26.98	$37.26	$47.53	
	4th 6 months		$29.03	$40.33	$51.63	
	5th 6 months		$31.09	$46.68	$60.09	
	6th 6 months		$33.13	$46.48	$59.83	
	7th 6 months		$37.25	$52.66	$68.07	
	8th 6 months		$39.31	$55.76	$72.19	
	9th 6 months		$41.35	$59.40	$77.05	
	10th 6 months		$43.41	$61.90	$80.39	

Rate Applies To The Following

Genesee Lapeer Shiawassee Tuscola

Shiawassee-- -All Townships EXCEPT Woodhull and Perry.

Tuscola-- -Millington Township ONLY.

Official Request #: 010208

Requestor: Mich Dept of Management & Budget

Project Description: Re-furbished Open Space Furniture Bid

Project Number: #071I6200036

Printed: 1/2/2008

Report: cle class selection

Official 2008 Prevailing Wage Rates for State Funded Projects

Carpenter, Electrician, Laborer

Issue Date: 1/2/2008

Contract must be awarded by: 4/1/2008

Page 16 of 33

Classification Name	Classification Description	Classification Number	Prevailing Wage Rates: Straight Hourly	Time and a Half	Double time	Overtime Provision
Electrician		**EC-979-A100**	**$39.56**	**$53.66**	**$67.75**	H H H H H H H D Y
Inside Wireman for projects more than $100,000						
	Apprentice Rates:					
	Period 1		$23.27	$30.31	$37.36	
	Period 2		$24.69	$32.44	$40.19	
	Period 3		$27.50	$36.66	$45.82	
	Period 4		$30.33	$40.91	$51.49	
	Period 5		$33.92	$45.19	$56.47	
	Period 6		$36.73	$49.41	$62.10	
Rate Applies To The Following						
Delta Menominee Schoolcraft						
Electrician		**EC-979-B100**	**$35.86**	**$48.10**	**$60.34**	H H H H H H H D Y
Inside Wireman for projects less than $100,000						
	Apprentice Rates:					
	Period 1		$21.42	$27.55	$33.67	
	Period 2		$22.65	$29.37	$36.11	
	Period 3		$25.09	$33.05	$41.01	
	Period 4		$28.77	$38.57	$48.37	
	Period 5		$33.41	$44.43	$55.45	
Rate Applies To The Following						
Delta Menominee Schoolcraft						
Laborer		**L1075**	**$31.47**	**$42.57**	**$53.66**	H H H H H H H D Y
Construction Laborer						
	Apprentice Rates:					
	0-1,000 work hours		$25.92	$34.24	$42.56	
	1,001-2,000 work hours		$27.03	$35.90	$44.78	
	2,001-3,000 work hours		$28.14	$37.57	$47.00	
	3,001-4,000 work hours		$30.36	$40.90	$51.44	
Rate Applies To The Following						
Genesee Lapeer Shiawassee						

Official Request #: 010208

Requestor: Mich Dept of Management & Budget

Project Description: Re-furbished Open Space Furniture Bid

Project Number: #071I6200036

Printed: 1/2/2008

Report: cle class selection

Official 2008 Prevailing Wage Rates for State Funded Projects

Carpenter, Electrician, Laborer

Issue Date: 1/2/2008

Contract must be awarded by: 4/1/2008

Classification Name	Classification Description	Classification Number	Prevailing Wage Rates Straight Hourly	Time and a Half	Double time	Overtime Provision
Laborer		L1075-2	$35.24	$47.25	$59.26	H H H H H H D D Y
Laborer						
	Apprentice Rates:					
	0-1,000 hours		$29.24	$38.25	$47.26	
	1,001-2,000 hours		$30.44	$40.05	$49.66	
	2,001-3,000 hours		$31.64	$41.85	$52.06	
	3,001-4,000 hours		$34.04	$45.45	$56.86	

Rate Applies To The Following

Sanilac St. Clair

Laborer		L1076-A-A	$37.62	$53.35	$69.07	H H D H D D D D Y
Construction Laborer, Mason Tender, Carpenter Tender, Drywall Handler, Cement Finisher tender, concrete chute and concrete Bucket Handler, Concrete Laborer, Demolition Laborer						
	Apprentice Rates:					
	0-1,000 work hours		$31.98	$44.89	$57.79	
	1,001-2,000 work hours		$33.11	$46.58	$60.05	
	2,001-3,000 work hours		$34.24	$48.28	$62.31	
	3,001-4,000 work hours		$36.49	$51.66	$66.81	

Rate Applies To The Following

Livingston Oakland

Livingston-- -North of M-59 and East of Oak Grove Road.

Laborer		L1076-A-B	$37.88	$53.74	$69.59	H H D H D D D D Y
Signal man (on sewer & caisson work); air,electric or gasoline tool operator (including concrete vibrator operator,acetylene torch & air hammer operator); scaffold builder, caisson worker						

Rate Applies To The Following

Livingston Oakland

Livingston-- -North of M-59 and East of Oak Grove Road.

Laborer		L1076-A-C	$38.37	$54.47	$70.57	H H D H D D D D Y
Lansing Burner, Blaster & Powder Man						

Rate Applies To The Following

Livingston Oakland

Livingston-- -North of M-59 and East of Oak Grove Road.

Official Request #: 010208

Requestor: Mich Dept of Management & Budget

Project Description: Re-furbished Open Space Furniture Bid

Project Number: #071I6200036

Printed: 1/2/2008

Report: cle class selection

Official 2008 Prevailing Wage Rates for State Funded Projects

Carpenter, Electrician, Laborer

Issue Date: 1/2/2008

Contract must be awarded by: 4/1/2008

Classification Name	Classification Description	Classification Number	Prevailing Wage Rates: Straight Hourly	Time and a Half	Double time	Overtime Provision
Laborer	Furnance battery heater tender, burning bar & oxy-acetylene gun, expediter man, top man and/or bottom man (blast furnace work)	L1076-A-D	$38.12	$54.10	$70.07	H H D H D D D D Y
Rate Applies To The Following						
Livingston	Oakland					
Livingston--	-North of M-59 and East of Oak Grove Road.					
Laborer	Cleaner/ sweeper laborer, furniture laborer	L1076-A-E	$32.17	$45.17	$58.17	H H D H D D D D Y
Rate Applies To The Following						
Livingston	Oakland					
Livingston--	-North of M-59 and East of Oak Grove Road.					
Laborer	Demolition Laborer	L1076-D	$37.62	$53.35	$69.07	H H D H D D D D Y
Rate Applies To The Following						
Livingston	Oakland					
Livingston--	-North of M-59 and East of Oak Grove Rd					
Laborer	Class A Laborer: building and heavy construction work, demolition, mortar mixers, mason tender, carpenter tender, fire watch, heater tender, all 3" pumps and below, furniture mover, material mixers, vibrator operators, operators of concrete mixers, chipping hammers, tamping machines, sand blasters, operators of motor driven buggies, plaster mixers and plasterer tenders, pipe or crock layers, caisson work in buildings only, except others falling within class B.	L1098-N-A	$25.24	$33.53	$41.81	H H H H H H H D Y
	Apprentice Rates:					
	0-1,000 work hours		$21.10	$27.31	$33.53	
	1,001-2,000 work hours		$21.93	$28.56	$35.19	
	2,001-3,000 work hours		$22.75	$29.79	$36.83	
	3,001-4,000 work hours		$24.41	$32.28	$40.15	
Rate Applies To The Following						

Alcona	Alpena	Antrim	Benzie	Charlevoix	Cheboygan	Crawford	Emmet
Grand Traverse	Iosco	Kalkaska	Leelanau	Missaukee	Montmorency	Oscoda	Otsego
Presque Isle	Wexford						

Official Request #: 010208

Requestor: Mich Dept of Management & Budget

Project Description: Re-furbished Open Space Furniture Bid

Project Number: #071I6200036

Printed: 1/2/2008

Report: cle class selection

Official 2008 Prevailing Wage Rates for State Funded Projects

Carpenter, Electrician, Laborer

Issue Date: 1/2/2008

Contract must be awarded by: 4/1/2008

Classification Name	Classification Description	Classification Number	Prevailing Wage Rates: Straight Hourly	Time and a Half	Double time	Overtime Provision
Laborer		L1098-N-B	$25.84	$34.43	$43.01	H H H H H H H D Y
Class B Laborer: Concrete breakers (90 pound hammer or less) and cement gun nozzelmen						
	Apprentice Rates:					
	0-1,000 work hours		$21.55	$27.99	$34.43	
	1,001-2,000 work hours		$22.41	$29.28	$36.15	
	2,001-3,000 work hours		$23.26	$30.55	$37.85	
	3,001-4,000 work hours		$24.98	$33.13	$41.29	

Rate Applies To The Following

Alcona	Alpena	Antrim	Benzie	Charlevoix	Cheboygan	Crawford	Emmet
Grand Traverse	Iosco	Kalkaska	Leelanau	Missaukee	Montmorency	Oscoda	Otsego
Presque Isle	Wexford						

Laborer		L1098-N-C	$26.24	$35.03	$43.81	H H H H H H H D Y	
Class C Refractory Work: inside or outside digester, tanks, lime kilns, chests, boilers, and boiler tubes, including the handling of acid, chlorine, chemicals, epoxies, liquids and cleaning of existing precipitators, hydro blasting, hydro washing, and sandblasting.							
	Apprentice Rates:						
	0-1,000 work hours		$21.85	$28.44	$35.03		
	1,001-2,000 work hours		$22.73	$29.76	$36.79		
	2,001-3,000 work hours		$23.60	$31.07	$38.53		
	3,001-4,000 work hours		$25.36	$33.71	$42.05		

Rate Applies To The Following

Alcona	Alpena	Antrim	Benzie	Charlevoix	Cheboygan	Crawford	Emmet
Grand Traverse	Iosco	Kalkaska	Leelanau	Missaukee	Montmorency	Oscoda	Otsego
Presque Isle	Wexford						

Official Request #: 010208

Requestor: Mich Dept of Management & Budget

Project Description: Re-furbished Open Space Furniture Bid

Project Number: #071I6200036

Printed: 1/2/2008

Report: cle class selection

Official 2008 Prevailing Wage Rates for State Funded Projects

Carpenter, Electrician, Laborer

Issue Date: 1/2/2008

Contract must be awarded by: 4/1/2008

Classification Name	Classification Description	Classification Number	Prevailing Wage Rates: Straight Hourly	Time and a Half	Double time	Overtime Provision
Laborer	Class A Laborer on building and heavy construction work, mortar mixers, mason tender, carpenter tender, fire watch, all 3" pumps and below, plaster mixers, plaster tenders, pipe or crock layers, signal men and top men on caisson work, mechanized buggy operators, cement finisher tender, air, electric and gas-driven tools, concrete vibrators & demolition work	L1098-S-A	$28.82	$38.67	$48.52	H H H H H H H D Y
	Apprentice Rates:					
	0-1,000 work hours		$23.90	$31.29	$38.68	
	1,001-2,000 work hours		$24.88	$32.76	$40.64	
	2,001-3,000 work hours		$25.86	$34.23	$42.60	
	3,001-4,000 work hours		$27.84	$37.20	$46.56	

Rate Applies To The Following

Arenac	Bay	Clare	Gladwin	Gratiot	Huron	Isabella	Midland
Ogemaw	Roscommon	Saginaw	Tuscola				

Laborer	Class B Laborer air or electric-driven pavement breakers and jackhammers over 50 lbs., tunnel miners and tunnel muckers, tunnel and shaft underpinning contributing to the structural support of buildings	L1098-S-B	$29.32	$39.42	$49.52	H H H H H H H D Y
	Apprentice Rates:					
	0-1,000 work hours		$24.27	$31.84	$39.42	
	1,001-2,000 work hours		$25.28	$33.36	$41.44	
	2,001-3,000 work hours		$26.29	$34.88	$43.46	
	3,001-4,000 work hours		$28.31	$37.90	$47.50	

Rate Applies To The Following

Arenac	Bay	Clare	Gladwin	Gratiot	Huron	Isabella	Midland
Ogemaw	Roscommon	Saginaw	Tuscola				

Official Request #: 010208

Requestor: Mich Dept of Management & Budget

Project Description: Re-furbished Open Space Furniture Bid

Project Number: #071I6200036

Printed: 1/2/2008

Report: cle class selection

Official 2008 Prevailing Wage Rates for State Funded Projects

Carpenter, Electrician, Laborer

Issue Date: 1/2/2008

Contract must be awarded by: 4/1/2008

Classification Name	Classification Description	Classification Number	Prevailing Wage Rates: Straight Hourly	Time and a Half	Double time	Overtime Provision
Laborer		**L1098-S-C**	**$29.82**	**$40.17**	**$50.52**	H H H H H H H D Y
Class C Laborer-drillers & blasters, burners & welders						
	Apprentice Rates:					
	0-1,000 work hours		$24.64	$32.40	$40.16	
	1,001-2,000 work hours		$25.68	$33.96	$42.24	
	2,001-3,000 work hours		$26.72	$35.52	$44.32	
	3,001-4,000 work hours		$28.78	$38.61	$48.44	

Rate Applies To The Following

Arenac	Bay	Clare	Gladwin	Gratiot	Huron	Isabella	Midland
Ogemaw	Roscommon	Saginaw	Tuscola				

Laborer		**L1329-B-A**	**$29.37**	**$39.21**	**$49.05**	H H D H D D D D Y	
Class A Laborer - construction laborer on building and heavy construction work, storm, and sanitary sewers on all construction sites and streets which are not included in the road builder rates, tool crib attendant, civil engineer helper, rodman, oxi-gun operator, propane or acetylene cutting torch operator, motor driven buggies, chipping hammers, tamping machines, green cutting, sand blasters, mason tenders, mortar mixers, marterial mixers, vibrator operators, concrete mixers, laborers with concrete crew, mixer to pour, including pour time from trucks.							
All hours worked on Saturday except as an inclement weather or M-F holiday make up day, must be paid @ time & one half.							
	Apprentice Rates:						
	0 - 1,000 hours		$24.45	$31.83	$39.21		
	1,001 - 2,000 hours		$25.43	$33.30	$41.17		
	2,001 - 3,000 hours		$26.42	$34.79	$43.15		
	3,001 - 4,000 hours		$28.39	$37.74	$47.09		

Rate Applies To The Following

Alger	Baraga	Chippewa	Delta	Dickinson	Gogebic	Houghton	Iron
Keweenaw	Luce	Mackinac	Marquette	Menominee	Ontonagon	Schoolcraft	

Official Request #: 010208

Requestor: Mich Dept of Management & Budget

Project Description: Re-furbished Open Space Furniture Bid

Project Number: #071I6200036

Printed: 1/2/2008

Report: cle class selection

Official 2008 Prevailing Wage Rates for State Funded Projects

Carpenter, Electrician, Laborer

Issue Date: 1/2/2008

Contract must be awarded by: 4/1/2008

Classification Name	Classification Description	Classification Number	Prevailing Wage Rates: Straight Hourly	Time and a Half	Double time	Overtime Provision
Laborer	Class B Laborer - Cement gun nozzleman, blasters, miners, drillers, buster operators, layers of all non-metallic pipe All hours worked on Saturdays, except as an inclement weather or M-F holiday make up day must be paid @ time & one half.	L1329-B-B	$29.77	$39.81	$49.85	H H D H D D D D Y

Rate Applies To The Following

Alger	Baraga	Chippewa	Delta	Dickinson	Gogebic	Houghton	Iron
Keweenaw	Luce	Mackinac	Marquette	Menominee	Ontonagon	Schoolcraft	

Laborer	Class C Laborer - caisson worker & airtrack All hours worked on Saturday except as an inclement weather or M-F holiday make up day, must be paid @ time & one half.	L1329-B-C	$30.12	$40.34	$50.55	H H D H D D D D Y

Rate Applies To The Following

Alger	Baraga	Chippewa	Delta	Dickinson	Gogebic	Houghton	Iron
Keweenaw	Luce	Mackinac	Marquette	Menominee	Ontonagon	Schoolcraft	

Laborer	Class E Laborer - digester, tanks & kilns All hours worked on Saturday except as an inclement weather or M-F holiday make up day, must be paid @ time & one half.	L1329-B-D	$31.42	$42.29	$53.15	H H D H D D D D Y

Rate Applies To The Following

Alger	Baraga	Chippewa	Delta	Dickinson	Gogebic	Houghton	Iron
Keweenaw	Luce	Mackinac	Marquette	Menominee	Ontonagon	Schoolcraft	

Official Request #: 010208
Requestor: Mich Dept of Management & Budget
Project Description: Re-furbished Open Space Furniture Bid
Project Number: #071I6200036

Printed: 1/2/2008
Report: cle class selection

Official 2008 Prevailing Wage Rates for State Funded Projects

Carpenter, Electrician, Laborer

Issue Date: 1/2/2008

Contract must be awarded by: 4/1/2008

Classification Name	Classification Description	Classification Number	Prevailing Wage Rates: Straight Hourly	Time and a Half	Double time	Overtime Provision
Laborer		L33401-A-CC	$37.62	$53.35	$69.07	H H D H D D D D Y
Construction Laborer, Mason Tender,Carpenter Tender, Drywall Handler, Concrete Laborer, Cement Finisher Tender, Concrete Chute, and Concrete Bucket Handler						
	Apprentice Rates:					
	0-1,000 work hours		$31.98	$44.89	$57.79	
	1,001 - 2,000 work hours		$33.11	$46.58	$60.05	
	2,001 - 3,000 work hours		$34.24	$48.28	$62.31	
	3,001 - 4,000 work hours		$36.49	$51.66	$66.81	
Rate Applies To The Following						
Macomb Wayne						
Laborer		L33401-B-SB	$37.88	$53.74	$69.59	H H D H D D D D Y
Signal Man (on sewer & caisson work), Air, Electric or Gasoline Tool Operator, Concrete Vibrator Operator, Acetylene Torch & Air Hammer Operator; Scaffold Builder, Caisson Worker						
Rate Applies To The Following						
Macomb Wayne						
Laborer		L33401-C-TO	$38.37	$54.47	$70.57	H H D H D D D D Y
Lansing Burner, Blaster & Powder Man; Air, Electric or Gasoline Tool Operator (Blast Furance Work or Battery Work)						
Rate Applies To The Following						
Macomb Wayne						
Laborer		L33401-D-HH	$38.12	$54.10	$70.07	H H D H D D D D Y
Furnace Battery Heater Tender, Burning Bar & Oxy-Acetylene Gun						
Rate Applies To The Following						
Macomb Wayne						

Official Request #: 010208

Requestor: Mich Dept of Management & Budget

Project Description: Re-furbished Open Space Furniture Bid

Project Number: #071I6200036

Printed: 1/2/2008

Report: cle class selection

Official 2008 Prevailing Wage Rates for State Funded Projects

Carpenter, Electrician, Laborer

Issue Date: 1/2/2008

Contract must be awarded by: 4/1/2008

Classification Name	Classification Description	Classification Number	Prevailing Wage Rates: Straight Hourly	Time and a Half	Double time	Overtime Provision
Laborer	Expediter Man, Top Man and/or Bottom Man (Blast Furnace Work or Battery Work)	L33401-E-EX	$38.87	$53.97	$69.07	H H D H D D D D Y
Rate Applies To The Following						
Macomb Wayne						
Laborer	Cleaner/Sweeper Laborer; Furniture Laborer	L33401-F-CL	$32.17	$45.17	$58.17	H H D H D D D D Y
Rate Applies To The Following						
Macomb Wayne						
Laborer	Demolition Laborer	L334D	$37.62	$53.35	$69.07	H H D H D D D D Y
Rate Applies To The Following						
Macomb Wayne						
Laborer	Class A Laborer - all construction on buildings, pumps, well wheels, air, electric or gasoline tools, motor driven buggies, fire watch duty, working on swing scaffolds, heavy construction work, carpenter tender, cement finisher tender, heater tender, and flagperson.	L355-1-A	$27.14	$36.35	$45.56	H H H H H H H D Y
	Apprentice Rates:					
	0-1,000 work hours		$22.54	$29.45	$36.36	
	1,001-2,000 work hours		$23.46	$30.83	$38.20	
	2,001-3,000 work hours		$24.38	$32.21	$40.04	
	3,001-4,000 work hours		$26.22	$34.97	$43.72	
Rate Applies To The Following						
Allegan Barry Berrien Branch Calhoun Cass Kalamazoo St. Joseph Van Buren						

Official Request #: 010208

Requestor: Mich Dept of Management & Budget

Project Description: Re-furbished Open Space Furniture Bid

Project Number: #071I6200036

Printed: 1/2/2008

Report: cle class selection

Official 2008 Prevailing Wage Rates for State Funded Projects

Carpenter, Electrician, Laborer

Issue Date: 1/2/2008

Contract must be awarded by: 4/1/2008

Classification Name	Classification Description	Classification Number	Prevailing Wage Rates: Straight Hourly	Time and a Half	Double time	Overtime Provision
Laborer		L355-1-B	$27.39	$36.73	$46.06	H H H H H H H D Y
Class B Laborer - jackhammer operators, crocklayers and caisson worker in buildings.						
	Apprentice Rates:					
	0-1,000 work hours		$22.72	$29.72	$36.72	
	1,001-2,000 work hours		$23.66	$31.13	$38.60	
	2,001-3,000 work hours		$24.59	$32.52	$40.46	
	3,001-4,000 work hours		$26.46	$35.33	$44.20	

Rate Applies To The Following

Allegan Barry Berrien Branch Calhoun Cass Kalamazoo St. Joseph
Van Buren

Laborer		L355-1-C	$27.89	$37.48	$47.06	H H H H H H H D Y
Class C Laborer - top men on chimneys or towers over thirty feet in height, material mixers, portable mixer operator, plasterer tender, mason tender certified from M.L.T.I., and MLTAI certified demolition burner.						
	Apprentice Rates:					
	0-1,000 work hours		$23.10	$30.29	$37.48	
	1,001-2,000 work hours		$24.06	$31.73	$39.40	
	2,001-3,000 work hours		$25.01	$33.16	$41.30	
	3,001-4,000 work hours		$26.93	$36.04	$45.14	

Rate Applies To The Following

Allegan Barry Berrien Branch Calhoun Cass Kalamazoo St. Joseph
Van Buren

Official Request #: 010208
Requestor: Mich Dept of Management & Budget
Project Description: Re-furbished Open Space Furniture Bid
Project Number: #071I6200036

Printed: 1/2/2008
Report: cle class selection

Official 2008 Prevailing Wage Rates for State Funded Projects

Carpenter, Electrician, Laborer

Issue Date: 1/2/2008

Contract must be awarded by: 4/1/2008

Page 26 of 33

Classification Name	Classification Description	Classification Number	Prevailing Wage Rates: Straight Hourly	Time and a Half	Double time	Overtime Provision
Laborer		**L355-1-D**	**$32.34**	**$43.17**	**$54.00**	H H H H H H H D Y
Class D Laborer - concrete specialist when no cement finishers are available; troweling, finishing, screeding, patching, cutting, curing of cast in place or precast concrete by any and all methods.						
	Apprentice Rates:					
	0-1,000 work hours		$26.92	$35.04	$43.16	
	1,001-2,000 work hours		$28.01	$36.68	$45.34	
	2,001-3,000 work hours		$29.09	$38.30	$47.50	
	3,001-4,000 work hours		$31.26	$41.55	$51.84	

Rate Applies To The Following

Allegan, Barry, Berrien, Branch, Calhoun, Cass, Kalamazoo, St. Joseph, Van Buren

Laborer		**L355-2-A**	**$26.60**	**$35.54**	**$44.48**	H H H H H H H D Y
Class A Laborer - all construction on buildings, pumps, well wheels, air, electric or gasoline tools, motor driven buggies, fire watch duty, working on swing scaffolds, heavy construction work, carpenter tender, cement finisher tender, heater tender & flagperson.						
	Apprentice Rates:					
	0 - 1,000 work hours		$22.13	$28.84	$35.54	
	1,001 - 2,000 work hours		$23.02	$30.17	$37.32	
	2,001 - 3,000 work hours		$23.92	$31.52	$39.12	
	3,001 - 4,000 work hours		$25.71	$34.20	$42.70	

Rate Applies To The Following

Ionia, Kent, Lake, Manistee, Mason, Mecosta, Montcalm, Muskegon, Newaygo, Oceana, Osceola, Ottawa

Ionia-- -Ionia excluding the city of Portland

Official Request #: 010208

Requestor: Mich Dept of Management & Budget

Project Description: Re-furbished Open Space Furniture Bid

Project Number: #071I6200036

Printed: 1/2/2008

Report: cle class selection

Official 2008 Prevailing Wage Rates for State Funded Projects

Carpenter, Electrician, Laborer

Issue Date: 1/2/2008

Contract must be awarded by: 4/1/2008

Classification Name	Classification Description	Classification Number	Prevailing Wage Rates: Straight Hourly	Time and a Half	Double time	Overtime Provision
Laborer		L355-2-B	**$26.85**	**$35.92**	**$44.98**	H H H H H H H D Y
Class B Laborer - jackhammer operators, crocklayers and caisson worker in buildings.						
	Apprentice Rates:					
	0-1,000 work hours		$22.32	$29.12	$35.92	
	1,001-2,000 work hours		$23.22	$30.47	$37.72	
	2,001-3,000 work hours		$24.13	$31.84	$39.54	
	3,001-4,000 work hours		$25.94	$34.55	$43.16	

Rate Applies To The Following

Ionia	Kent	Lake	Manistee	Mason	Mecosta	Montcalm	Muskegon
Newaygo	Oceana	Osceola	Ottawa				

Ionia-- -Ionia excluding the city of Portland

Laborer		L355-2-C	**$27.35**	**$36.67**	**$45.98**	H H H H H H H D Y	
Class C Laborer - top men on chimneys or towers over thirty feet in height, material mixers, portable mixer operator, plasterer tender, mason tender, and demolition burner.							
	Apprentice Rates:						
	0-1,000 work hours		$22.69	$29.68	$36.66		
	1,001-2,000 work hours		$23.62	$31.07	$38.52		
	2,001-3,000 work hours		$24.56	$32.48	$40.40		
	3,001-4,000 work hours		$26.42	$35.27	$44.12		

Rate Applies To The Following

Ionia	Kent	Lake	Manistee	Mason	Mecosta	Montcalm	Muskegon
Newaygo	Oceana	Osceola	Ottawa				

Ionia-- -Excluding the city of Portland

Laborer		L355-2-D	**$31.16**	**$41.45**	**$51.74**	H H H H H H H D Y	
Class D Laborer - concrete specialist when no cement finishers are available; troweling, finishing, screeding, patching, cutting, curing of cast in place or precast concrete by any and all methods.							
	Apprentice Rates:						
	0-1,000 work hours		$26.02	$33.74	$41.46		
	1,001-2,000 work hours		$27.04	$35.27	$43.50		
	2,001-3,000 work hours		$28.07	$36.82	$45.56		
	3,001-4,000 work hours		$30.13	$39.90	$49.68		

Rate Applies To The Following

Ionia	Kent	Lake	Manistee	Mason	Mecosta	Montcalm	Muskegon
Newaygo	Oceana	Osceola	Ottawa				

Ionia-- -excluding the city of Portland

Official Request #: 010208

Requestor: Mich Dept of Management & Budget

Project Description: Re-furbished Open Space Furniture Bid

Project Number: #071I6200036

Printed: 1/2/2008

Report: cle class selection

Official 2008 Prevailing Wage Rates for State Funded Projects

Carpenter, Electrician, Laborer

Issue Date: 1/2/2008

Contract must be awarded by: 4/1/2008

Classification Name	Classification Description	Classification Number	Prevailing Wage Rates: Straight Hourly	Time and a Half	Double time	Overtime Provision
Laborer		L499-A	$30.71	$41.38	$52.05	H H H H H H H D Y
Carpenter tender, cement mason tender, mason tender, firebrick tender, plasterer tender, concrete chute bucket handler, concrete vibrator operator, concrete grader, mixing, handling, conveying by any method of all concrete, demolition laborer, caisson worker, signalman on concrete pours, portable mixer operator, unloading and moving of furniture, general laborers, firewatch, flagperson, watchperson, security guard, rodman, wellwheels, laser beam, general cleanup and all other laborer work of a skilled or unskilled nature						
	Apprentice Rates:					
	0-1,000 hours		$25.37	$33.37	$41.37	
	1,001-2,000 hours		$26.44	$34.97	$43.51	
	2,001-3,000 hours		$27.51	$36.58	$45.65	
	3,001-4,000 hours		$29.64	$39.77	$49.91	

Rate Applies To The Following

Hillsdale Jackson Lenawee

Laborer		L499-A-A	$36.63	$49.56	$62.49	H H H H H H H D N
Laborer, demolition, drywall handlers, general jobsite cleanup						
	Apprentice Rates:					
	0-1,000 hours		$30.99	$41.10	$51.21	
	1,001-2,000 hours		$32.12	$42.80	$53.47	
	2,001-3,000 hours		$33.25	$44.49	$55.73	
	3,001-4,000 hours		$35.50	$47.86	$60.23	

Rate Applies To The Following

Livingston Washtenaw

Livingston-- -Area within M-59 north boundary, OakGrove Rd on west, south from Howell to and including Pinckney

Laborer		L499-A-B	$36.83	$49.86	$62.89	H H H H H H H D N
Mortar mixer; material mixer; air, gas or electric tool operator, power buggy operator, stone setter, tender, scaffold builder or dismantler, windlass operator, tar and kettle operator						
	Apprentice Rates:					
	0-1,000 hours		$31.14	$41.32	$51.51	
	1,001-2,000 hours		$32.28	$43.04	$53.79	
	2,001-3,000 hours		$33.42	$44.74	$56.07	
	3,001-4,000 hours		$35.69	$48.15	$60.61	

Rate Applies To The Following

Livingston Washtenaw

Livingston-- -South of M-59, east of M-151 (Oak Grove Rd), south from Howell to and including Pinckney

Official Request #: 010208

Requestor: Mich Dept of Management & Budget

Project Description: Re-furbished Open Space Furniture Bid

Project Number: #071I6200036

Printed: 1/2/2008

Report: cle class selection

Official 2008 Prevailing Wage Rates for State Funded Projects

Carpenter, Electrician, Laborer

Issue Date: 1/2/2008

Contract must be awarded by: 4/1/2008

Classification Name	Classification Description	Classification Number	Prevailing Wage Rates: Straight Hourly	Time and a Half	Double time	Overtime Provision
Laborer		L499-A-B2	$37.13	$50.31	$63.49	H H H H H H H D N
Jack hammering and chipping on concrete						
	Apprentice Rates:					
	0-1,000 hours		$31.37	$41.67	$51.97	
	1,001-2,000 hours		$32.52	$43.40	$54.27	
	2,001-3,000 hours		$33.67	$45.12	$56.57	
	3,001-4,000 hours		$35.98	$48.58	$61.19	

Rate Applies To The Following

Livingston Washtenaw

Livingston-- -South of M-59, east of M-151 (Oak Grove Rd), south from Howell to and including Pinckney

Laborer		L499-A-C	$36.95	$50.04	$63.13	H H H H H H H D N
Crock or pipe laborer, caisson worker						
	Apprentice Rates:					
	0-1,000 hours		$31.23	$41.46	$51.69	
	1,001-2,000 hours		$32.37	$43.17	$53.97	
	2,001-3,000 hours		$33.52	$44.90	$56.27	
	3,001-4,000 hours		$35.81	$48.33	$60.85	

Rate Applies To The Following

Livingston Washtenaw

Livingston-- -South of M-59, east of M-151 (Oak Grove Rd), south from Howell to and including Pinckney

Laborer		L499-A-D	$35.84	$48.38	$60.91	H H H H H H H D N
Watchmen, Civil Engineer Helpers, or Rodmen						
	Apprentice Rates:					
	0-1,000 hours		$30.40	$40.22	$50.03	
	1,001-2,000 hours		$31.49	$41.85	$52.21	
	2,001-3,000 hours		$32.57	$43.47	$54.37	
	3,001-4,000 hours		$34.75	$46.74	$58.73	

Rate Applies To The Following

Livingston Washtenaw

Livingston-- -South of M-59, east of M-151(Oak Grove Rd), and south from Howell to and including Pinckney

Official Request #: 010208

Requestor: Mich Dept of Management & Budget

Project Description: Re-furbished Open Space Furniture Bid

Project Number: #071I6200036

Printed: 1/2/2008

Report: cle class selection

Official 2008 Prevailing Wage Rates for State Funded Projects

Carpenter, Electrician, Laborer

Issue Date: 1/2/2008

Contract must be awarded by: 4/1/2008

Classification Name	Classification Description	Classification Number	Prevailing Wage Rates: Straight Hourly	Time and a Half	Double time	Overtime Provision
Laborer		L499-A-E	$33.63	$45.06	$56.49	H H H H H H H D N
Final cleaning: washing or cleaning of walls, partitions, ceilings, windows, bathrooms, kitchens, laboratories and all fixtures and facilities therein. Clean-up mopping, washing, waxing, and polishing or dusting of all floors or areas.						
Rate Applies To The Following						
Livingston Washtenaw						
Livingston-- -South of M-59, east of M-151 (Oak Grove Rd), and south from Howell to and including Pinckney						
Laborer		L499D	$31.91	$43.18	$54.45	H H H H H H H D Y
Demolition High Burner						
Rate Applies To The Following						
Hillsdale Jackson Lenawee						
Laborer		L499J	$31.35	$42.34	$53.33	H H H H H H H D Y
Demolition ground burner						
Rate Applies To The Following						
Hillsdale Jackson Lenawee						
Laborer		L499ja	$31.35	$42.34	$53.33	H H H H H H H D Y
Jackhammer & Acetylene Torch						
	Apprentice Rates:					
	0-1,000 hours		$25.85	$34.09	$42.33	
	1,001-2,000 hours		$26.95	$35.74	$44.53	
	2,001-3,000 hours		$28.05	$37.39	$46.73	
	3,001-4,000 hours		$30.25	$40.69	$51.13	
Rate Applies To The Following						
Hillsdale Jackson Lenawee						

Official Request #: 010208
Requestor: Mich Dept of Management & Budget
Project Description: Re-furbished Open Space Furniture Bid
Project Number: #071I6200036

Printed: 1/2/2008
Report: cle class selection

Official 2008 Prevailing Wage Rates for State Funded Projects

Carpenter, Electrician, Laborer

Issue Date: 1/2/2008

Contract must be awarded by: 4/1/2008

Classification Name	Classification Description	Classification Number	Prevailing Wage Rates: Straight Hourly	Time and a Half	Double time	Overtime Provision
Laborer		**L499L**	**$31.09**	**$41.60**	**$52.11**	H H H H H H H D Y

Journeyperson - building and heavy construction craft laborer, portable concrete mixer operator, air, electric or gasoline tool operator, hot dope carrier, tar kettle tender, gasoline vibrators, concrete gas buggies, concrete saw, signal person and top person on sewer, caisson construction (open cut work), concrete shoveler, car pusher, and bottom person (on sewer work). Demolition laborer, 3" pumps & below, jobsite clean-up, deep cleaning, jackhammer operators, burner, crock layer, caisson worker, tunnel mucker and tunnel miner, welder, mortar mixer, scaffold builder, forklift operator (masonry only), helper and tender on work customarily performed by laborers and all laborers working for plasterer tenders.

All hours worked on Saturday except as an inclement weather make-up day, must be paid @ time & one half.

Apprentice Rates:			
0-1,000 hours	$25.83	$33.71	$41.59
1,001-2,000 hours	$26.89	$35.30	$43.71
2,001-3,000 hours	$27.94	$36.87	$45.81
3,001-4,000 hours	$30.04	$40.03	$50.01

Rate Applies To The Following

Clinton Eaton Ingham Ionia Livingston

Ionia-- -the city of Portland only

Livingston-- -West of M-151 (Oak Grove Rd) to west Pinckney Rd and Dexter Pinckney Rd including the city of Howell

Laborer Mason Tender		**L499M**	**$31.12**	**$41.77**	**$52.42**	H H H H H H H D Y

Apprentice Rates:			
0-1,000 hours	$25.80	$33.79	$41.78
1,001-2,000 hours	$26.86	$35.38	$43.90
2,001-3,000 hours	$27.92	$36.97	$46.02
3,001-4,000 hours	$30.06	$40.18	$50.30

Rate Applies To The Following

Clinton Eaton Ingham Ionia Livingston

Ionia-- -City of Portland only

Livingston-- -western portion to M-151 (Oak Grove Rd) from Cohoctash to Pinckney, including all of the City of Howell

Official Request #: 010208

Requestor: Mich Dept of Management & Budget

Project Description: Re-furbished Open Space Furniture Bid

Project Number: #071I6200036

Printed: 1/2/2008

Report: cle class selection

Official 2008 Prevailing Wage Rates for State Funded Projects

Carpenter, Electrician, Laborer

Issue Date: 1/2/2008

Contract must be awarded by: 4/1/2008

Page 32 of 33

Classification Name	Classification Description	Classification Number	Prevailing Wage Rates: Straight Hourly	Time and a Half	Double time	Overtime Provision
Laborer		L499-M-A	$37.28	$50.26	$63.24	H H H H D D D D Y
Construction Laborer, Carpenter Tender, Concrete Laborer, Concrete Chute, & Bucket Handler						
	Apprentice Rates:					
	0-1,000 work hours		$30.79	$40.52	$50.26	
	1,001-2,000 work hours		$32.09	$42.48	$52.86	
	2,001-3,000 work hours		$33.39	$44.42	$55.46	
	3,001-4,000 work hours		$35.98	$48.31	$60.64	
Rate Applies To The Following						
Monroe						
Laborer		L499-M-B	$37.48	$50.56	$63.64	H H H H D D D D Y
Mortar Mixer (inc. concrete & mortar 1/2 cu yd.or smaller machine, or by hand in mortar box);Mason Tender & Cement Mason Tender; Plasterer Tender, Portable Mixer Operator, and Air, Electric & Gasoline Tool Operator (inc. concrete vibrator & acetylene torch); Caisson Worker; Furnace Battery Heater Tender; Signalman on concrete pours only						
Rate Applies To The Following						
Monroe						
Laborer		L499-M-C	$37.78	$51.01	$64.24	H H H H D D D D Y
Hazardous Work: Employees required to wear acid resistant clothing, heat resistant clothing or radiation protective clothing						
Rate Applies To The Following						
Monroe						
Laborer		L499-M-D	$31.62	$41.77	$51.92	H H H H D D D D Y
Cleaner/Sweeper Laborer; Furniture Laborer						
Rate Applies To The Following						
Monroe						

Official Request #: 010208

Requestor: Mich Dept of Management & Budget

Project Description: Re-furbished Open Space Furniture Bid

Project Number: #071I6200036

Printed: 1/2/2008

Report: cle class selection

Official 2008 Prevailing Wage Rates for State Funded Projects

Carpenter, Electrician, Laborer

Issue Date: 1/2/2008

Contract must be awarded by: 4/1/2008

Page 33 of 33

Classification Name	Classification Description	Classification Number	Prevailing Wage Rates: Straight Hourly	Time and a Half	Double time	Overtime Provision
Laborer Demolition Laborer		L499-M-dem	$37.28	$50.26	$63.24	H H H H D D D D Y
Rate Applies To The Following						
Monroe						
Laborer Plasterer Tender, Plastering Machine Operator		LPT-1	$39.00	$55.42	$71.83	H H D H D D D D N
	Apprentice Rates:					
	0 - 1,000 hours		$31.99	$44.90	$57.81	
	1,001 - 2,000 hours		$33.11	$46.58	$60.05	
	2,001 - 3,000 hours		$34.24	$48.28	$62.31	
	3,001 - 4,000 hours		$36.49	$51.66	$66.81	
Rate Applies To The Following						
Livingston Macomb Oakland Wayne Livingston-- -North of M-59 & east of Oak Grove Rd.						
Laborer Plasterer Tender, Plastering Machine Operator		LPT-2	$38.75	$55.04	$71.33	H H D H D D D D N
	Apprentice Rates:					
	0 - 1,000 hours		$32.68	$45.93	$59.19	
	1,001 - 2,000 hours		$33.83	$47.66	$61.49	
	2,001 - 3,000 hours		$34.98	$49.39	$63.79	
	3,001 - 4,000 hours		$37.28	$52.83	$68.39	
Rate Applies To The Following						
Livingston Washtenaw Livingston-- -south of M-59 & east of Oak Grove Rd.						

Official Request #: 010208

Requestor: Mich Dept of Management & Budget

Project Description: Re-furbished Open Space Furniture Bid

Project Number: #071I6200036

Printed: 1/2/2008

Report: cle class selection

APPENDIX J

UL LISTING

SMART · OFFICE · SYSTEMS
The Best Value in Office Furniture

UL Listing

Underwriters Laboratories Inc.

Northbrook, Illinois · (847) 272-8800
Melville, New York · (631) 271-6200
Santa Clara, California · (408) 985-2400
Research Triangle Park,
North Carolina · (919) 549-1400
Camas, Washington · (360) 817-5500

SMART OFFICE SYSTEMS
MR. T. THOMANN
2110 S. WASHINGTON AVE
LANSING, MI 48910

RE: Project Number(s) – 01RT14116

Your most recent Certification is shown below. You may also view this information, or a portion of this information (depending on the product category), on UL's Online Certifications Directory at www.ul.com/database. Please review the text and contact the Conformity Assessment Services staff member who handled your project if revisions are required. For instructions on placing an order for this information in a 3 x 5-inch format, you may refer to the enclosed order form for UL Card Service.

QAWZ
Office Furnishings

February 1, 2002

E225360

SMART OFFICE SYSTEMS, LTD.
2110 S. WASHINGTON AVE, LANSING MI 48910

Rebuilt office furnishings: Acoustical panels.

Rebuilt office furnishing: Acoustical panel, Cat. No. HPF or HFPA followed by 12 thru 60, followed by 42 thru 80.

LOOK FOR LISTING MARK ON PRODUCT

APPENDIX K

Smart Office Systems, Warranty

STATE OF MICHIGAN
Revised 03/01/06

Lifetime Warranty

This warranty is given to the initial purchaser and is valid for as long as the product is owned by the original Buyer. The warranty, which runs from the date of manufacture, covers defects in materials and craftsmanship found during normal usage of the products during the warranty period. If a product is defective, and if written notice of the defect is given to SOS within the Applicable Warranty Period, SOS at its option will either repair or replace the defective product with comparable component or product. The Lifetime warranty applies to all products regardless of the numbers of shifts the product is used each day except as noted above.

Applicable Warranty Period	Products/Restrictions
Lifetime (as defined above)	All SOS Systems Furniture products (Except as noted below).
Ten (10) Years	Electrical Products
Five (5) Years	High wear parts such as veneers, 3MM & T-Mold edging, Fabrics rated "A" Heavy Duty under the Association of Contract Textile's guidelines and other materials/finishes, glides, keyboard mechanisms, pencil drawers, wood materials.
Three (3) Years	Fabrics rate "A" General Contract under the Association of Contract Textile's Guidelines.
Thirty (30) Days	Any Non-Standard or Custom products

This warranty does not apply to "normal wear and tear", alterations to the product not expressly authorized by Seller, products considered to be of a consumable nature such as bulbs, light ballast. It also does not apply to "Customer's Owner Material" (i.e. material specified by Buyer that is not a standard SOS product offering) used in the manufacture of SOS products. A product will not be considered defective, and Seller will not be obligated to replace it, if the product is not installed properly, or is used in a "non-standard" fashion as prescribed by SOS. It is at the sole discretion of SOS to make a determination if defect is due to improper product installation.

This warranty is presented in lieu of all other warranties, express or implied, including by not limited to, any implied warranties of merchantability of fitness for a particular purpose. The customer's exclusive remedy with respect to any and all losses or damages resulting from any cause whatsoever shall repair or replacement is as specified above.

Except as stated above, SOS makes no express or implied warranty as to any product. SOS makes no warranties of merchantability or of fitness for any particular purpose. Product repair or replacement in accordance with this warranty is the buyer's exclusive remedy for any and all product defects. SOS shall not have any tort liability with respect to any product, and SOS shall not be liable for any consequential, economic, indirect or incidental damages arising from any product defect.

International Warranties may differ.

APPENDIX L

Clarification Answers for Smart Office Systems
ITB# 0711620036
Refurbished Furniture and Related Services
March 10, 2006

1. Question: If you order a panel, do you receive all components of the panel or does each part of the panel need to be ordered separately?

Answer: Yes, you receive all components of the panel.

2. Question: Is there a reason why Sections 1.222 through 1.224 of the ITB were not discussed in your proposal?

Answer: SOS followed the bid format which was described on page 82 and 83 of the ITB. The items in question were not included on this format. SOS did provide pricing for each of these items within the ITB.

SOS is providing the information you have requested to further describe / clarify the services and how they shall be handled below. This description does not change, in any way the information previously provided by SOS.

1.222 Cleaning Service

Cleaning services offered

Fabric panel, Fabric flipper doors, Tack boards and Fabric hanging lateral bin faces

- Fabric surfaces on the above products can be cleaned on-site were they are currently installed.
- Fabric surfaces on the above product that is not currently installed can be clean in a facility provided by the State of Michigan or in a space provided by Smart office Systems.
- The fabric cleaning process utilizes upholstery cleaning equipment and cleaners specifically developed for the cleaning of upholstery.
- On-site cleaning would require reasonable access to water and power.

Laminate and painted surfaces

- Laminate and painted can be cleaned on-site were they are currently installed. Only exposed surfaces will be cleaned unless otherwise requested.
- Laminate and painted surfaces that are not currently installed can be clean in a facility provided by the State of Michigan or in a space provided by Smart office Systems. The total surface area will be cleaned.
- This cleaning process utilizes a citrus based environmentally friendly cleaning solvent to remove all dirt, grime and soiling.
- On-site cleaning would require would not require access to water or power.

Cleaning restrictions

Fabric

- All fabrics react differently to this cleaning process, by not having 100% knowledge of all the fabric that the State of Michigan has purchased, Smart Office Systems will recommend that we discuss the expected result on a cases by case basis.

Laminate surfaces

- No Restrictions.

Painted surfaces

- No restrictions.

APPENDIX L

Clarification Answers for Smart Office Systems

1.223 Re-Fabric / Re-Laminate Services

Re-Fabric services offered

Fabric panels
- Old fabric is removed.
- Acoustical batting is inspected and replaced if worn.
- New fabric is applied using new spline material.

Fabric flipper doors
- Locking mechanism is removed.
- Old t-mold is removed.
- Old fabric is removed.
- New fabric is adhered to the flipper face with water based adhesive.
- New t-mold is applied.
- Locking mechanism is re-installed.

Fabric hanging lateral bin face
- Locking mechanism is removed.
- Old t-mold is removed.
- Old fabric is removed.
- New fabric is adhered to the flipper face with water based adhesive.
- New t-mold is applied.
- Locking mechanism is re-installed.

Tack boards and Fabric handing later bin face
- Old fabric is removed.
- New fabric is adhered to the tack board with water based adhesive on the face and edge, and stapled on the back.

Re-laminate services offered

Videne flipper faces
- Locking mechanism is removed.
- Old t-mold is removed.
- Videne surface is prepped to insure a good bonding surface.
- New laminate is adhered to the flipper face with water based adhesive.
- New Laminate surface is trimmed to the correct size.
- New t-mold is applied and trim to the desired thickness.
- Locking mechanism is re-installed.

Videne hanging lateral bin faces
- Locking mechanism is removed.
- Old t-mold is removed.
- Videne surface is prepped to insure a good bonding surface.
- New laminate is adhered to the lateral bin face with water based adhesive.
- New Laminate surface is trimmed to the correct size.
- New t-mold is applied and trim to the desired thickness.
- Locking mechanism is re-installed.

APPENDIX L

Clarification Answers for Smart Office Systems

T-mold/laminate Work surfaces

- Old t-mold is removed.
- Laminate surface is prepped to insure a good bonding surface.
- New laminate is adhered to the work surface with a water based adhesive.
- New Laminate surface is trimmed to the correct size.
- New t-mold is applied and trim to the desired thickness.

Product lines eligible for the above re-fabric and re-laminate services

- Haworth Uni-group
- Haworth Places
- Herman Miller AO-1
- Herman Miller AO-2
- Westinghouse ASD
- Westinghouse ASD+

1.224 Painting Services

On-site painting services offered

Lateral files

- Storage cabinets
- Shelving

Off-site painting services offered

Panel trim

- End rails
- Top caps
- Kick plates
- Glide/glide housing

Storage

- Shelves
- Shelf ends
- Flipper door hoods
- Lateral bins
- Pedestals
- Task lights

Work surfaces

- Cantilevers

Painting process

On site, State of Michigan provided space or Smart Office Systems provided space.

- Surfaces are hand sanded.
- Surfaces are wiped down to remove any dust or debris.
- Paint is applied electrostatically.

APPENDIX L

Clarification Answers for Smart Office Systems

Offsite, Smart Office Systems Lansing manufacturing facility.

- Surfaces are hand sanded, chemically etched or sand blasted.
- Surfaces are wiped down to remove any dust or debris.
- Painted is applied by the following methods depending on the item.
    - HVLP (High volume low pressure)
    - Electrostatically
    - Powered coated

Product lines eligible for the above re-fabric and re-laminate services

- Haworth Uni-group
- Haworth Places
- Herman Miller AO-1
- Herman Miller AO-2
- Westinghouse ASD
- Westinghouse ASD+

3. Question: Is there a way we can see the Ultra Ship delivery time frames demonstrated?

Answer: The Ultra Quick Ship program was designed specifically for the State of Michigan. It requires SOS to remanufacture 50 work stations in standard sizes and finishes and inventory the product for future use by the State of Michigan. It was our intent, should SOS be the chosen vendor by the State of Michigan to immediately inventory the necessary product to meet this obligation.

4. Question: Do you perform continuity and/or hi pot tests for the electrical retro-fit units?

Answer: Yes, we perform continuity tests.

5. Question: Please submit revised time study hours and corresponding pricing that reflects revised time studies based on the attached conditions.

Answer: Please see tables below.

APPENDIX L

Clarification Answers for Smart Office Systems

3-1.403 PROPOSAL PRICING—INSTALLATION SERVICES

3-1.403.a PROPOSAL PRICING—INSTALLATION SERVICES-INSTALLATION INFORMATION SHEET

REFURBISHED OPEN SPACE OFFICE FURNITURE
INSTALLATION SERVICES INFORMATION SHEET

The **first level** of **INSTALLATION** is when all Refurbished Open Space Office Furniture is going to be ordered and workstations need to be installed. Bidders shall indicate the **INSTALLATION** charges for the order levels and zones indicated below. These charges should be expressed as a percentage (%) to be multiplied by the total net Contract value of the order for the furniture that will be required. Please refer to the attached Appendix E - Zone Map for reference purposes. (See **INSTALLATION** statement in the attached terms and conditions.) Order levels are net product values.

Zone/Order Level	Standard Delivery Program	Express Delivery Program	Rapid Response	Additional % Charge for Premium Service
Zone 1 – Metro Region < $100,000 > $100,000	14.0% 14.0%	14.0% 14.0%	14.0% 14.0%	14.0% 14.0%
Zone 2- University Region < $100,000 > $100,000	12.7% 12.7%	12.7% 12.7%	12.7% 12.7%	12.7% 12.7%
Zone 3 – Southwest Region < $100,000 < $100,000	13.5% 13.5%	13.5% 13.5%	13.5% 13.5%	13.5% 13.5%
Zone 4 – Bay Region < $100,000 > $100,000	14.0% 14.0%	14.0% 14.0%	14.0% 14.0%	14.0% 14.0%
Zone 5 – North Region < $100,000 > $100,000	15% 15%	15% 15%	15% 15%	15% 15%
Zone 6 – Superior Region < $100,000 > $100,000	16.5% 16.5%	16.5% 16.5%	16.5% 16.5%	16.5% 16.5%

APPENDIX L

Clarification Answers for Smart Office Systems

3-1.403.b PROPOSAL PRICING—INSTALLATION SERVICES-INSTALLATION CALCULATION SHEET

INSTALLATION CALCULATION SHEET

Bidders shall indicate below the charge that the state would have incurred had the bidder been required to install the six-workstation cluster on the attached **Appendix F** - "Workstation Cluster". This figure should first be expressed as a percentage (%), taken from the INSTALLATION SERVICES INFORMATION SHEET from the column that represents the Total Bid for Furniture from the Standard Delivery Item Listing and the row representing Zone 2 – University Region, for orders equal to or over $100,000. The percentage should then be multiplied by the Total Bid for Furniture from the Standard Delivery Item Listing. (See ITEM LISTING statement in Terms and Conditions.) Bidders are to also indicate their hourly rate per level of installation multiplied by the hours from the time study for the services indicated below. **Bidders are to also indicate their hourly rate per level of installation multiplied by the hours from the time study for the services indicated below.**

First Level **% for Install Services**		**Total Bid for Furniture From the Standard Item listing**		**Total Amount for INSTALL SERVICES**
12.7%	**X**	**$ 15,624.36**	**=**	**$1,984.29**

First Level **% for Install Services**		**Total Bid for Furniture from the Express Item listing**		**Total Amount for INSTALL SERVICES**
12.7%	**X**	**$ 19,096.44**	**=**	**$2425.25**

Hourly Rate For Second Level		Time Study/Mock-Up		**Total Amount for INSTALL SERVICES**
$ 55.00	**X**	**28** hours	**=**	**$ 1540.00**
Hourly Rate For Third Level		Time Study/Mock-Up		**Total Amount for INSTALL SERVICES**
$ 55.00	**X**	**40 hours**	**=**	**$ 2200.00**

Hourly Rate For Fourth Level		Time Study/Mock-Up		**Total Amount for INSTALL SERVICES**
$ 55.00	**X**	**14.4 hours**	**=**	**$ 792.00**

Hourly Rate For Fifth Level		Time Study/Mock-Up		**Total Amount for INSTALL SERVICES**
$ 55.00	**X**	**22.6 hours**	**=**	**$ 1,243.00**

APPENDIX L Clarification Answers for Smart Office Systems

3-1.403.c PROPOSAL PRICING—INSTALLATION SERVICES-REFUBISH CALCULATION SHEET

REFURBISH SERVICES CALCULATION SHEET

Bidders shall indicate below the charge that the state would have incurred had the bidder been required to perform specified services relating to refurbishing existing furniture. When estimating costs for these services, bidders are to refer to the six-workstation cluster on the attached **Appendix F** - "Workstation Cluster. Bidders are to indicate their hourly rate per level of service multiplied by the hours from the time study for the services indicated below.

Hourly Rate for Clean Service		Time Study		Total Amount for SERVICE
$55.00	**X**	8.5 hours	**=**	**$ 467.50**

Hourly Rate for Re-Fabric Service		Time Study		Total Amount for SERVICE
$35.00	**X**	48 hours	**=**	**$ 1,680.00**

Hourly Rate for Re-laminate Service		Time Study		Total Amount for SERVICE
$35.00	**X**	18.5 hours	**=**	**$ 647.50**
Hourly Rate for Re-Paint Service		Time Study		Total Amount for SERVICE
$35.00	**X**	48.5 hours	**=**	**$ 1,697.50**

Hourly Rate Re-fabric, clean Service		Time Study		Total Amount for SERVICE
$35.00	**X**	51 hours	**=**	**$ 1,785.00**

Hourly Rate Re-fabric, , Re-laminate, clean Service		Time Study		Total Amount for SERVICE
$35.00	**X**	69.5 hours	**=**	**$ 2,432.50**
Hourly Rate Re-fabric, , Re-laminate, re-paint, clean Service		Time Study		Total Amount for SERVICE
$35.00	**X**	115 hours	**=**	**$ 4,025.00**

APPENDIX L

Clarification Answers for Smart Office Systems

*SOS is assuming that the wording used in the Clarification Questions dated March 9, 2006 under Time Study Conditions which states "disassembly and reassembly" refers to "deinstallation and installation". Please refer to 3-1.403.b PROPOSAL PRICING—INSTALLATION SERVICES-INSTALLATION CALCULATION SHEET for these costs.

3-1.403.d PROPOSAL PRICING—INSTALLATION SERVICES-TIME STUDIES
TIME STUDIES

Bidders are to indicate required assembly time required to teardown and install the six (6) workstation cluster drawings included in Appendix F. For evaluation purposes, the State intends to use time studies from bidders based on installing the Haworth Unigroup Line after product is delivered to the site, unboxed, and staged at the final location in the space. However, if bidders are not qualified to install Haworth Unigroup line, please indicate which manufacturer and line you are using for the time study hours. Bidders shall provide a videotape as detailed documentation to support the accuracy of the data. The time submitted by bidders may be utilized as a benchmark. For consistency in evaluation purposes, all bidders should start with installing Workstation 1 continuing through Workstation 6.

Installation Level	Task for 6 Workstation Cluster	Total Hours Required
Level 1, 2, and 3	Installation of 6 stations	28 hrs
Level 3 and 4	Teardown time for 6 stations	14.4 hrs
Level 5	(teardown and re-install 6 stations) Re-configuration only (no furniture added)	22.6 hrs
Grand Total Hours		65 hrs

Bidders are to indicate required time to perform the re-furbishing services below using the six (6) workstation cluster drawings included in Appendix F. The time submitted by bidders may be utilized as a benchmark.

Task for 6 Workstation Cluster	Hours Required	Hourly Wage	Total Cost
Clean (fabric and hard surfaces)	8.5 hrs	$ 55.00	$467.50
Re-fabric (spline provided)	48 hrs	$35.00	$1,680.00
Re-laminate (new t-mold provided)	18.5 hrs	$35.00	$647.50
Re-paint (Paint provided)	48.5 hrs	$35.00	$1,697.50
Re-fabric, clean (Hard surfaces only)	51 hrs	$35.00	$1,785.00
Re-fabric, Re-laminate, and Clean (Hard surfaces only)	69.5 hrs	$35.00	$2,432.50
Re-fabric, Re-laminate, Repaint, and Clean (no cleaning needed)	115 hrs	$35.00	$4,025.00

APPENDIX L

Clarification Answers for Smart Office Systems

6. Question: Do you have ASTM, ANSI/BIFMA certifications on your re-furbished furniture?

Answer: Because the structural integrity and function of the products do not change, ASTM and ANSI/BIFMA certifications remain with the product through the refurbishing / remanufacturing process.

7. Question: Does the combo corner equal split corner? If not, what is a combo corner?

Answer: The combo corner is different than the Split corner. A combo corner is an industry standard term to describe a corner work surface with unequal sides.
Please see drawing below that illustrates a standard combo work surface.

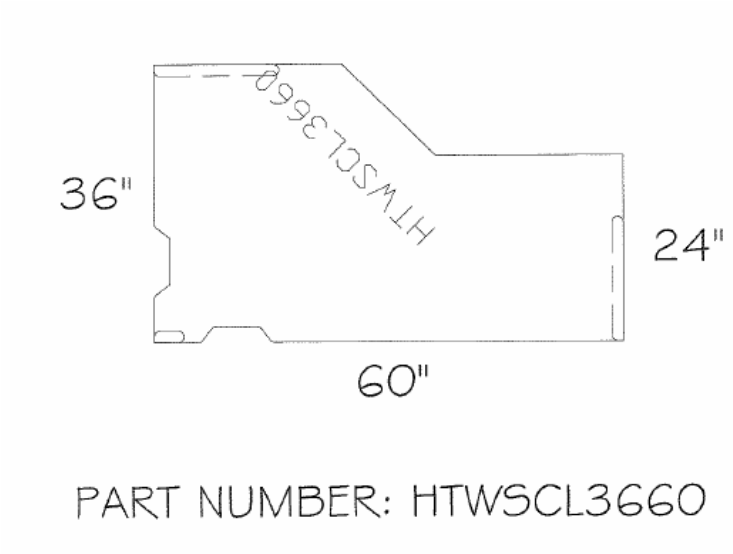

8. Question: Why is S.O.S. charging the State for Premium install services on days they would have to work anyway? (i.e. MLK day, President's Day, Veteran's Day)

Answer: SOS utilized the definition set forth in the ITB. See the below definition as set forth in the ITB, 1.205 Premium Services. SOS will only charge premium services rates for holidays observed by SOS. SOS currently works on MLK Day Presidents Day and Veterans Day.

1.205 PREMIUM SERVICES

Bidders shall include in their proposal information including pricing on design and installation services available for evenings (between 5:00 p.m. and 7:00 a.m.) and weekends (Saturday and Sunday). Premium service charges are only applicable when requested by the State. Premium services are applicable to State holidays which are as follows:

New Year's Day; Martin Luther King Day; Presidents' Day; Memorial Day; Fourth of July; Labor Day; Veterans' Day; Thanksgiving Day; Friday after Thanksgiving; Christmas Eve Day; Christmas Day; and New Year's Eve Day

APPENDIX L

Clarification Answers for Smart Office Systems

9. Question: Why is the Standard delivery on AS-IS Haworth product 35 days? It seems that AS-IS product would not require as long of a delivery time frame.

Answer: The standard delivery time for all products provided by SOS allows SOS the time to properly process the product while incurring the least cost. By minimizing the costs incurred throughout this process, SOS is able to pass these cost savings along to the State of Michigan by providing the deepest discount possible.

10. Question: Please clarify your storage rates:

a) Your proposal states 30 days are free, but the additional information sheet says storage over 7 days is .0183 per sq. ft per day. These two statements are a contradiction.
b) The proposal states storage for over 30 days (long term storage) is .55 per sq. foot/ per month paid on a monthly rate but in another section of the proposal it states over 7 days is .0183 per sq. ft per day. These two statements are a contradiction.

Answer: The proposed storage rate is 30 days free and $.55 per foot per month thereafter as outlined under section 5-1.035 in our proposal.

The Additional Information Sheet required us to bid based on 7 days at a cost per foot per day under that section of the bid.

The monthly rate of $.55 does equal the daily rate of $.0183 and is consistent.

SOS would prefer to commence billing on 30th day instead of the 7th day as we assume the State would prefer as well.

APPENDIX M

FABRIC, TRIM AND WORKSURFACE STANDARDS FOR SMART OFFICE SYSTEMS

FABRIC

Style Code:	3495
Style:	Coastline - 3495
Color Name:	Bluegrass
Color Number:	070
Description:	Spontaneous vertical lines combine with soothing tone-on-tone beach colors for a refined aesthetic.
Application:	Panels/Vertical Surfaces
Content:	100% Recycled Polyester
Width (Inches):	66" useable
Product Construction:	Woven
Warp Ends:	73 +/- 2
Fill Picks:	41 +/- 2
Weight:	12.2 +/- 1.0 oz./linear yard
Terratex:	Yes

Style Code:	3495
Style:	Coastline - 3495
Color Name:	Bluff
Color Number:	040
Description:	Spontaneous vertical lines combine with soothing tone-on-tone beach colors for a refined aesthetic.
Application:	Panels/Vertical Surfaces
Content:	100% Recycled Polyester
Width (Inches):	66" useable
Product Construction:	Woven
Warp Ends:	73 +/- 2
Fill Picks:	41 +/- 2
Weight:	12.2 +/- 1.0 oz./linear yard
Terratex:	Yes

Style Code:	2858
Style:	Lido - 2858 (Formerly 2838)
Color Name:	Padre
Color Number:	052
Description:	The fine texture and colorations of a sandy beach pass smoothly through the fingers. Lido is the name of a famous beach near Venice, Italy.
Application:	Panels/Vertical Surfaces
Content:	100% Recycled Polyester
Width (Inches):	66" useable
Product Construction:	Woven
Warp Ends:	45 +/- 2
Fill Picks:	21 +/- 1
Weight:	11.5 +/- 1.0 oz./linear yard
Terratex:	Yes

WORKSURFACE

Fusion Maple 7909-60

TRIM

Grey Tone

Beige