Implementation Guide

to the

Postsecondary Electronic Standards Council

XML Standard Format

for the

College Transcript

Version 1.2.0

December 4, 2009

Send corrections, comments and requests for the document in MS Word format to:

Tom Stewart
stewartj@aol.com

Table of Contents

Page
v **Introduction**
v **Organization and Format**
x **Development History and Acknowledgments**
xi **Transcript Acknowledgment**
1 **CollegeTranscript**
2 **TransmissionData**
5 .....**Source**
6 ..... ---- **Organization**
10 ..... -----.....**LocalOrganizationID**
11 ..... ---- .....**Contacts**
13 ..... ---- .....-----Address
16 ..... ---- .....-----Phone
18 .....----.....-----FaxPhone
20 ..... ---- .....-----Email
21 ..... ---- .....-----URL
22 .....-----.....**Accreditation**
24 .....**Destination**
25 ..... ---- **Organization**
29 ..... ----- .....**LocalOrganizationID**
30 ..... ---- .....**Contacts**
32 ..... ---- .....-----Address
35 ..... ---- .....-----Phone
37 .....-----.....-----FaxPhone
39 ..... ---- .....-----Email
40 ..... ---- .....-----URL
41 **Student**
43 .....**Person**
46 ..... ---- **Birth**
48 ..... ---- **Name**
50 ..... ---- **AlternateName**
52 ..... ---- **HighSchool**
55 ..... ---- **Contacts**
57 ..... ---- .....**Address**
60 ..... ---- .....**Phone**
62 .....-----.....**FaxPhone**
64 ..... ---- .....**Email**
65 ..... ---- .....**URL**
66 ..... ---- **Gender**
67 .....-----**Residency**
69 ..... ---- **Deceased**
70 .....**AcademicRecord**
72 ..... ---- **School**

Table of Contents

Page
77 ……----…… **LocalOrganizationID**
78 ..... ---- .....**Contacts**
80 ..... ---- .....-----Address
83 ..... ---- .....-----Phone
85 ……-----……----FaxPhone
87 ..... ---- .....-----Email
88 ..... ---- .....-----URL
89 ……-----**StudentLevel**
90 ..... ---- **AcademicAward**
93 ..... ---- .....**AcademicHonors**
94 ..... ---- .....**AcademicAwardProgram**
96 ..... ---- .....-----ProgramSummary
101 ..... ---- .....----- .....GPA
104 ..... ---- .....----- .....AcademicHonors
105 ..... ---- .....**AcademicDegreeRequirement**
106 ..... ---- .....**AcademicSummary**
109 ..... ---- .....-----GPA
112 ..... ---- .....-----AcademicHonors
113 ..... ---- .....-----AcademicProgram
115 ..... ---- **AcademicSummary**
120 ..... ---- .....**GPA**
123 ..... ---- .....**AcademicHonors**
124 ..... ---- .....**AcademicProgram**
126 ..... ---- **AcademicSession**
129 ..... ---- .....**AcademicSessionDetail**
131 ..... ---- .....**School**
135 ……----- ….. ----LocalOrganizationID
136 ..... ---- .....**StudentLevel**
137 ..... ---- .....**AcademicProgram**
139 ..... ---- .....**AcademicAward**
142 ..... ---- .....**Course**
155 ..... ---- .....-----CourseOverrideSchool
159 ……-----….. -----……LocalOrganizationID
160 ..... ---- .....-----Requirement
162 ..... ---- .....-----Attribute
164 ..... ---- .....-----Proficiency
166 ..... ---- .....-----Licensure
167 ..... ---- .....-----LanguageOfInstruction
168 ..... ---- .....**AcademicSummary**
174 ..... ---- .....-----GPA
177 ..... ---- .....-----AcademicHonors
178 ..... ---- .....-----AcademicProgram

Table of Contents

Page
180 ..... ---- **Course**
193 ..... ---- .....**CourseOverrideSchool**
197 ……-----……-----LocalOrganizationID
198 ..... ---- .....**Requirement**
200 ..... ---- .....**Attribute**
202 ..... ---- .....**Proficiency**
204 ..... ---- .....**Licensure**
205 ..... ---- .....**LanguageOfInstruction**
206 ..... ---- **AdditionalStudentAchievements**
208 ..... ---- .....**Requirement**
210 ..... ---- .....**Attribute**
212 ..... ---- .....**Proficiency**
214 ..... ---- .....**Language**
215 ..... ---- .....**Licensure**
216 .....**Health**
217 ..... ---- **Immunizations**
218 .....**Tests**
220 ..... ---- **StudentLevel**
221 ..... ---- **Subtest**
222 ..... ---- .....**TestScores**
224 ***Appendix A – State and Province Codes***
226 ***Appendix B1 – Country Codes (Sorted by Code)***
232 ***Appendix B2 – Country Codes (Sorted by Country Name)***
239 ***Appendix C1 – Language Codes (ISO) (Sorted by Language Code)***
255 ***Appendix C2 – Language Codes (ISO) (Sorted by Language Name)***
273 ***Appendix D – Test Codes and Test Names (Older EDI Version)***
275 ***Appendix E – Test Codes and Test Names (Newer XML Version)***
279 ***Appendix F – Subtest Codes and Subtest Names (Older EDI Version)***
287 ***Appendix G – Subtest Codes and Subtest Names (Newer XML Version)***
290 ***Appendix H – Course Academic Grade Scale Codes***
Appendix I, J & K – Not Used
295 ***Appendix L – Sample XML College Transcript***
308 ***Appendix M – History of Changes to College Transcript Schemas and Implementation Guides***

Introduction

For the higher education community to achieve the timely, uniform, accurate, and secure exchange of the academic records for current and previous postsecondary students, the Postsecondary Electronic Standards Council (PESC) developed and obtained approval for a standard format in eXtensible Markup Language (XML) for the College Transcript. This Implementation Guide describes the approved format for electronically exchangeable postsecondary school records and can help non-technical users to implement the electronic records exchange process.

Besides its obvious use for postsecondary educational institutions, this Guide should also be useful for software vendors and state and federal education agencies.

Postsecondary educational institutions use student transcripts to transmit current and historical student academic records to postsecondary educational institutions and to other education agencies. When a postsecondary student intends to transfer to another postsecondary school, it is essential that the student's academic record be made available to the receiving school as quickly as possible so that the receiving institution can make a faster admissions decision. In addition, the prompt transmission of the student's academic record allows the receiving institution to evaluate the record in a more timely fashion and thereby to advise the student on the applicability of past courses to current program requirements.

The postsecondary student transcript contains personal history and identifying information about the student, the current academic status, dates of attendance, courses completed with grades earned, diplomas and certificates awarded, and selected test scores.

This Implementation Guide is based on the Approved PESC XML College Transcript Schema version 1.2.0. It was officially approved and released in November 2009. It uses the Academic Record Sector Library Version 1.5.0 and Core Main Version 1.8.0. For the electronic exchange of these student records to be completely automated, it is essential that all users adhere strictly to the requirements of this Schema, and understand and comply with the requirements outlined in this Guide. Although not required in the Schema, this Implementation Guide also makes recommendations for acceptable practice based on "The Academic Record and Transcript Guide," a publication by the American Association of Collegiate Registrars and Admissions Officers (AACRAO).

Organization and Format

The schema for the College Transcript is made up of four main parts:

1. Transmission Data
2. Student
3. Note Message
4. User Defined Extensions

However, three of these main parts branch to form other parts, which in turn branch out further. This Guide is organized so that each level of branching is documented in the order as follows:

- Transmission Data Level I
  - Sub-level IA
    - Sub-level IA1
      - Sub-level IA1a
      - Sub-level IA1b
    - Sub-level IA2
      - Sub-level IA2a
      - Sub-level IA2b
  - Sub-level IB
    - Sub-level IB1
      - Sub-level IB1a
- Student Data Level I

  (Etc.)

The heading for each level and sub-level indicates the position of the subsequent diagram in the larger Schema.

Following the heading, the diagram serves to illustrate its relationship with the preceding branch. All diagrams in this Guide were copied from a graphical representation of the College Transcript Schema using a software package from Altova Corporation called XMLSpy.

Example:

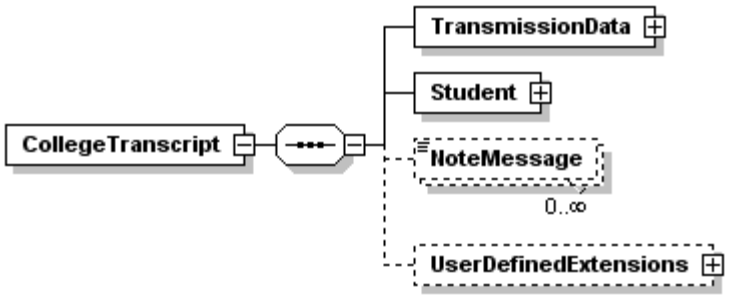

The boxes in the diagrams can illustrate two separate components of the Schema. First, certain boxes show data element groupings, which branch out to form lower-level data element groupings. Other boxes show the Schema's other primary component, the fields that contain actual data. A box with a solid border indicates that that particular data element or field is required. A box with a dotted line indicates an optional data element or field. Likewise, a solid line connecting two or more boxes indicates that the boxes to the right in the diagram are required fields and a dotted line indicates the fields in the boxes to the right are optional. A plus (+) sign at the right of a box indicates that the element grouping or field branches beyond the scope of a given diagram. The Schema displays such branching in subsequent diagrams.

Each diagram includes a representation of a field or data element's repeatability. Under a given box, for example, "0...∞" would indicate an optional data element or field (with a minimum number of occurrences of zero) that can be repeated an infinite number of times. On the other hand, "1...3" would indicate a mandatory field (with at least one required instance) that can be repeated up to 3 times.

Although most data elements that could theoretically be included an infinite number of times in the schema, would typically only be included once or perhaps a few times. Including a high number of occurrences of a field would present problems for the receiving agency or institution.

Under each diagram, a table will appear with five columns:

> **Tag Name:** This is the name of the data element grouping or field that will appear in the Schema and in the instance document. ("Instance document" refers to a transcript with real data for an actual student that institutions would exchange.) The format for the tag name is Upper Camel Case which takes a name such as "Transmission Data" and eliminates the space between the two words, retaining the capital letters of each word making up the tag name.
>
> **Schema Use:** This column indicates whether the data element or field is required or optional in the instance document. If a required field is not included in the instance document, the transcript will normally be rejected by the receiving institution or agency's computer program (XML Parser). This column will also include a notation (Repeatable) if a data element (field) can be sent multiple times.

Description: This is a brief description of the data included with a particular XML tag name. The description normally comes from the description in the Core Main Schema for data elements.

Recommended Use: This column reflects recommendations from the developers of the College Transcript Schema, standards of good practice as defined by the AACRAO Transcript Guide, and generally recommended practices for exchanging electronic transcripts. Reaching consensus on the recommended use of data elements and fields has grown into an additional task for the PESC Workgroup.

Recommendations in this column generally match the standards in Schema Use, especially if Schema Use shows an element or field as "Required." However, a component listed as "Optional" under Schema Use may be listed as "Recommended" in Recommended Use if the Workgroup regards the element or field as essential and in keeping with good practices in the AACRAO community.

Required: Indicates that a sending institution must include the data element or field in its transmission since it is required by most schema parsers.

Recommended: If the information for a field is readily available at the sending school, then 'Recommended' indicates that the field should be sent.

Conditional: This recommended use does not occur often in this Guide, but it may occur when the recommendation (recommended, optional or not recommended) is dependent on another data element being sent, or even on the value of another data element that is sent.

Optional: Indicates that it is generally up to the sender to include the data or not. If a paper transcript normally includes the element or field, then the sender will probably choose to include it. In addition, within certain states, items marked as "Optional" may be essential for intrastate exchanges. Finally, it may be the case that a destination school receives all data at a single location; in such a case, the sender may need to provide optional elements to identify the specific intended recipient.

Not Recommended: Indicates that, in the view of the Workgroup, such a data element or field should not form part of a transmission. In general, the Workgroup recommends that institutions not send notes or comments, since most Student Information System programs cannot automatically process them. Sending these elements could thereby slow or impede automatic processing by the receiving school. However, exceptions to this rule-of-thumb may lie in the needs of individual states, as certain intrastate transmissions may require information that only a note or comment field can accommodate. In such cases, the Workgroup recommends that institutions in the state develop a protocol for maintaining and transmitting the element or field. In other cases, common practice may be to include data that is not recommended by the Workgroup.

In many cases, because of the reusability of complex data elements in XML, there are data elements included in this schema that may not be appropriate for use in the College Transcript. In these cases, the recommended use may be designated as "Not Recommended."

Format: This column shows the minimum and maximum number of occurrences of the data element. It also shows the minimum and maximum length allowable for a field, if that field does not have enumerated values and is not a special type of field, such a date field.

"**minOcc** 1" indicates a required field, since it must have at least one occurrence in the instance document. "minOcc 0" indicates an optional field.

"**maxOcc**" followed by a number or symbol specifies the maximum number of times that an element can recur in an instance document at a particular position. For example, "maxOcc 5" would indicate that the field may occur no more than 5 times in a given position of the instance document. "maxOcc ∞**"** indicates that a field may recur an unlimited number of times in the instance document. However, the use of an excessive number of occurrences puts a burden on the receiving agency or institution, so they should always be limited to the fewest number possible.

"**minLength**" indicates the minimum number of characters that a field must contain, while "**maxLength**" indicates the maximum number of characters that a field may contain.

"Enumerations" is used to list the allowable values that may be used in the instance document. They must be used exactly as shown in this column. When the values are enumerated in this column, "minLength" and "maxLength" will not be indicated and are not appropriate.

"**DateTime**" always uses the same format: ccyy-mm-ddThh:ii:ss(+GMT). An example would be "2005-11-20T08:15:36(+7)". Likewise, "Date" always uses the format "ccyy-mm-dd". An example would be "2005-11-20". If either DateTime or Date is used, then "minLength" and "maxLength" will not be indicated.

"**xs:decimal**" indicates a numeric field. It has a maximum length of 18 characters including a decimal if the decimal point is explicitly included. Typical values would be (1) a grade point average of "3.250"; (2) credits earned of "24"; or (3) credits included in GPA of "16".

"**minInclusive**" indicates the lowest value of a decimal type field that can be included, while "**maxInclusive**" indicates the maximum value that can be included in a decimal type field. "**totalDigits**" indicates the maximum number of digits that can be used in the specified field.

Comments: The Guide may include comments beneath the rows of a given table and/or at the end of the table. The Workgroup intends for these comments to provide further explanation for the items displayed above the comment.

Code Illustration: Below each table, the Guide includes a snippet of what that portion of an instance document might look like in XML format. If the data element is a required data element for the schema, then that data element will be in **bold** type.

If the code is illustrating a complex data element that will be further explained on a subsequent page, then only the opening and closing tags will be included. For example:

```
<Course>

</Course>
```

If the code is illustrating a simple data element that is not recommended for inclusion, then an empty tag mayl be included for this particular Code Illustration. For example:

```
<NoteMessage/>
```

Appendix L shows an example of an XML Schema for a college transcript. This example is not intended to match the Code Illustrations throughout the Guide, since a typical transcript would not include many of the optional sections of the Schema.

Order of Including Data Elements: Although the Schema includes many optional data elements and you may choose not to include them in an instance document, if you do include data elements, they must appear in the same order they appear in the Schema.

NoteMessage: You will find "NoteMessage" appearing throughout the Schema. This Guide almost always recommends against the routine use of note messages. Unless there is an agreed upon format for a note message between the sender and the receiver, notes cannot be interpreted and automatically processed by the receiver's computer. Although not required by the schema, it is strongly recommended, for example, that if the note message is only appropriate for schools in a given state or province, that the first two digits of the text of the note message be the two digit code for that state or province. That will allow recipient schools or agencies in a state or province to query these two digits and immediately ignore it, if it refers to another state or province.

UserDefinedExtensions: The user-defined extension (UDE) design pattern is intended to address situations in which the current Schema does not accommodate sender-specific data. The Schema has to allow for additional elements that may be defined and used at a later date. The user-defined extensions pattern serves as a placeholder for these to-be-defined fields and elements. However, it can require that these fields be defined in a Schema by the organization that wants to use the extensions area. Senders should take care not to use the user-defined extensions as a fall-back for doing appropriate research and design. They should only use the extension when in actuality, the organization defining the base Schema cannot define the additional elements that other organizations may need. Furthermore, other recipients not interested in the data these specific organizations want to exchange in the user-defined area, may then just ignore the UDE.

In general, the use of NoteMessage is recommended to exchange smaller, uncomplicated data pertaining to a state or province, while UserDefinedExtensions should be reserved for much more complicated amounts of structured data.

User-defined extensions are beneficial when both the sending and receiving institutions agree on their use. For best work practice, the Workgroup recommends the use of user-defined extensions in the following scope:

- Mutually defined sub-schemas: For the transmittal and receipt of data agreed upon by both sending and receiving institutions;
- State systems: In the California CSU system, this might be the General Education requirements; For the University of California system, this would be the UC requirements;
- Regional requirements

The benefit of using the user-defined extensions stems primarily from the open nature of the XML design. Institutions may take advantage of XML's openness, use the user-defined extensions to accommodate data for which the original Schema has not accounted, and standardize the use of the extensions among themselves. Such institution-to-institution agreements allow for the following:

- Strict standardization among institutions through design and implementation agreements,
- Ability of users outside of the agreement to ignore the data contained in the user-defined extensions.

Because the Schema recommends that institutions develop their own agreements for the use of user-defined extensions, the Workgroup also recommends against the development of national standards.

Example Code:

```
<UserDefinedExtensions>
    <YearTerm>20042</YearTerm>
    <CourseAbbrev>ENG</CourseAbbrev>
    <CourseNumb>0114</CourseNumb>
    <SectNumb>02</SectNumb>
</UserDefinedExtensions>
```

Please reference Excerpt from PESC Guidelines for XML Architecture and Data Modeling Version 3.0 on the PESC web site at www.pesc.org for a full explanation on the usage of user-defined extensions.

Development History and Acknowledgments

The American Association of Collegiate Registrars and Admissions Officers (AACRAO) Committee on the Standardization of Postsecondary Education Electronic Data Exchange (SPEEDE) began working on a national standard format for the electronic exchange of postsecondary student records in 1989. Initially the work of the committee was funded by AACRAO. At about the same time, the US Department of Education's National Center for Education Statistics (NCES) began developing a national standard format for the electronic exchange of student records for kindergarten through high school students. The K12 community was primarily represented by the Council of Chief State School Officers (CCSSO). To gain more credibility in the creation and widespread adoption of the standards, the two groups (AACRAO and NCES) approached the American National Standards Institute's (ANSI) Accredited Standards Committee (ASC) X12 for assistance in developing and approving the two standard formats.

ASC X12 reviewed the two proposals and insisted that only one standard be developed and approved. That standard would be the Kindergarten through Postsecondary Education Student Record. At that time, NCES decided to fund the travel of the AACRAO SPEEDE Committee as well as those working on the K-12 standard. The ASC X12 Standard in the Electronic Data Interchange (EDI) format was approved in the early 1990's as ANSI ASC X12 Transaction Set 130 for the Student Educational Record (Transcript).

During this time period (before the Internet was widely available), the format stressed the transmission of as much data as possible using the fewest characters. This emphasis emerged because transmission costs were based on the number of characters or bytes being sent over the Value Added Electronic Networks (VANs).

The ASC X12 Standard is now in use by a significant number of postsecondary institutions in the United States and Canada. Over 750,000 transcripts (mostly postsecondary) are exchanged electronically in the EDI format through the University of Texas at Austin SPEEDE Server in the ASC X12 EDI format each year. In addition, the state of Florida maintains a server operated by the Florida Information Resource Network (FIRN). FIRN processes over 750,000 high school and college transcripts each year in its proprietary format, but reformats them in the ANSI ASC X12 TS130 format for exchanges out of the state. Iowa and Maryland also have significant exchanges of electronic student transcripts.

The number of transcripts exchanged electronically in the ASC X12 EDI format continues to grow significantly (about 22% this year). However, the education community felt that an alternative format should be explored. In the view of many, the perceived complexity of implementing the EDI standards was one of the reasons that many schools did not use the EDI format.

The Postsecondary Electronic Standards Council (PESC) commissioned this exploration by creating the XML Forum. The Forum had as its primary purpose to determine if an XML format might result in significantly increased electronic exchange of students' education records.

The wide and inexpensive availability of XML software tools and the already existing and pervasive use of XML by many schools' information technology staffs made the XML process appear to have a much better chance of rapid acceptance and implementation by postsecondary educational institutions.

The early efforts of the XML Forum emphasized the creation of standard reusable core components. Once the Forum made significant progress with this work, PESC agreed to develop an XML Standard Format for the College Transcript to demonstrate that this could be done.

Bruce Marton from the University of Texas at Austin headed this effort and received the bulk of his support from the AACRAO SPEEDE Committee that had developed the earlier EDI standard.

PESC approved the XML standard for the College Transcript (Version 1.0.0) in May 2004.

Transcript Acknowledgment

A significant benefit of the electronic exchange of student transcripts over the exchange of paper documents is enhanced security. With desktop or notebook computers, readily available desktop publishing software, and inexpensive ink jet and laser printers, it is now quite easy for a student or other person to intercept a paper transcript after it is issued by the sending school, make alterations in the document, or create an entirely new paper transcript for the purported student, and forward it on the recipient school, parent, sponsor, employer or prospective employer as an official transcript. Official envelopes for the sending school can also easily be printed as can seals and official looking stamps. Policies of some schools to accept hand-carried transcripts, makes this abuse even easier.

The nature of the exchange of electronic transcripts through a secure Internet server such as the free server provided by the University of Texas at Austin made security far superior to paper exchanges.

By consistent use of the PESC XML Transcript Acknowledgment Schema, this security is enhanced even more. By sending an XML Transcript Acknowledgment Instance Document back to the known electronic address of the school that is identified as the sending school of the transcript, then a security breach can be identified (if that transcript did not come from the school identified as the source of that electronic transcript).

This revision (Version 1.2.0) of the Implementation Guide was created primarily to provide an updated set of test and subtest codes. However, a more complete and detailed list of changes made to the schema from Version 1.0.0 is included in Appendix M.

About Versions: The first digit of the version indicates a major change to the schema. A change in the first digit indicates that the newer schema is not backwardly compatible with earlier versions. A change in the second digit indicates a minor change to the schema. A change in the second digit (and not the first digit) indicates that the newer schema is backwardly compatible with the previous version. A change in the third digit only indicates a micro change from the previous schema and it is compatible with the previous version. If no change is made to the schema, but only one or more changes to the documentation, e.g., the Implementation Guide, then an alpha suffix will be used to denote a documentation change only.

College Transcript

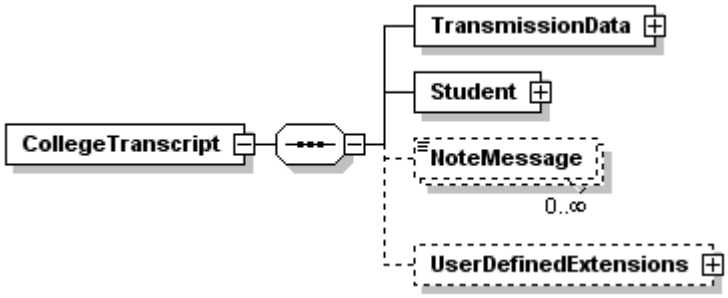

Tag Name	Schema Use	Description	Recommended Use	Format
TransmissionData	Required	Routing and header information	Required	minOcc 1 maxOcc 1
Comment: *This complex data element will be further expanded and explained on page 2 which follows.*				
Student	Required	Body of document. One segment per student	Required	minOcc 1 maxOcc 1
Comment: *This complex data element will be further expanded and explained on page 41 which follows.*				
NoteMessage	Optional Repeatable	Additional information about transcript	Not recommended	minOcc 0 maxOcc ∞ minLength 1 maxLength 80
Comment: *Although NoteMessage occurs frequently throughout this schema and Implementation Guide, it is almost always Not Recommended for inclusion. Of course, this is because it cannot normally be automatically processed by the receiving school's or agency''s computer system. It may be recommended in some cases where a state or agency has established structured formats so that the receiving school's or agency's computer can process it automatically.*				
UserDefinedExtensions	Optional	Additional structured information. Requires mutually defined XML schema.	Optional	minOcc 0 maxOcc 1
Comment: *The College Transcript Schema can only contain information about one student. However, you can include instance documents for multiple students by using the PESC Schema for the Academic Record Batch Submittal which is available on the PESC web site at www.PESC.org.*				

Code illustration:

```
<?xml version="1.0" encoding="UTF-8"?>
<!—Sample XML file generated by XMLSpy v2010 (http://www.altova.com)-->
<HSTrn:CollegeTranscript xmlLns:ColTrn="urn:org:pesc:message:CollegeTranscript:v1.2.0"
xmlns:AcRec="urn:org:pesc:sector:AcademicRecord:v1.5.0"
xmlns:core="urn:org:pesc:core:CoreMain:v1.8.0"
xmlns:xsi="http://www.w3.org/2001/XMLSchema-instance"
xsi:schemaLocation="urn:org:pesc:message:CollegeTranscript:v1.2.0
CollegeTranscript_v1.2.0.xsd">
    <TransmissionData>

    </TransmissionData>
    <Student>

    </Student>
    <NoteMessage/>
    <UserDefinedExtensions/>
</ColTrn:CollegeTranscript>
```

TransmissionData

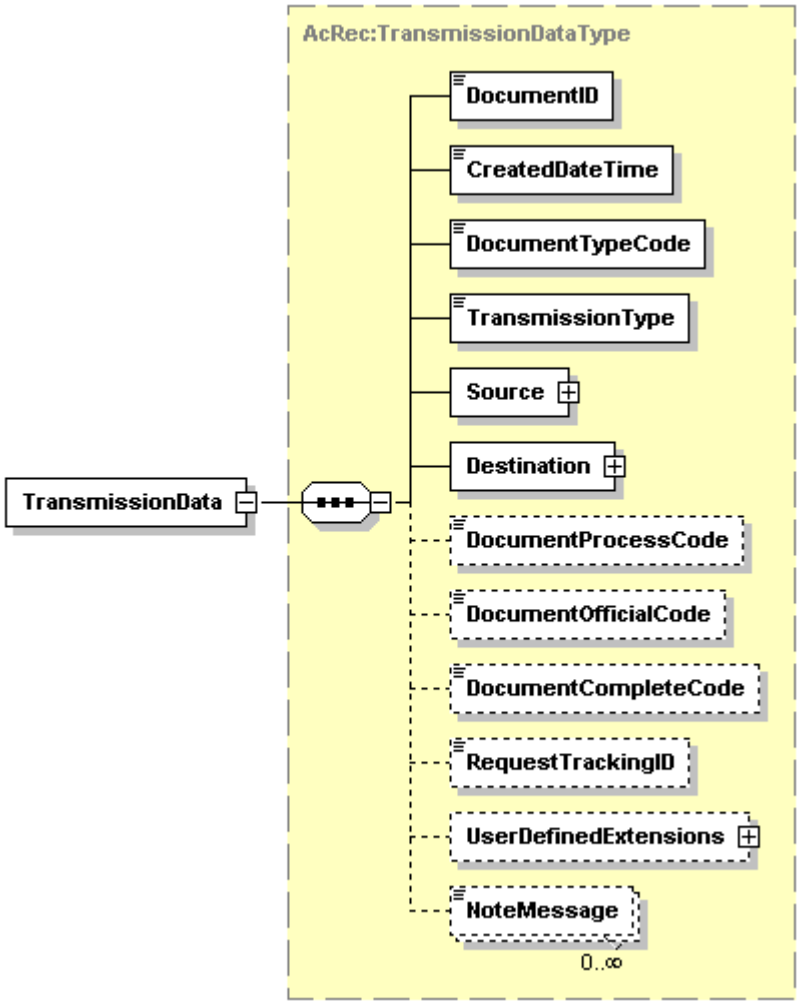

Tag Name	Schema Use	Description	Recommended Use	Format
DocumentID	Required	The File Transmission Date and Time stamp with additional unique qualifying characters	Required	minOcc 1 maxOcc 1 minLength 1 maxLength 35
Comment: *The structure of the DocumentID is up to the sender. However, the general practice is that it include the date and time plus other identifying data.*				
CreatedDateTime	Required	The Date and Time stamp when the document was created	Required	minOcc 1 maxOcc 1 xs:datetime ccyy-mm-ddThh:ii:ss{+-GMT]

Tag Name	Schema Use	Description	Recommended Use	Format
DocumentTypeCode	Required	Type and purpose of document being transmitted	Required	minOcc 1 maxOcc 1 **Enumerations:** Change InstitutionRequest RequestedRecord StudentRequest TermEnroll TermGrade ThirdPartyRequest
Comment: *"Change" would be an appropriate value if the transcript had previously been sent and this is a corrected or updated transcript. "Institution Request" would be appropriate if this transcript is being sent at the request of a postsecondary institution to which the student has applied for admission. "Term Enroll" and "Term Grade" would not be typical values for this data element.*				
TransmissionType	Required	The nature of the transmission	Required	minOcc 1 maxOcc 1 **Enumerations:** Original Replace Duplicate Resubmission Reissue MutuallyDefined
Source	Required	This field is required and essential to indicate the source of the Transcript being sent. It is normally the sending school where the student enrolled for courses.	Required	minOcc 1 maxOcc 1
Comment: *This complex data element will be expanded on page 5 which follows.*				
Destination	Required	This field is mandatory and essential to indicate the destination or recipient of the transcript being sent.	Required	minOcc 1 maxOcc 1
Comment: *This complex data element will be expanded on page 24 which follows.*				
DocumentProcessCode	Optional	This element indicates a TEST or PRODUCTION document	Required if "TEST"; "PRODUCTION" implied, not recommended	minOcc 0 maxOcc 1 **Enumerations:** TEST PRODUCTION
Comment: *If a test transcript is being sent as part of the implementation testing process, or to identify a problem, then this data element would be included with the value "TEST". If this is not the case and this is a normal official transcript being sent, then this data element would not be included in the instance document.*				
DocumentOfficialCode	Optional	This element indicates if the document is unofficial. Unofficial documents may be produced for reference purpose but may not be binding.	Required if Unofficial; "Official" implied, not recommended	minOcc 0 maxOcc 1 **Enumerations:** Official Unofficial
Comment: *With paper transcripts, it is normal practice for the recipient to decide if the transcript received is to be considered official or unofficial. With electronic transcripts exchanged through a secure process such as the University of Texas at Austin SPEEDE Server, most recipients would consider them official. In some states, based on a prior agreement, some optional data elements that are not sent for official transcripts may be included in unofficial transcripts. If this is a normal official transcript being sent, then this data element would not be included in the instance document.*				

Tag Name	Schema Use	Description	Recommended Use	Format
DocumentCompleteCode	Optional	This element indicates whether the document conveys a complete record. Partial documents may be produced for information that is recorded in multiple media or formats. If the student is still enrolled at the school, but the record being sent includes all the available information to date for that student, then the record would be considered complete, and this data element would not be included in the transcript. A value of Partial generally means that the remainder will be sent in hard copy.	Required if not complete; "Complete" is implied, not recommended	minOcc 0 maxOcc 1 **Enumerations:** Partial Complete
RequestTrackingID	Optional	The unique ID associated with a request action that is returned to the requestor for document matching and tracking.	Optional	minOcc 0 maxOcc 1 minLength 1 maxLength 35
NoteMessage	Optional Repeatable	Additional information about transmission	Not recommended	minOcc 0 maxOcc ∞ minLength 1 maxLength 80

Code illustration:

```
<TransmissionData>
    <DocumentID>2009-10-12 - 2316139</DocumentID>
    <CreatedDateTime>2009-10-12T09:30:47-05:00</CreatedDateTime>
    <DocumentTypeCode>RequestedRecord</DocumentTypeCode>
    <TransmissionType>Original</TransmissionType>
    <Source>

    </Source>
    <Destination>

    </Destination>
    <DocumentProcessCode/>
    <DocumentOfficialCode/>
    <DocumentCompleteCode/>
    <RequestTrackingID/>
    <NoteMessage/>
</TransmissionData>
```

TransmissionData.Source

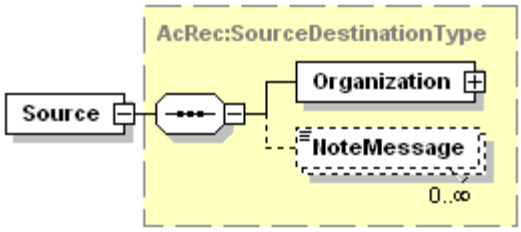

Tag Name	Schema Use	Description	Recommended Use	Format
Organization	Required	Non-person entity such as Organization, Institution, Agency or Business.	Required	minOcc 1 maxOcc 1
Comment: *This complex data element will be expanded on page 6 which follows.*				
NoteMessage	Optional Repeatable	Additional information about the Source of the document	Not recommended	minOcc 0 maxOcc ∞ minLength 1 maxLength 80
Comment: *This gives information about the sending or source school or agency.*				

Code illustration:

```
<Source>
    <Organization>

    </Organization>
    <NoteMessage/>
</Source>
```

TransmissionData.Source.Organization

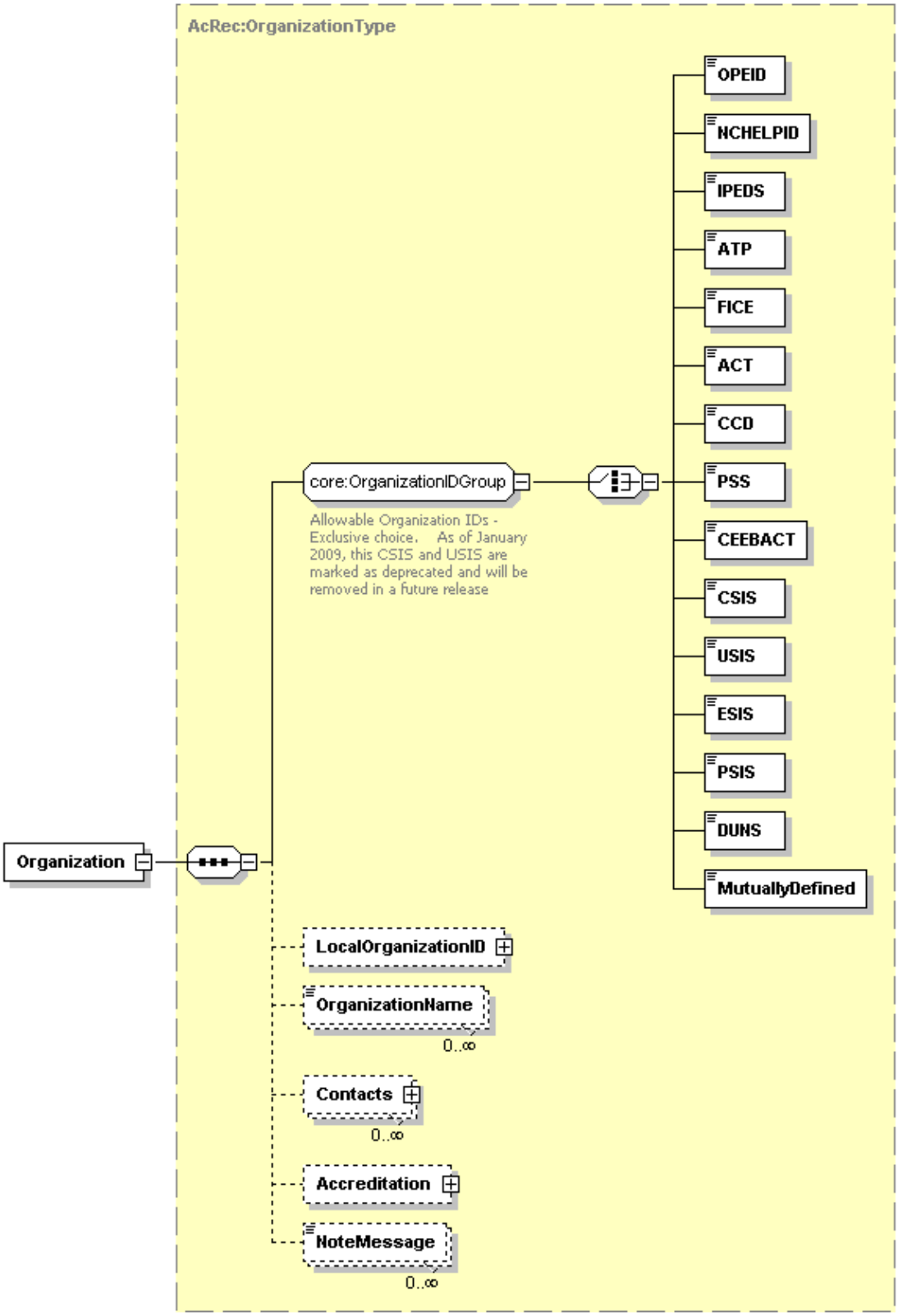

TransmissionData.Source.Organization (Continued)

Tag Name	Schema Use	Description	Recommended Use	Format
[OrganizationIDGroup]	Required	Allowable Organization IDs - Exclusive choice	Required	minOcc 1 maxOcc 1
Comment: *[OrganizationIDGroup] is not an XML tag and does not appear in an instance document. It requires the choice of one and only one of the following code set tags to identify the institution/organization.*				
OPEID	Required choice	The unique identifier assigned by the Office of Postsecondary Education for each data exchange partner.	Recommended choice	minOcc 0 maxOcc 1 minLength 3 maxLength 8
NCHELPID	Required choice	The unique identifier assigned by National Council on Higher Education Loan Programs for each data exchange partner.	Not Recommended	minOcc 0 maxOcc 1 minLength 3 maxLength 8
Comment: *The NCHELPID would not normally be an appropriate choice in this case since transcripts are not normally generated by the financial aid world.*				
IPEDS	Required choice	The unique identifier for Integrated Postsecondary Education Data System assigned by the National Center for Education Statistics for each postsecondary data exchange partner.	Recommended choice	minOcc 0 maxOcc 1 minLength 6 maxLength 6
ATP	Required choice	The unique identifier for the Admissions Testing Program assigned by the College Board for each data exchange partner.	Recommended choice	minOcc 0 maxOcc 1 minLength 6 maxLength 6
FICE	Required choice	The unique identifier once maintained for the Federal Interagency Committee on Education by the National Center for Education Statistics for each postsecondary data exchange partner.	Recommended choice	minOcc 0 maxOcc 1 minLength 6 maxLength 6
Comment: *Although the FICE code set is still widely used by many postsecondary institutions, it has not been maintained by NCES or anyone else since late in the last century. Therefore, codes for new institutions created since then have been locally assigned and cannot be relied upon.*				
ACT	Required choice	The unique identifier for postsecondary educational institutions assigned by American College Testing available at www.act.org	Recommended choice	minOcc 0 maxOcc 1 minLength 4 maxLength 4
CCD	Required choice	The unique identifier assigned by National Center for Education Statistics as the Common Core of Data for each data exchange partner.	Not Recommended	minOcc 0 maxOcc 1 minLength 12 maxLength 12
Comment: *The CCD Is not a recommended choice to identify postsecondary school senders.*				
PSS	Required choice	The unique identifier assigned by the US Department of Education's National Center for Education Statistics for private K12 schools in the US.	Not Recommended	minOcc 0 maxOcc 1 minLength 8 maxLength 8
Comment: *The PSS Is not a recommended choice to identify postsecondary school senders.*				

Tag Name	Schema Use	Description	Recommended Use	Format
CEEBACT	Required choice	The unique identifier assigned by the College Entrance Examining Board and ACT for each K-12 data exchange partner.	Not Recommended	minOcc 0 maxOcc 1 minLength 6 maxLength 6
Comment: *The CEEBACT code set is not a recommended choice to identify postsecondary school senders.*				
CSIS	Required choice	The unique identifier assigned by the Statistics Canada Canadian College Student Information System for each college data exchange partner.	Not Recommended	minOcc 0 maxOcc 1 minLength 6 maxLength 6
Comment: *Since this code set has been used to identify colleges in Canada, it is not a recommended choice for postsecondary schools in the United States. This code set was replaced by a new code set (PSIS) included below.*				
USIS	Required choice	The unique identifier assigned by the Statistics Canada University Student Information System for each university data exchange partner.	Not Recommended	minOcc 0 maxOcc 1 minLength 6 maxLength 6
Comment: *Since this code set has been used to identify universities in Canada, it is not a recommended choice for postsecondary schools in the United States. This code set was replaced by the new code set PSIS included below.*				
ESIS	Required choice	The unique identifier assigned by the Statistics Canada Enhanced Student Information System for each data postsecondary exchange partner.	Not Recommended	minOcc 0 maxOcc 1 minLength 8 maxLength 8
Comment: *The ESIS number would not be a normal choice to identify the sending postsecondary school that created a transcript in the United States. However, it was used to identify a postsecondary school in Canada. This code set was replaced by the new code set PSIS included below.*				
PSIS	Required choice	The unique identifier assigned by the Statistics Canada Postsecondary Student Information System for each data exchange partner.	Optional choice	minOcc 0 maxOcc 1 minLength 8 maxLength 8
Comment: *The PSIS number would not be a normal choice to identify the sending postsecondary school that created a transcript in the United States. However, it would be used to identify a postsecondary school in Canada.*				
DUNS	Required choice	Data Universal Numbering System (DUNS), unique nine character company identification number issued by Dun and Bradstreet Corporation.	Not Recommended	minOcc 0 maxOcc 1 minLength 9 maxLength 9
Comment: *The DUNS number would not be a normal choice to identify the sending school that created a Postsecondary Transcript.*				
MutuallyDefined	Required choice	This code set could be used by a selected set of trading partners if none of the other above code sets is appropriate.	Optional choice	minOcc 0 maxOcc 1 minLength 1 maxLength 60
Comment: *If a College Transcript is being sent by a school or agency that does not have a valid code in one of the other above code sets, and if that code and code set are recognized by the recipient, then this code set might be used for a set of limited exchange partners.*				
Comment: *End of OrganizationIDGroup choice set tags*				
LocalOrganizationID	Optional	A code set typically used by a state, province or region to identify the sending school.	Optional	minOcc 0 maxOcc 1
Comment: *This complex data element will be expanded on page 10 which follows.*				

Tag Name	Schema Use	Description	Recommended Use	Format
OrganizationName	Optional Repeatable	Name of Non-person entity such as Organization, Institution, Agency or Business.	Recommended	minOcc 0 maxOcc ∞ minLength 1 maxLength 60
Comment: *This is the name of the sending postsecondary school.*				
Contacts	Optional Repeatable	To identify a person or an office at the sending school or agency to which administrative communications should be directed	Recommended	minOcc 0 maxOcc ∞
Comment: *This complex data element will be further explained and expanded on page 11 which follows.*				
Accreditation	Optional	To provide information about the accrediting body that has certified the sending school.	Recommended	minOcc 0 maxOcc 1
Comment: *This complex data element will be further explained and expanded on page 22 which follows.*				
NoteMessage	Optional Repeatable	Additional information about the organization	Not recommended	minOcc 0 maxOcc ∞ minLength 1 maxLength 80

TransmissionData.Source.Organization (Continued)

Code illustration:

```
<Organization>
    <FICE>123456</FICE>
     <LocalOrganizationID>

     </LocalOrganizationID>
    <OrganizationName>Southwestern University</OrganizationName>
    <Contacts>

    </Contacts>
    <Accreditation>

    </Accreditation>
    <NoteMessage/>
</Organization>
```

TransmissionData.Source.Organization.LocalOrganizationID

Note: Although the complex data element LocalOrganizationID is an optional data element, if you choose to send LocalOrganizationID, then you must send both LocalOrganizationIDCode and also LocalOrganizationIDQualifier.

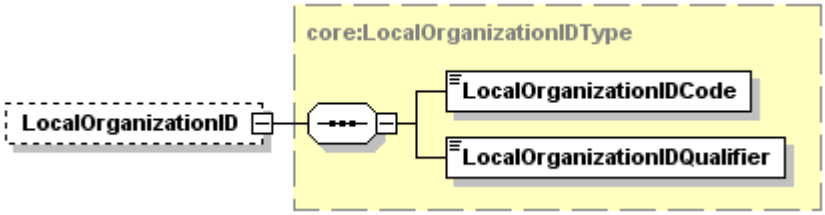

Tag Name	Schema Use	Description	Recommended Use	Format
LocalOrganizationIDCode	Required	The code assigned for the sending school by the state, province or other mutually defined agency specified in the LocalIDQualifier that follows.	Required	minOcc 1 maxOcc 1 minLength 1 maxLength 35
Comment: *This is a required data element only if the Local Organization ID complex data element is sent. This is typically the administrative school code assigned by a state or province to specifically identify the sending school in that state*				
LocalOrganizationIDQualifier	Required	This is the state, province or other mutually definded agency that assigned the Local D Code above.	Required	minOcc 1 maxOcc 1 **Enumerations:** See Code Set in Appendix A
Comment: *This is a required data element only if the Local Organization ID data element is sent. This is typically the state or province that assigned the code to specifically identify the sending school in that state*				

Code illustration:

```
<LocalOrganizationID>
        <LocalOrganizationIDCode>2237901002</LocalOrganizationIDCode>
        <LocalOrganizationIDQualifier>TX</LocalOrganizationIDQualifier>
</LocalOrganizationID>
```

TransmissionData.Source.Organization.Contacts

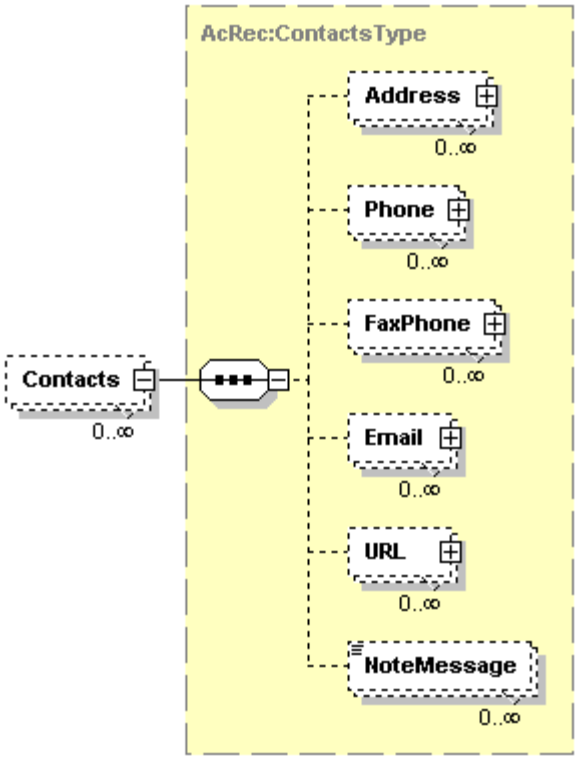

Tag Name	Schema Use	Description	Recommended Use	Format
Address	Optional Repeatable	This is a combined Address Group for a choice between Domestic or International	Recommended	minOcc o maxOcc ∞
Comment: *This complex data element will be expanded on page 13 which follows.*				
Phone	Optional Repeatable	Phone number of source institution contact	Recommended	minOcc o maxOcc ∞
Comment: *This complex data element will be expanded on page 16 which follows.*				
FaxPhone	Optional Repeatable	Fax phone number of source institution contact	Recommended	minOcc o maxOcc ∞
Comment: *This complex data element will be expanded on page 18 which follows.*				
Email	Optional Repeatable	Email address of source institution contact	Recommended	minOcc o maxOcc ∞
Comment: *This complex data element will be expanded on page 20 which follows.*				
URL	Optional Repeatable	The Uniform Resource Locator of source institution	Optional	minOcc o maxOcc ∞
Comment: *This complex data element will be expanded on page 21 which follows.*				

Tag Name	Schema Use	Description	Recommended Use	Format
NoteMessage	Optional Repeatable	Additional information about the contacts at the source institution	Not recommended	minOcc o maxOcc ∞ minLength 1 maxLength 80
Comment: *This is contact information included by the sending school to indicate the preferred means for the receiving school to contact the sending school in case there is a need for further communication. This is the only place in the instance document to include the name, address and contact information about the school that is sending the transcript.*				

TransmissionData.Source.Organization.Contacts (Continued)

Code illustration:

```
<Contacts>
    <Address>

    </Address>
    <Phone>

    </Phone>
    <FaxPhone>

    </FaxPhone>
    <Email>

    </Email>
    <URL>

    </URL>
    <NoteMessage/>
</Contacts>
```

TransmissionData.Source.Organization.Contacts.Address

Note: Although the complex data element Address is an optional data element, if you choose to send the Address of Contacts at the Source Institution, then you must send AddressLine and City and also StateProvinceCode, and PostalCode OR CountryCode.

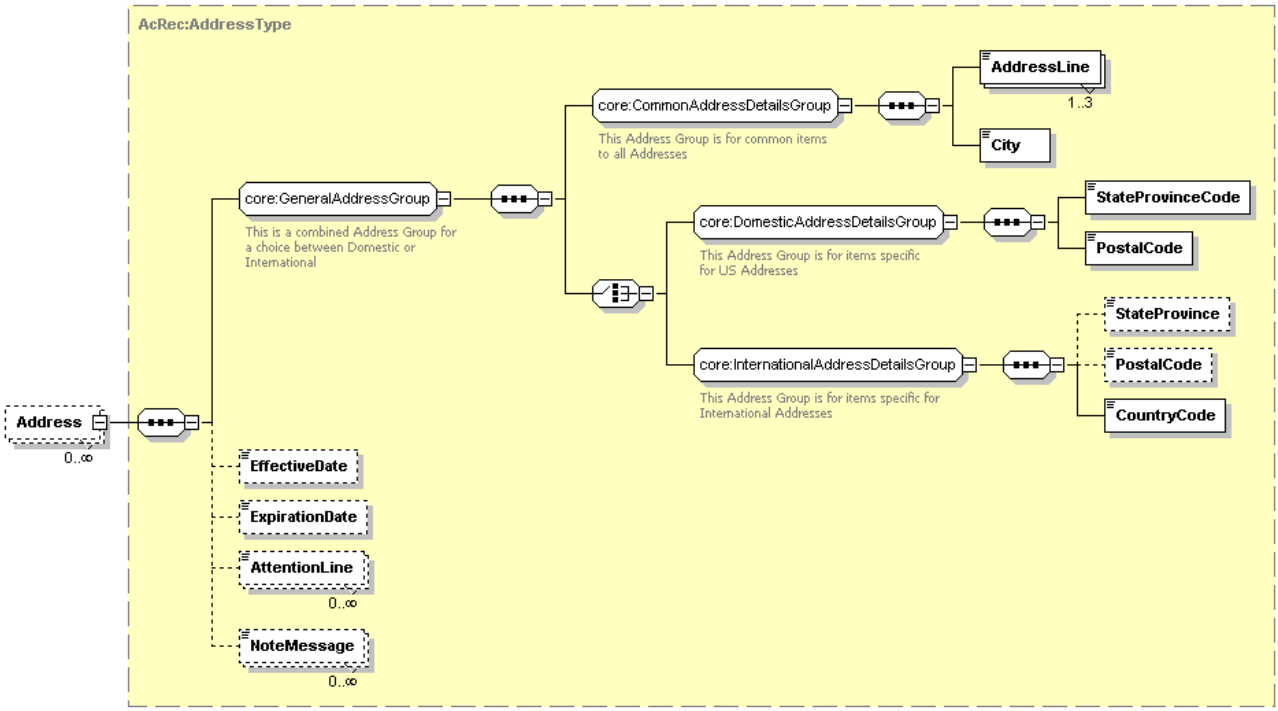

Tag Name	Schema Use	Description	Recommended Use	Format
GeneralAddressGroup	Required	This Address Group is for items common to all Addresses	Required	minOcc 1 maxOcc 1
Comment: *[GeneralAddressGroup] does not appear in the instance document. It requires the use of CommonAddressDetailsGroup* *<u>and</u>* *the choice of one of either DomesticAddressDetailsGroup or InternationalAddressDetailsGroup. This group is required in the schema only if you choose to send the address of the contact.*				
CommonAddressDetailsGroup	Required	This Address Group is for items common to all Addresses	Required	minOcc 1 maxOcc 1
Comment: *[CommonAddressDetailsGroup] does not appear in the instance document. If the address of a contact is included In the transcript, then this must be sent. It is required and must be paired with one of either DomesticAddressDetailsGroup or InternationalAddressDetailsGroup.*				
AddressLine	Required Repeatable	Local delivery information such as street, building number, PO box, or apartment portion of a postal address of a Contact at the Sending (Source) School.	Required	minOcc 1 maxOcc 3 minLength 1 maxLength 40
City	Required	The city portion of the Address of a Contact at the Sending (Source) School.	Required	minOcc 1 maxOcc 1 minLength 2 maxLength 30

Tag Name	Schema Use	Description	Recommended Use	Format
DomesticAddressDetails Group	Required choice	This Address Group is for items specific to US and Canadian Addresses	Required for domestic addresses	minOcc 1 maxOcc 1
Comment: *[*DomesticAddressDetailsGroup*] does not appear in the instance document. If the complex data element address has a United States or Canadian Postal Code and a US State or Canadian Province Code, then this should be the required choice.*				
StateProvinceCode	Required	Code for US states, etc., and Canadian provinces.	Required	minOcc 1 maxOcc 1 **Enumerations:** See Appendix A
PostalCode	Required	The postal code portion of the Address.	Required	minOcc 1 maxOcc 1 minLength 1 maxLength 17
InternationalAddressDetailsGroup	Required choice	This Address Group is for items specific for International Addresses	Required for international addresses	minOcc 1 maxOcc 1
Comment: *[*InternationalAddressDetailsGroup*] does not appear in the instance document. This choice is for addresses that do not have a US or Canadian postal code.*				
StateProvince	Optional	The literal name of the state, province or territory of a postal address of the source of this document. Use for addresses outside US or Canada.	Recommended Refer to common postal practices of the source country	minOcc 0 maxOcc 1 minLength 2 maxLength 30
Comment: For an internet resource of states or other geographical subdivisions in countries other than the US and Canada, you might choose to refer to the website of the Universal Postal Union at http://www.upu.int				
PostalCode	Optional	The postal code portion of the Address.	Recommended Refer to common postal practices of the source country	minOcc 0 maxOcc 1 minLength 1 maxLength 17
Comment: For an internet resource of states or other geographical subdivisions in countries other than the US and Canada, you might choose to refer to the website of the Universal Postal Union at http://www.upu.int				
CountryCode	Required	Code indicating Country. Use ISO 3166-1 alpha-2 standard.	Required	minOcc 1 maxOcc 1 **Enumerations:** See Appendix B1 or B2
EffectiveDate	Optional	The date when this address for the source institution became or will become valid	Optional	minOcc 0 maxOcc 1 Format is xs:Date or ccyy-mm-dd
ExpirationDate	Optional	The date when this address for the source institution will or did become no longer valid	Optional	minOcc 0 maxOcc 1 Format is xs:Date or ccyy-mm-dd
AttentionLine	Optional	The individual or office name within the postal address where inquiries should be directed.	Optional	minOcc 1 maxOcc ∞ minLength 1 maxLength 45
Comment: This might be used to indicate where questions about the record should be sent. For example, Registrar, Enrollment Management Office, or Information Technology Department.				
NoteMessage	Optional Repeatable	Additional information about the addresses of the contacts at the source school	Not recommended	minOcc 0 maxOcc ∞ minLength 1 maxLength 80

TransmissionData.Source.Organization.Contacts.Address (Continued)

Code illustration 1 (Domestic Address):

```
<Address>
    <AddressLine>1715 W Cesar Chavez</AddressLine>
    <City>Austin</City>
    <StateProvinceCode>TX</StateProvinceCode>
    <PostalCode>78703</PostalCode>
    <EffectiveDate/>
    <ExpirationDate/>
    <AttentionLine>Jane Doe</AttentionLine>
     <AttentionLine>University Registrar</AttentionLine>
    <NoteMessage/>
</Address>
```

Code illustration 2 (International Address):

```
<Address>
    <AddressLine>Altova Corporation</AddressLine>
    <AddressLine>Rudolfsplatz 13a/9</AddressLine>
    <City>Wien</City>
    <StateProvince/>
    <PostalCode>A-1010</PostalCode>
    <CountryCode>AT</CountryCode>
    <EffectiveDate/>
    <ExpirationDate/>
    <NoteMessage/>
</Address>
```

TransmissionData.Source.Organization.Contacts.Phone

Note: Although the complex data element Phone is an optional data element, if you choose to send the Phone of a Contact at the Sending Institution, then you must send a phone number.

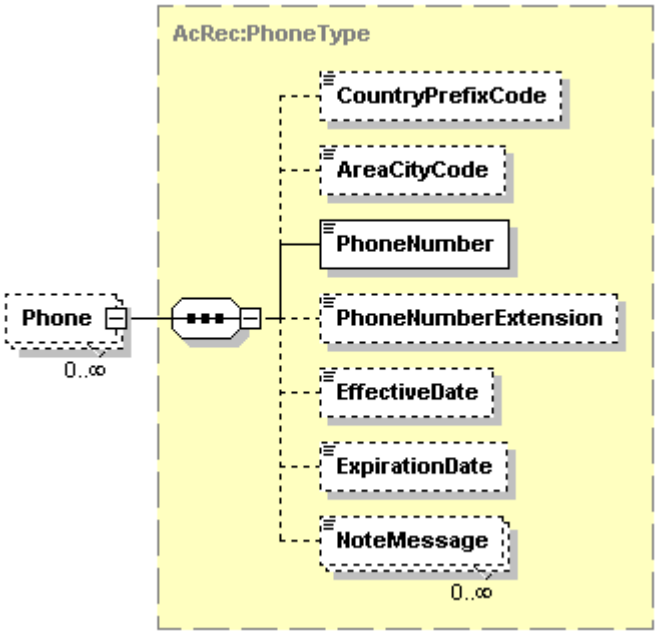

Tag Name	Schema Use	Description	Recommended Use	Format
CountryPrefixCode	Optional	International dialing code	Optional within the US	minOcc 0 maxOcc 1 minLength 1 maxLength 3
Comment: *For phones in the US, the CountryPrefixCode has a value of "1" or "001". If the transcript is being sent to an entity in the US, it is not necessary to include this data element.*				
AreaCityCode	Optional	Regional dialing code or area code	Recommended	minOcc 0 maxOcc 1 minLength 1 maxLength 5
PhoneNumber	Required	Telephone number	Required	minOcc 1 maxOcc 1 minLength 1 maxLength 11
Comment: *The phone number will typically be sent as a string of numbers with no spaces, periods or dashes.*				
PhoneNumberExtension	Optional	The extended telephone addressing information used in addition to phone number such as a PBX extension, a pager PIN, or FAX sub-address	Optional	minOcc 0 maxOcc 1 minLength 1 maxLength 5
EffectiveDate	Optional	The date when this phone for the sending or source school or agency will or did become valid	Optional	minOcc 0 maxOcc 1 xs:Date or ccyy-mm-dd
ExpirationDate	Optional	The date when this phone for the sending or source school or agency will or was no longer valid	Optional	minOcc 0 maxOcc 1 xs:Date or ccyy-mm-dd

Tag Name	Schema Use	Description	Recommended Use	Format
NoteMessage	Optional Repeatable	Additional information about the phone number of the contact at the source institution	Not recommended	minOcc 0 maxOcc ∞ minLength 1 maxLength 80

TransmissionData.Source.Organization.Contacts.Phone (Continued)

Code illustration:

```
<Phone>
    <CountryPrefixCode/>
    <AreaCityCode>512</AreaCityCode>
    <PhoneNumber>4142505</PhoneNumber>
    <PhoneNumberExtension/>
    <EffectiveDate/>
    <ExpirationDate/>
    <NoteMessage/>
</Phone>
```

TransmissionData.Source.Organization.Contacts.FaxPhone

Note: Although the complex data element FaxPhone is an optional data element, if you choose to send the FaxPhone of a Contact at the Sending Institution, then you must send a phone number.

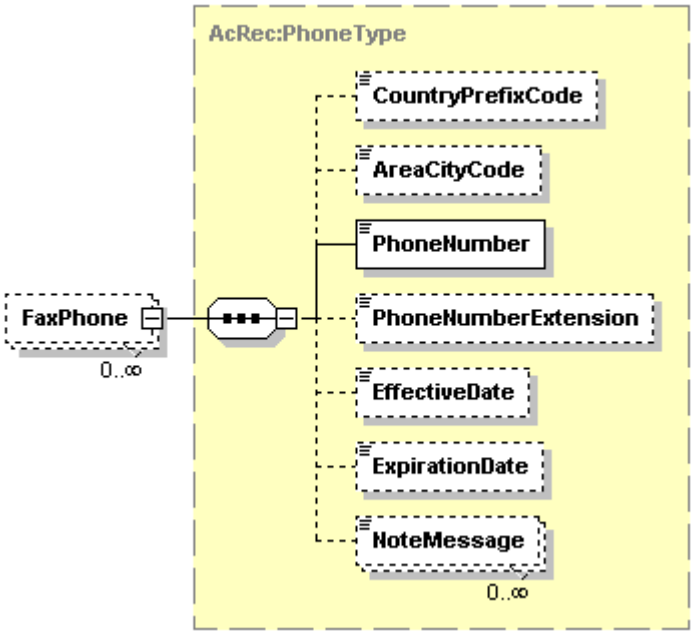

Tag Name	Schema Use	Description	Recommended Use	Format
CountryPrefixCode	Optional	International dialing code	Optional within the US	minOcc 0 maxOcc 1 minLength 1 maxLength 3
Comment: *For fax phones in the US, the CountryPrefixCode has a value of "1" or "001". If the transcript is being sent to an entity in the US, it is not necessary to include this data element.*				
AreaCityCode	Optional	Regional dialing code or area code	Recommended	minOcc 0 maxOcc 1 minLength 1 maxLength 5
PhoneNumber	Required	Telephone number	Required	minOcc 1 maxOcc 1 minLength 1 maxLength 11
Comment: *The phone number will typically be sent as a string of numbers with no spaces, periods or dashes.*				
PhoneNumberExtension	Optional	The extended telephone addressing information used in addition to phone number such as a PBX extension, a pager PIN, or FAX sub-address	Optional	minOcc 0 maxOcc 1 minLength 1 maxLength 5
EffectiveDate	Optional	The date when this fax phone for the sending or source school or agency will or did become valid	Optional	minOcc 0 maxOcc 1 xs:Date or ccyy-mm-dd
ExpirationDate	Optional	The date when this fax phone for the sending or source school or agency will or was no longer valid	Optional	minOcc 0 maxOcc 1 xs:Date or ccyy-mm-dd

Tag Name	Schema Use	Description	Recommended Use	Format
NoteMessage	Optional Repeatable	Additional information about the fax phone number of the contact at the source institution	Not recommended	minOcc 0 maxOcc ∞ minLength 1 maxLength 80

TransmissionData.Source.Organization.Contacts.FaxPhone (Continued)

Code illustration:

```
<FaxPhone>
    <CountryPrefixCode/>
    <AreaCityCode>512</AreaCityCode>
    <PhoneNumber>4142505</PhoneNumber>
    <PhoneNumberExtension/>
    <EffectiveDate/>
    <ExpirationDate/>
    <NoteMessage/>
</FaxPhone>
```

TransmissionData.Source.Organization.Contacts.Email

Note: Although the complex data element Email is an optional data element, if you choose to send the Email of a Contact at the Sending Institution, then you must send the data element EmailAddress.

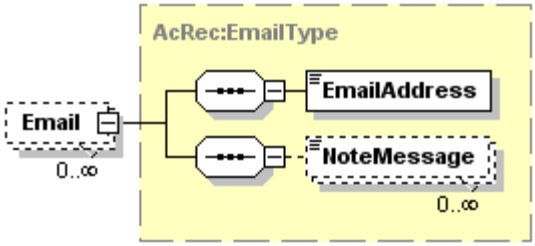

Tag Name	Schema Use	Description	Recommended Use	Format
EmailAddress	Required	The numbers, letters, and symbols used to identify an electronic mail (Email) user within a network.	Required	minOcc 1 maxOc 1 minLength 1 maxLength 128
NoteMessage	Optional Repeatable	Additional information about the email address of the contact at the sending school	Not recommended	minOcc 0 maxOc ∞ minLength 1 maxLength 80

Code illustration:

```
<Email>
    <EmailAddress>registrar@anyuniversity.edu</EmailAddress>
    <NoteMessage/>
</Email>
```

TransmissionData.Source.Organization.Contacts.URL

Note: Although the complex data element URL is an optional data element, if you choose to send the URL of the Sending Institution, then you must send the URLAddress.

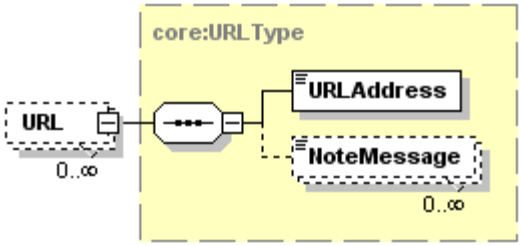

Tag Name	Schema Use	Description	Recommended Use	Format
URLAddress	Required	The Uniform Resource Locator (URL) address of the sending school or of a contact at the sending school	Required	minOcc 1 maxOcc 1 minLength 1 maxLength 512
NoteMessage	Optional Repeatable	Additional information about the URL address of the source institution	Not recommended	minOcc 0 maxOcc ∞ minLength 1 maxLength 80

Code illustration:

```
<URL>
    <URLAddress>www.anyuniversity.edu</URLAddress>
    <NoteMessage />
</URL>
```

TransmissionData.Source.Organization.Accreditation

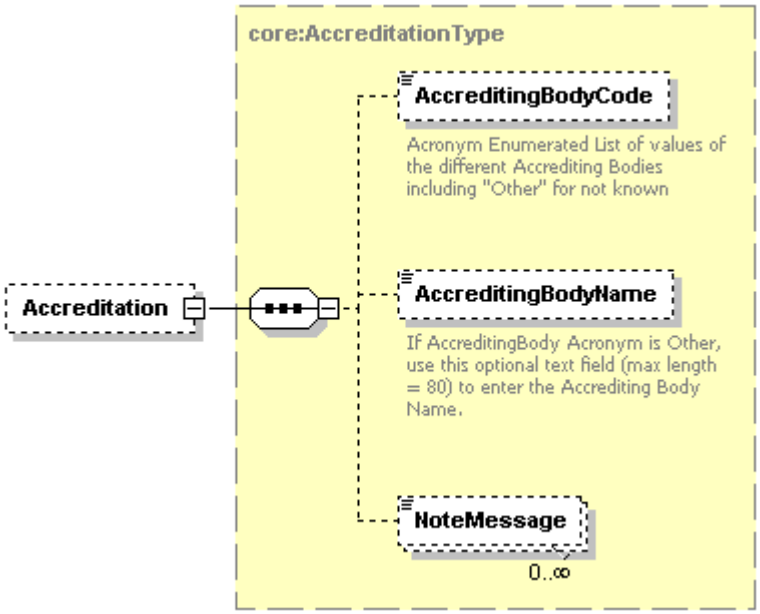

Tag Name	Schema Use	Description	Recommended Use	Format
AccreditingBodyCode	Optional	This is the acronym for the regional or other accrediting body that has given accreditation to the school sending the college transcript	Optional	minOcc 0 maxOcc 1 **Enumerations:** MSA NCA-HLC NCA-CASI NEASC-CIHE NEASC-CTCI NWCCU SACS WASC-ACCJC WASC-ACSCU Other

Comment: *This is information that might accompany a paper transcript, either on the reverse side of a page of paper, or attached to it. The accrediting bodies are*

MSA *– Middle States Association of Colleges and Schools, Commission on Higher Education*

NCA-HLC *– North Central Association of Colleges and Schools, Higher Learning Commission*

NCA-CASI *– North Central Association of Colleges and Schools, Commission on Accreditation and School Improvement, Board of Trustees*

NEASC-CIHE *– New England Association of Schools and Colleges, Inc., Commission on Institutions of Higher Education*

NEASC-CTCI *– New England Association of Schools and Colleges, Inc., Commission on Technical and Career Institutions*

NWCCU *– Northwest Commission on Colleges and Universities*

SACS *– Southern Association of Colleges and Schools, Commission on Colleges*

WASC-ACCJC *– Western Association of Schools and Colleges, Accrediting Commission for Community and Junior Colleges*

WASC-ACSCU *– Western Association of Schools and Colleges, Accrediting Commission for Senior Colleges and Universities*

Other *– Other accrediting bodies not shown above*

Tag Name	Schema Use	Description	Recommended Use	Format
AccreditingBodyName	Optional	The name of the accrediting body.	Optional	minOcc 0 maxOc 1 minLength 1 maxLength 80
Comment: *This is the specific name of the accrediting body. It would only be important to include it, if the enumerated value of "Other" were used in the data element "AccreditingBodyCode".*				
NoteMessage	Optional Repeatable	Additional information about the accreditation of the sending high school	Not recommended	minOcc 0 maxOc ∞ minLength 1 maxLength 80

Code illustration:

```
<Accreditation>
    <AccreditingBodyCode>SACS</AccreditingBodyCode>
    <AccreditingBodyName>Southern Association of Colleges and Schools</AccreditingBodyName>
    <NoteMessage/>
</Accreditation>
```

TransmissionData.Destination

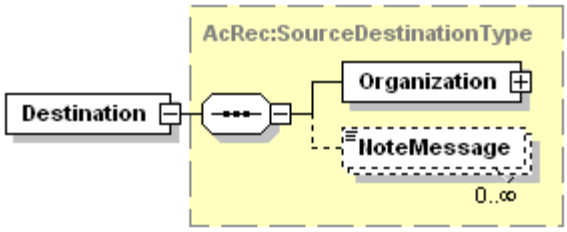

Tag Name	Schema Use	Description	Recommended Use	Format
Organization	Required	Non-person entity such as Organization, Institution, Agency or Business.	Required	minOcc 1 maxOcc 1
Comment: *This complex data element will be expanded on page 25 which follows.*				
NoteMessage	Optional Repeatable	Additional information about destination organization or school.	Not Recommended	minOcc 0 maxOcc ∞ minLength 1 maxLength 80
Comment: *This is the postsecondary school or other agency to which this student's transcript is being sent.*				

Code illustration:

```
<Destination>
    <Organization>

    </Organization>
    <NoteMessage/>
</Destination>
```

TransmissionData.Destination.Organization

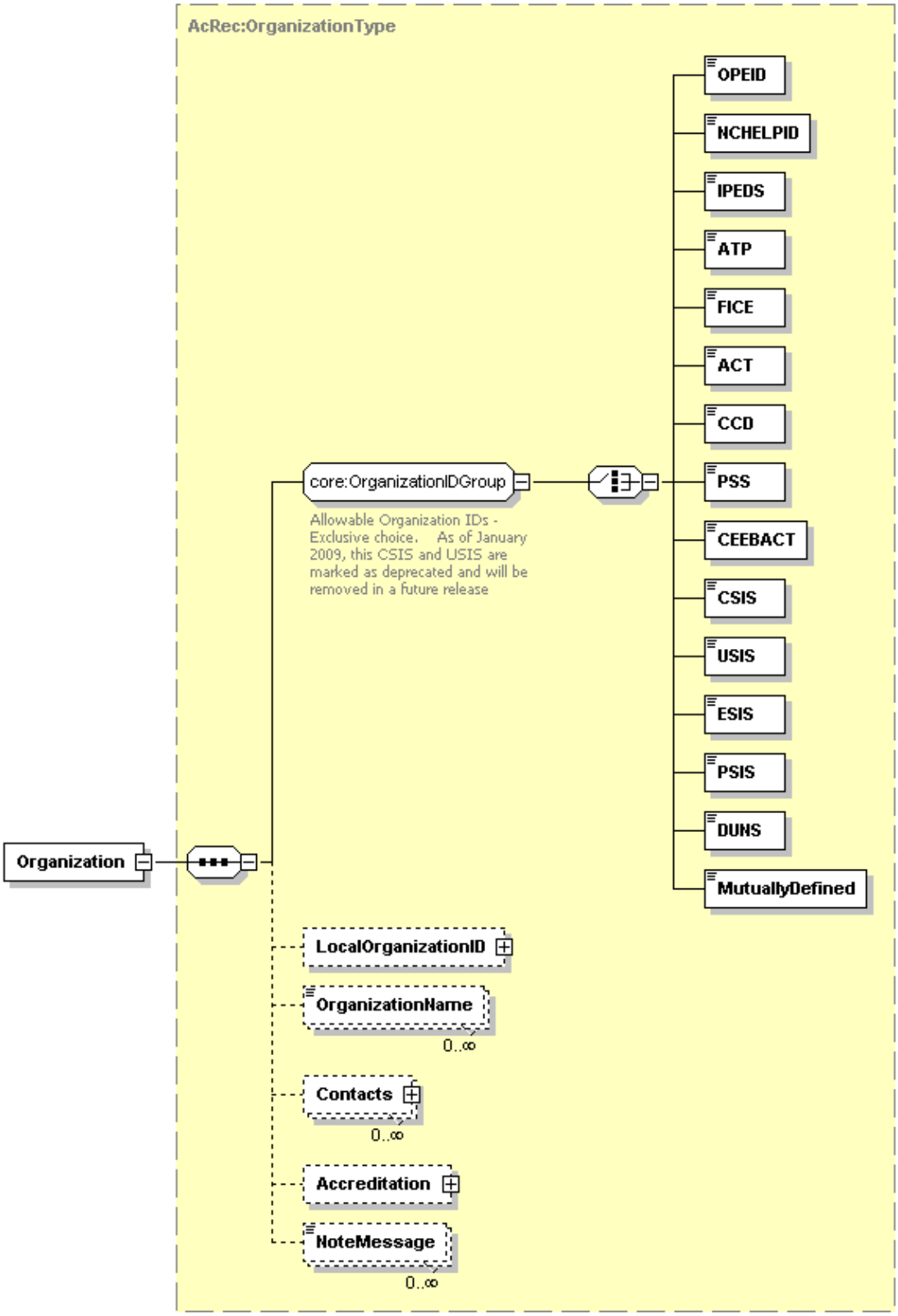

TransmissionData.Destination.Organization (Continued)

Tag Name	Schema Use	Description	Recommended Use	Format
[OrganizationIDGroup]	Required	Allowable Organization IDs - Exclusive choice	Required	minOcc 1 maxOcc 1
Comment: *[OrganizationIDGroup] is not an XML tag and does not appear in an instance document. It requires the choice of one and only one of the following code set tags to identify the institution/organization.*				
OPEID	Required choice	The unique identifier assigned by the Office of Postsecondary Education for each data exchange partner.	Recommended choice	minOcc 0 maxOcc 1 minLength 3 maxLength 8
NCHELPID	Required choice	The unique identifier assigned by National Council on Higher Education Loan Programs for each data exchange partner.	Not Recommended	minOcc 0 maxOcc 1 minLength 3 maxLength 8
Comment: *The NCHELPID would not normally be an appropriate choice in this case since transcripts are not normally sent to the financial aid world.*				
IPEDS	Required choice	The unique identifier for Integrated Postsecondary Education Data System assigned by the National Center for Education Statistics for each postsecondary data exchange partner.	Recommended choice	minOcc 0 maxOcc 1 minLength 6 maxLength 6
ATP	Required choice	The unique identifier for the Admissions Testing Program assigned by the College Board for each data exchange partner.	Recommended choice	minOcc 0 maxOcc 1 minLength 6 maxLength 6
FICE	Required choice	The unique identifier once maintained for the Federal Interagency Committee on Education by the National Center for Education Statistics for each postsecondary data exchange partner.	Recommended choice	minOcc 0 maxOcc 1 minLength 6 maxLength 6
Comment: *Although the FICE code set is still widely used by many postsecondary institutions, it has not been maintained by NCES or anyone else since late in the last century. Therefore, codes for new institutions created since then have been locally assigned and cannot be relied upon.*				
ACT	Required choice	The unique identifier for postsecondary educational institutions assigned by American College Testing available at www.act.org	Recommended choice	minOcc 0 maxOcc 1 minLength 4 maxLength 4
CCD	Required choice	The unique identifier assigned by National Center for Education Statistics as the Common Core of Data for each data exchange partner.	Not Recommended	minOcc 0 maxOcc 1 minLength 12 maxLength 12
Comment: *The CCD Is not a recommended choice to identify postsecondary school senders.*				
PSS	Required choice	The unique identifier assigned by the US Department of Education's National Center for Education Statistics for private K12 schools in the US.	Not Recommended	minOcc 0 maxOcc 1 minLength 8 maxLength 8
Comment: *The PSS Is not a recommended choice to identify postsecondary school recipients.*				

Tag Name	Schema Use	Description	Recommended Use	Format
CEEBACT	Required choice	The unique identifier assigned by the College Entrance Examining Board and ACT for each K-12 data exchange partner.	Not Recommended	minOcc 0 maxOcc 1 minLength 6 maxLength 6
Comment: *The CEEBACT code set is not a recommended choice to identify postsecondary school recipients.*				
CSIS	Required choice	The unique identifier assigned by the Statistics Canada Canadian College Student Information System for each college data exchange partner.	Not Recommended	minOcc 0 maxOcc 1 minLength 6 maxLength 6
Comment: *Since this code set has been used in the past to identify colleges in Canada, it is not a recommended choice for postsecondary schools in the United States. It would have been an appropriate choice for colleges in Canada, but this code set has now been replaced by a new code set (PSIS).*				
USIS	Required choice	The unique identifier assigned by the Statistics Canada University Student Information System for each university data exchange partner.	Not Recommended	minOcc 0 maxOcc 1 minLength 6 maxLength 6
Comment: *Since this code set has been used in the past to identify universities in Canada, it is not a recommended choice for postsecondary schools in the United States. This code set has been replaced by the new code set PSIS.*				
ESIS	Required choice	The unique identifier assigned by the Statistics Canada Enhanced Student Information System for each data postsecondary exchange partner.	Not Recommended	minOcc 0 maxOcc 1 minLength 8 maxLength 8
Comment: *The ESIS number would not be a normal choice to identify the recipient agency or postsecondary school in the United States. However, it could have been used to identify a postsecondary school in Canada. However, this code set has been replaced by the new code set PSIS.*				
PSIS	Required choice	The unique identifier assigned by the Statistics Canada Postsecondary Student Information System for each data exchange partner.	Optional choice	minOcc 0 maxOcc 1 minLength 8 maxLength 8
Comment: *The PSIS number would not be a normal choice to identify a recipient postsecondary school in the United States. However, it would be used to identify a postsecondary school in Canada.*				
DUNS	Required choice	Data Universal Numbering System (DUNS), unique nine character company identification number issued by Dun and Bradstreet Corporation.	Not Recommended	minOcc 0 maxOcc 1 minLength 9 maxLength 9
Comment: *The DUNS number would not be a normal choice to identify a recipient school in the US or Canada.*				
MutuallyDefined	Required choice	This code set could be used by a selected set of trading partners if none of the other above code sets is appropriate.	Optional choice	minOcc 0 maxOcc 1 minLength 1 maxLength 60
Comment: *If a College Transcript is being sent to a school or agency that does not have a valid code in one of the other above code sets, and if that code and code set are recognized by the recipient, then this code set might be used for a set of limited exchange partners.*				
Comment: *End of OrganizationIDGroup choice set tags*				
LocalOrganizationID	Optional	A code set typically used by a state, province or region to identify the receiving school.	Optional	minOcc 0 maxOcc 1
Comment: *This complex data element will be expanded on page 29 which follows.*				

Tag Name	Schema Use	Description	Recommended Use	Format
OrganizationName	Optional Repeatable	Name of Non-person entity such as Organization, Institution, Agency or Business.	Recommended	minOcc 0 maxOcc ∞ minLength 1 maxLength 60
Comment: *This is the name of the recipient postsecondary school.*				
Contacts	Optional Repeatable	To identify a person or an office at the receiving school or agency to which administrative communications should be directed	Recommended	minOcc 0 maxOcc ∞
Comment: *This complex data element will be further explained and expanded on page 30 which follows.*				
Accreditation	Optional	To provide information about the accrediting body that has certified the receiving school.	Not Recommended	minOcc 0 maxOcc 1
Comment: *It would be very unusual for the sending school of a transcript to include accreditation information about the recipient school.*				
NoteMessage	Optional Repeatable	Additional information about the organization	Not recommended	minOcc 0 maxOcc ∞ minLength 1 maxLength 80

TransmissionData.Destination.Organization (Continued)

Code illustration:

```
<Organization>
    <FICE>123456</FICE>
     <LocalOrganizationID>

     </LocalOrganizationID>
    <OrganizationName>Southwestern University</OrganizationName>
    <Contacts>

    </Contacts>
    <Accreditation/>
    <NoteMessage/>
</Organization>
```

TransmissionData.Destination.Organization.LocalOrganizationID

Note: Although the complex data element LocalOrganizationID is an optional data element, if you choose to send LocalOrganizationID, then you must send both LocalOrganizationIDCode and also LocalOrganizationIDQualifier.

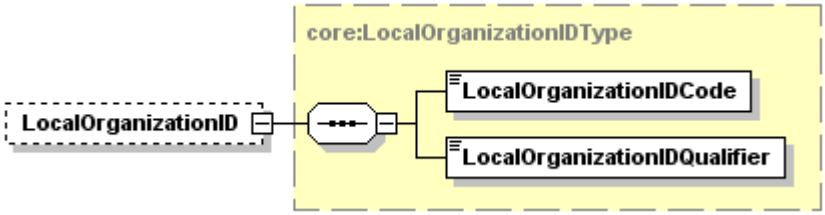

Tag Name	Schema Use	Description	Recommended Use	Format
LocalOrganizationIDCode	Required	The code assigned for the receiving school by the state, province or other mutually defined agency specified in the LocalIDQualifier that follows.	Required	minOcc 1 maxOcc 1 minLength 1 maxLength 35
Comment: *This is a required data element only if the Local Organization ID complex data element is sent. This is typically the administrative school code assigned by a state or province to specifically identify the receiving school in that state.*				
LocalOrganizationIDQualifier	Required	This is the state, province or other mutually definded agency that assigned the Local ID Code above.	Required	minOcc 1 maxOcc 1 **Enumerations:** See Code Set in Appendix A
Comment: *This is a required data element only if the Local Organization ID data element is sent. This is typically the state or province that assigned the code to specifically identify the receiving school in that state*				

Code illustration:

```
<LocalOrganizationID>
        <LocalOrganizationIDCode>2237901002</LocalOrganizationIDCode>
        <LocalOrganizationIDQualifier>TX</LocalOrganizationIDQualifier>
</LocalOrganizationID>
```

TransmissionData.Destination.Organization.Contacts

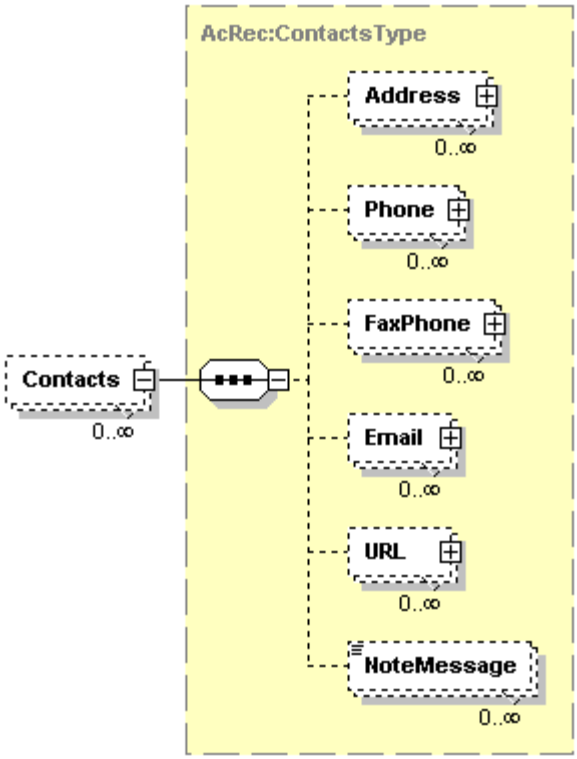

Tag Name	Schema Use	Description	Recommended Use	Format
Address	Optional Repeatable	This is a combined Address Group for a choice between Domestic or International	Recommended	minOcc o maxOcc ∞
Comment: *This complex data element will be expanded on page 32 which follows.*				
Phone	Optional Repeatable	Phone number of receiving institution contact	Recommended	minOcc o maxOcc ∞
Comment: *This complex data element will be expanded on page 35 which follows.*				
FaxPhone	Optional Repeatable	Fax phone number of recipient institution contact	Optional	minOcc o maxOcc ∞
Comment: *This complex data element will be expanded on page 37 which follows.*				
Email	Optional Repeatable	Email address of destination institution contact	Recommended	minOcc o maxOcc ∞
Comment: *This complex data element will be expanded on page 39 which follows.*				
URL	Optional Repeatable	The Uniform Resource Locator of destination institution	Optional	minOcc o maxOcc ∞
Comment: *This complex data element will be expanded on page 40 which follows.*				

Tag Name	Schema Use	Description	Recommended Use	Format
NoteMessage	Optional Repeatable	Additional information about the contacts at the receiving institution	Not recommended	minOcc o maxOcc ∞ minLength 1 maxLength 80
Comment: *This is contact information included by the sending school to indicate the preferred means for the receiving school to contact the sending school in case there is a need for further communication. This is the only place in the instance document to include the name, address and contact information about the school that is receiving the transcript.*				

TransmissionData.Destination.Organization.Contacts (Continued)

Code illustration:

```
<Contacts>
    <Address>

    </Address>
    <Phone>

    </Phone>
    <FaxPhone>

    </FaxPhone>
    <Email>

    </Email>
    <URL>

    </URL>
    <NoteMessage/>
</Contacts>
```

TransmissionData.Destination.Organization.Contacts.Address

Note: Although the complex data element Address is an optional data element, if you choose to send the Address of Contacts at the Receiving Institution, then you must send AddressLine and City and also StateProvinceCode, and PostalCode OR CountryCode.

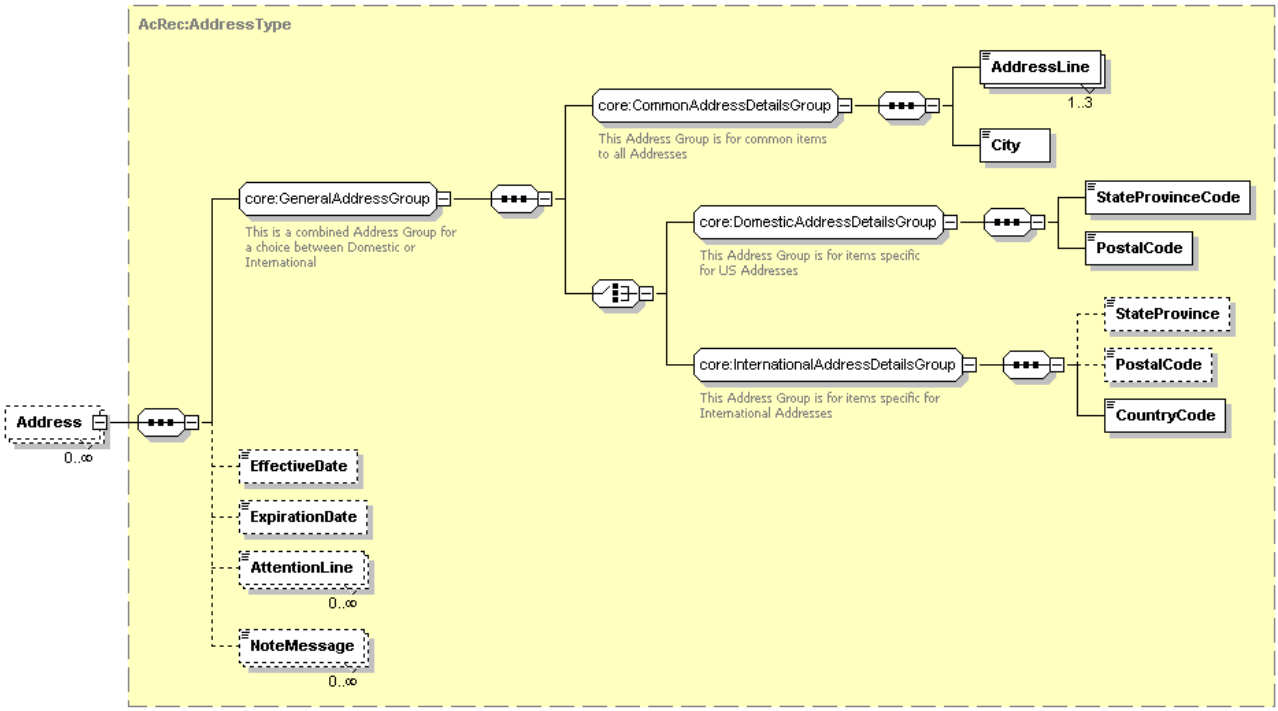

Tag Name	Schema Use	Description	Recommended Use	Format
GeneralAddressGroup	Required	This Address Group is for items common to all Addresses	Required	minOcc 1 maxOcc 1
Comment: *[GeneralAddressGroup] does not appear in the instance document. It requires the use of CommonAddressDetailsGroup <u>and</u> the choice of one of either DomesticAddressDetailsGroup or InternationalAddressDetailsGroup. This group is required in the schema only if you choose to send the address of the contact.*				
CommonAddressDetailsGroup	Required	This Address Group is for items common to all Addresses	Required	minOcc 1 maxOcc 1
Comment: *[CommonAddressDetailsGroup] does not appear in the instance document. If the address of a contact is included In the transcript, then this must be sent. It is required and must be paired with one of either DomesticAddressDetailsGroup or InternationalAddressDetailsGroup.*				
AddressLine	Required Repeatable	Local delivery information such as street, building number, PO box, or apartment portion of a postal address of a Contact at the receiving School.	Required	minOcc 1 maxOcc 3 minLength 1 maxLength 40
City	Required	The city portion of the Address of a Contact at the receiving School.	Required	minOcc 1 maxOcc 1 minLength 2 maxLength 30

Tag Name	Schema Use	Description	Recommended Use	Format
DomesticAddressDetails Group	Required choice	This Address Group is for items specific to US and Canadian Addresses	Required for domestic addresses	minOcc 1 maxOcc 1
Comment: *[*DomesticAddressDetailsGroup*] does not appear in the instance document. If the complex data element address has a United States or Canadian Postal Code and a US State or Canadian Province Code, then this should be the required choice.*				
StateProvinceCode	Required	Code for US states, etc., and Canadian provinces.	Required	minOcc 1 maxOcc 1 **Enumerations:** See Appendix A
PostalCode	Required	The postal code portion of the Address.	Required	minOcc 1 maxOcc 1 minLength 1 maxLength 17
InternationalAddressDetailsGroup	Required choice	This Address Group is for items specific for International Addresses	Required for international addresses	minOcc 1 maxOcc 1
Comment: *[*InternationalAddressDetailsGroup*] does not appear in the instance document. This choice is for addresses that do not have a US or Canadian postal code.*				
StateProvince	Optional	The literal name of the state, province or territory of a postal address of the receiver of this document. Use for addresses outside US or Canada.	Recommended Refer to common postal practices of the recipient country	minOcc 0 maxOcc 1 minLength 2 maxLength 30
Comment: For an internet resource of states or other geographical subdivisions in countries other than the US and Canada, you might choose to refer to the website of the Universal Postal Union at http://www.upu.int				
PostalCode	Optional	The postal code portion of the Address.	Recommended Refer to common postal practices of the source country	minOcc 0 maxOcc 1 minLength 1 maxLength 17
Comment: For an internet resource of states or other geographical subdivisions in countries other than the US and Canada, you might choose to refer to the website of the Universal Postal Union at http://www.upu.int				
CountryCode	Required	Code indicating Country. Use ISO 3166-1 alpha-2 standard.	Required	minOcc 1 maxOcc 1 **Enumerations:** See Appendix B1 or B2
EffectiveDate	Optional	The date when this address for the receiving institution became or will become valid	Optional	minOcc 0 maxOcc 1 Format is xs:Date or ccyy-mm-dd
ExpirationDate	Optional	The date when this address for the receiving institution will or did become no longer valid	Optional	minOcc 0 maxOcc 1 Format is xs:Date or ccyy-mm-dd
AttentionLine	Optional	The individual or office name within the postal address where inquiries should be directed.	Optional	minOcc 1 maxOcc ∞ minLength 1 maxLength 45
Comment: This might be used to indicate where questions about the record should be sent. For example, Registrar, Enrollment Management Office, or Information Technology Department.				
NoteMessage	Optional Repeatable	Additional information about the addresses of the contacts at the destination school	Not recommended	minOcc 0 maxOcc ∞ minLength 1 maxLength 80

TransmissionData.Destination.Organization.Contacts.Address (Continued)

Code illustration 1 (Domestic Address):

```
<Address>
    <AddressLine>1715 W Cesar Chavez</AddressLine>
    <City>Austin</City>
    <StateProvinceCode>TX</StateProvinceCode>
    <PostalCode>78703</PostalCode>
    <EffectiveDate/>
    <ExpirationDate/>
    <AttentionLine>Jane Doe</AttentionLine>
     <AttentionLine>University Registrar</AttentionLine>
    <NoteMessage/>
</Address>
```

Code illustration 2 (International Address):

```
<Address>
    <AddressLine>Altova Corporation</AddressLine>
    <AddressLine>Rudolfsplatz 13a/9</AddressLine>
    <City>Wien</City>
    <StateProvince/>
    <PostalCode>A-1010</PostalCode>
    <CountryCode>AT</CountryCode>
    <EffectiveDate/>
    <ExpirationDate/>
    <NoteMessage/>
</Address>
```

TransmissionData.Destination.Organization.Contacts.Phone

Note: Although the complex data element Phone is an optional data element, if you choose to send the Phone of a Contact at the Receiving Institution, then you must send a phone number.

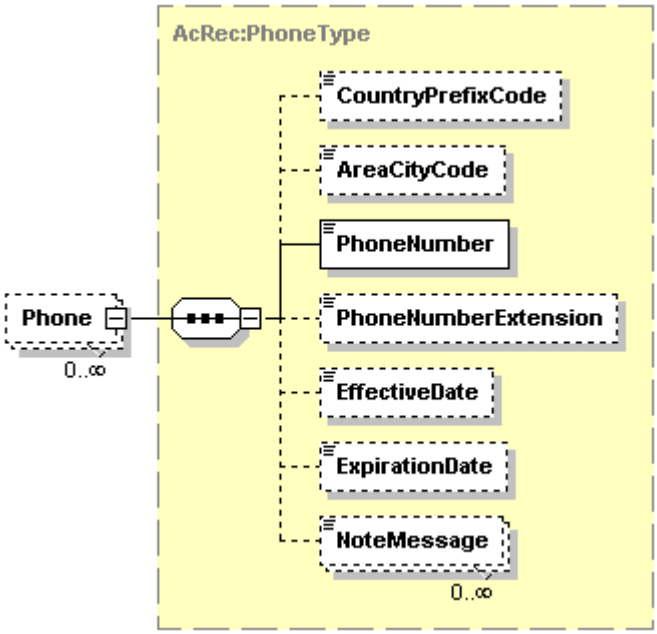

Tag Name	Schema Use	Description	Recommended Use	Format
CountryPrefixCode	Optional	International dialing code	Optional within the US	minOcc 0 maxOcc 1 minLength 1 maxLength 3
Comment: *For phones in the US, the CountryPrefixCode has a value of "1" or "001". If the transcript is being sent to an entity in the US, it is not necessary to include this data element.*				
AreaCityCode	Optional	Regional dialing code or area code	Recommended	minOcc 0 maxOcc 1 minLength 1 maxLength 5
PhoneNumber	Required	Telephone number	Required	minOcc 1 maxOcc 1 minLength 1 maxLength 11
Comment: *The phone number will typically be sent as a string of numbers with no spaces, periods or dashes.*				
PhoneNumberExtension	Optional	The extended telephone addressing information used in addition to phone number such as a PBX extension, a pager PIN, or FAX sub-address	Optional	minOcc 0 maxOcc 1 minLength 1 maxLength 5
EffectiveDate	Optional	The date when this phone for the destination school or agency will or did become valid	Optional	minOcc 0 maxOcc 1 xs:Date or ccyy-mm-dd
ExpirationDate	Optional	The date when this phone for the destination school or agency will be or was no longer valid	Optional	minOcc 0 maxOcc 1 xs:Date or ccyy-mm-dd

Tag Name	Schema Use	Description	Recommended Use	Format
NoteMessage	Optional Repeatable	Additional information about the phone number of the contact at the destination institution	Not recommended	minOcc 0 maxOcc ∞ minLength 1 maxLength 80

TransmissionData.Destination.Organization.Contacts.Phone (Continued)

Code illustration:

```
<Phone>
    <CountryPrefixCode/>
    <AreaCityCode>512</AreaCityCode>
    <PhoneNumber>4142505</PhoneNumber>
    <PhoneNumberExtension/>
    <EffectiveDate/>
    <ExpirationDate/>
    <NoteMessage/>
</Phone>
```

TransmissionData.Source.Organization.Contacts.FaxPhone

Note: Although the complex data element FaxPhone is an optional data element, if you choose to send the FaxPhone of a Contact at the Destination Institution, then you must send a phone number.

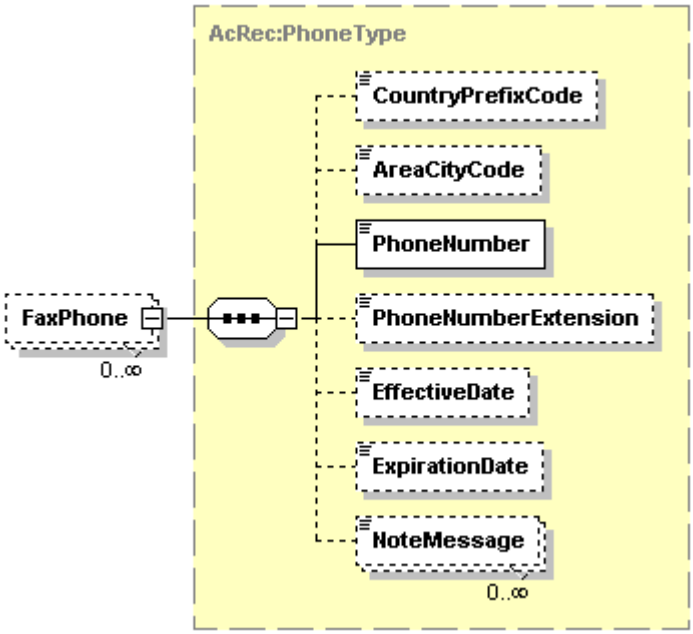

Tag Name	Schema Use	Description	Recommended Use	Format
CountryPrefixCode	Optional	International dialing code	Optional within the US	minOcc 0 maxOcc 1 minLength 1 maxLength 3
Comment: *For fax phones in the US, the CountryPrefixCode has a value of "1" or "001". If the transcript is being sent to an entity in the US, it is not necessary to include this data element.*				
AreaCityCode	Optional	Regional dialing code or area code	Recommended	minOcc 0 maxOcc 1 minLength 1 maxLength 5
PhoneNumber	Required	Telephone number	Required	minOcc 1 maxOcc 1 minLength 1 maxLength 11
Comment: *The phone number will typically be sent as a string of numbers with no spaces, periods or dashes.*				
PhoneNumberExtension	Optional	The extended telephone addressing information used in addition to phone number such as a PBX extension, a pager PIN, or FAX sub-address	Optional	minOcc 0 maxOcc 1 minLength 1 maxLength 5
EffectiveDate	Optional	The date when this fax phone for the sending or source school or agency will or did become valid	Optional	minOcc 0 maxOcc 1 xs:Date or ccyy-mm-dd
ExpirationDate	Optional	The date when this fax phone for the sending or source school or agency will or was no longer valid	Optional	minOcc 0 maxOcc 1 xs:Date or ccyy-mm-dd

Tag Name	Schema Use	Description	Recommended Use	Format
NoteMessage	Optional Repeatable	Additional information about the fax phone number of the contact at the source institution	Not recommended	minOcc 0 maxOcc ∞ minLength 1 maxLength 80

TransmissionData.Destination.Organization.Contacts.FaxPhone (Continued)

Code illustration:

```
<FaxPhone>
    <CountryPrefixCode/>
    <AreaCityCode>512</AreaCityCode>
    <PhoneNumber>4142505</PhoneNumber>
    <PhoneNumberExtension/>
    <EffectiveDate/>
    <ExpirationDate/>
    <NoteMessage/>
</FaxPhone>
```

TransmissionData.Destination.Organization.Contacts.Email

Note: Although the complex data element Email is an optional data element, if you choose to send the Email of a Contact at the Destination Institution, then you must send the data element EmailAddress.

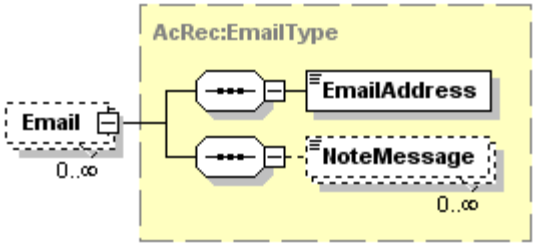

Tag Name	Schema Use	Description	Recommended Use	Format
EmailAddress	Required	The numbers, letters, and symbols used to identify an electronic mail (Email) user within a network.	Required	minOcc 1 maxOc 1 minLength 1 maxLength 128
NoteMessage	Optional Repeatable	Additional information about the email address of the contact at the sending school	Not recommended	minOcc 0 maxOc ∞ minLength 1 maxLength 80

Code illustration:

```
<Email>
    <EmailAddress>registrar@anyuniversity.edu</EmailAddress>
    <NoteMessage/>
</Email>
```

TransmissionData.Destination.Organization.Contacts.URL

Note: Although the complex data element URL is an optional data element, if you choose to send the URL of the Destination Institution, then you must send the URLAddress.

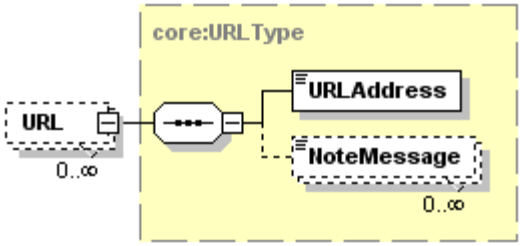

Tag Name	Schema Use	Description	Recommended Use	Format
URLAddress	Required	The Uniform Resource Locator (URL) address of the destination school or of a contact at the destination school	Required	minOcc 1 maxOcc 1 minLength 1 maxLength 512
NoteMessage	Optional Repeatable	Additional information about the URL address of the destination institution	Not recommended	minOcc 0 maxOcc ∞ minLength 1 maxLength 80

Code illustration:

```
<URL>
    <URLAddress>www.anyuniversity.edu</URLAddress>
    <NoteMessage />
</URL>
```

Student

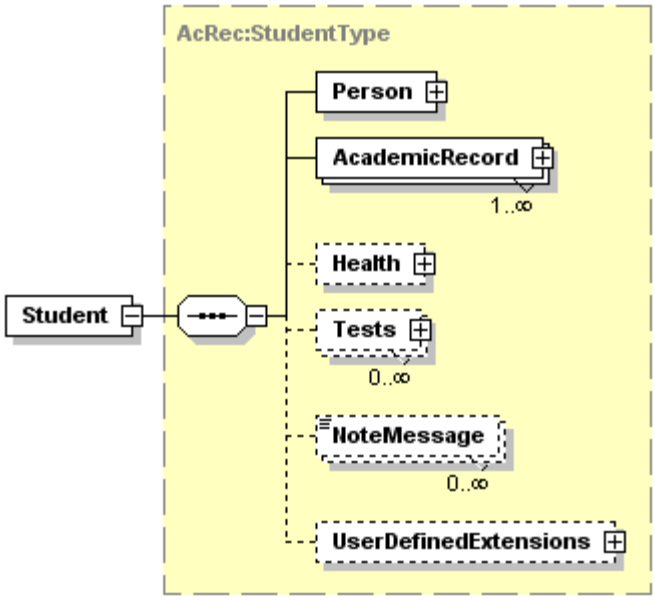

Tag Name	Schema Use	Description	Recommended Use	Format
Person	Required	Biographical and demographic information about the student.	Required	minOcc 1 maxOcc 1
Comment: *This complex data element will be expanded on page 43 which follows.*				
AcademicRecord	Required Repeatable	Information concerning the academic achievement or status of the student.	Required	minOcc 1 maxOcc ∞
Comment: *The AcademicRecord complex data element may be repeated. There must be at least one occurrence which normally represents the record from the sending institution. Additional occurrences may be included for transferred work or when organizational changes or changes in the type of credits used at the school occurred. This complex data element will be expanded on page 70 which follows.*				
Health	Optional	Immunization, vaccinations and health screenings	Optional	minOcc 0 maxOcc 1
Comment: *This complex data element will be expanded on page 216 which follows.*				
Tests	Optional Repeatable	Academic and achievement test data	Optional	minOcc 0 maxOcc ∞
Comment: *Tests administered by national testing agencies are recommended to come directly from the agency and should not normally be included with the transcript. Use this section for state and local test data as required. This complex data element will be expanded on page 218 which follows.*				
NoteMessage	Optional Repeatable	Additional information about the student	Not Recommended	minOcc 0 maxOcc ∞ minLength 1 maxLength 80
UserDefinedExtensions	Optional	Additional structured information. Requires mutually defined XML schema.	Optional	minOcc 0 maxOcc 1
Comment: *User Defined Extenstions are mini schemas containing formatted data that has been agreed to among a previously determined set of trading partners. This is typically a state, region or perhaps users of a specific vendor's product. Other users not in the set of trading partners would simply ignore this complex data element.*				

Student (Continued)

Code illustration:

```
<Student>
    <Person>

    </Person>
    <AcademicRecord>

    </AcademicRecord>
    <Health>

    </Health>
    <Tests>

    </Tests>
    <NoteMessage/>
    <UserDefinedExtensions/>
</Student>
```

Student.Person

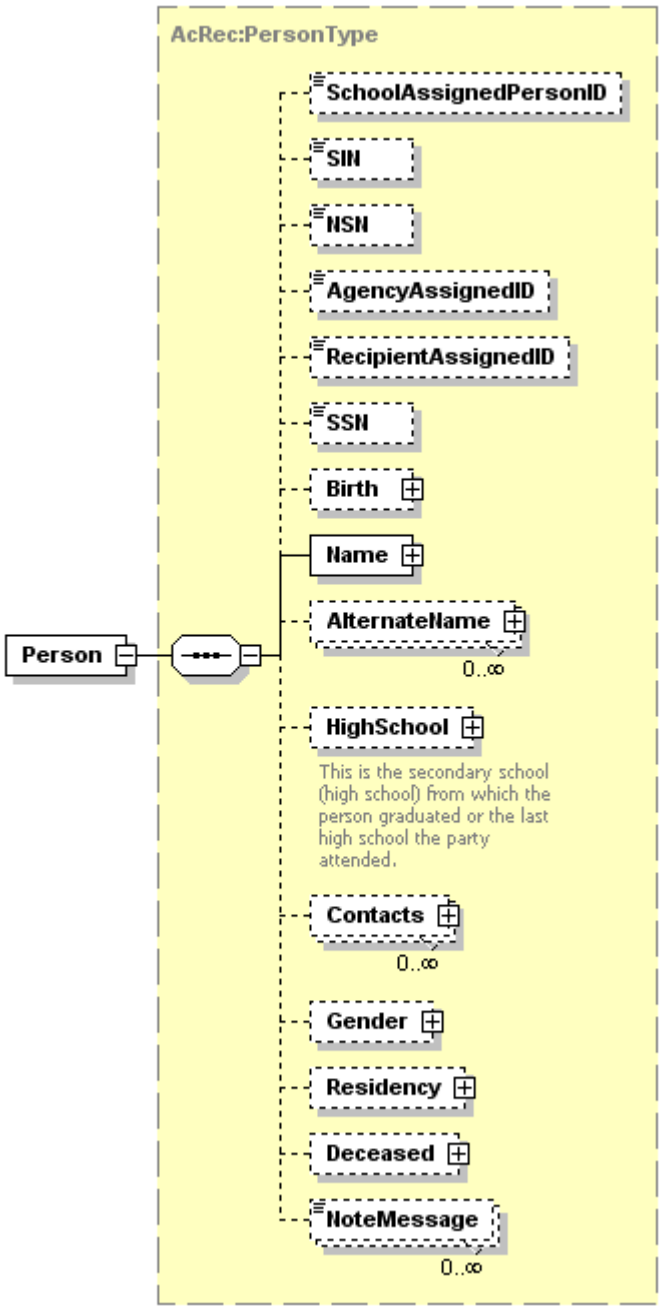

Tag Name	Schema Use	Description	Recommended Use	Format
SchoolAssignedPersonID	Optional	School Assigned Identifier Type	Recommended	minOcc 0 maxOcc 1 minLength 1 maxLength 20
Comment: *This is the student's ID at the source or sending school. It is recommended that this ID number be included, even if the student ID number used is an Agency Assigned ID.*				

Tag Name	Schema Use	Description	Recommended Use	Format
SIN	Optional	The person's Canadian Social Insurance Number	Not Recommended	minOcc 0 maxOcc 1 minLength 9 maxLength 9
Comment: *This is a Canadian student's Social Insurance Number assigned by the Canadian government. It is not appropriate for the Transcript sent by a US school. Neither is it recommended in Canada for use to identify students on education records.*				
NSN	Optional	Canadian National Student Number Identifier	Optional	minOcc 0 maxOcc 1 minLength 1 maxLength 30
Comment: *This is a postsecondary Canadian student's National Student Number assigned by postsecondary schools using the format used by Statistics Canada. It is not appropriate for use on the transcript to identify a US student.*				
AgencyAssignedID	Optional	The ID assigned by the state or province or an agency, to the person (student).	Recommended	minOcc 0 maxOcc 1 minLength 1 maxLength 30
Comment: *If this data element is included, it is helpful if the state or agency identify is placed in the first several positions of this field. For example, if this is a state of Florida assigned ID, then the value might be "FL12345678902334".*				
RecipientAssignedID	Optional	Recipient Asigned Identifier Type	Recommended	minOcc 0 maxOcc 1 minLength 1 maxLength 20
Comment: *If this transcript is being sent in response to a request for the transcript from another institution, then this is the student's ID number at the school that requested the record.*				
SSN	Optional	The person's U.S. Social Security Number	Recommended	pattern \d{9} minOcc 0 maxOcc 1
Comment: *If included, this number must be sent as a string of nine numbers with no dashes. While the SSN is no longer appropriate for use as a student identifier in a school's data base, it is extremely helpful for the receiving school or agency to match the student's record there.*				
Birth	Optional	Identifying information related to a person's birth	Recommended	minOcc 0 maxOcc 1
Comment: *This complex data element will be expanded on page 46 which follows. This information is very helpful in matching the transcript with the student's record at the receiving institution. It is almost essential if the SSN is not included.*				
Name	Required	The name of record at the sending institution	Required	minOcc 1 maxOcc 1
Comment: *This should be the full legal name of the student as recorded at the sending institution. This complex data element will be expanded on page 48 which follows.*				
AlternateName	Optional Repeatable	Any other names by which the person may be known	Optional	minOcc 0 maxOcc ∞
Comment: *Includes former name(s), nicknames, or other names by which the student may be known. This complex data element will be expanded on page 50 which follows.*				
HighSchool	Optional	This is information to identify the high school from which the student graduated, or the last high school the student attended	Optional	minOcc 0 maxOcc 1
Comment: *Useful for matching. This complex data element will be expanded on page 52 which follows.*				
Contacts	Optional Repeatable	Contact information for the student as recorded by the sending institution	Recommended	minOcc 0 maxOcc ∞
Comment: *This is helpful for creating a record when the receiving institution has not previously been contacted by the student. It may also help to match this transcript with the student's record at the receiving school, especially if the SSN is not included. This complex data element will be expanded on page 55 which follows.*				

Tag Name	Schema Use	Description	Recommended Use	Format
Gender	Optional	Gender of the student	Recommended	minOcc 0 maxOcc 1
Comment: *Useful for matching. Although AACRAO does not recommend including this information on the paper transcript, it is recommended to be included on the XML electronic transcript if the destination is to a postsecondary institution or other governmental agency. This complex data element will be expanded on page 66 which follows.*				
Residency	Optional	An indication of the student's place of permanent residency for fee purposes	Optional	minOcc 0 maxOcc 1
Comment: *May be helpful for determining permanent residency for fee purposes at the receiving school, if the receiving school has a differential fee for permanent residents. This complex data element will be expanded on page 67 which follows.*				
Deceased	Optional	Information related a student's death	Optional	minOcc 0 maxOcc 1
Comment: *Recommended if the student is deceased; useful for fraud prevention. This complex data element will be expanded on page 69 which follows.*				
NoteMessage	Optional Repeatable	Additional information about the person	Not Recommended	minOcc 0 maxOcc ∞ minLength 1 maxLength 80

Code illustration:

```
<Person>
    <SchoolAssignedPersonID>5555555</SchoolAssignedPersonID>
    <SIN/>
    <NSN/>
    <AgencyAssignedID>FL130123456789</AgencyAssignedID>
    <RecipientAssignedID/>
    <SSN>555555555</SSN>
    <Birth>

    </Birth>
    <Name>

    </Name>
    <AlternateName>

    </AlternateName>
    <HighSchool>

    </HighSchool>
    <Contacts>

    </Contacts>
    <Gender>

    </Gender>
    <Residency>

    </Residency>
    <Deceased>

    </Deceased>
    <NoteMessage />
</Person>
```

Student.Person.Birth

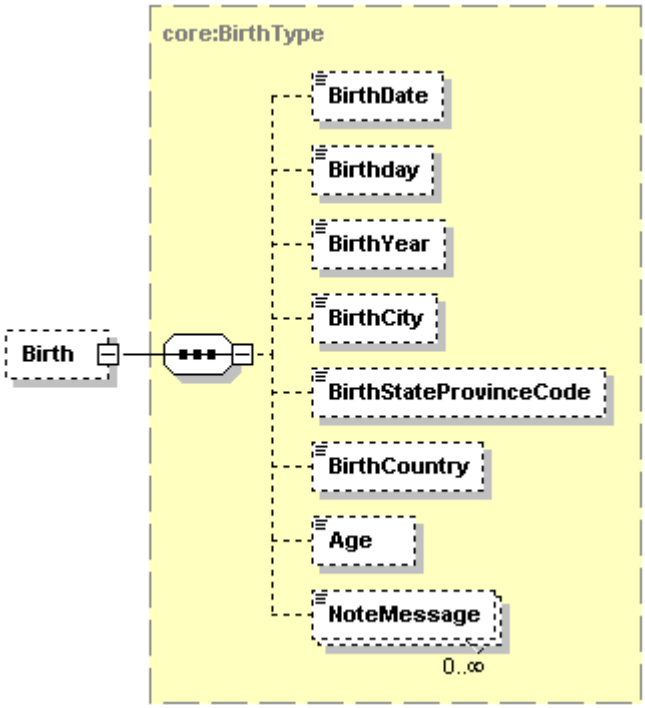

Tag Name	Schema Use	Description	Recommended Use	Format
BirthDate	Optional	Date of Birth	Recommended	minOcc 0 maxOcc 1 xs:date Format is ccyy-mm-dd
Comment: *This is the preferred format to include the complete date of birth of the student. It is very helpful in matching this transcript with the student record at the receiving school.*				
Birthday	Optional	Month and Day of Birth	Optional	minOcc 0 maxOcc 1 xs:gMonthDay Format is --mm-dd
Comment: *The date of birth without the year of birth. The format is mm-dd preceded by two dashes. It is sometimes used on the paper transcript in an attempt to reduce age discrimination.*				
BirthYear	Optional	Year of birth of the student	Not Recommended	minOcc 0 maxOcc 1 g:Year where Format is ccyy
BirthCity	Optional	The city where the student was born	Optional	minOcc 0 maxOcc 1 minLength 1 maxLength 25
Comment: *It would be quite unusual to find the birth city on a college transcript.*				
BirthStateProvinceCode	Optional	The state or province where the student was born	Optional	minOcc 0 maxOcc 1 See Appendix A
BirthCountry	Optional	The country in which the student was born	Optional	minOcc 0 maxOcc 1 See Appendix B1 or B2

Tag Name	Schema Use	Description	Recommended Use	Format
Age	Optional	The age of the student at the time the record (transcript) was created	Not Recommended	minOcc 0 maxOcc 1 xs:positiveinteger
NoteMessage	Optional Repeatable	Additional information about Birth	Not Recommended	minOcc 0 maxOcc ∞ minLength 1 maxLength 80

Code illustration:

```
<Birth>
    <BirthDate>1987-07-20</BirthDate>
    <Birthday/>
    <BirthYear/>
    <BirthCity/>
    <BirthStateProvinceCode>GA</BirthStateProvinceCode>
    <BirthCountry>US</BirthCountry>
    <Age/>
    <NoteMessage/>
</Birth>
```

Student.Person.Name

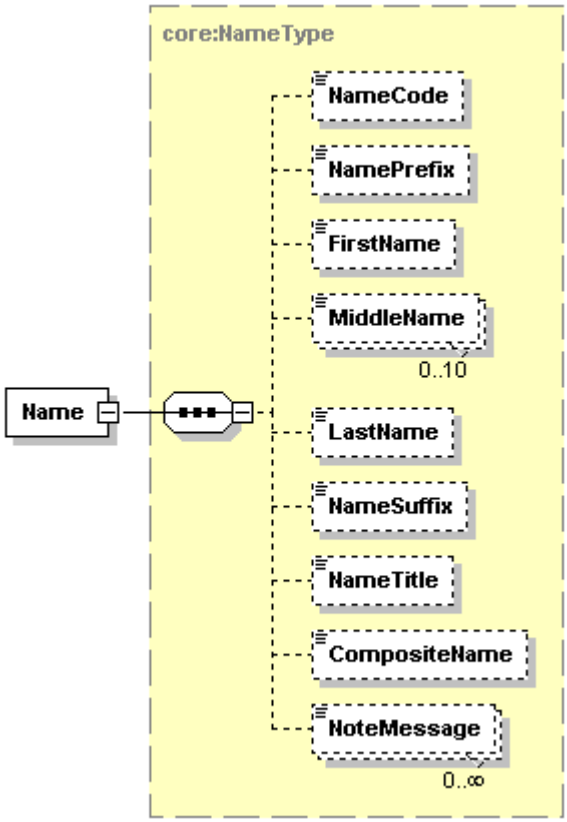

Tag Name	Schema Use	Description	Recommended Use	Format
NameCode	Optional	The type of name being included in the transcript for the student	Recommended	minOcc 0 maxOcc 1 **Enumerations:** Casual Formal Former LawSchoolApplication Source Legal MedicalSchoolApplicat ionSource Nickname Other
NamePrefix	Optional	An honorific, title or form of address that precedes the name.	Not Recommended	minOcc 0 maxOcc 1 minLength 1 maxLength 30
FirstName	Optional	The first name of the person, usually given at birth, baptism, or during, another ceremony, or through legal change	Recommended	minOcc 0 maxOcc 1 minLength 1 maxLength 35
MiddleName	Optional Repeatable	A secondary name of the person, usually given at birth, baptism, or during another naming ceremony or through legal change	Recommended	minOcc 0 maxOcc 10 minLength 1 maxLength 35
LastName	Optional	The last name or surname by which a	Recommended	minOcc 0

Tag Name	Schema Use	Description	Recommended Use	Format
		person is legally known		maxOcc 1 minLength 1 maxLength 35
NameSuffix	Optional	The expression of an individual's generation within a family.	Recommended	minOcc 0 maxOcc 1 **Enumerations:** JR SR I II III IV V VI VII VIII IX X
NameTitle	Optional	An honorific, title or credential that follows the name.	Not Recommended	minOcc 0 maxOcc 1 minLength 1 maxLength 30
CompositeName	Optional	The full name of the person in Last NameSuffix, First Middle order; comma after last name or NameSuffix	Not Recommended	minOcc 0 maxOcc 1 minLength 1 maxLength 45
Comment: *The use of the Composite Name, while it is allowed, is not recommended. It is felt that the storing of a person's name in schools' student information systems as individual components is becoming more common. And it should be easier for the sending school to break up a composite name into its individual components, than for the receiving school to do so.*				
NoteMessage	Optional Repeatable	Additional information about the student name	Not Recommended	minOcc 0 maxOcc ∞ minLength 1 maxLength 80

Code illustration:

```
<Name>
    <NameCode>Legal</NameCode>
    <NamePrefix/>
    <FirstName>John</FirstName>
    <MiddleName>Billy</MiddleName>
    <MiddleName>Bob</MiddleName>
    <LastName>Thornton</LastName>
    <NameSuffix>JR</NameSuffix>
    <NameTitle/>
    <CompositeName/>
    <NoteMessage/>
</Name>
```

Student.Person.AlternateName

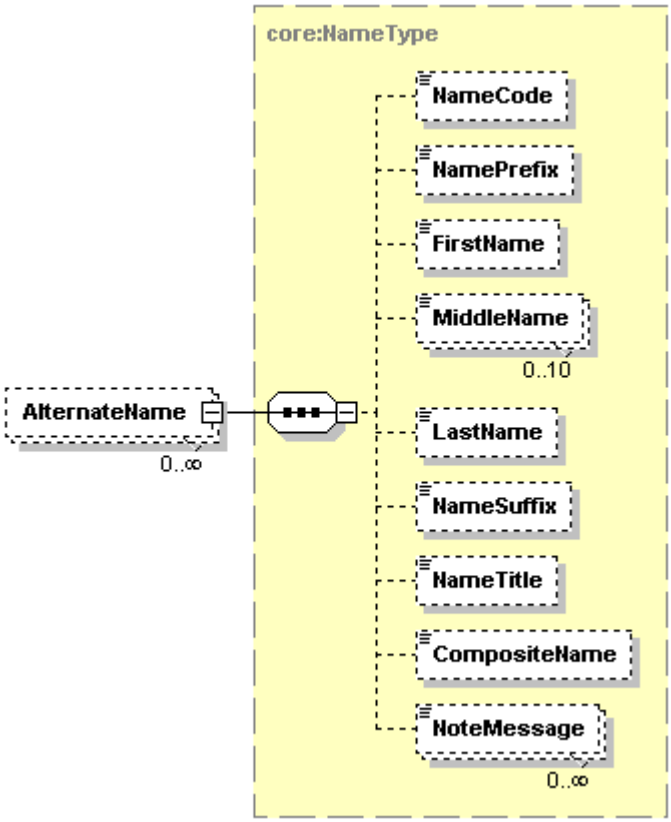

Tag Name	Schema Use	Description	Recommended Use	Format
NameCode	Optional	The type of name being included in the transcript for the student	Recommended	minOcc 0 maxOcc 1 **Enumerations:** Casual Formal Former LawSchoolApplicationSource Legal MedicalSchoolApplicationSource Nickname Other
NamePrefix	Optional	An honorific, title or form of address that precedes the name.	Not Recommended	minOcc 0 maxOcc 1 minLength 1 maxLength 30
FirstName	Optional	The first name of the person, usually given at birth, baptism, or during, another ceremony, or through legal change	Recommended	minOcc 0 maxOcc 1 minLength 1 maxLength 35
MiddleName	Optional Repeatable	A secondary name of the person, usually given at birth, baptism, or during another naming ceremony or through legal change	Recommended	minOcc 0 maxOcc 10 minLength 1 maxLength 35

Tag Name	Schema Use	Description	Recommended Use	Format
LastName	Optional	The last name or surname by which a person is legally known	Recommended	minOcc 0 maxOcc 1 minLength 1 maxLength 35
NameSuffix	Optional	The expression of an individual's generation within a family.	Recommended	minOcc 0 maxOcc 1 **Enumerations:** JR SR I II III IV V VI VII VIII IX X
NameTitle	Optional	An honorific, title or credential that follows the name.	Not Recommended	minOcc 0 maxOcc 1 minLength 1 maxLength 30
CompositeName	Optional	The full name of the person in Last, First Middle order, comma after last name	Not Recommended	minOcc 0 maxOcc 1 minLength 1 maxLength 45
Comment: *The use of the Composite Name, while it is allowed, is not recommended. It is felt that the storing of a person's name in schools' student information systems as individual components is becoming more common. And it should be easier for the sending school to break up a composite name into its individual components, than for the receiving school to do so.*				
NoteMessage	Optional Repeatable	Additional information about the alternate name	Not Recommended	minOcc 0 maxOcc ∞ minLength 1 maxLength 80
Comment: *Sending of alternate names may sometimes help in the matching of this transcript with the student's record at the receiving institution.*				

Code illustration:

```
<AlternateName>
    <NameCode>Nickname</NameCode>
    <NamePrefix/>
    <FirstName>Butch</FirstName>
    <MiddleName/>
    <LastName/>
    <NameSuffix/>
    <NameTitle/>
    <CompositeName/>
    <NoteMessage/>
</AlternateName>
```

Student.Person.HighSchool

Although the complex data element "HighSchool" is optional, if you choose to include it in the transcript, then you must include the name of the high school (OrganizationName).

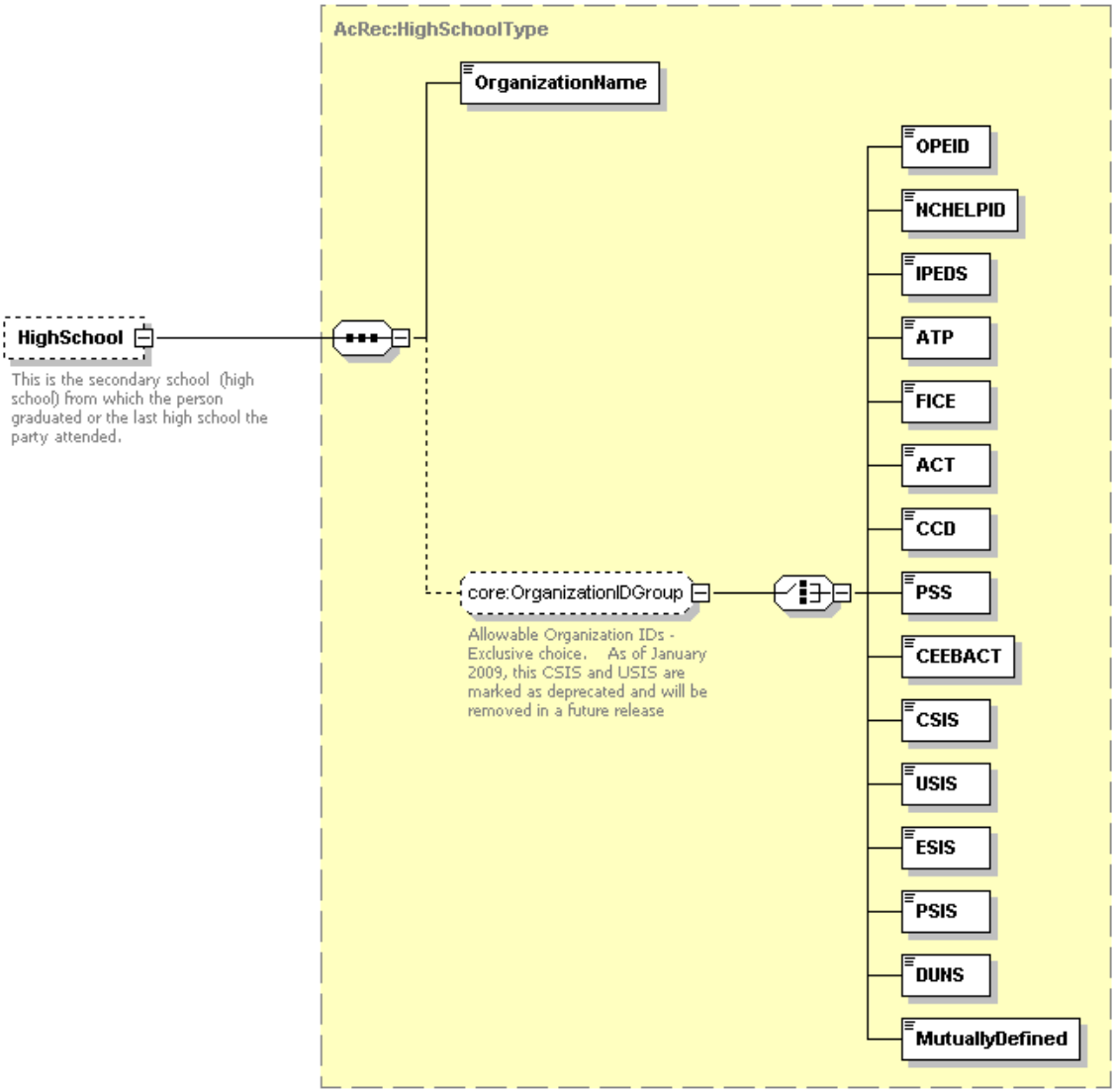

Tag Name	Schema Use	Description	Recommended Use	Format
OrganizationName	Required	Name of Non-person entity such as Organization, Institution, Agency or Business.	Required	minOcc 0 maxOcc 1 minLength 1 maxLength 60
Comment: *This is the name of the sending high school from which the student graduated, or the name of the high school the student last attended.*				

Tag Name	Schema Use	Description	Recommended Use	Format
[OrganizationIDGroup]	Optional	Allowable Organization IDs - Exclusive choice	Optional	minOcc 0 maxOcc 1
Comment: *[OrganizationIDGroup] is not an XML tag and does not appear in an instance document. It requires the choice of one and only one of the following code set tags to identify the institution/organization.*				
OPEID	Optional choice	The unique identifier assigned by the Office of Postsecondary Education for each data exchange partner.	Not Recommended	minOcc 0 maxOcc 1 minLength 3 maxLength 8
Comment: *The OPEID would not normally be an appropriate choice in this case since this code set does not include high schools.*				
NCHELPID	Optional choice	The unique identifier assigned by National Council on Higher Education Loan Programs for each data exchange partner.	Not Recommended	minOcc 0 maxOcc 1 minLength 3 maxLength 8
Comment: *The NCHELPID would not normally be an appropriate choice in this case since this code set does not include high schools.*				
IPEDS	Optional choice	The unique identifier for Integrated Postsecondary Education Data System assigned by the National Center for Education Statistics for each postsecondary data exchange partner.	Not Recommended	minOcc 0 maxOcc 1 minLength 6 maxLength 6
Comment: *The NCHELPID would not normally be an appropriate choice in this case since this code set does not include high schools.*				
ATP	Optional choice	The unique identifier for the Admissions Testing Program assigned by the College Board for each data exchange partner.	Not Recommended	minOcc 0 maxOcc 1 minLength 6 maxLength 6
Comment: *The ATP would not normally be an appropriate choice in this case since this code set does not include high schools.*				
FICE	Optional choice	The unique identifier once maintained for the Federal Interagency Committee on Education by the National Center for Education Statistics for each postsecondary data exchange partner.	Not Recommended	minOcc 0 maxOcc 1 minLength 6 maxLength 6
Comment: *The FICE would not normally be an appropriate choice in this case since this code set does not include high schools.*				
ACT	Optional choice	The unique identifier for postsecondary educational institutions assigned by American College Testing available at www.act.org	Not Recommended	minOcc 0 maxOcc 1 minLength 4 maxLength 4
Comment: *The ACT would not normally be an appropriate choice in this case since this code set does not include high schools.*				
CCD	Optional choice	The unique identifier assigned by National Center for Education Statistics as the Common Core of Data for each data exchange partner.	Recommended choice	minOcc 0 maxOcc 1 minLength 12 maxLength 12
Comment: *The CCD Is a recommended choice to identify high schools in the US.*				
PSS	Optional choice	The unique identifier assigned by the US Department of Education's National Center for Education Statistics for private K12 schools	Recommended choice	minOcc 0 maxOcc 1 minLength 8 maxLength 8
Comment: *The PSS code set is a recommended choice to identify private high schools in the US.*				
CEEBACT	Optional choice	The unique identifier assigned by the College Entrance Examining Board and ACT for each K-12 data exchange partner.	Recommended choice	minOcc 0 maxOcc 1 minLength 6 maxLength 6

Tag Name	Schema Use	Description	Recommended Use	Format
Comment: *The CEEBACT code set is a recommended choice to identify postsecondary school senders.*				
CSIS	Optional choice	The unique identifier assigned by the Statistics Canada Canadian College Student Information System for each college data exchange partner.	Not Recommended	minOcc 0 maxOcc 1 minLength 6 maxLength 6
Comment: *The CSIS code set does not include high schools and has been replaced by the PSIS code set included below.*				
USIS	Optional choice	The unique identifier assigned by the Statistics Canada University Student Information System for each university data exchange partner.	Not Recommended	minOcc 0 maxOcc 1 minLength 6 maxLength 6
Comment: *The USIS code set does not include high schools and has been replaced by the PSIS code set included below.*				
ESIS	Optional choice	The unique identifier assigned by the Statistics Canada Enhanced Student Information System for each data postsecondary exchange partner.	Not Recommended	minOcc 0 maxOcc 1 minLength 8 maxLength 8
Comment: *The ESIS code set does not include high schools and has been replaced by the PSIS code set included below.*				
PSIS	Optional choice	The unique identifier assigned by the Statistics Canada Enhanced Student Information System for each postsecondary data exchange partner.	Not Recommended	minOcc 0 maxOcc 1 minLength 8 maxLength 8
Comment: *The PSIS code set does not include high schools.*				
DUNS	Required choice	Data Universal Numbering System (DUNS), unique nine character company identification number issued by Dun and Bradstreet Corporation.	Not Recommended	minOcc 0 maxOcc 1 minLength 9 maxLength 9
Comment: *The DUNS number would not be a normal choice to identify a high school.*				
MutuallyDefined	Optional choice	This code set could be used by a selected set of trading partners if none of the other above code sets is appropriate.	Optional choice	minOcc 0 maxOcc 1 minLength 1 maxLength 60
Comment: *Since this is an optional set of choice code sets, it would be quite unlikely to include this Mutually Defined choice, in addition to the name of the high school.*				
Comment: *End of OrganizationIDGroup choice set tags*				

Code illustration:

```
<HighSchool>
    <OrganizationName>Central High School</OrganizationName>
    <CEEBACT>123456</CEEBACT>
</HighSchool>
```

Student.Person.Contacts

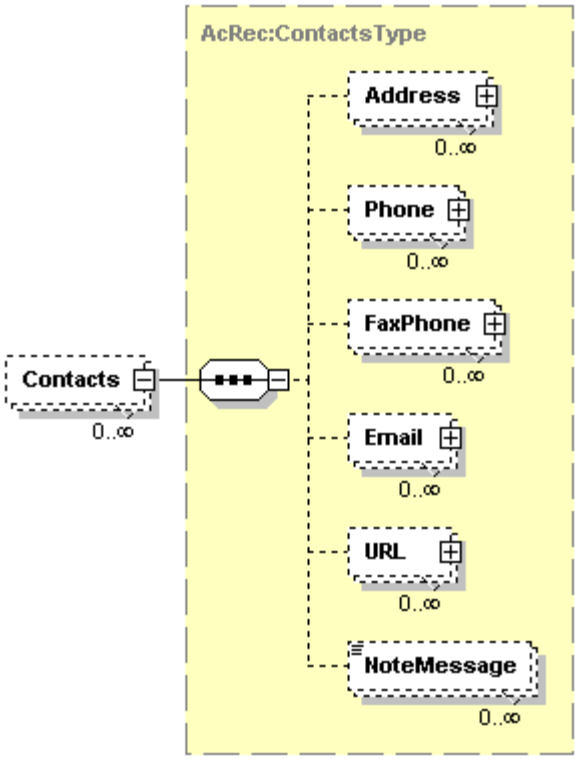

Tag Name	Schema Use	Description	Recommended Use	Format
Address	Optional Repeatable	This is a combined Address Group for a choice between Domestic or International	Recommended	minOcc o maxOcc ∞
Comment: *This complex data element will be expanded on page 57 which follows.*				
Phone	Optional Repeatable	Phone number(s) for the student	Recommended	minOcc o maxOcc ∞
Comment: *This complex data element will be expanded on page 60 which follows.*				
FaxPhone	Optional Repeatable	Fax phone number(s) for the student	Recommended	minOcc o maxOcc ∞
Comment: *This complex data element will be expanded on page 62 which follows.*				
Email	Optional Repeatable	Email address(es) for the student	Recommended	minOcc o maxOcc ∞
Comment: *This complex data element will be expanded on page 64 which follows.*				
URL	Optional Repeatable	Personal URL(s) on record for the student	Not Recommended	minOcc o maxOcc ∞
Comment: *This complex data element will be expanded on page 65 which follows.*				

Tag Name	Schema Use	Description	Recommended Use	Format
NoteMessage	Optional Repeatable	Additional information about the Contacts	Not Recommended	minOcc o maxOcc ∞ minLength 1 maxLength 80
Comment: *The inclusion of the contact information about the student whose transcript is being sent can be helpful at the receiving institution for additional matching criteria. It can also be of use at the receiving school (if the student has not yet applied for admission there) to create a skeletal admissions record if that is the procedure at the receiving school, or it may also be used in an attempt to contact the student to encourage the student to submit an application.*				

Student.Person.Contacts (Continued)

Code illustration:

```
<Contacts>
    <Address>

    </Address>
    <Phone>

    </Phone>
    <FaxPhone>

    </FaxPhone>
    <Email>

    </Email>
    <URL>

    </URL>
    <NoteMessage/>
</Contacts>
```

Student.Person.Contacts.Address

Note: Although the complex data element Address is an optional data element, if you choose to send the Address of the Student, then you must send AddressLine and City and also StateProvinceCode, and PostalCode OR CountryCode.

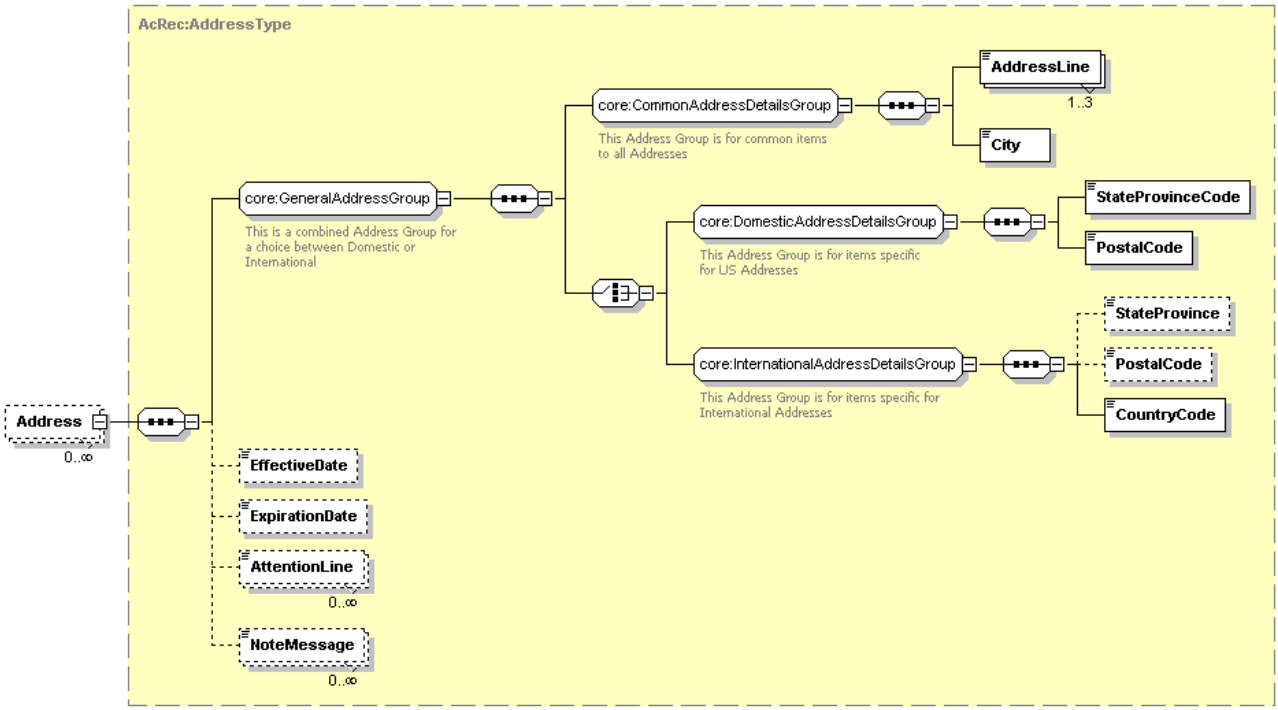

Tag Name	Schema Use	Description	Recommended Use	Format
GeneralAddressGroup	Required	This Address Group is for items common to all Addresses	Required	minOcc 1 maxOcc 1
Comment: *[GeneralAddressGroup] does not appear in the instance document. It requires the use of CommonAddressDetailsGroup and the choice of one of either DomesticAddressDetailsGroup or InternationalAddressDetailsGroup. This group is required in the schema only if you choose to send the address of the student*				
CommonAddressDetailsGroup	Required	This Address Group is for items common to all Addresses	Required	minOcc 1 maxOcc 1
Comment: *[CommonAddressDetailsGroup] does not appear in the instance document. If the address of the student is included In the transcript, then this must be sent. It is required and must be paired with one of either DomesticAddressDetailsGroup or InternationalAddressDetailsGroup.*				
AddressLine	Required Repeatable	Local delivery information such as street, building number, PO box, or apartment portion of a postal address of the student	Required	minOcc 1 maxOcc 3 minLength 1 maxLength 40
City	Required	The city portion of the Address of the student.	Required	minOcc 1 maxOcc 1 minLength 2 maxLength 30

Tag Name	Schema Use	Description	Recommended Use	Format
DomesticAddressDetailsGroup	Required choice	This Address Group is for items specific for US and Canadian Addresses	Required for domestic addresses	minOcc 1 maxOcc 1
Comment: *[*DomesticAddressDetailsGroup*] and does not appear in the instance document. If the complex data element address has a United States or Canadian Postal Code and a US State or Canadian Province Code, then this should be the required choice.*				
StateProvinceCode	Required	Code for US states, etc., and Canadian provinces.	Required	minOcc 1 maxOcc 1 **Enumerations:** See Appendix A
PostalCode	Required	The postal code portion of the Address.	Required	minOcc 1 maxOcc 1 minLength 1 maxLength 17
InternationalAddressDetailsGroup	Required choice	This Address Group is for items specific for International Addresses	Required for international addresses	minOcc 1 maxOcc 1
Comment: *[*InternationalAddressDetailsGroup*] does not appear in the instance document. This choice is for addresses that do not have a US or Canadian postal code.*				
StateProvince	Optional	The literal name of the state, province or territory of a postal address of the source of this document. Use for addresses outside US or Canada.	Recommended Refer to common postal practices of the source country	minOcc 0 maxOcc 1 minLength 2 maxLength 30
Comment: For an internet resource of states or other geographical subdivisions in countries other than the US and Canada, you might choose to refer to the website of the Universal Postal Union at http://www.upu.int				
PostalCode	Optional	The postal code portion of the Address.	Recommended Refer to common postal practices of the source country	minOcc 0 maxOcc 1 minLength 1 maxLength 17
Comment: For an internet resource of states or other geographical subdivisions in countries other than the US and Canada, you might choose to refer to the website of the Universal Postal Union at http://www.upu.int				
CountryCode	Required	Code indicating Country. Use ISO 3166-1 alpha-2 standard.	Required	minOcc 1 maxOcc 1 **Enumerations:** See Appendix B1 or B2
EffectiveDate	Optional	The date when this address for the student became or will become effective	Optional	minOcc 0 maxOcc 1 xs:Date with format of ccyy-mm-dd
ExpirationDate	Optional	The date when this address for the student was or no longer will be valid	Optional	minOcc 0 maxOcc 1 xs:Date with format of ccyy-mm-dd
AttentionLine	Optional	The individual or office name within the postal address where inquiries should be directed.	Optional	minOcc 0 maxOcc ∞ minLength 1 maxLength 45
NoteMessage	Optional Repeatable	Additional information about the addresses of the student	Not recommended	minOcc 0 maxOcc ∞ minLength 1 maxLength 80

Student.Person.Contacts.Address (Continued)

Code illustration 1 (Domestic Address):

```
<Address>
    <AddressLine>1715 W Cesar Chavez</AddressLine>
    <City>Austin</City>
    <StateProvinceCode>TX</StateProvinceCode>
    <PostalCode>78703</PostalCode>
    <EffectiveDate/>
    <ExpirationDate/>
    <AttentionLine/>
    <NoteMessage />
</Address>
```

Code illustration 2 (International Address):

```
<Address>
    <AddressLine>Altova Corporation</AddressLine>
    <AddressLine>Rudolfsplatz 13a/9</AddressLine>
    <City>Wien</City>
    <StateProvince />
    <PostalCode>A-1010</PostalCode>
    <CountryCode>AT</CountryCode>
    <EffectiveDate/>
    <ExpirationDate/>
    <NoteMessage/>
‘   </Address>
```

Student.Person.Contacts.Phone

Note: Although the complex data element Phone is an optional data element, if you choose to send the Phone of the Student, then you must send the data element PhoneNumber.

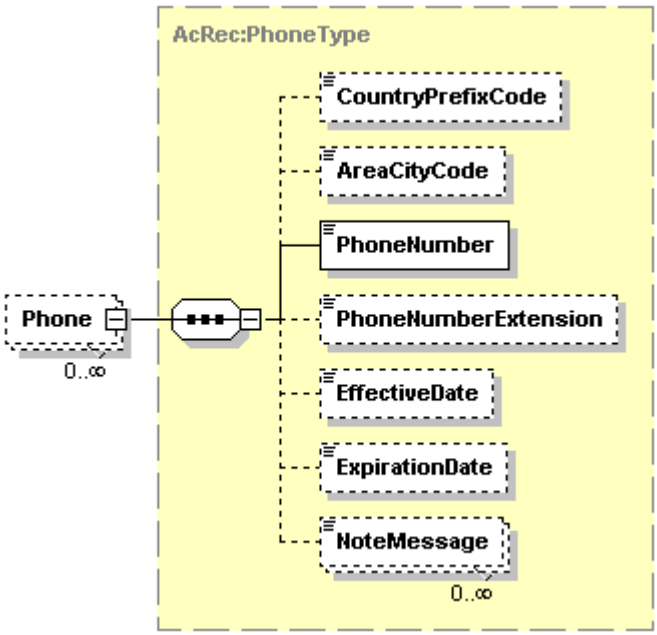

Tag Name	Schema Use	Description	Recommended Use	Format
CountryPrefixCode	Optional	International dialing code.	Optional	minOcc 0 maxOcc 1 minLength 1 maxLength 3
Comment: *For phone numbers in the United States, this is the number "1" or "001", but it is not normally included for US phone number being sent within the US.*				
AreaCityCode	Optional	Regional dialing code.	Recommended	minOcc 0 maxOcc 1 minLength 1 maxLength 5
Comment: *For phone numbers in the United States and Canada, this is the normal three digit area code.*				
PhoneNumber	Required	Telephone number.	Required	minOcc 1 maxOcc 1 minLength 1 maxLength 11
Comment: *The phone number is normally sent as a string of 7 numbers with no dashes or periods.*				
PhoneNumberExtension	Optional	The extended telephone addressing information used in addition to phone number such as a PBX extension, a pager PIN, or FAX sub-address.	Optional	minOcc 0 maxOcc 1 minLength 1 maxLength 5
EffectiveDate	Optional	The date when this phone information for the student became or will become effective	Optional	minOcc 0 maxOcc 1 xs:Date with format ccyy-mm-dd

Tag Name	Schema Use	Description	Recommended Use	Format
ExpirationDate	Optional	The date when this phone information became or will become no longer valid	Optional	minOcc 0 maxOcc 1 xs:Date with format ccyy-mm-dd
NoteMessage	Optional Repeatable	Additional information about the phone number	Not Recommended	minOcc 0 maxOcc ∞ minLength 1 maxLength 80

Code illustration:

```
<Phone>
    <CountryPrefixCode/>
    <AreaCityCode>512</AreaCityCode>
    <PhoneNumber>8888888</PhoneNumber>
    <PhoneNumberExtension/>
    <EffectiveDate/>
    <ExpirationDate/>
    <NoteMessage/>
</Phone>
```

Student.Person.Contacts.FaxPhone

Note: Although the complex data element FaxPhone is an optional data element, if you choose to send the FaxPhone of the Student, then you must send the data element PhoneNumber.

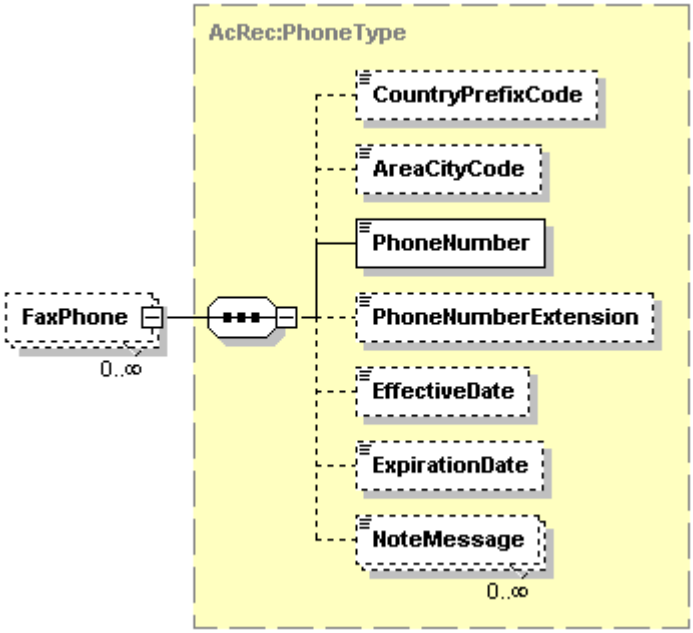

Tag Name	Schema Use	Description	Recommended Use	Format
CountryPrefixCode	Optional	International dialing code.	Optional	minOcc 0 maxOcc 1 minLength 1 maxLength 3
Comment: *For phone numbers in the United States, this is the number "1" or "001", but it is not normally included for US phone number being sent within the US.*				
AreaCityCode	Optional	Regional dialing code.	Recommended	minOcc 0 maxOcc 1 minLength 1 maxLength 5
Comment: *For phone numbers in the United States and Canada, this is the normal three digit area code.*				
PhoneNumber	Required	Telephone number.	Required	minOcc 1 maxOcc 1 minLength 1 maxLength 11
Comment: *The phone number is normally sent as a string of 7 numbers with no dashes or periods.*				
PhoneNumberExtension	Optional	The extended telephone addressing information used in addition to phone number such as a PBX extension, a pager PIN, or FAX sub-address.	Optional	minOcc 0 maxOcc 1 minLength 1 maxLength 5
EffectiveDate	Optional	The date when this fax phone information for the student became or will become effective	Optional	minOcc 0 maxOcc 1 xs:Date with format ccyy-mm-dd

Tag Name	Schema Use	Description	Recommended Use	Format
ExpirationDate	Optional	The date when this fax phone information became or will become no longer valid	Optional	minOcc 0 maxOcc 1 xs:Date with format ccyy-mm-dd
NoteMessage	Optional Repeatable	Additional information about the phone number	Not Recommended	minOcc 0 maxOcc ∞ minLength 1 maxLength 80

Code illustration:

```
<FaxPhone>
    <CountryPrefixCode/>
    <AreaCityCode>512</AreaCityCode>
    <PhoneNumber>8888888</PhoneNumber>
    <PhoneNumberExtension/>
    <EffectiveDate/>
    <ExpirationDate/>
    <NoteMessage/>
</FaxPhone>
```

Student.Person.Contacts.Email

Note: Although the complex data element Email is an optional data element, if you choose to send the Email of the Student, then you must send the data element EmailAddress.

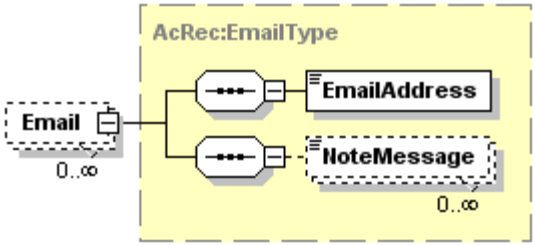

Tag Name	Schema Use	Description	Recommended Use	Format
EmailAddress	Required	The numbers, letters, and symbols used to identify an electronic mail (Email) user within a network.	Required	minOcc 1 maxOcc 1 minLength 1 maxLength 128
NoteMessage	Optional Repeatable	Additional information about the email address	Not recommended	minOcc 0 maxOcc ∞ minLength 1 maxLength 80

Code illustration:

```
<Email>
    <EmailAddress>stewartj@aol.com</EmailAddress>
    <NoteMessage/>
</Email>
```

Student.Person.Contacts.URL

Note: Although the complex data element URL is an optional data element, if you choose to send the URL of the Student, then you must send the data element URLAddress.

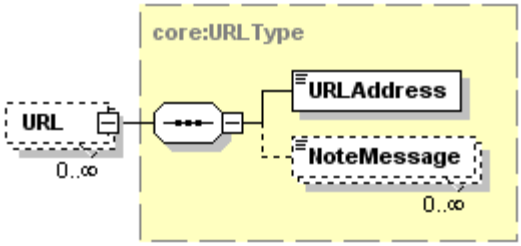

Tag Name	Schema Use	Description	Recommended Use	Format
URLAddress	Required	The Uniform Resource Locator (URL) address associated with a student	Required	minOcc 1 maxOcc 1 minLength 0 maxLength 512
NoteMessage	Optional Repeatable	Additional information about the URL	Not recommended	minOcc 0 maxOcc ∞ minLength 1 maxLength 80

Code illustration:

```
<URL>
    <URLAddress>John.Appleseed.com</URLAddress>
    <NoteMessage/>
</URL>
```

Student.Person.Gender

Note: Although the complex data element Gender is an optional data element, if you choose to send the Gender of the Student, then you must send the data element GenderCode.

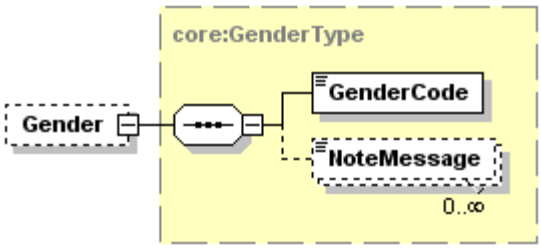

Tag Name	Schema Use	Description	Recommended Use	Format
GenderCode	Required	The gender of the Student	Required	minOcc 1 maxOcc 1 **Enumerations:** Female Male Unreported
NoteMessage	Optional Repeatable	Additional information about Gender	Not Recommended	minOcc 0 maxOcc ∞ minLength 1 maxLength 80

Code illustration:

```
<Gender>
    <GenderCode>Male</GenderCode>
    <NoteMessage/>
</Gender>
```

Student.Person.Residency

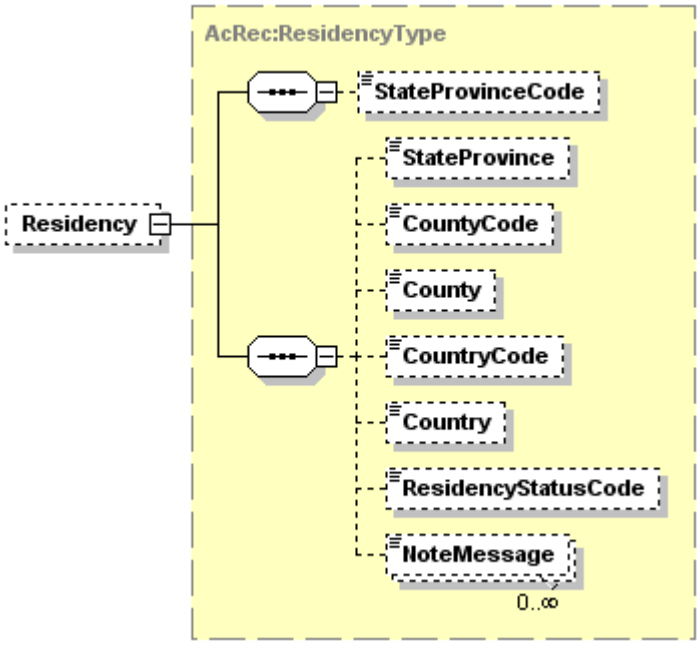

Tag Name	Schema Use	Description	Recommended Use	Format
StateProvinceCode	Optional	Code of US states, etc., and Canadian provinces	Recommended	minOcc 0 maxOcc 1 **Enumerations:** See Appendix A
Comment: *For schools that have fee differentials based on the state or province of permanent residence of the student (or the parent or guardian of a dependent student), this is state or province established by the student at the sending school.*				
StateProvince	Optional	The literal name of the state, province or territory of a postal address. Use for addresses outside US or Canada.	Optional	minOcc 0 maxOcc 1 minLength 2 maxLength 30
CountyCode	Optional	Code indicating County. See code sets for each US state at http://www.itl.nist.gov/fipspubs/co-codes/states.htm#US_TERR_SEC	Optional	minOcc 0 maxOcc 1 minLength 3 maxLength 3
Comment: *The county codes for US states are unique for each state, so it would not be appropriate to include CountyCode without also including StateProvinceCode as well. Also, the county code would be of questionable value to a recipient school in another, non-adjoining state.*				
County	Optional	Free form name of county	Optional	minOcc 0 maxOcc 1 minLength 1 maxLength 30
Comment: *The county name would be of questionable value to a recipient school in another, non-adjoining state.*				
CountryCode	Optional	Code indicating country. Use ISO 3166-1 alpha-2 standard	Optional	minOcc 0 maxOcc 1 **Enumerations:** See Appendix B1 or B2

Tag Name	Schema Use	Description	Recommended Use	Format
Country	Optional	Free-form name of country	Optional	minOcc 0 maxOcc 1 minLength 1 maxLength 30
ResidencyStatusCode	Optional	Residency Classification within a state used to assess tuition and other charges	Optional	minOcc 0 maxOcc 1 **Enumerations:** InCity InCounty InDistrict InState NonResident NotReported OtherResident Resident
NoteMessage	Optional Repeatable	Additional information about the student's resident for fee purposes	Not Recommended	minOcc 0 maxOcc ∞ minLength 1 maxLength 80
Comment: *The Residency data element is only of value and importance to receiving schools that charge a differential fee for permanent residents of the state, or province, or county. And this value diminishes with time. Still, if the information is readily available, it might be of assistance to the admissions staff at the receiving school to make the final residency determination.*				

Code illustration:

```
<Residency>
    <StateProvinceCode>FL</StateProvinceCode>
    <StateProvince>Florida</StateProvince>
    <CountyCode>016</CountyCode>
    <County>Miami-Dade</County>
    <CountryCode>US</CountryCode>
    <Country>United States of America</Country>
    <ResidencyStatusCode>Resident</ResidencyStatusCode>
    <NoteMessage/>
</Residency>
```

Student.Person.Deceased

Note: Deceased is an optional complex data element, but if it is included, then the Deceased Indicator must also be included.

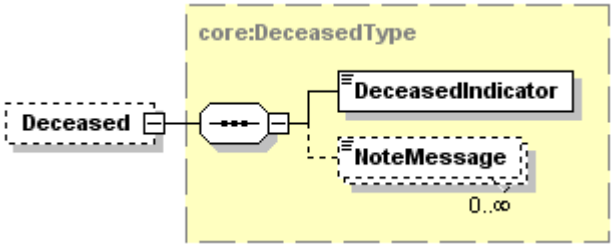

Tag Name	Schema Use	Description	Recommended Use	Format
DeceasedIndicator	Required	Indicates the person is deceased.	Required	minOcc 1 maxOcc 1 true/false
Comment: *A value of 'true' indicates the person is reported as deceased in the sending high school's records. If the student is not shown to be deceased, the complex data element "deceased" would not be sent. This indicator would only be sent if the complex data element Deceased Is included.*				
NoteMessage	Optional Repeatable	Additional information about the deceased status of the student	Not Recommended	minOcc 0 maxOcc ∞ minLength 1 maxLength 80
Comment: *If it is known by the sending institution that the student is deceased, then the inclusion of this indicator can be helpful in preventing the fraudulent use of the transcript by another applicant at the recipient school.*				

Code illustration:

```
<Deceased>
    <DeceasedIndicator>true</DeceasedIndicator>
    <NoteMessage>This student died during his first year at the college.</NoteMessage>
</Deceased>
```

Student.AcademicRecord

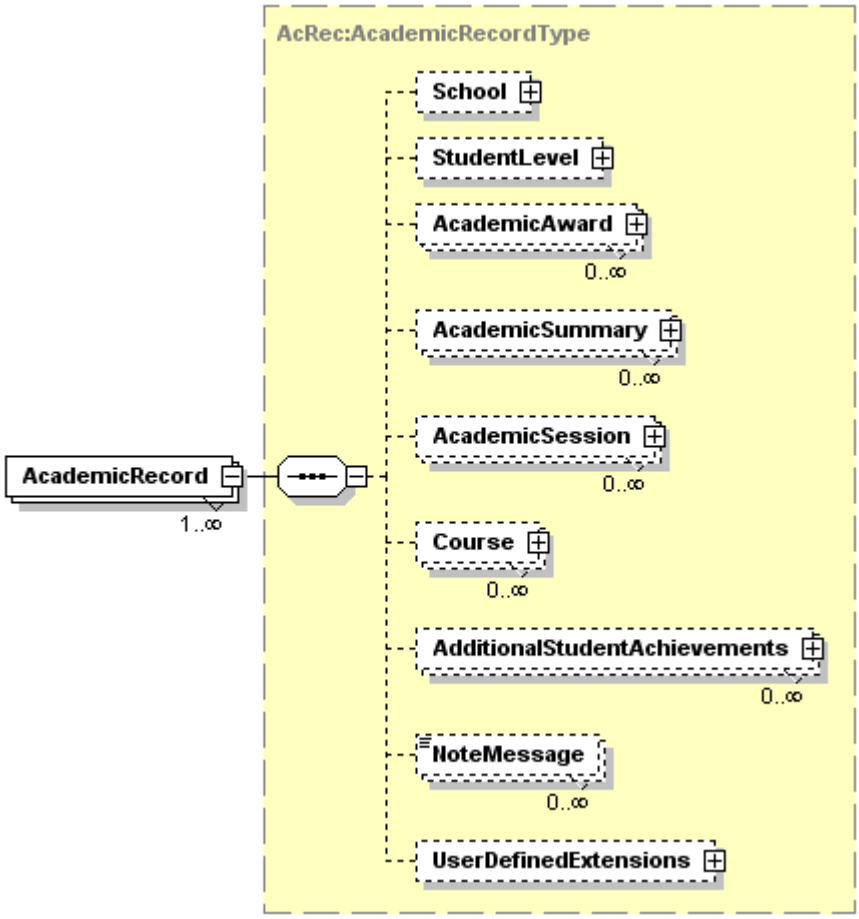

Tag Name	Schema Use	Description	Recommended Use	Format
School	Optional	Override school	Conditional	minOcc 0 maxOcc 1
Comment: *Recommended when the school for this repetition of AcademicRecord differs from the Sending institution. Not Recommended when this AcademicRecord belongs to the Sending institution. This complex data element will be expanded on page 72 which follows.*				
StudentLevel	Optional	Used to indicate the classification or grade level of the student at the time the transcript is being sent, or the last classification or grade level of the student.	Recommended	minOcc 0 maxOcc 1
Comment: *This complex data element will be expanded on page 89 which follows.*				
AcademicAward	Optional Repeatable	Academic awards, degrees, diplomas, certifications, etc. earned by the student	Recommended	minOcc 0 maxOcc ∞
Comment: *AcademicAward in this position is not tied to an AcademicSession. Some institutions may instead wish to indicate AcademicAward in the AcademicSession in which it was earned. However, the Workgroup that developed this transcript schema recommends that the awards be included at this point in the schema. This complex data element will be expanded on page 90 which follows.*				

Tag Name	Schema Use	Description	Recommended Use	Format
AcademicSummary	Optional Repeatable	Used to send summary totals for all work taken at a certain academic level	Recommended	minOcc 0 maxOcc ∞
Comment: *AcademicSummary in this position is not tied to an AcademicSession. Some institutions may instead (or also) wish to include AcademicSummary in the AcademicSession in which it was earned. It is also recommended by the Workgroup that developed the PESC XML College Transcript Schema that this is also the most appropriate place to include the student's rank in class if this information is included on the transcript. This complex data element will be expanded on page 115 which follows.*				
AcademicSession	Optional Repeatable	Course, award and summary information related to a specific time period. Typically arranged into successive semesters or school years and is the preferred method for conveying academic coursework.	Recommended	minOcc 0 maxOcc ∞
Comment: *This complex data element will be expanded on page 126 which follows.*				
Course	Optional Repeatable	Academic coursework not related to a specific academic session.	Optional	minOcc 0 maxOcc ∞
Comment: *Course in this position is not tied to an AcademicSession. It is appropriate here when session information is not known or when the course is not related to a specific academic session. It is recommended to include coursework within academic session whenever possible. This complex data element will be expanded on page 180 which follows.*				
AdditionalStudentAchievements	Optional Repeatable	Achievements not tied to a specific course, session or award.	Optional	minOcc 0 maxOcc ∞
Comment: *This complex data element will be expanded on page 206 which follows.*				
NoteMessage	Optional Repeatable	Additional information about the student's academic record.	Not Recommended	minOcc 0 maxOcc ∞ minLength 1 maxLength 80
UserDefinedExtensions	Optional	Additional structured information. Requires mutually defined XML schema.	Optional	minOcc 0 maxOcc 1

Code illustration:

```
<AcademicRecord>
    <School>

    </School>
    <StudentLevel>

    </StudentLevel>
    <AcademicAward>

    </AcademicAward>
    <AcademicSummary>

    </AcademicSummary>
    <AcademicSession>

    </AcademicSession>
    <Course>

    </Course>
    <AdditionalStudentAchievements>

    </AdditionalStudentAchievements>
    <NoteMessage/>
    <UserDefinedExtensions/>
</AcademicRecord>
```

Student.AcademicRecord.School

Note: School, at this position in the Schema, is an optional complex data element, but if it is included, then the Organization Name (Name of this Override School) must be included. If this is the same as the school in TransmissionData.Source, then this section would not be included.

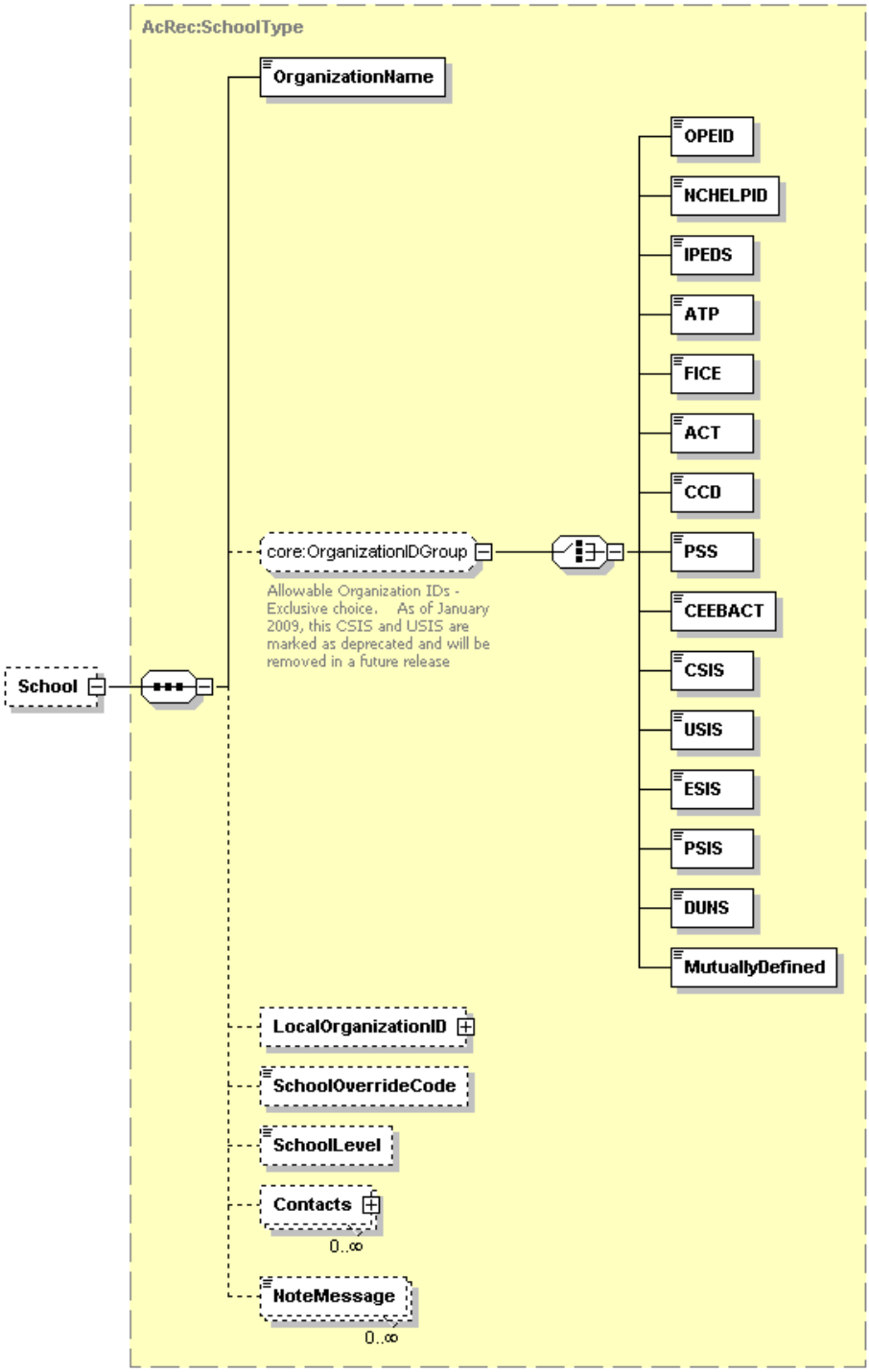

Student.AcademicRecord.School (Continued)

Tag Name	Schema Use	Description	Recommended Use	Format
OrganizationName	Required	Name of Override School.	Required	minOcc 1 maxOcc 1 minLength 1 maxLength 60
Comment: *This is the name of the school where the student earned this academic record, if it is different from the school creating the student's record. If this school is the same as the school creating the student's record, this entire portion of data is not needed and should not be sent.*				
[OrganizationIDGroup]	Optional	Allowable Organization IDs - Exclusive choice	Recommended	minOcc 0 maxOcc 1
Comment: *This is an optional exclusive choice which means that it is not necessary to send any one of the following institutional codes, but if you choose to send one, you may only send one code.*				
OPEID	Optional exclusive choice	The unique identifier assigned by the Office of Postsecondary Education for each data exchange partner.	Recommended choice	minOcc 0 maxOcc 1 minLength 3 maxLength 8
Comment: *This is an acceptable choice for an override school for the transcript if the courses taken were taken at a postsecondary institution.*				
NCHELPID	Optional exclusive choice	The unique identifier assigned by National Council on Higher Education Loan Programs for each data exchange partner.	Not Recommended	minOcc 0 maxOcc 1 minLength 3 maxLength 8
Comment: *This is not an acceptable choice for an override school for the college transcript.*				
IPEDS	Optional exclusive choice	The unique identifier assigned by the National Center for Education Statistics for the Integrated Postsecondary Education Data System for each postsecondary data exchange partner.	Recommended choice	minOcc 0 maxOcc 1 minLength 6 maxLength 6
Comment: *This is an acceptable choice for an override school for the college transcript, if the courses taken were taken at a postsecondary institution.*				
ATP	Optional exclusive choice	The unique identifier assigned for the Admissions Testing Program by the College Board for each postsecondary data exchange partner.	Recommended choice	minOcc 0 maxOcc 1 minLength 6 maxLength 6
Comment: *This is an acceptable choice for an override school for the college transcript if the courses taken were taken at a postsecondary institution.*				
FICE	Optional exclusive choice	The unique identifier assigned for the Federal Interagency Committee on Education by the US Department of Education's Natiional Center for Education Statistics for each postsecondary data exchange partner	Recommended choice	minOcc 0 maxOcc 1 minLength 6 maxLength 6
Comment: *This is an acceptable choice for an override school for the college transcript if the courses taken were taken at a postsecondary institution.*				

Tag Name	Schema Use	Description	Recommended Use	Format
ACT	Optional exclusive choice	The unique identifier assigned by the American College Testing or ACT for each postsecondary data exchange partner. See www.act.org.	Recommended choice	minOcc 0 maxOcc 1 minLength 4 maxLength 4
Comment: *This is an acceptable choice for an override school for the college transcript if the courses taken were taken at a postsecondary institution.*				
CCD	Optional exclusive choice	The unique identifier assigned by the US Department of Education's National Center for Education Statistics as the Common Core of Data for each K12 data exchange partner.	Not Recommended	minOcc 0 maxOcc 1 minLength 12 maxLength 12
Comment: *This is **not** an acceptable choice for an override school for the college transcript if the courses taken were taken at a postsecondary institution.*				
PSS	Optional exclusive choice	The unique identifier assigned by the US Department of Education's National Center for Education Statistics for private K12 schools	Not Recommended	minOcc 0 maxOcc 1 minLength 8 maxLength 8
Comment: *This is **not** an acceptable choice for an override school for the college transcript if the courses taken were taken at a postsecondary institution.*				
CEEBACT	Optional exclusive choice	The unique identifier assigned by the College Entrance Examining Board and ACT for each data exchange partner.	Not Recommended	minOcc 0 maxOcc 1 minLength 6 maxLength 6
Comment: *This is **not** an acceptable choice for an override school for the college transcript if the courses taken were taken at a postsecondary institution.*				
CSIS	Optional exclusive choice	The unique identifier assigned by the Statistics Canada Canadian College Student Information System for each college data exchange partner	Not Recommended	minOcc 0 maxOcc 1 minLength 6 maxLength 6
Comment: *The CSIS code set has been phased out and has been replaced by the PSIS included below.*				
USIS	Optional exclusive choice	The unique identifier assigned by the Statistics Canada University Student Information System for each data exchange partner	Not Recommended	minOcc 0 maxOcc 1 minLength 6 maxLength 6
Comment *The USIS code set has been phased out and has been replaced by the PSIS included below.*				
ESIS	Optional exclusive choice	The unique identifier assigned by the Statistics Canada Enhanced Student Information System for each data exchange partner.	Not Recommended	minOcc 0 maxLength 1 minLength 8 maxLength 8
Comment: *The USIS code set has been phased out and has been replaced by the PSIS included below.*				
PSIS	Optional exclusive choice	The unique identifier assigned by the Statistics Canada Postsecondary Student Information System for each data exchange partner.	Recommended choice	minOcc 0 maxLength 1 minLength 8 maxLength 8
Comment: *The PSIS is the latest code set used in Canada to identify postsecondary schools in Canada.*				

Tag Name	Schema Use	Description	Recommended Use	Format
DUNS	Optional exclusive choice	Data Universal Numbering System (DUNS), unique nine character company identification number issued by Dun and Bradstreet Corporation.	Not Recommended	minOcc 0 maxOcc 1 minLength 9 maxLength 9
Comment: *This is not a common choice for an override school for the college transcript if the courses taken were taken at a postsecondary institution.*				
MutuallyDefined	Optional exclusive choice	A code set that is mutually agreed upon in advance by the participating trading partners	Not Recommended	minOcc 0 maxOcc 1 minLength 1 maxLength 60
Comment: *This is not common choice for an override school for the college transcript if the courses taken were taken at a postsecondary institution.*				
LocalOrganizationID	Optional	A code set typically used by a state, province or region to further identify the school whose record is beng sent	Optional	minOcc 0 maxOcc 1
Comment: *This complex data element will be expanded on page 77 which follows.*				
SchoolOverrideCode	Optional	The source of the academic credit if not awarded by the home or parent institution. Institutional – Institutional Agreement Multicampus – Multiple Campus Course Offering Transfer – Transfer Credit StudyAbroad – Study Abroad Coop – Cooperative Program Reciprocal – Reciprocal Exchange Internship – Internship	Recommended	minOcc 0 maxOcc 1 **Enumerations:** Institutional Multicampus Transfer StudyAbroad Coop Reciprocal Internship
SchoolLevel	Optional	Indicates level of Override School	Recommended	minOcc 0 maxOcc 1 **Enumerations:** Elementary HighSchool JuniorHigh Middle Other Postsecondary Secondary
Contacts	Optional Repeatable	Contact info at Override School	Optional	minOcc 0 maxOcc ∞
Comment: *This complex data element will be expanded on page 78 which follows.*				
NoteMessage	Optional Repeatable	Additional information about the Override School	Not Recommended	minOcc 0 maxOcc ∞ minLength 1 maxLength 80
Comment: *This is not the recommended place in the schema to include information about the school that is sending the student transcript. The recommended place in the schema for that information is under TransmissionData.Source. This is the place to send information about an override school. A typical use would be to indicate the school here that offered courses that the student transferred in to the sending school.*				

Student.AcademicRecord.School (Continued)

Code illustration:

```
<School>
    <OrganizationName>Florida International University</OrganizationName>
     <FICE>001234</FICE>
    <LocalOrganizationID>

    </LocalOrganizationID>
    <SchoolOverrideCode>Transfer</SchoolOverrideCode>
    <SchoolLevel>Postsecondary</SchoolLevel>
    <Contacts>

    </Contacts>
    <NoteMessage/>
</School>
```

Student.AcademicRecord.School.LocalOrganizationID

Note: Although LocalOrganizationID is an optional complex data element, if it is included, then both the LocalOrganizationIDCode and the LocalOrganizationIDQualifier must be included.

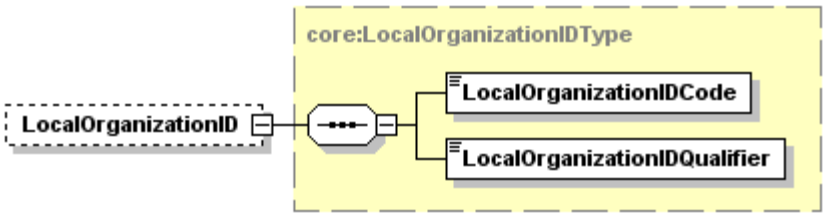

Tag Name	Schema Use	Description	Recommended Use	Format
LocalOrganizationIDCode	Required	The code assigned for the school by the state, province or other mutually defined agency specified in the Local Organization ID Qualifier that follows.	Required	minOcc 1 maxOcc 1 minLength 1 maxLength 35
Comment: *This is a required data element only if the Local Organization ID data element is sent. This is typically the administrative school code assigned by a state or province to identify the override school in that state.*				
LocalOrganizationIDQualifier	Required	This is the state, province or other mutually definded agency that assigned the Local Organization ID Code above.	Required	minOcc 1 maxOcc 1 **Enumerations:** See Appendix A
Comment: *This is a required data element only if the Local Organization ID data element is sent. This is typically the state or province that assigned the code to identify the receiving school in that state.*				

Code illustration:

```
<LocalOrganizationID>
    <LocalOrganizationIDCode>12345678</LocalOrganizationIDCode>
    <LocalOrganizationIDQualifier>IL</LocalOrganizationIDQualifier>
</LocalOrganizationID>
```

Student.AcademicRecord.School.Contacts

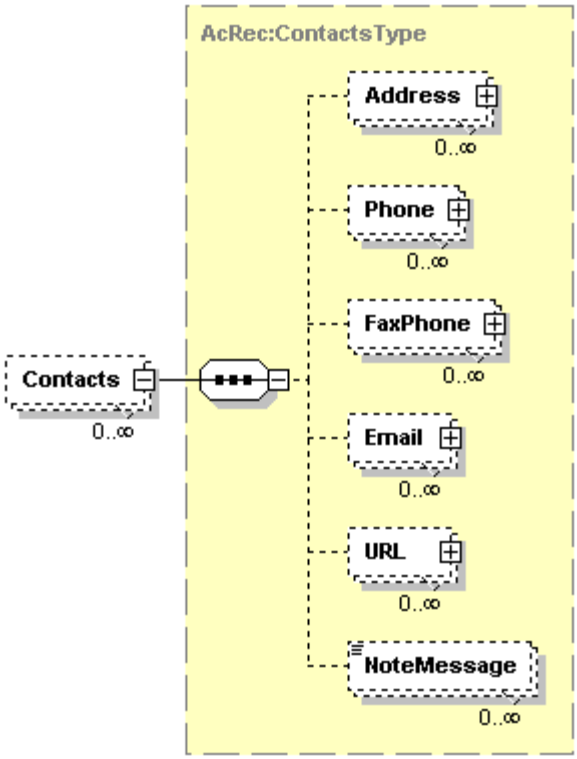

Tag Name	Schema Use	Description	Recommended Use	Format
Address	Optional Repeatable	Address of the Override School	Recommended	minOcc o maxOcc ∞
Comment: *This complex data element will be expanded on page 80 which follows. It is recommended if the address is known and is included in the school's data base.*				
Phone	Optional Repeatable	Phone number of the Override School	Optional	minOcc o maxOcc ∞
Comment: *This complex data element will be expanded on page 83 which follows.*				
FaxPhone	Optional Repeatable	Fax phone number of the Override School	Optional	minOcc o maxOcc ∞
Comment: *This complex data element will be expanded on page 85 which follows.*				
Email	Optional Repeatable	Email Address of the Override School	Optional	minOcc o maxOcc ∞
Comment: *This complex data element will be expanded on page 87 which follows.*				
URL	Optional Repeatable	Universal Resource Locator of the Override School	Optional	minOcc o maxOcc ∞
Comment: *This complex data element will be expanded on page 88 which follows.*				
NoteMessage	Optional Repeatable	Additional information about the contacts at the Override School	Not Recommended	minOcc o maxOcc ∞ minLength 1 maxLength 80

Student.AcademicRecord.School.Contacts (Continued)

Code illustration:

```
<Contacts>
    <Address>

    </Address>
    <Phone>

    </Phone>
    <FaxPhone>

    </FaxPhone>
    <Email>

    </Email>
    <URL>

    </URL>
    <NoteMessage/>
</Contacts>
```

Student.AcademicRecord.School.Contacts.Address

Note: Although the complex data element Address is an optional data element, if you choose to send the Address of an Override School for the Academic Record, then you must send AddressLine and City and also send StateProvinceCode, and PostalCode OR CountryCode.

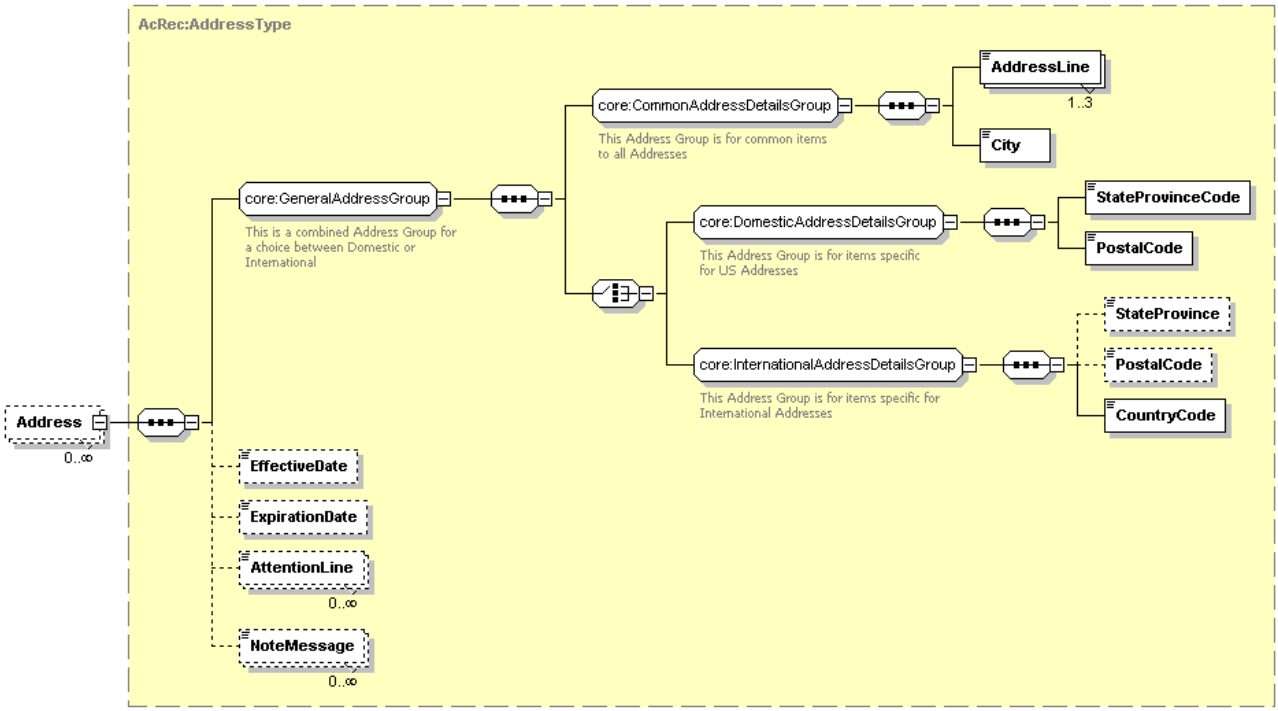

Tag Name	Schema Use	Description	Recommended Use	Format
GeneralAddressGroup	Required	This Address Group is for items common to all Addresses	Required	minOcc 1 maxOcc 1
Comment: *[GeneralAddressGroup] does not appear in the instance document. It requires the use of CommonAddressDetailsGroup and the choice of one of either DomesticAddressDetailsGroup or InternationalAddressDetailsGroup. This group is required in the schema only if you choose to send the address of the contact.*				
CommonAddressDetailsGroup	Required	This Address Group is for items common to all Addresses	Required	minOcc 1 maxOcc 1
Comment: *[CommonAddressDetailsGroup] does not appear in the instance document. If the address of a contact is included In the transcript, then this must be sent. It is required and must be paired with one of either DomesticAddressDetailsGroup or InternationalAddressDetailsGroup.*				
AddressLine	Required Repeatable	Local delivery information such as street, building number, PO box, or apartment portion of a postal address of a Contact at the Override School.	Required	minOcc 1 maxOcc 3 minLength 1 maxLength 40
City	Required	The city portion of the Address of a Contact at the Override School.	Required	minOcc 1 maxOcc 1 minLength 2 maxLength 30

Tag Name	Schema Use	Description	Recommended Use	Format
DomesticAddressDetailsGroup	Required choice	This Address Group is for items specific for US and Canadian Addresses	Required for domestic addresses	minOcc 1 maxOcc 1
Comment: *[*DomesticAddressDetailsGroup*] does not appear in the instance document. If the complex data element address has a United States or Canadian Postal Code and a US State or Canadian Province Code, then this should be the required choice.*				
StateProvinceCode	Required	Code for US states, etc., and Canadian provinces.	Required	minOcc 1 maxOcc 1 **Enumerations:** See Appendix A
PostalCode	Required	The postal code portion of the Address.	Required	minOcc 1 maxOcc 1 minLength 1 maxLength 17
InternationalAddressDetailsGroup	Required choice	This Address Group is for items specific for International Addresses	Required for international addresses	minOcc 1 maxOcc 1
Comment: *[*InternationalAddressDetailsGroup*] does not appear in the instance document. This choice is for addresses that do not have a US or Canadian postal code.*				
StateProvince	Optional	The literal name of the state, province or territory of a postal address of the override school. Use only for addresses outside US or Canada.	Recommended Refer to common postal practices of the source country	minOcc 0 maxOcc 1 minLength 2 maxLength 30
Comment: *For an internet resource of states or other geographical subdivisions in countries other than the US and Canada, you might choose to refer to the website of the Universal Postal Union at http://www.upu.int*				
PostalCode	Optional	The postal code portion of the Address	Recommended Refer to common postal practices of the source country	minOcc 0 maxOcc 1 minLength 1 maxLength 17
Comment: *For an internet resource of states or other geographical subdivisions in countries other than the US and Canada, you might choose to refer to the website of the Universal Postal Union at http://www.upu.int*				
CountryCode	Required	Code indicating Country. Use ISO 3166-1 alpha-2 standard.	Required	minOcc 1 maxOcc 1 **Enumerations:** See Appendix B1 or B2
EffectiveDate	Optional	The date when the override school's address was or will be valid	Optional	minOcc 0 maxOcc 1 xs:Date with format ccyy-mm-dd
ExpirationDate	Optional	The date when the override school's address was or will no longer be valid	Optional	minOcc 0 maxOcc 1 xs:Date with format ccyy-mm-dd
AttentionLine	Optional	The individual or office name within the postal address where inquiries should be directed.	Optional	minOcc 0 maxOcc ∞ minLength 1 maxLength 45
Comment: *This might be used to indicate where questions about the record should be sent. For example, Registrar, Director of Information Technology, etc.*				
NoteMessage	Optional Repeatable	Additional information about the addresses of the contacts at the override school	Not recommended	minOcc 0 maxOcc ∞ minLength 1 maxLength 80

Student.AcademicRecord.School.Contacts.Address (Continued)

Code illustration 1 (Domestic Address):

```
<Address>
    <AddressLine>1715 W Cesar Chavez</AddressLine>
    <City>Austin</City>
    <StateProvinceCode>TX</StateProvinceCode>
    <PostalCode>78703</PostalCode>
    <EffectiveDate/>
    <ExpirationDate/>
    <AttentionLine>Jane Doe</AttentionLine>
     <AttentionLine>GuidanceCounselor</AttentionLine>
    <NoteMessage/>
</Address>
```

Code illustration 2 (International Address):

```
<Address>
    <AddressLine>Altova Corporation</AddressLine>
    <AddressLine>Rudolfsplatz 13a/9</AddressLine>
    <City>Wien</City>
    <StateProvince />
    <PostalCode>A-1010</PostalCode>
    <CountryCode>AT</CountryCode>
    <EffectiveDate/>
    <ExpirationDate/>
    <NoteMessage/>
</Address>
```

Student.AcademicRecord.School.Contacts.Phone

Note: Although Phone is an optional complex data element, if it is included, then the data element PhoneNumber must be included.

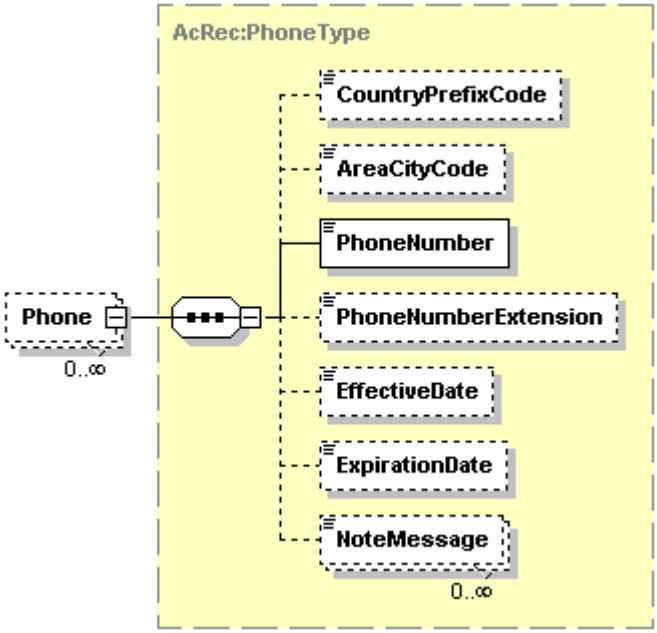

Tag Name	Schema Use	Description	Recommended Use	Format
CountryPrefixCode	Optional	International dialing code.	Optional	minOcc 0 maxOcc 1 minLength 1 maxLength 3
Comment: *For example, the international dialing code for phone numbers in the US is "1" or "001". These codes are typically found in the information pages in the front of a telephone directory for a city or area.*				
AreaCityCode	Optional	Regional dialing code.	Recommended	minOcc 0 maxOcc 1 minLength 1 maxLength 5
PhoneNumber	Required	Telephone number.	Required	minOcc 1 maxOcc 1 minLength 1 maxLength 11
Comment: *The phone number is normally sent as a string of 7 numbers with no dashes or periods.*				
PhoneNumberExtension	Optional	The extended telephone addressing information used in addition to phone number such as a PBX extension, a pager PIN, or FAX sub-address.	Optional	minOcc 0 maxOcc 1 minLength 1 maxLength 5
EffectiveDate	Optional	The date when the phone information about the override school did or will become valid	Optional	minOcc 0 maxOcc 1 xs:Date with format of ccyy-mm-dd
ExpirationDate	Optional	The date when the phone information for the override school was or will no longer be valid	Optional	minOcc 0 maxOcc 1 xs:Date with format of ccyy-mm-dd

Tag Name	Schema Use	Description	Recommended Use	Format
NoteMessage	Optional Repeatable	Additional information about the phone number of the Override School	Not recommended	minOcc 0 maxOcc ∞ minLength 1 maxLength 80

Student.AcademicRecord.School.Contacts.Phone (Continued)

Code illustration:

```
<Phone>
    <CountryPrefixCode />
    <AreaCityCode>512</AreaCityCode>
    <PhoneNumber>4757638</PhoneNumber>
    <PhoneNumberExtension/>
    <EffectiveDate/>
    <ExpirationDate/>
    <NoteMessage />
</Phone>
```

Student.AcademicRecord.School.Contacts.FaxPhone

Note: Although FaxPhone is an optional complex data element, if it is included, then the data element PhoneNumber must be included.

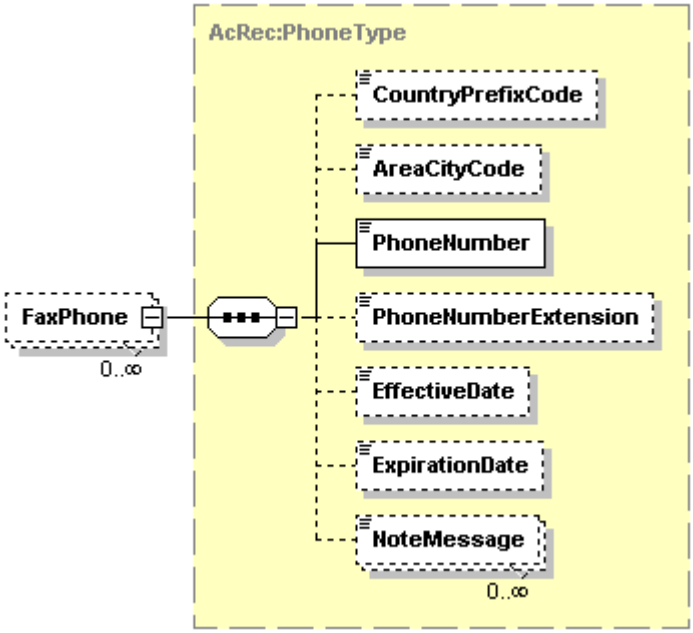

Tag Name	Schema Use	Description	Recommended Use	Format
CountryPrefixCode	Optional	International dialing code.	Optional	minOcc 0 maxOcc 1 minLength 1 maxLength 3
Comment: *For example, the international dialing code for phone numbers in the US is "1" or "001". These codes are typically found in the information pages in the front of a telephone directory for a city or area.*				
AreaCityCode	Optional	Regional dialing code.	Recommended	minOcc 0 maxOcc 1 minLength 1 maxLength 5
PhoneNumber	Required	Telephone number.	Required	minOcc 1 maxOcc 1 minLength 1 maxLength 11
Comment: *The phone number is normally sent as a string of 7 numbers with no dashes or periods.*				
PhoneNumberExtension	Optional	The extended telephone addressing information used in addition to phone number such as a PBX extension, a pager PIN, or FAX sub-address.	Optional	minOcc 0 maxOcc 1 minLength 1 maxLength 5
EffectiveDate	Optional	The date when the fax phone information about the override school did or will become valid	Optional	minOcc 0 maxOcc 1 xs:Date with format of ccyy-mm-dd
ExpirationDate	Optional	The date when the fax phone information for the override school was or will no longer be valid	Optional	minOcc 0 maxOcc 1 xs:Date with format of ccyy-mm-dd

Tag Name	Schema Use	Description	Recommended Use	Format
NoteMessage	Optional Repeatable	Additional information about the fax phone number of the Override School	Not recommended	minOcc 0 maxOcc ∞ minLength 1 maxLength 80

Student.AcademicRecord.School.Contacts.FaxPhone (Continued)

Code illustration:

```
<FaxPhone>
    <CountryPrefixCode />
    <AreaCityCode>512</AreaCityCode>
    <PhoneNumber>4757638</PhoneNumber>
    <PhoneNumberExtension/>
    <EffectiveDate/>
    <ExpirationDate/>
    <NoteMessage/>
</FaxPhone>
```

Student.AcademicRecord.School.Contacts.Email

Note: Although Email is an optional complex data element, if it is included, then the data element EmailAddress must be included.

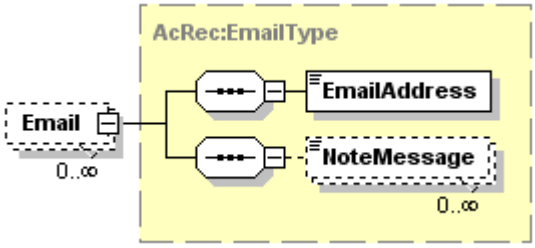

Tag Name	Schema Use	Description	Recommended Use	Format
EmailAddress	Required	The numbers, letters, and symbols used to identify an electronic mail (Email) user within a network	Required	minOcc 1 maxOcc 1 minLength 1 maxLength 128
NoteMessage	Optional Repeatable	Additional information about the email address of the Override School	Not recommended	minOcc 0 maxOcc ∞ minLength 1 maxLength 80

Code illustration:

```
<Email>
    <EmailAddress>Registrar@NumberOneUniversity.edu</EmailAddress>
    <NoteMessage/>
</Email>
```

Student.AcademicRecord.School.Contacts.URL

Note: Although URL is an optional complex data element, if it is included, then the data element URLAddress must be included.

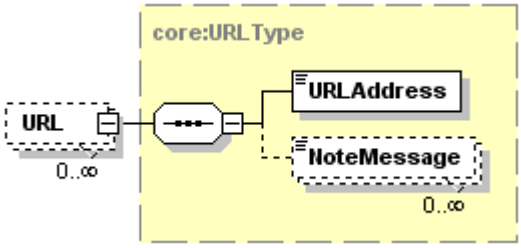

Tag Name	Schema Use	Description	Recommended Use	Format
URLAddress	Required	The Uniform Resource Locator (URL) address associated with a product, deliverable or contact.	Required	minOcc 1 maxOcc 1 minLength 0 maxLength 512
NoteMessage	Optional Repeatable	Additional information about the Uniform Resource Locator address of the Override School	Not recommended	minOcc 0 maxOcc ∞ minLength 1 maxLength 80

Code illustration:

```
<URL>
    <URLAddress>http://www.cua.edu</URLAddress>
    <NoteMessage/>
</URL>
```

Student.AcademicRecord.StudentLevel

Note: Although StudentLevel is an optional complex data element, if it is included, then the data element StudentLevelCode must be included.

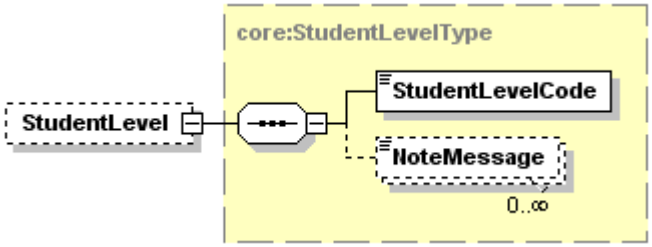

Tag Name	Schema Use	Description	Recommended Use	Format
StudentLevelCode	Required	The current grade level of the student or the highest grade level attained by the student at the time the record was created.	Required	minOcc 1 maxOcc 1 **Enumerations:** Postsecondary PostsecondaryBachelorPreliminaryYear NonDegree CollegeFirstYear CollegeFirstYearAttendedBefore CollegeSophomore CollegeJunior CollegeSenior CollegeFifthYear PostBaccalaureate GraduateNonDegree GraduateFirstYear GraduateSecondYear GraduateThirdYear GraduateBeyondThirdYear Professional ProfessionalFirstYear ProfessionalSecondYear ProfessionalThirdYear ProfessionalBeyondThirdYear MastersQualifying Masters Doctoral Postdoctoral
NoteMessage	Optional Repeatable	Additional information about the student's grade or academic level	Not Recommended	minOcc 0 maxOcc ∞ minLength 1 maxLength 80

Code illustration:

```
<StudentLevel>
    <StudentLevelCode>CollegeJunior</StudentLevelCode>
    <NoteMessage/>
</StudentLevel>
```

Student.AcademicRecord.AcademicAward

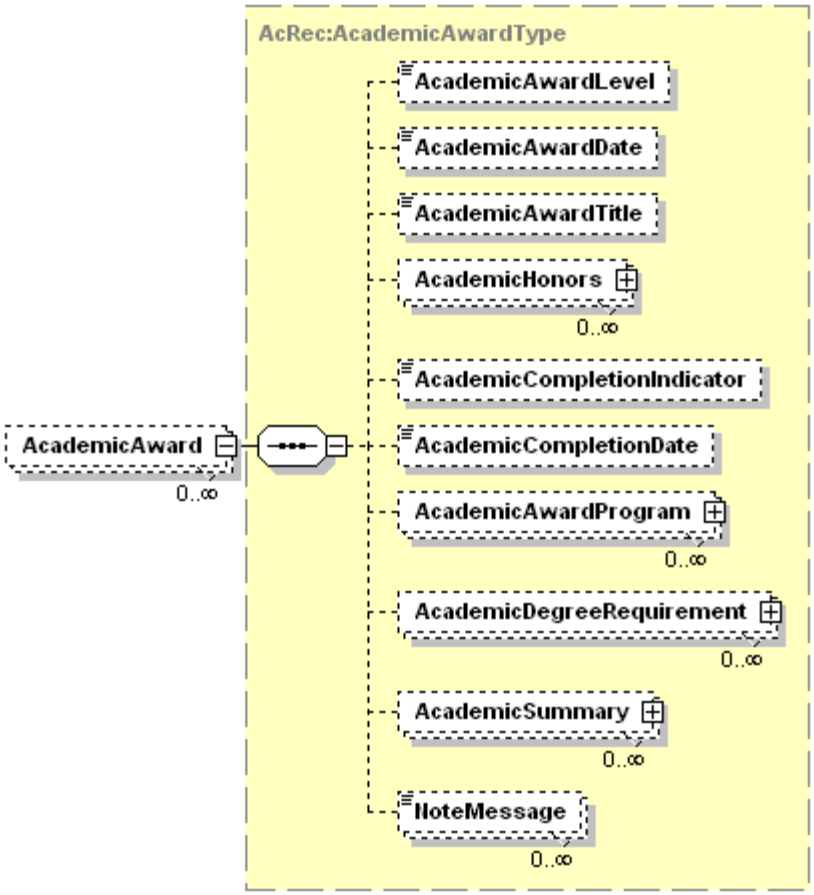

Tag Name	Schema Use	Description	Recommended Use	Format
AcademicAwardLevel	Optional	The level of the degree, certificate, or award granted for the successful completion of requirements of an academic program. 1.1 – Certificate of Completion 1.2 – Certificate of Proficiency 2.0 – Certificate 2.1 – Postsecondary Certificate or Diploma (less than one year) 2.2 – Postsecondary Certificate or Diploma (one year or more, but less than four years) 2.3 – Associate Degree (e.g., Associate in Arts, Associate in Science) 2.4 – Baccalaureate Degree 2.5 – Baccalaureate (Honors) Degree 2.6 – Postsecondary Certificate or Diploma (one year or more, but less than two years)	Recommended	minOcc 0 maxOcc 1 **Enumerations:** 1.1 1.2 2.0 2.1 2.2 2.3 2.4 2.5 2.6 2.7 3.1 3.2 4.1 4.2 4.3 4.4 4.5 FrenchBaccalaureate CEGEP

Tag Name	Schema Use	Description	Recommended Use	Format
		2.7 – PostsecondaryCertificate or Diploma (two years or more, but less than four years) 3.1 – First Professional Degree 3.2 – Post-Professional Degree 4.1 – Graduate Certificate 4.2 – Master's Degree 4.3 – Intermediate Graduate Degree 4.4 – Doctoral Degree 4.5 – Post-doctoral Award FrenchBaccalaureate CEGEP – An award made in select provinces in Canada which includes a high school diploma with the first year of postsecondary education		
AcademicAwardDate	Optional	The date on which the academic award was conferred.	Recommended	minOcc 0 maxOcc 1 xs:date
Comment: *This is the nominal date when the award was granted. It might not be the same as the actual date of completion of the award requirements. The format for date is ccyy-mm-dd. This field can be used for an anticipated graduation date if a value of "false" is also included in the "AcademicCompletionIndicator" which follows below.*				
AcademicAwardTitle	Optional	The descriptive title for the academic award.	Recommended	minOcc 0 maxOcc 1 minLength 1 maxLength 80
AcademicHonors	Optional Repeatable	Honors information for the academic award.	Recommended	minOcc 0 maxOcc ∞
Comment: *This complex data element will be expanded on page 93 which follows.*				
AcademicCompletionIndicator	Optional	An indication that the degree-seeking student completed all of the requirements for his or her academic program. Not used for Non-Degree programs.	Recommended	minOcc 0 maxOcc 1 true/false
Comment: *The value is "true" or "false". The "true" condition would typically be met on or before the date indicated in the "AcademicAwardDate" field, if that field is sent. If neither the completion date nor the award date is included, then sending this indicator is even more important. If an* ***anticipated*** *graduation date is sent in the field AcademicAwardDate above, then it is important that this data element be included with a value of "false".*				
AcademicCompletionDate	Optional	The date on which the student's requirements for the degree were met or completed.	Recommended	minOcc 0 maxOcc 1 xs:date
Comment: *This is the actual date when all requirements for the award were completed. It might not be the same as the nominal date of the award. The format for date is ccyy-mm-dd.*				
AcademicAwardProgram	Optional Repeatable	Information related to the specific area of study (e.g., major) under which the award was granted.	Recommended	minOcc 0 maxOcc ∞
Comment: *This complex data element will be expanded on page 94 which follows.*				

Tag Name	Schema Use	Description	Recommended Use	Format
AcademicDegreeRequirement	Optional Repeatable	Thesis or dissertation information if required for the award.	Recommended	minOcc 0 maxOcc ∞
Comment: *This complex data element will be expanded on page 105 which follows in this Implementation Guide.*				
AcademicSummary	Optional Repeatable	Academic summary information pertaining to the award or diploma.	Optional	minOcc 0 maxOcc ∞
Comment: *This would typically be a summary of all the courses and credits that counted toward the award. This complex data element will be expanded on page 106 which follows.*				
NoteMessage	Optional Repeatable	Additional information about the academic award	Not Recommended	minOcc 0 maxOcc ∞ minLength 1 maxLength 80
Comment: *It is the recommendation of the Workgroup, that this is the most appropriate place to include academic awards. If it is included here, it will facilitate the processing of the award by the recipient.*				

Code illustration:

```
<AcademicAward>
    <AcademicAwardLevel>2.4</AcademicAwardLevel>
    <AcademicAwardDate>1990-05-09</AcademicAwardDate>
    <AcademicAwardTitle>Bachelor of Science</AcademicAwardTitle>
    <AcademicHonors>

    </AcademicHonors>
    <AcademicCompletionIndicator>true</AcademicCompletionIndicator>
    <AcademicCompletionDate>1990-05-01</AcademicCompletionDate>
    <AcademicAwardProgram>

    </AcademicAwardProgram>
    <AcademicDegreeRequirement>

    </AcademicDegreeRequirement>
    <AcademicSummary>

    </AcademicSummary>
    <NoteMessage/>
</AcademicAward>
```

Student.AcademicRecord.AcademicAward.AcademicHonors

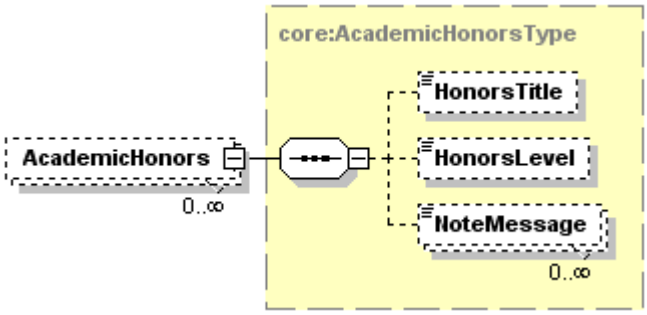

Tag Name	Schema Use	Description	Recommended Use	Format
HonorsTitle	Optional	The descriptive title for the honors received.	Recommended	minOcc 0 maxOcc 1 minLength 1 maxLength 30
Comment: *There is a variety of names for these honors in the United States. Some common ones are "Valdictorian", "Salutatorian", "With Honors", "Magna Cum Laude", etc.*				
HonorsLevel	Optional	A code value representing 1st highest honor, 2nd highest and 3rd highest.	Recommended	minOcc 0 maxOcc 1 **Enumerations:** FirstHighest SecondHighest ThirdHighest
Comment: *Honors Level is critical to understanding the context of Honors Title.*				
NoteMessage	Optional Repeatable	Additional information about the academic honors	Not Recommended	minOcc 0 maxOcc ∞ minLength 1 maxLength 80
Comment: *The information about the award would normally be included with the overall academic record. Therefore, this is the appropriate place to include any honors associated with all awards earned by the student at this school.*				

Code illustration:

```
<AcademicHonors>
    <HonorsTitle>With Honors</HonorsTitle>
    <HonorsLevel>ThirdHighest</HonorsLevel>
    <NoteMessage >
</AcademicHonors>
```

Student.AcademicRecord.AcademicAward.AcademicAwardProgram

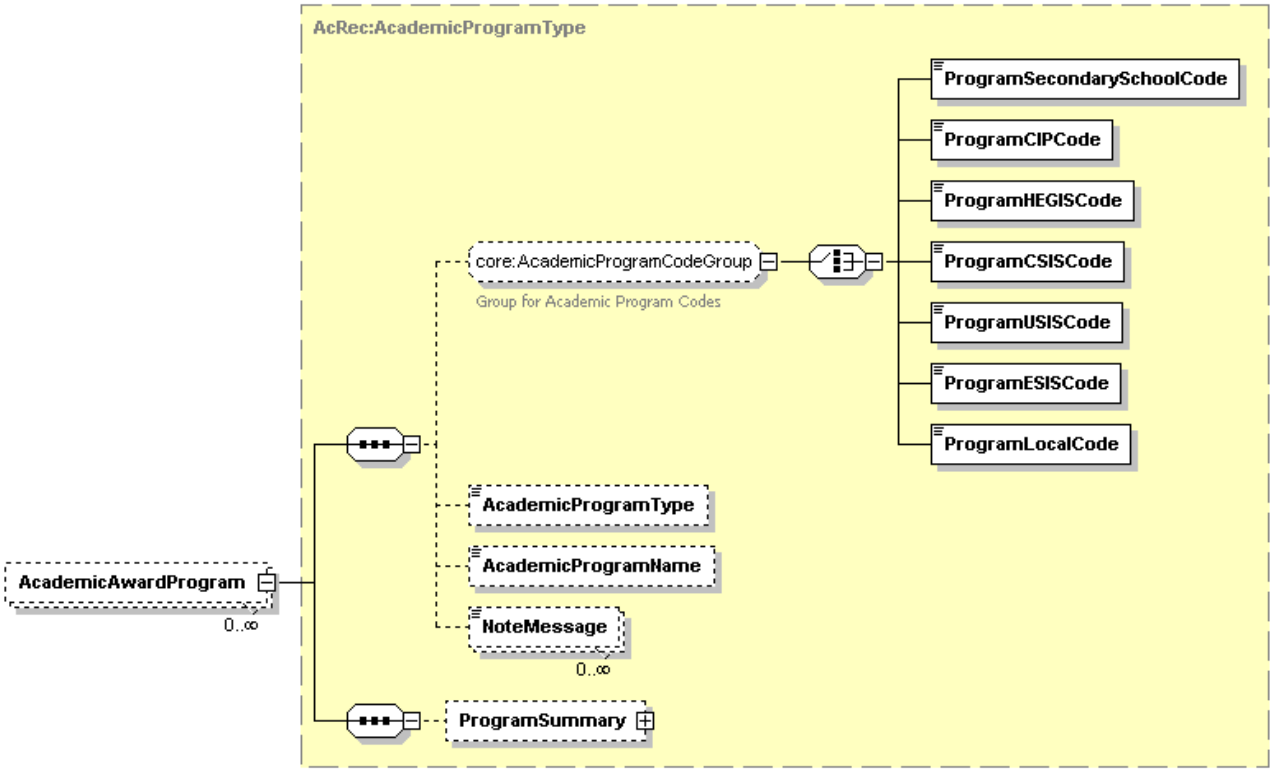

Tag Name	Schema Use	Description	Recommended Use	Format
ProgramSecondarySchoolCode	Optional exclusive choice	Code indicating an academic award goal or field of study for secondary school students	Not Recommended	minOcc 0 maxOcc 1 **Enumerations:** CareerPrep CollegePrep CollegePrepOrCollegeTechPrep CollegeTechPrep General Occupational Vocational
Comment: *The format of the CIP code is either nn.nnnn or nn.nn*				
ProgramCIPCode	Optional exclusive choice	Code indicating a discipline or field of study assigned by the Classification of Instructional Programs by the US Department of Education's National Center for Education Statistics	Recommended choice	minOcc 0 maxOcc 1 minLength 5 maxLength 7
Comment: *The format of the CIP code is either nn.nnnn or nn.nn*				
ProgramHEGISCode	Optional exclusive choice	Code indicating a discipline or field of study assigned by Higher Education General Information Survey	Recommended choice	minOcc 0 maxOcc 1 minLength 6 maxLength 20
ProgramCSISCode	Optional exclusive choice	Code indicating a discipline or field of study assigned by Statistics Canada Canadian College Student Information System	Optional choice	minOcc 0 maxOcc 1 minLength 5 maxLength 5

Tag Name	Schema Use	Description	Recommended Use	Format
ProgramUSISCode	Optional exclusive choice	Code indicating a discipline or field of study assigned by the Statistics Canada University Student Information System.	Optional choice	minOcc 0 maxOcc 1 minLength 5 maxLength 5
ProgramESISCode	Optional exclusive choice	Code indicating a discipline or field of study assigned by the Statistics Canada Postsecondary Student Information System.	Optional choice	minOcc 0 maxOcc 1 minLength 1 maxLength 20
Comment: *The three choices immediately above would only be appropriate for use to describe programs in which students were matriculating at Canadian postsecondary schools*				
ProgramLocalCode	Optional exclusive choice	Code used to describe a specific program at a specific postsecondary school.	Not Recommended	minOcc 0 maxOcc 1 minLength 1 maxLength 20
Comment: *The ProgramLocalCode would primarily be used within one postsecondary school or one postsecondary school system and would not be appropriate for a College Transcript.*				
AcademicProgramType	Optional	Indicates whether the academic program is a major, minor, area of concentration or specialization.	Recommended	minOcc 0 maxOcc 1 **Enumerations:** Concentration Focus Major Minor SecondMajor Specialization
AcademicProgramName	Optional	Literal name of program, major, or field of study.	Optional	minOcc 0 maxOcc 1 minLength 1 maxLength 60
NoteMessage	Optional Repeatable	Additional information about the Academic Award Program	Not Recommended	minOcc 0 maxOcc ∞ minLength 1 maxLength 80
ProgramSummary	Optional	Summary information about the Academic Award Program	Optional	minOcc 0 maxOcc 1
Comment: *This complex data element will be further expanded on page 96 which follows.*				

Code illustration:

```
<AcademicAwardProgram>
    <ProgramCIPCode >45.1002</ProgramCIPCode>
    <AcademicProgramType>Major</AcademicProgramType>
    <AcademicProgramName>Government</AcademicProgramName>
    <NoteMessage/>
    <ProgramSummary>

    </ProgramSummary>
</AcademicAwardProgram>
```

Student.AcademicRecord.AcademicAward.AcademicAwardProgram. ProgramSummary

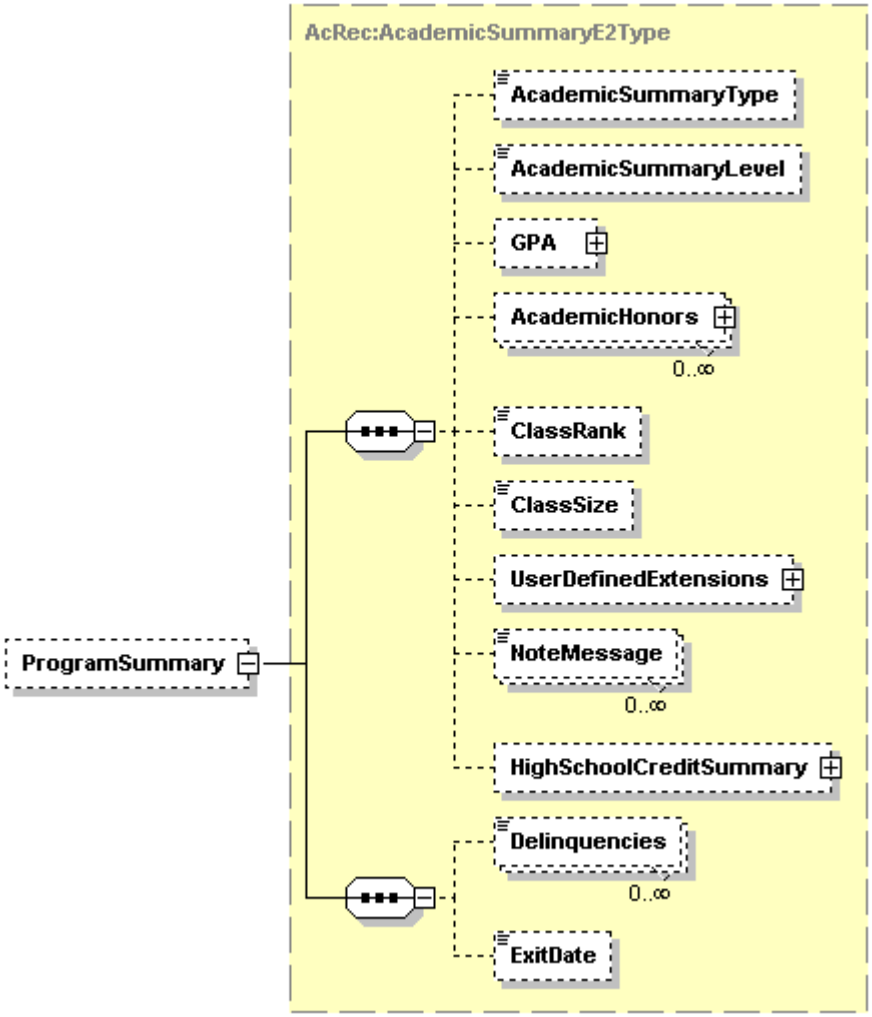

Tag Name	Schema Use	Description	Recommended Use	Format
AcademicSummaryType	Optional	Summary Type is an indication of what is being summarized over which period of time. *All* – Summary of all courses regardless of institution *SenderOnly* – Summary of all courses at sending institution (or recorded as if they were taken at the sending institution) *TransferOnly* – Summary of transfer work (courses taken at other than the sending institution) *AllNotRepeated* – Summary of all courses except for repeated or forgiven courses/credits *SenderNotRepeated* – Summary of all courses at sending institution except repeated or forgiven courses/credits	Optional	minOcc 0 maxOcc 1 **Enumerations:** All SenderOnly TransferOnly AllNotRepeated SenderNotRepeated TransferNotRepeated AcademicRenewal CarryoverCredit DegreeApplicable NonDegreeApplicable ConvertedFrom ConvertedTo Weighted NonWeighted UserDefined Cumulative

Tag Name	Schema Use	Description	Recommended Use	Format
		TransferNotRepeated – Summary of transfer work except for repeated or forgiven courses/credits *AcademicRenewal* – Subset of forgiven courses if the postsecondary school has a policy that allows for portion of the academic record to be excluded from the total credits used to compute the grade point average and to also be excluded from the credits earned toward the diploma. *CarryoverCredit* – Summary from offline records and used as the intitial point for cumulatives and averages *DegreeApplicable* – Summary of courses that apply to the award *NonDegreeApplicable* – Summary of courses that do not apply toward thedegree *ConvertedFrom* – Summary of credits before an institutional term-basis conversion, such as from quarter credits to semester credits *ConvertedTo* – Summary of credits after an institutional term-basis conversion, such as from quarter credits to semester credits *Weighted* – Summary that gives additional (higher) value to specific courses taken by a student, such as honors courses, International Baccalaureate, Advanced Placement, high school /college dual enrollment. *NonWeighted* – Summary that does not give additional value to courses, regardless of special characteristics of the courses. For example, if the grading scale is from 0 to 4.00, then it is not possible to have a non-weighted summary higher than 4.00. *UserDefined* – Use NoteMessage for explanation *Cumulative* – Summary of all credits taken by the student up to this point in time. This would typically be used for summaries at the end of each session.		
Comment: *Since this part of the schema deals only with the academic awards earned, the only recommended value would probably be "DegreeApplicable".*				
AcademicSummaryLevel	Optional	The level of credit associated with the credit hours earned that apply to this award. *Dual* – Dual level (upper division and graduate- may be applicable to a bachelor's degree or graduate degree or both) *DualGraduateUndergraduate – Same as above* *DualHighSchoolCollege – May be*	Not Recommended	minOcc 0 maxOcc 1 **Enumerations:** Dual DualGraduateUndergraduate DualHighSchoolCollege Graduate GraduateProfessional LowerDivision Professional Secondary

Tag Name	Schema Use	Description	Recommended Use	Format
		applicable for a high school diploma as well as postsecondary credit *Graduate* – Graduate level credit *GraduateProfessional* – Dual level (graduate and professional- may be applicable to both) *LowerDivision* – Lower division credit (associated with first/second year) *Professional* – Professional *Secondary – Secondary school credit only* *TechnicalPreparatory* – Tech Prep credit *Undergraduate* – Undergraduate *UpperDivision* – Higher or upper division credit (associated with third or fourth year) *Vocational* – Vocational/technical credit		TechnicalPreparatory Undergraduate UpperDivision Vocational
GPA	Optional	GPA for the Award Program	Optional	minOcc 0 maxOcc 1
Comment: *This complex data element will be expanded on page 101 which follows. However, it would not typically be included on a College Transcript.*				
AcademicHonors	Optional	Honors for the Award Program	Recommended	minOcc 0 maxOcc ∞
Comment: *This complex data element will be expanded on page 104 which follows.*				
ClassRank	Optional	The student's class rank relative to other students in their academic cohort (e.g. class).	Not Recommended	minOcc 0 maxOcc 1 minInclusive 1 maxInclusive 9999 totalDigits 4
Comment: *The student ranking the highest in the class would have a rank of "1". However, this is rarely found on a postsecondary transcript.*				
ClassSize	Optional	The numeric size of the academic cohort (e.g. class).	Not Recommended	minOcc 0 maxOcc 1 minInclusive 1 maxInclusive 9999 totalDigits 4
Comment: *This is rarely found on a postsecondary transcript.*				
UserDefinedExtensions	Optional	A mini schema to provide additional formatted information about the program summary	Optional	minOcc 0 maxOcc 1
Comment: *This mini schema would be agreed to, prior to transmission of the student transcript, by a selected group of trading partners. These trading partners would typically be from the same state or region, or schools that use the same vendor. All schools not in the selected group of trading partners would just ignore the contents of the mini schema.*				
NoteMessage	Optional Repeatable	Additional information about the Program Summary	Not Recommended	minOcc 0 maxOcc ∞ minLength 1 maxLength 80
HighSchoolCreditSummary	Optional	A summary of credits required, earned and deficient for a high school student	Not Recommended	minOcc 0 maxOcc 1
Comment: *This complex data element would not be included on a High School Transcript.*				

Tag Name	Schema Use	Description	Recommended Use	Format
Delinquencies	Optional Repeatable	The academic standing of the student upon transfer to the institution. *ExclusionAcademic* – Typically, the student had previously been on Suspension for low GPA and now is excluded from future enrollment at the school due to the student's academic record *ExclusionDiscipline* – Typically, the student had previously been on Suspension for disciplinary reasons and now is excluded from future enrollment at the school due to the student's disciplinary record *GoodStanding* - Student was in good standing *ProbationGPA* - Student was on academic probation (because of low GPA) *ProbationHours* - Student was on academic probation (deficiency in credit hours) *SuspensionGPA* - Student was on academic suspension (because of low GPA) *SuspensionHours* - Student was on academic suspension (deficiency in credit hours) *ProbationDiscipline* - Student was on disciplinary probation *SuspensionDiscipline* - Student was on disciplinary suspension *Unknown* *Other*	Not Recommended	minOcc 0 maxOcc ∞ **Enumerations:** ExclusionAcademic ExclusionDiscipline GoodStanding ProbationGPA ProbationHours SuspensionGPA SuspensionHours ProbationDiscipline SuspensionDiscipline Unknown Other
Comment: *This would normally not be an appropriate place in the schema to send this information.*				
ExitDate	Optional	The date on which the student officially withdrew or graduated.	Not Recommended	minOcc 0 maxOcc 1 xs:date
Comment: *The format for the date is ccyy-mm-dd. This would not be the appropriate place in the schema to transmit these data.*				
Comment: *This section of the transcript refers to a summary of the academic record for the specific academic program the student took that was used for the academic award specified. This is not normally included in a postsecondary transcript.*				

Student.AcademicRecord.AcademicAward.AcademicAwardProgram. ProgramSummary (Continued)

Code illustration:

```
<ProgramSummary>
    <AcademicSummaryType>All</AcademicSummaryType>
    <AcademicSummaryLevel>Undergraduate</AcademicSummaryLevel>
    <GPA>

    </GPA>
    <AcademicHonors>

    </AcademicHonors>
    <ClassRank/>
    <ClassSize/>
    <UserDefinedExtensions/>
    <NoteMessage/>
    <HighSchoolCreditSummary/>
    <Delinquencies/>
    <ExitDate/>
</ProgramSummary>
```

Student.AcademicRecord.AcademicAward.AcademicAwardProgram. ProgramSummary.GPA

Note: This computation of the student's GPA for a specific program within a specific award would not typically be found on a College Transcript.

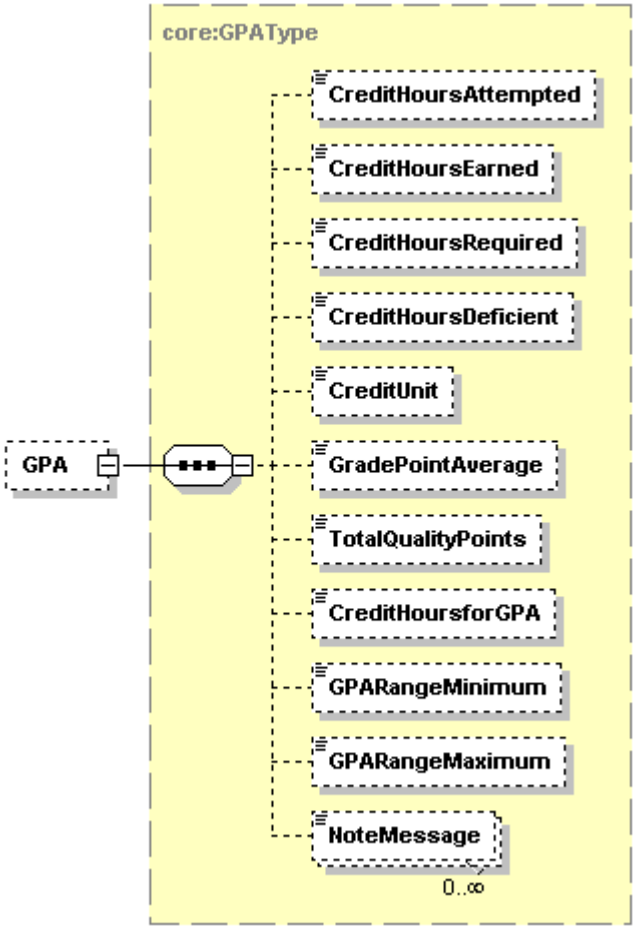

Tag Name	Schema Use	Description	Recommended Use	Format
CreditHoursAttempted	Optional	The total value of credit hours attempted whether or not included in the hours for GPA or hours earned.	Recommended	minOcc 0 maxOcc 1 xs:decimal
Comment: *This would also include the credit value of a course from which the student withdrew, if it appears on the transcript. So if a student had enrolled in 10 semester credits which are all included in the specified program and appear on the transcript, and had passed 5 credits and withdrawn from 5 credits, then the value of this field would be "10". If the student had enrolled for 10.5 credits that are included in this program and are on the transcript, then the value of this field would be "10.5".*				
CreditHoursEarned	Optional	The total value of credit hours successfully completed or earned.	Recommended	minOcc 0 maxOcc 1 xs:decimal
Comment: *If the student had earned 5 semester credits and they all counted toward this program for this award, then the value of this data element would be "5". If only 4.5 credits were earned, then the value would be "4.5".*				
CreditHoursRequired	Optional	The total number of credit hours needed to earn a postsecondary award	Not Recommended	minOcc 0 maxOcc 1 xs:decimal

Tag Name	Schema Use	Description	Recommended Use	Format
Comment: *This would not normally appear on a postsecondary transcript. It would typically be a part of the student's degree audit.*				
CreditHoursDeficient	Optional	The total number of credit hours lacking for the student qualify for a postsecondary award	Not Recommended	minOcc 0 maxOcc 1 xs:decimal
Comment: *This would not normally appear on a postsecondary transcript. It would typically be a part of the student's degree audit.*				
CreditUnit	Optional	The type of credit (unit, semester, or quarter) associated with the credit hours earned for the course.	Recommended	minOcc 0 maxOcc 1 **Enumerations:** NoCredit Quarter Semester Units ClockHours CarnegieUnits ContinuingEducationUnits Unreported Other
Comment: *In version 1.0.0 of the schema, there were several errors introduced in the enumerated values of CourseCreditUnits. They incorrectly were introduced into the schema with a trailing space. In this version, new values have been added without the trailing spaces. The values with the incorrect trailing spaces have been deprecated and will be deleted in a future release of the schema.*				
GradePointAverage	Optional	The value of the total quality points divided by the Credit Hours for Grade Point Average.	Recommended	minOcc 0 maxOcc 1 xs:decimal
Comment: *For example, if the student had enrolled for 10 semester credits that counted toward this award and this program, passed 8 credits with grades of B worth 3 grade points for each credit, and 2 credits with grades of F worth 0 grade points, then the calculation would be 24 grade points divided by 10 or a GPA of "2.4" or "2.40" or "2.400" depending on the policy of the sending school.*				
TotalQualityPoints	Optional	The total value of quality points used for the calculation of the Grade Point Average.	Recommended	minOcc 0 maxOcc 1 xs:decimal
Comment: *If a student earned all grades of B (worth 3 grade points for each credit) in 8.5 credits that count toward this award and this program, then the value of this data element would be "25.5".*				
CreditHoursforGPA	Optional	The total value of credit hours used to calculate the Grade Point Average.	Recommended	minOcc 0 maxOcc 1 xs:decimal
Comment: *If a student earned grades of A (worth 4 grades points per credit) in 3 credits in this program for this award; grades of F (worth 0 points per unit) in 4 credits; and withdrew from 5 credits, then the total credit hours for GPA for this award and this program would be "7".*				
GPARangeMinimum	Optional	The minimum possible GPA	Recommended	minOcc 0 maxOcc 1 xs:decimal
Comment: *If the lowest possible grade is an F and a grade of F is valued at 0 grade points, then this value would be "0", or "0.0" or "0.00".*				
GPARangeMaximum	Optional	The maximum possible GPA	Recommended	minOcc 0 maxOcc 1 xs:decimal
Comment: *If the highest possible grade is an A and a grade of A is valued at 4 grade points, then this value would be "4" or "4.0" or "4.00", etc.*				
NoteMessage	Optional Repeatable	Additional information about the GPA	Not Recommended	minOcc 0 maxOcc ∞ minLength 1 maxLength 80
Comment: *A student's GPA for a specific program within the Award or Diploma would not normally be included in a transcript so this*				

Tag Name	Schema Use	Description	Recommended Use	Format
entire section of the schema would not normally be included.				

Code illustration:

```
<GPA>
    <CreditHoursAttempted>12</CreditHoursAttempted>
    <CreditHoursEarned>12</CreditHoursEarned>
    <CreditHoursRequired/>
    <CreditHoursDeficient/>
    <CreditUnit>Semester</CreditUnit>
    <GradePointAverage>3.75</GradePointAverage>
    <TotalQualityPoints>45</TotalQualityPoints>
    <CreditHoursforGPA>12</CreditHoursforGPA>
    <GPARangeMinimum>0</GPARangeMinimum>
    <GPARangeMaximum>4</GPARangeMaximum>
    <NoteMessage/>
</GPA>
```

Student.AcademicRecord.AcademicAward.AcademicAwardProgram. ProgramSummary.AcademicHonors

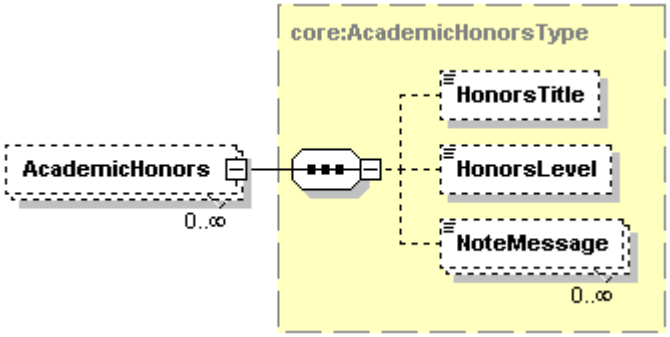

Tag Name	Schema Use	Description	Recommended Use	Format
HonorsTitle	Optional	The descriptive title for the honors received.	Not Recommended	minOcc 0 maxOcc 1 minLength 1 maxLength 30
HonorsLevel	Optional	A code value representing 1st highest honor, 2nd highest and 3rd highest.	Not Recommended	minOcc 0 maxOcc 1 **Enumerations:** FirstHighest SecondHighest ThirdHighest
NoteMessage	Optional Repeatable	Additional information about the Academic Honors	Not Recommended	minOcc 0 maxOcc 1 minLength 1 maxLength 80
Comment: *This entire section of the schema for honors awarded for a specific program as part of an award would not normally be included on a postsecondary transcript.*				

Code illustration:

```
<AcademicHonors>
    <HonorsTitle>Cum Laude</HonorsTitle>
    <HonorsLevel>ThirdHighest</HonorsLevel>
    <NoteMessage/>
</AcademicHonors>
```

Student.AcademicRecord.AcademicAward. AcademicDegreeRequirement

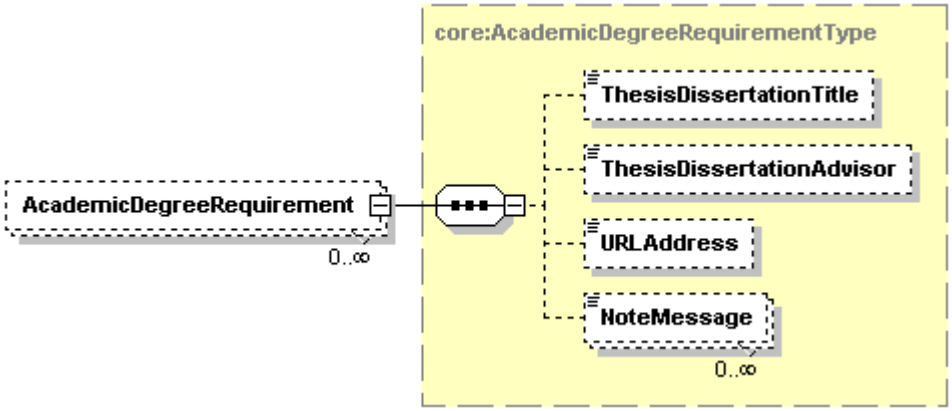

Tag Name	Schema Use	Description	Recommended Use	Format
ThesisDissertationTitle	Optional	The title of the thesis or dissertation.	Recommended	minOcc 0 maxOcc 1 minLength 1 maxLength
ThesisDissertationAdvisor	Optional	The advisor (Major Professor) who supervised the Thesis or Dissertation on behalf of the student earning the degree.	Optional	minOcc 0 maxOcc 1 minLength 1 maxLength 45
URLAddress	Optional	The Internet web address where a copy of the thesis or dissertation may be obtained	Recommended	minOcc 0 maxOcc 1 minLength 0 maxLength 512
NoteMessage	Optional Repeatable	Additional information about the Academic Degree Requirement	Not Recommended	minOcc 0 maxOcc ∞ minLength 1 maxLength 80

Code illustration:

```
<AcademicDegreeRequirement>
    <ThesisDissertationTitle>A Study of the Mating Habits of Manatees in South Florida</ThesisDissertationTitle>
    <ThesisDissertationAdvisor>Dr. John Huckster</ThesisDissertationAdvisor>
    <URLAddress>http://.www.DissertationBiologyHuckster.edu</URLAddress>
    <NoteMessage/>
</AcademicDegreeRequirement>
```

Student.AcademicRecord.AcademicAward.AcademicSummary

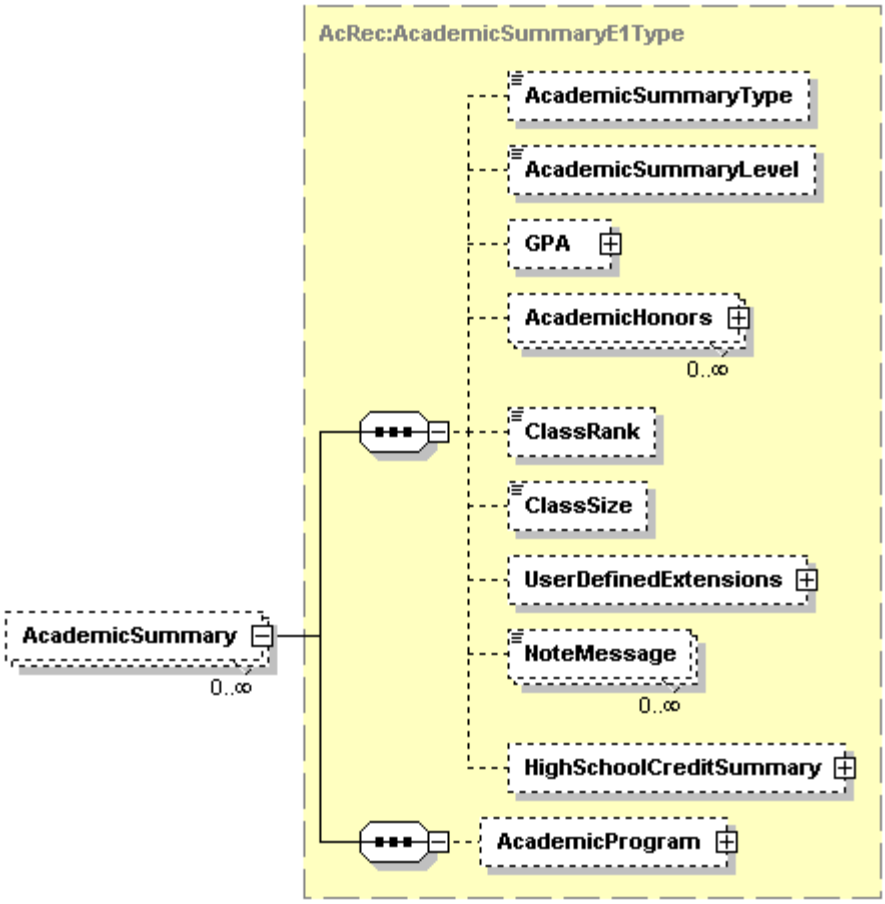

Tag Name	Schema Use	Description	Recommended Use	Format
AcademicSummaryType	Optional	Summary Type is an indication of what is being summarized over what period of time *All* - Summary of all courses regardless of institution *SenderOnly* - Summary of all courses at sending institution (or recorded as if they were taken at the sending institution) *TransferOnly* - Summary of transfer work (courses taken at other than the sending institution) *AllNotRepeated* - Summary of all courses except for repeated or forgiven courses/credits *SenderNotRepeated* - Summary of all courses at sending institution except for repeated or forgiven courses/credits *TransferNotRepeated* - Summary of transfer work except for repeated or forgiven courses/credits *AcademicRenewal* - Subset of forgiven courses *CarryoverCredit* - Summary from	Recommended	minOcc 0 maxOcc 1 **Enumerations:** All SenderOnly TransferOnly AllNotRepeated SenderNotRepeated TransferNotRepeated AcademicRenewal CarryoverCredit DegreeApplicable NonDegreeApplicable ConvertedFrom ConvertedTo UserDefined Weighted NonWeighted Cumulative

Tag Name	Schema Use	Description	Recommended Use	Format
		offline records and used as the intitial point for cumulatives and averages *DegreeApplicable* - Summary of course that apply to degree *NonDegreeApplicable* - Summary of courses that do not apply toward degree *ConvertedFrom* - Summary of credits before an institutional term-basis conversion, such as from quarters to semesters *ConvertedTo* - Summary of credits after an institutional term-basis conversion, such as from quarters to semesters *Weighted* – Summary that gives additional (higher) value to specific courses taken by a student, such as honors courses, International Baccalaureate, Advanced Placement, high school/college dual enrollment. *NonWeighted* – Summary that does not give additional value to courses, regardless of special characteristics of the courses. For example, if the grading scale is from 0 to 4.00, then it is not possible to have a summary higher than 4.00. *UserDefined* - see NoteMessage for explanation *Cumulative* – This is the academic summary of all courses taken up to a specific point in time. This would typically only be included with summaries in an academic session.		
AcademicSummaryLevel	Optional	The level of credit associated with the credit hours earned as part of this award.	Recommended	minOcc 0 maxOcc 1 **Enumerations:** Undergraduate LowerDivision UpperDivision Vocational TechnicalPreparatory Graduate Professional Dual DualHighSchoolCollege DualGraduateUndergraduate GraduateProfessional
GPA	Optional	Grade Point Average for the Academic Award	Recommended	minOcc 0 maxOcc 1
Comment: *This complex data element will be expanded on page 109 which follows.*				
AcademicHonors	Optional Repeatable	Honors for the Academic Award	Recommended	minOcc 0 maxOcc ∞
Comment: *This complex data element will be expanded on page 112 which follows.*				
ClassRank	Optional	The student's class rank relative to	Not	minOcc 0 maxOcc 1

Tag Name	Schema Use	Description	Recommended Use	Format
		other students in their academic cohort (e.g. class).	Recommended	minInclusive 1 maxInclusive 9999 totalDigits 4
Comment: *It would be highly unusual to see class ranking and class size on a College Transcript.*				
ClassSize	Optional	The numeric size of the academic cohort (e.g. class).	Not Recommended	minOcc 0 maxOcc 1 minInclusive 1 maxInclusive 9999 totalDigits 4
Comment: *It would be highly unusual to see class ranking and class size on a College Transcript.*				
UserDefinedExtensions	Optional	This is a mini schema containing formatted data used with an agreed upon mini schema by a specified set of trading partners. These partners are typically in the same state or region or use the same vendor.	Optional	minOcc 0 maxOcc 1
NoteMessage	Optional Repeatable	Additional information about the Academic Summary	Not Recommended	minOcc 0 maxOcc ∞ minLength 1 maxLength 80
HighSchoolCreditSummary	Optional	A summary of high school credits by curricular area.	Not Recommended	minOcc 0 maxOcc 1
Comment: *This complex data element is useful and important on a high school transcript, but would not be used on the College Transcript.*				
AcademicProgram	Optional	Academic Program(s) related to this Academic Summary	Not Recommended	minOcc 0 maxOcc ∞
Comment: *This complex data element would not normally be used at this point in the schema, to give detailed data about the academic program in which an award was earned. This complex data element will be expanded on page 113 which follows.*				
Comment: *While academic award programs and summaries can be communicated in several different elements, it is recommended that they be reported at the highest appropriate level. E.G., use AcademicAward.AcademicAwardProgram to indicate degree major; AcademicAward.AcademicAwardProgram.ProgramSummary for degree major GPA and honors; AcademicAward.AcademicSummary for degree GPA and honors. This would be the appropriate place in this schema to give information about the credits and GPA for the diploma that is awarded if the sending school does not include this in the academic session in which the diploma was awarded.*				

Code illustration:

```
<AcademicSummary>
    <AcademicSummaryType>All</AcademicSummaryType>
    <AcademicSummaryLevel>Undergraduate</AcademicSummaryLevel>
    <GPA>

    </GPA>
    <AcademicHonors>

    </AcademicHonors>
    <ClassRank/>
    <ClassSize/>
    <UserDefinedExtensions/>
    <NoteMessage/>
    <HighSchoolCreditSummary/>
    <AcademicProgram>

    </AcademicProgram>
</AcademicSummary>
```

Student.AcademicRecord.AcademicAward.AcademicSummary.GPA

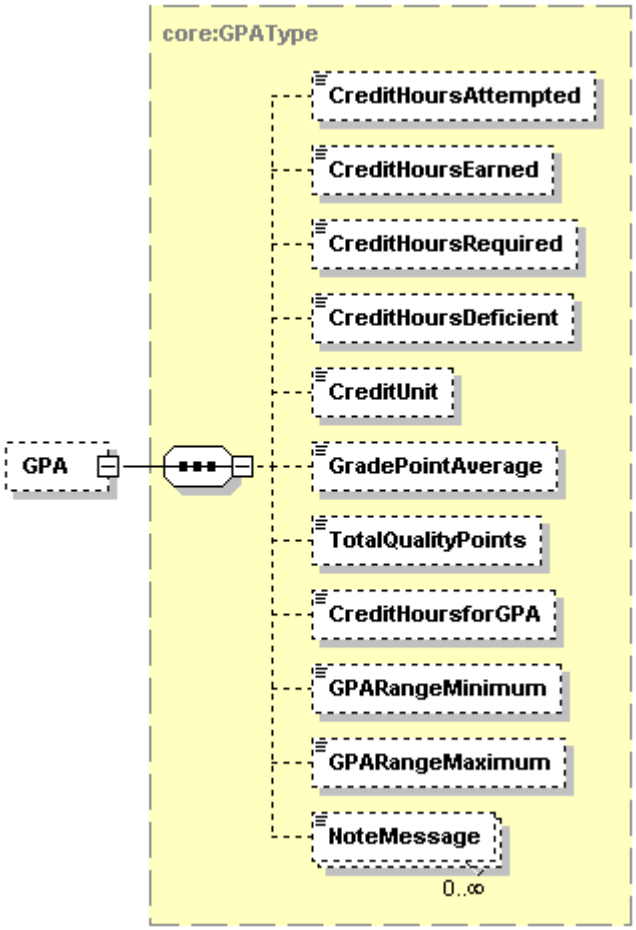

Tag Name	Schema Use	Description	Recommended Use	Format
CreditHoursAttempted	Optional	The total value of credit hours attempted whether or not included in the hours for GPA or hours earned.	Recommended	minOcc 0 maxOcc 1 xs:decimal
Comment: *This would include the credit value of a course from which the student withdrew, if it appears on the transcript. So if a student had enrolled in 10 Carnegie Units which are all included for this diploma and are on the transcript, and had passed 5 units and withdrawn from 5 units, then the value of this field would be "10". If the student had enrolled for 10.5 units that are included for this diploma and are on the transcript, then the value of this field would be "10.5".*				
CreditHoursEarned	Optional	The total value of credit hours successfully completed or earned.	Recommended	minOcc 0 maxOcc 1 xs:decimal
Comment: *If the student had earned 5 Carnegie Units and they all counted toward this diploma, then the value of this data element would be "5". If only 4.5 units were earned, then the value would be "4.5".*				
CreditHoursRequired	Optional	The total number of credit hours required to complete the requirements for an academic award.	Not Recommended	minOcc 0 maxOcc 1 xs:Decimal
Comment: *This data element would not normally be included in a College Transcript. It would be included in a Degree Audit document.*				
CreditHoursDeficient	Optional	The total number of credit hours the student still needs to complete the requirements for the academic award.	Not Recommended	minOcc 0 maxOcc 1 xs:decimal

Tag Name	Schema Use	Description	Recommended Use	Format
Comment: *This data element would not normally be included in a College Transcript. It would be included in a Degree Audit document.*				
CreditUnit	Optional	The type of credit (unit, semester, or quarter) associated with the credit hours earned for the course.	Recommended	minOcc 0 maxOcc 1 **Enumerations:** NoCredit Quarter Semester Units ClockHours CarnegieUnits ContinuingEducationUnits Unreported Other
Comment: *In version 1.0.0 of the schema, there were several errors introduced in the enumerated values of CourseCreditUnits. They incorrectly were introduced into the schema with a trailing space. In this version, new values have been added without the trailing spaces. The values with the incorrect trailing spaces have been deprecated and will be deleted in a future release of the schema. Note that the credit unit is not necessarily directly related to the type of session in which a course is offered. A full year course, or a semester course, or a quarter course, may all offer semester or quarter credits as the credit unit.*				
GradePointAverage	Optional	The value of the total quality points divided by the Credit Hours for Grade Point Average.	Recommended	minOcc 0 maxOcc 1 xs:decimal
Comment: *For example, if the student had enrolled for 10 semester credits that counted toward this award, passed 8 credits with grades of B worth 3 grade points for each semester credit and 2 semester credits with grades of F worth 0 grade points, then the calculation would be 24 grade points divided by 10 or a GPA of "2.4" or "2.40" or "2.400" depending on the policy of the sending school.*				
TotalQualityPoints	Optional	The total value of quality points used for the calculation of the Grade Point Average.	Recommended	minOcc 0 maxOcc 1 xs:decimal
Comment: *If a student earned all grades of B (worth 3 grade points for each semester credit) in 8.5 semester credits that count toward this award, then the value of this data element would be "25.5".*				
CreditHoursforGPA	Optional	The total value of credit hours used to calculate the Grade Point Average.	Recommended	minOcc 0 maxOcc 1 xs:decimal
Comment: *If a student earned grades of A (worth 4 grades points per unit) in 3 semester credits for this award; grades of F (worth 0 points per unit) in 4 credits; and withdrew without penalty from 5 credits, then the total credit hours for GPA for this award would be "7".*				
GPARangeMinimum	Optional	The minimum possible Grade Point Average	Recommended	minOcc 0 maxOcc 1 xs:decimal
Comment: *If the lowest possible grade is an F and a grade of F is valued at 0 grade points, then this value would be "0", or "0.0" or "0.00", etc.*				
GPARangeMaximum	Optional	The maximum possible Grade Point Average	Recommended	minOcc 0 maxOcc 1 xs:decimal
Comment: *If the highest possible grade is an A and a grade of A is valued at 4 grade points, then this value would be "4" or "4.0" or "4.00", etc.*				
NoteMessage	Optional Repeatable	Additional information about the GPA	Not Recommended	minOcc 0 maxOcc ∞ minLength 1 maxLength 80
Comment: *The GPA reported in this section of the Schema is an overall GPA for all courses that count toward the award described in this section.*				

Student.AcademicRecord.AcademicAward.AcademicSummary.GPA (Continued)

Code illustration:

```
<GPA>
    <CreditHoursAttempted>159</CreditHoursAttempted>
    <CreditHoursEarned>136</CreditHoursEarned>
    <CreditHoursRequired/>
    <CreditHoursDeficient/>
    <CreditUnit>Semester</CreditUnit>
    <GradePointAverage>3.0915</GradePointAverage>
    <TotalQualityPoints>473</TotalQualityPoints>
    <CreditHoursforGPA>153</CreditHoursforGPA>
    <GPARangeMinimum>0</GPARangeMinimum>
    <GPARangeMaximum>4</GPARangeMaximum>
    <NoteMessage/>
</GPA>
```

Student.AcademicRecord.AcademicAward.AcademicSummary. AcademicHonors

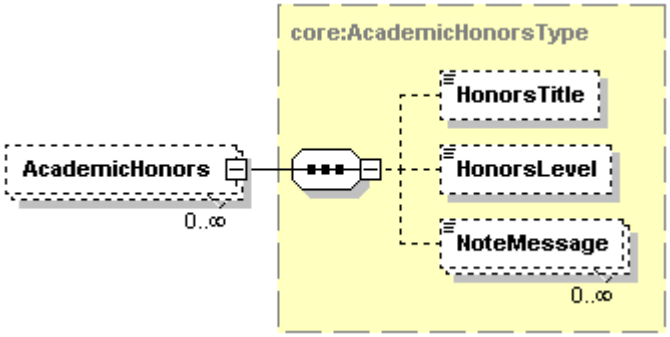

Tag Name	Schema Use	Description	Recommended Use	Format
HonorsTitle	Optional	The descriptive title for the honors received.	Recommended	minOcc 0 maxOcc 1 minLength 1 maxLength 30
Comment: *There is a great variety of titles for honors that are associated with the diploma being awarded. Among these are "Star Student", "Sigma Alpha Tau", "Salutatorian", "Valedictorian", "Summa Cum Laude", Magna Cum Laude", "Cum Laude", "With Highest Honors", etc.*				
HonorsLevel	Optional	A code value representing 1st highest honor, 2nd highest and 3rd highest.	Recommended	minOcc 0 maxOcc 1 **Enumerations:** FirstHighest SecondHighest ThirdHighest
NoteMessage	Optional Repeatable	Additional information about the Academic Honors	Not Recommended	minOcc 0 maxOcc ∞ minLength 1 maxLength 80
Comment: *These are the academic honors associated with the award described immediately above.*				

Code illustration:

```
<AcademicHonors>
    <HonorsTitle>Valedictorian</HonorsTitle>
    <HonorsLevel>FirstHighest</HonorsLevel>
    <NoteMessage/>
</AcademicHonors>
```

Student.AcademicRecord.AcademicAward.AcademicSummary. AcademicProgram

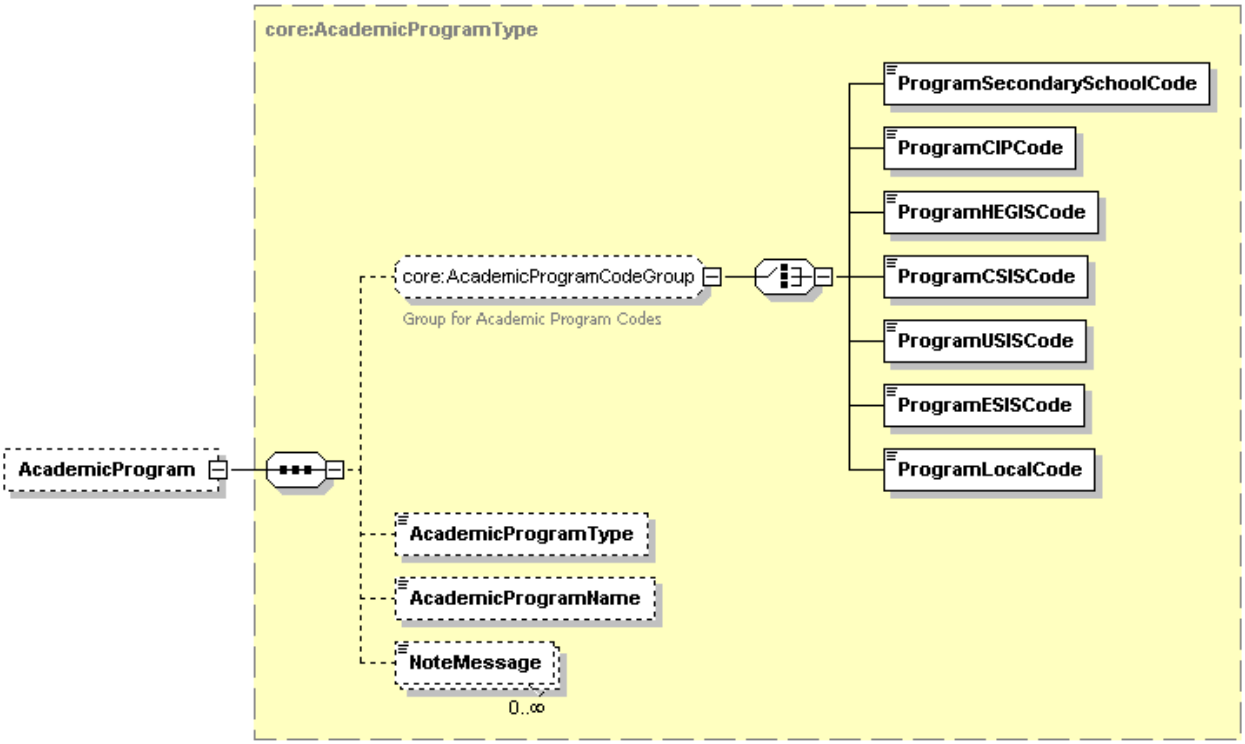

Tag Name	Schema Use	Description	Recommended Use	Format
ProgramSecondarySchoolCode	Optional exclusive choice	Code indicating the type of program being followed in high school.	Not Recommended	minOcc 0 maxOcc 1 **Enumerations:** CareerPrep CollegePrep CollegePrepOrCollegeTechPrep CollegeTechPrep General Occupational Vocational
Comment: *This code set would not be appropriate to describe a program for a postsecondary student.*				
ProgramCIPCode	Optional exclusive choice	Code indicating a discipline or field of study assigned by the US Department of Education National Center for Education Statistics' Classification of Instructional Programs	Recommended choice	minOcc 0 maxOcc 1 minLength 5 maxLength 7
Comment: *The format of the CIP code is either nn.nnnn or nn.nn*				
ProgramHEGISCode	Optional exclusive choice	Code indicating a discipline or field of study assigned by Higher Education General Information Survey	Recommended choice	minOcc 0 maxOcc 1 minLength 6 maxLength 20
ProgramCSISCode	Optional exclusive choice	Code indicating a discipline or field of study assigned by Statistics Canada Canadian College Student Information System	Optional choice	minOcc 0 maxOcc 1 minLength 5 maxLength 5

Tag Name	Schema Use	Description	Recommended Use	Format
ProgramUSISCode	Optional exclusive choice	Code indicating a discipline or field of study assigned by the Statistics Canada University Student Information System.	Optional choice	minOcc 0 maxOcc 1 minLength 5 maxLength 5
ProgramESISCode	Optional exclusive choice	Code indicating a discipline or field of study assigned by the Statistics Canada Enhanced Student Information System.	Optional choice	minOcc 0 maxOcc 1 minLength 1 maxLength 20
Comment: *Although the immediately above 3 choices for program codes are optional, they would only be used to describe programs at postsecondary schools in Canada.*				
ProgramLocalCode	Optional exclusive choice	This code set is designed to be used for only one school and would not be an appropriate code set for a College Transcript..	Not Recommended	minOcc 0 maxOcc 1 minLength 1 maxLength 20
Comment: *This code set would be appropriate to provide a student applying for admission to your school, but not for a College Transcript.*				
AcademicProgramType	Optional	The type of academic program which a postsecondary student is pursuing.	Optional	minOcc 0 maxOcc 1 **Enumerations:** Concentration Major Minor Specialization
AcademicProgramName	Optional	Literal name of program, major, or field of study.	Recommended	minOcc 0 maxOcc 1 minLength 1 maxLength 60
NoteMessage	Optional Repeatable	Additional information about the Academic Program	Not Recommended	minOcc 0 maxOcc ∞ minLength 1 maxLength 80

Code illustration:

```
<AcademicProgram>
    <ProgramCIPCode>45.1002</ProgramCIPCode>
    <AcademicProgramType>Major</AcademicProgramType>
    <AcademicProgramName>Government</AcademicProgramName>
    <NoteMessage/>
</AcademicProgram>
```

Student.AcademicRecord.AcademicSummary

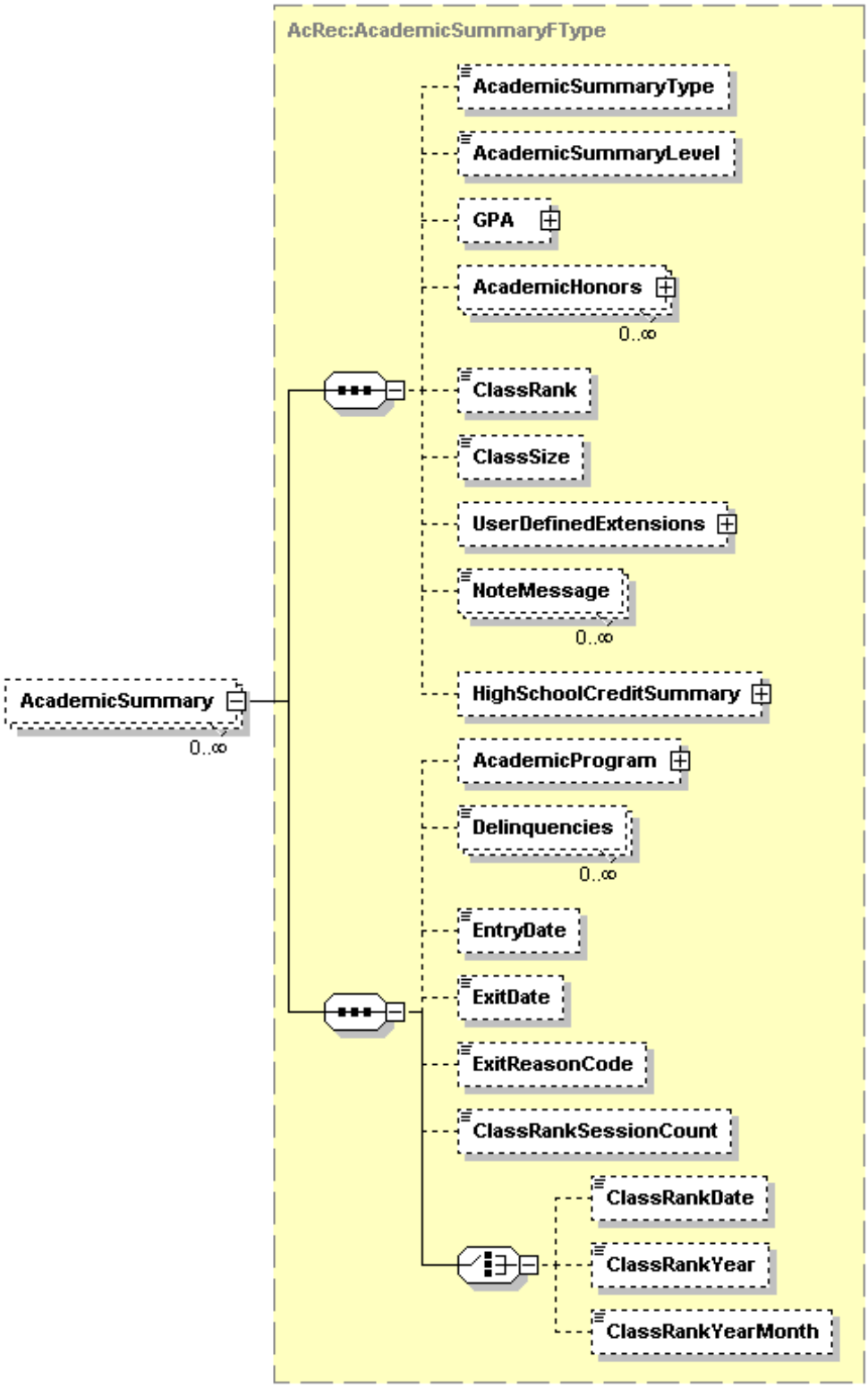

Student.AcademicRecord.AcademicSummary (Continued)

Tag Name	Schema Use	Description	Recommended Use	Format
AcademicSummaryType	Optional	Summary Type is an indication of what is being summarized over what period of time *All* - Summary of all courses regardless of institution *SenderOnly* - Summary of all courses at sending institution (or recorded as if they were taken at the sending institution) *TransferOnly* - Summary of transfer work (courses taken at other than the sending institution) *AllNotRepeated* - Summary of all courses except for repeated or forgiven courses/credits *SenderNotRepeated* - Summary of all courses at sending institution except for repeated or forgiven courses/credits *TransferNotRepeated* - Summary of transfer work except for repeated or forgiven courses/credits *AcademicRenewa*l - Subset of forgiven courses *CarryoverCredit* - Summary from offline records and used as the intitial point for cumulatives and averages *DegreeApplicable* - Summary of courses that apply to degree *NonDegreeApplicable* - Summary of courses that do not apply toward degree *ConvertedFrom* - Summary of credits before an institutional term-basis conversion, such as from quarters to semesters *ConvertedTo* - Summary of credits after an institutional term-basis conversion, such as from quarters to semesters *Weighted* – Summary that gives additional (higher) value to specific courses taken by a student, such as honors courses, International Baccalaureate, Advanced Placement, high school/college dual enrollment. *NonWeighted* – Summary that does not give additional value to courses, regardless of special characteristics of the courses. For example, if the grading scale is from 0 to 4.00, then it is not possible to have a summary higher than 4.00. *UserDefined* - Use NoteMessage for explanation *Cumulative* – Summary that gives cumulative totals up to a specified point in time. Used in conjunction with AcademicSession	Recommended	minOcc 0 maxOcc 1 **Enumerations:** All SenderOnly TransferOnly AllNotRepeated SenderNotRepeated TransferNotRepeated AcademicRenewal CarryoverCredit DegreeApplicable NonDegreeApplicable ConvertedFrom ConvertedTo UserDefined Weighted NonWeighted Cumulative

Tag Name	Schema Use	Description	Recommended Use	Format
AcademicSummaryLevel	Optional	The level of credit associated with the credit hours earned for courses.	Recommended	minOcc 0 maxOcc 1 **Enumerations:** Undergraduate LowerDivision UpperDivision Vocational TechnicalPreparatory Graduate Professional Dual DualUndergraduateGraduate GraduateProfessional
GPA	Optional	Grade Point Average for this Academic Summary	Recommended	minOcc 0 maxOcc 1
Comment: *This complex data element will be expanded on page 120 which follows.*				
AcademicHonors	Optional	Academic Honors for this Academic Summary	Optional	minOcc 0 maxOcc 1
Comment: *This complex data element will be expanded on page 123 which follows.*				
ClassRank	Optional	The student's class rank relative to other students in their academic cohort (e.g. class).	Not Recommended	minOcc 0 maxOcc 1 minInclusive 1 maxInclusive 9999 totalDigits 4
Comment: *The Workgroup that developed the PESC XML College Transcript Schema recommends that this is the most appropriate place in the Schema to include the student's overall rank in class, if it is to be included. The student ranking the highest in the class would have a rank of "1". Class rank is not typically included on a College Transcript.*				
ClassSize	Optional	The numeric size of the academic cohort (e.g. class).	Not Recommended	minOcc 0 maxOcc 1 minInclusive 1 maxInclusive 9999 totalDigits 4
Comment: *If there were 753 students in the student's class and they were ranked by the high school, then this value would be "753". Class size is not included on a typical college transcript.*				
UserDefinedExtensions	Optional	A mini schema that contains formatted data	Optional	minOcc 0 maxOcc 1
Comment: *The UserDefinedExtensions is designed for use between or among a previously agreed upon group of trading partners typically within a state or region, or among users of the same vendor. The structure of the mini schema was also previously agreed upon and can be ignored by those who are not in that group.*				
NoteMessage	Optional Repeatable	Additional information about the Academic Summary	Optional	minOcc 0 maxOcc ∞ minLength 1 maxLength 80
Comment: *Since NoteMessage is a text string, it cannot be automatically processed by the receiving school's computer, unless it is in a previously agreed upon format among a group of previously defined trading partners.*				
HighSchoolCreditSummary	Optional	Information about the number of credits by curriculum area on a high school transcript.	Not Recommended	minOcc 0 maxOcc 1
Comment: *This complex data element is intended for use in a High School Transcript and would not be included on a College Transcript.*				

Tag Name	Schema Use	Description	Recommended Use	Format
AcademicProgram	Optional	Academic Program (e.g., major) for this Academic Summary	Optional	minOcc 0 maxOcc 1
Comment: *This is the appropriate place to list the student's major or degree objective. This complex data element will be expanded on page 124 which follows.*				
Delinquencies	Optional Repeatable	The academic standing of the student in the institution. *ExclusionAcademic* – Student was typically previously suspended for academic reasons and is no longer eligible for continued enrollment or readmission *ExclusionDiscipline* – Student was typically previously suspended for disciplinary reasons and is no longer eligible for continued enrollment or readmission *GoodStanding* - Student was in good standing *ProbationGPA* - Student was on academic probation (because of low GPA) *ProbationHours* - Student was on academic probation (deficiency in credit hours) *SuspensionGPA* - Student was on academic suspension (because of low GPA) *SuspensionHours* - Student was on academic suspension (deficiency in credit hours) *ProbationDiscipline* - Student was on disciplinary probation *SuspensionDiscipline* - Student was on disciplinary suspension *Unknown* *Other*	Not Recommended	minOcc 0 maxOcc ∞ **Enumerations:** ExclusionAcademic ExclusionDiscipline GoodStanding ProbationGPA ProbationHours SuspensionGPA SuspensionHours ProbationDiscipline SuspensionDiscipline Unknown Other
Comment: *It is recommended that probation not be included on the transcript since there is no universally accepted definition of probation, and that other Delinquencies be included at the Session level.*				
EntryDate	Optional	The date on which the student officially began enrollment at this school	Optional	minOcc 0 maxOcc 1 xs:date
Comment: *It would be unusual to find this date on a College Transcript. The date format is ccyy-mm-dd.*				
ExitDate	Optional	The date on which the student officially withdrew or graduated	Optional	minOcc 0 maxOcc 1 xs:date
Comment: *This date would typically be the date of graduation for students who did graduate. If the student did not graduate, it would be the last date of known attendance unless the school has a policy on withdrawal from the school. It would be unusual to find this data element on a College Transcript. The date format is ccyy-mm-dd.*				
ExitReasonCode	Optional	The reason a high school student stopped attending a session	Not Recommended	minOcc 0 maxOcc 1
Comment: *This data element is useful for the high school transcript, but is not appropriate for the College Transcript.*				

Tag Name	Schema Use	Description	Recommended Use	Format
ClassRankSessionCount	Optional	The number of terms or sessions included when the class rank for a student was computed	Not Recommended	minOcc 0 maxOcc 1 minIncl 1 maxIncl 9999
Comment: *This data element would not typically be included on a College Transcript.*				
ClassRankDate	Optional Choice	The date when the ranking of students in the class was computed	Not Recommended	minOcc 0 maxOcc 1 xs:date with format ccyy-mm-dd
Comment: *Since class ranking is not typically included on a College Transcript, none of these three choices would typically be found on a College Transcript.*				
ClassRankYear	Optional Choice	The year when the ranking of students in the class was computed	Optional	minOcc 0 maxOcc 1 g:Year with format ccyy
Comment: *Since class ranking is not typically included on a College Transcript, none of these three choices would typically be found on a College Transcript.*				
ClassRankYearMonth	Optional Choice	The year and month when the ranking of students in the class was computed	Optional	minOcc 0 maxOcc 1 g:YearMonth with format ccyy-mm
Comment: *Since class ranking is not typically included on a College Transcript, none of these three above choices would typically be found on a College Transcript.*				
Comment: *This portion of the XML College Transcript is the place for the overall summary of the student's entire academic record.*				

Student.AcademicRecord.AcademicSummary (Continued)

Code illustration:

```
<AcademicSummary>
    <AcademicSummaryType>All</AcademicSummaryType>
    <AcademicSummaryLevel>Undergraduate</AcademicSummaryLevel>
    <GPA>

    </GPA>
    <AcademicHonors>

    </AcademicHonors>
    <ClassRank/>
    <ClassSize/>
    <UserDefinedExtensions/>
    <NoteMessage/>
    <HighSchoolCreditSummary/>
    <AcademicProgram>

    </AcademicProgram>
    <Delinquencies/>
    <EntryDate/>
    <ExitDate/>
    <ExitReasonCode/>
    <ClassRankSessionCount/>
    <ClassRankDate/>
</AcademicSummary>
```

Student.AcademicRecord.AcademicSummary.GPA

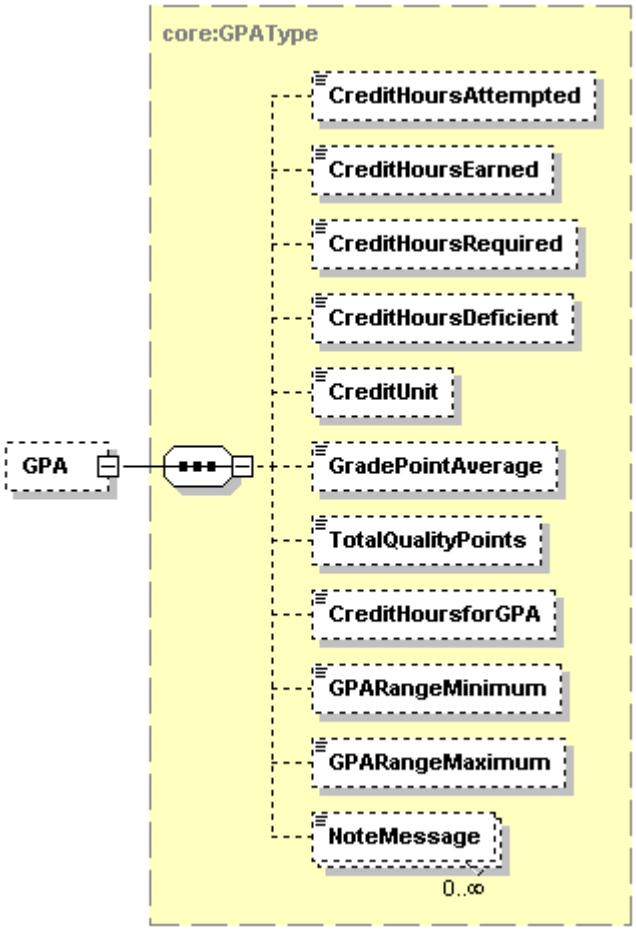

Tag Name	Schema Use	Description	Recommended Use	Format
CreditHoursAttempted	Optional	The total value of credit hours attempted whether or not included in the hours for GPA or hours earned	Recommended	minOcc 0 maxOcc 1 xs:decimal
Comment: *This would also include the credit value of a course from which the student withdrew, if it appears on the transcript. So if a student had enrolled in 10 semester credits which are all included in the specified program and appear on the transcript, and had passed five credits and withdrawn from 5 credits, then the value of this field would be "10". If the student had enrolled for 10.5 credits that were included on the transcript, then the value of this field would be "10.5".*				
CreditHoursEarned	Optional	The total value of credit hours successfully completed or earned	Recommended	minOcc 0 maxOcc 1 xs:decimal
Comment: *If the student had earned 5 semester credits and they all were included on the transcript, then the value of this data element would be "5". If only 4.5 credits were earned, then the value would be "4.5".*				
CreditHoursRequired	Optional	The total value of credit hours required for an award	Not Recommended	minOcc 0 maxOcc 1 xs:decimal
Comment: *This data element would not be used on a College Transcript. It would typically be available on a college student's degree audit report.*				

Tag Name	Schema Use	Description	Recommended Use	Format
CreditHoursDeficient	Optional	The total value of credit hours that are still needed by the student to earn an award.	Not Recommended	minOcc 0 maxOcc 1 xs:decimal
Comment: *This data element would not be used on a College Transcript. It would typically be available on a college student's degree audit report.*				
CreditUnit	Optional	The type of credit (unit, semester, or quarter) associated with the credit hours earned for a course	Recommended	minOcc 0 maxOcc 1 **Enumerations:** NoCredit Quarter Semester Units ClockHours CarnegieUnits ContinuingEducationUnits Unreported Other
Comment: *Note that the credit unit is not necessarily directly related to the type of session in which a course is offered. A full year course, or a semester course, or a quarter course, may all offer semester credits or quarter credits as the credit unit. In version 1.0.0 of the schema, there were several enumerated values that contained trailing spaces. New values have been included in this version without the trailing spaces. The values with the trailing spaces are deprecated and will be deleted in a future release.*				
GradePointAverage	Optional	The value of the total quality points divided by the Credit Hours for Grade Point Average	Recommended	minOcc 0 maxOcc 1 xs:decimal
Comment: *For example, if the student had enrolled for 10 semester credits, passed 8 credits with grades of B worth 3 grade points for each credit, and 2 semester credits with grades of F worth 0 grade points, then the calculation would be 24 grade points divided by 10 or a GPA of "2.4" or "2.40" or "2.400" depending on the policy of the sending school.*				
TotalQualityPoints	Optional	The total value of quality points used for the calculation of the Grade Point Average	Recommended	minOcc 0 maxOcc 1 xs:decimal
Comment: *If a student earned all grades of B (worth 3 grade points for each credit) in 8.5 credits that count toward this award or degree and this program, then the value of this data element would be "25.5".*				
CreditHoursforGPA	Optional	The total value of credit hours used to calculate the Grade Point Average	Recommended	minOcc 0 maxOcc 1 xs:decimal
Comment: *If a student earned grades of A (worth 4 grades points per unit) in 3 semester credits, grades of F (worth 0 points per credit) in 4 credits; and withdrew from 5 credits, then the total credit hours for GPA would be "7".*				
GPARangeMinimum	Optional	The minimum possible Grade Point Average	Recommended	minOcc 0 maxOcc 1 xs:decimal
Comment: *If the lowest possible grade is an F and a grade of F is valued at 0 grade points, then this value would be "0", or "0.0" or "0.00".*				
GPARangeMaximum	Optional	The maximum possible Grade Point Average	Recommended	minOcc 0 maxOcc 1 xs:decimal
Comment: *If the highest possible grade is an A and a grade of A is valued at 4 grade points, then this value would be "4" or "4.0" or "4.00", etc.*				
NoteMessage	Optional Repeatable	Additional information about the GPA	Not Recommended	minOcc 0 maxOcc ∞ minLength 1 maxLength 80
Comment: *The GPA included at this point in the Schema represents the overall GPA for the student's entire record included on the transcript for this school.*				

Student.AcademicRecord.AcademicSummary.GPA (Continued)

Code illustration:

```
<GPA>
    <CreditHoursAttempted>10.5</CreditHoursAttempted>
    <CreditHoursEarned>6.5</CreditHoursEarned>
    <CreditHoursRequired/>
    <CreditHoursDeficient/>
    <CreditUnit>Semester</CreditUnit>
    <GradePointAverage>2.235</GradePointAverage>
    <TotalQualityPoints>19</TotalQualityPoints>
    <CreditHoursforGPA>8.5</CreditHoursforGPA>
    <GPARangeMinimum>0</GPARangeMinimum>
    <GPARangeMaximum>4</GPARangeMaximum>
    <NoteMessage/>
</GPA>
```

Student.AcademicRecord.AcademicSummary.AcademicHonors

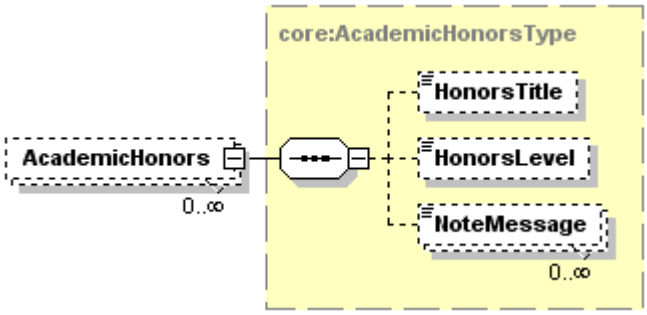

Tag Name	Schema Use	Description	Recommended Use	Format
HonorsTitle	Optional	The descriptive title for the honors received	Recommended	minOcc 0 maxOcc 1 minLength 1 maxLength 30
Comment: *There is a variety of names for these honors in the United States. Some common ones are "Valdictorian", "Salutatorian", "With Honors", "Magna Cum Laude", etc.*				
HonorsLevel	Optional	A code value representing 1st highest honor, 2nd highest and 3rd highest	Recommended	minOcc 0 maxOcc 1 **Enumerations:** FirstHighest SecondHighest ThirdHighest
Comment: *Honors Level is critical to understanding the context of Honors Title.*				
NoteMessage	Optional Repeatable	Additional information about the Academic Honors	Not Recommended	minOcc 0 maxOcc ∞ minLength 1 maxLength 80
Comment: *This would be one appropriate place in the Schema to include honors not specifically tied to the diploma awarded. Examples might be "AP Scholars", "Sigma Alpha Tau", etc.*				

Code illustration:

```
<AcademicHonors>
    <HonorsTitle>Cum Laude</HonorsTitle>
    <HonorsLevel>ThirdHighest</HonorsLevel>
    <NoteMessage/>
</AcademicHonors>
```

Student.AcademicRecord.AcademicSummary.AcademicProgram

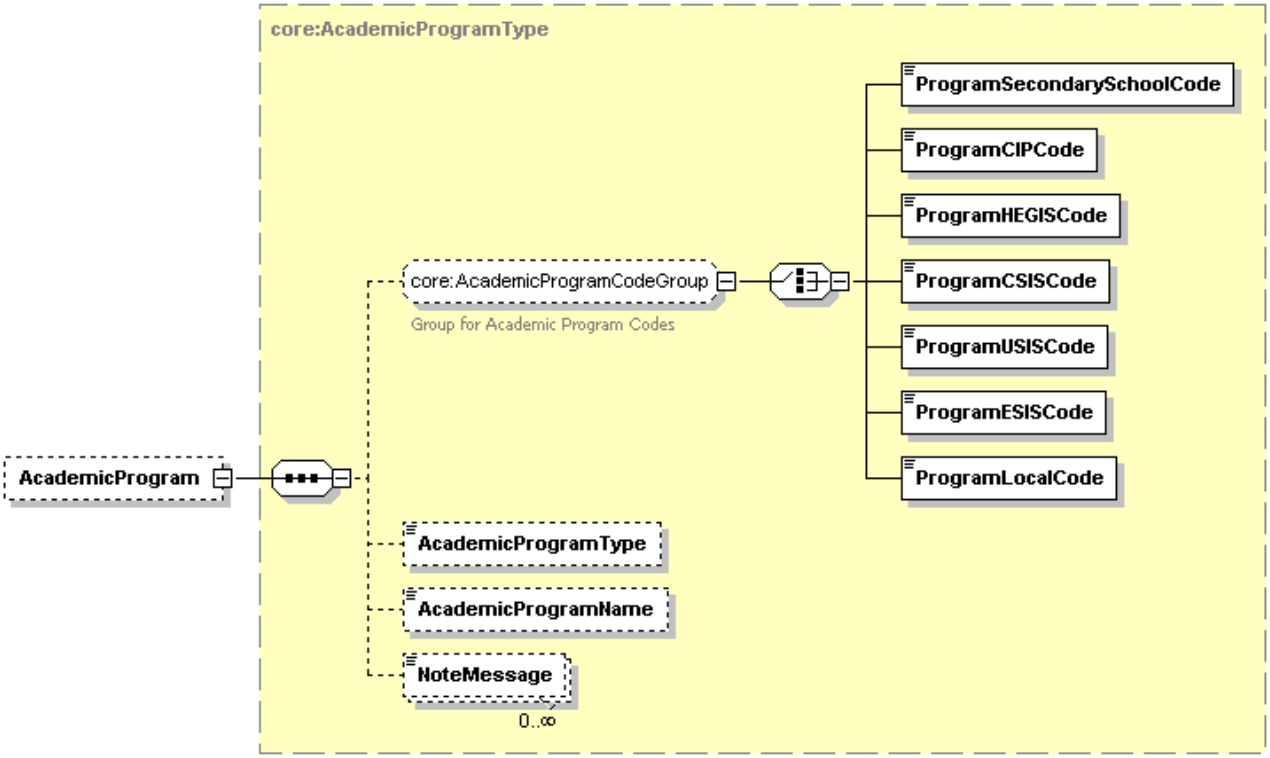

Tag Name	Schema Use	Description	Recommended Use	Format
ProgramSecondarySchoolCode	Optional exclusive choice	Code indicating a field of study for high school students	Not Recommended	minOcc 0 maxOcc 1 **Enumerations:** CareerPrep CollegePrep CollegePrepOrCollegeTechPrep CollegeTechPrep General Occupational Vocational
Comment: *This new code set is for the High School Transcript Only.*				
ProgramCIPCode	Optional exclusive choice	Code indicating a discipline or field of study assigned by the Classification of Instructional Programs	Recommended choice	minOcc 0 maxOcc 1 minLength 5 maxLength 7
Comment: *The US Department of Education's National Center for Education Statistics publishes an updated version of the CIP programs every ten years. The latest version was released in the year 2000.*				
ProgramHEGISCode	Optional exclusive choice	Code indicating a discipline or field of study assigned by Higher Education General Information Survey	Recommended choice	minOcc 0 maxOcc 1 minLength 6 maxLength 20
ProgramCSISCode	Optional exclusive choice	Code indicating a discipline or field of study assigned by Statistics Canada Canadian College Student Information System	Recommended choice	minOcc 0 maxOcc 1 minLength 5 maxLength 5

Tag Name	Schema Use	Description	Recommended Use	Format
ProgramUSISCode	Optional exclusive choice	Code indicating a discipline or field of study assigned by the Statistics Canada University Student Information System.	Recommended choice	minOcc 0 maxOcc 1 minLength 5 maxLength 5
ProgramESISCode	Optional exclusive choice	Code indicating a discipline or field of study assigned by the Statistics Canada Enhanced Student Information System.	Recommended choice	minOcc 0 maxOcc 1 minLength 1 maxLength 20
Comment: *Although the Academic Program Code Group is optional, if it is included, then you must send one and only one of the above codes. The last three code sets shown above are only applicable for postsecondary schools in Canada.*				
ProgramLocalCode	Optional exclusive choice	A code set typically used by one school or school system	Not Recommended	minOcc 0 maxOcc 1 minLength 1 maxLength 20
Comment: *Although the Academic Program Code Group is optional, if it is included, then you must send one and only one of the above codes. The last code set would not typically be used on a student transcript and the three before that one is only appropriate for postsecondary schools in Canada.*				
AcademicProgramType	Optional	Indicates whether the academic program is a major, minor, area of concentration or specialization, etc.	Recommended	minOcc 0 maxOcc 1 **Enumerations:** Concentration Focus Major Minor SecondMajor Specialization
AcademicProgramName	Optional	Literal name of program, major, or field of study.	Recommended	minOcc 0 maxOcc 1 minLength 1 maxLength 60
NoteMessage	Optional Repeatable	Additional information about the Academic Program	Not Recommended	minOcc 0 maxOcc ∞ minLength 1 maxLength 80

Code illustration:

```
<AcademicProgram>
    <ProgramCIPCode>54.0102</ProgramCIPCode>
    <AcademicProgramType>Major</AcademicProgramType>
    <AcademicProgramName>American History (United States)</AcademicProgramName>
    <NoteMessage/>
</AcademicProgram>
```

Student.AcademicRecord.AcademicSession

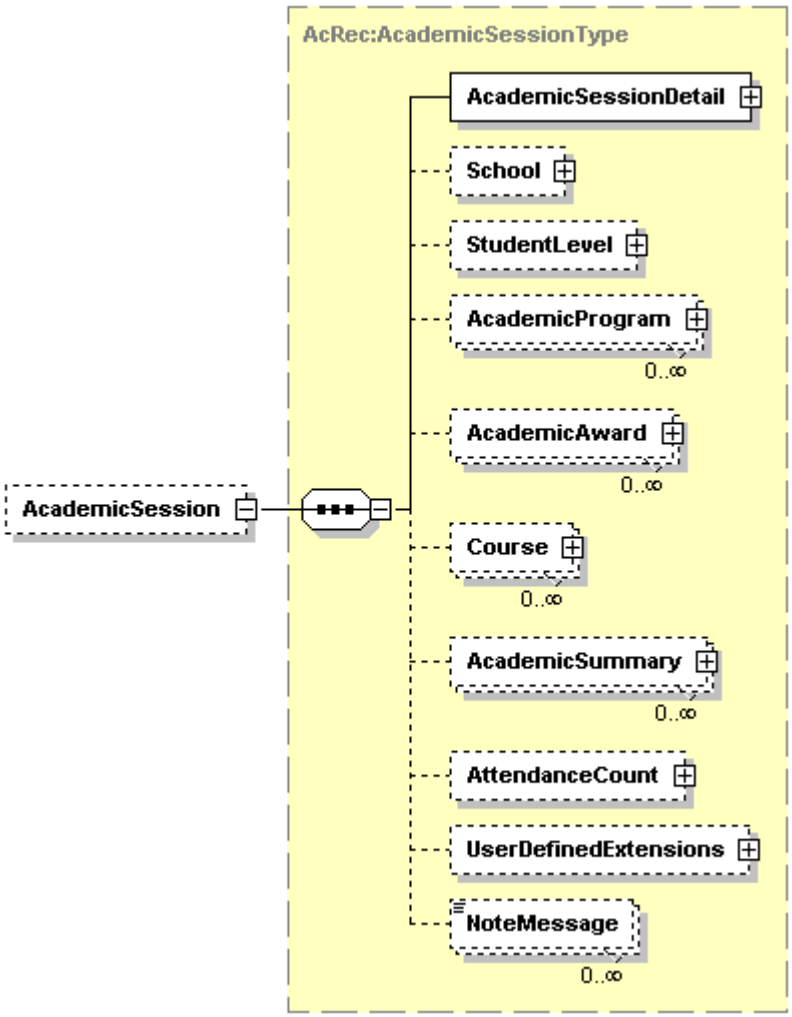

Tag Name	Schema Use	Description	Recommended Use	Format
AcademicSessionDetail	Required	Information identifying the time period for the beginning of this session	Required	minOcc 1 maxOcc 1
Comment: *The Session Designator within the Academic Session Detail is used to indicate the starting year and month of major academic terms or sessions within the sending school's calendar. For example, a typical fall term would begin in August or September. So, for a fall term that began in August of the year 2005, the value of this field would be "2005-08". All classes that began in this month and year would normally be included within this session designator, regardless of the ending dates of the classes within this session. Therefore, all classes with this same session designator would be included in the academic summary for this session. It is also possible for other courses that began later than the month and year noted here, might also have this same session designator, if they are generally considered to be within the academic session or term.* *This complex data element will be expanded on page 129 which follows.*				
School	Optional	Override School	Conditional	minOcc 0 maxOcc 1
Comment: *Recommended when the school for this AcademicSession differs from the Sending institution. Not Recommended when this AcademicSession belongs to the Sending institution. This complex data element will be expanded on page 131 which follows.*				

Tag Name	Schema Use	Description	Recommended Use	Format
StudentLevel	Optional	An indication of the classification of the student at the time of this Academic Session	Optional	minOcc 0 maxOcc 1
Comment: *This complex data element will be expanded on page 136 which follows.*				
AcademicProgram	Optional Repeatable	The major or degree objectives for the student at the time of this session	Optional	minOcc 0 maxOcc ∞
Comment: *This complex data element will be expanded on page 137 which follows.*				
AcademicAward	Optional Repeatable	Academic awards associated with this session	Not Recommended	minOcc 0 maxOcc ∞
Comment: *The developers of the PESC College Transcript Schema recommend that the most appropriate place in the schema to indicate an award is at the highest level of the schema, which is Student.AcademicRecord.AcademicAward. We recommend only awards that are associated specifically with this session be included here. This complex data element will be expanded on page 139 which follows.*				
Course	Optional Repeatable	Courses associated with this session	Recommended	minOcc 0 maxOcc ∞
Comment: *This complex data element will be expanded on page 142 which follows.*				
AcademicSummary	Optional Repeatable	Academic summary for this session	Optional	minOcc 0 maxOcc ∞
Comment: *It is typical for an academic summary to be included for the courses taken in each session or term on a college transcript. This complex data element will be expanded on page 168 which follows.*				
AttendanceCount	Optional	A summary of the days (or partial days) that the student attended this session	Not Recommended	minOcc 0 maxOcc 1
Comment: *AttendanceCount would not be included on a typical College Transcript.*				
UserDefinedExtensions	Optional	A mini schema containing formatted data	Optional	minOcc 0 maxOcc 1
Comment: *UserDefinedExtensions would be used by a group of trading partners within a state or region or who might use the same vendor. The mini schema would be agreed upon by those trading partners prior to exchanging any transcripts. Those not in that group of trading partners would simply ignore this complex data element.*				
NoteMessage	Optional Repeatable	Additional information about the academic session	Not Recommended	minOcc 0 maxOcc ∞ minLength 1 maxLength 80

Student.AcademicRecord.AcademicSession (Continued)

Code illustration:

```
<AcademicSession>
    <AcademicSessionDetail>

    </AcademicSessionDetail>
    <School>

    </School>
    <StudentLevel>

    </StudentLevel>
    <AcademicProgram>

    </AcademicProgram>
    <AcademicAward>

    </AcademicAward>
    <Course>

    </Course>
    <Course>

    </Course> [repeat as needed]
    <AcademicSummary>

    </AcademicSummary>
    <AttendanceCount/>
    <UserDefinedExtensions/>
    <NoteMessage/>
</AcademicSession>
```

Student.AcademicRecord.AcademicSession.AcademicSessionDetail

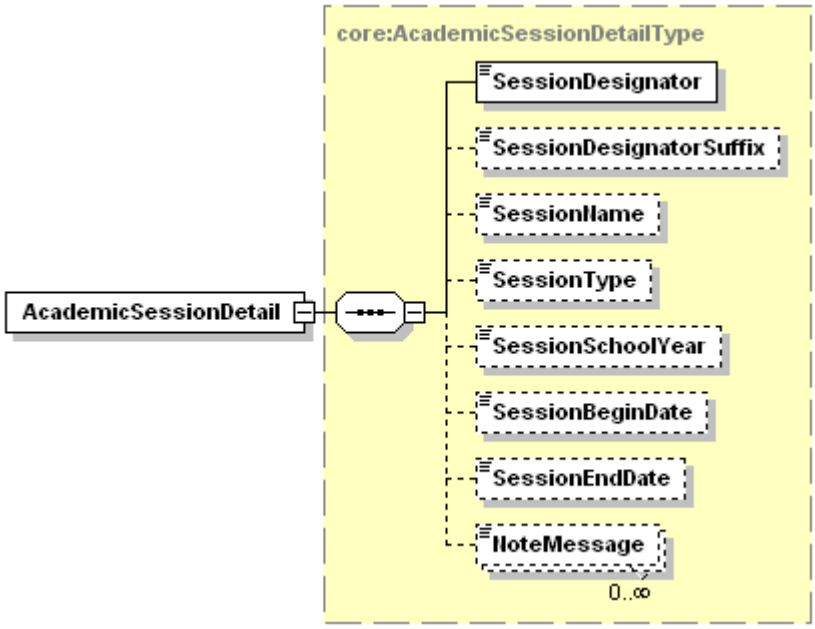

Tag Name	Schema Use	Description	Recommended Use	Format
SessionDesignator	Required	The academic session for which the data are recorded and applicable.	Required	minOcc 1 maxOcc 1 YearMonth (ccyy-mm)
Comment: *The Session Designator is used to indicate the starting year and month of major academic terms within the sending school's calendar. For example, a typical fall term would begin in August or September. So, for a fall term that began in August of the year 2005, the value of this field would be "2005-08". All classes that began in this month and year would normally be included within this session designator, regardless of the ending dates of the classes within this session. Therefore, all classes with this same session designator would be included in the academic summary for this session. It is also possible for other courses that began later than the month and year noted here, might also have this same session designator, if they are generally considered to be within the academic session or term.*				
SessionDesignatorSuffix	Optional	A free form extension to the session ID to differentiate discreet sub-sessions within the same session	Optional	minOcc 0 maxOcc 1 minLength 1 maxLength 10
Comment: *If you have a mini term or short term within the major term, you can use this field to identify those classes. They could be identified with different beginning or ending dates, but they would still be a part of the major session designator. Typical entries in this field might be "Mini Term", "Term A", "Term B", "Session 1".*				
SessionName	Optional	Free-form name of session.	Recommended	minOcc 0 maxOcc 1 minLength 1 maxLength 30
Comment: *For example, "Fall Semester 2002" or "Fall Semester 2003" or "Fall Semester 2002-2003".*				

Tag Name	Schema Use	Description	Recommended Use	Format
SessionType	Optional	Indicates the type of academic session at an educational institution.	Recommended	minOcc 0 maxOcc 1 **Enumerations:** FullYear Semester Trimester Quarter Quinmester MiniTerm SummerSession Intersession LongSession FallSession FourOneFourPlan Continuous DiffersByProgram Other TwelveMonth
Comment: *This is the type of calendar used by the sending school. It does not refer to the type of units of credit awarded.*				
SessionSchoolYear	Optional	This is the range of years that are considered to be a school year.	Optional	minOcc 0 maxOcc 1 Pattern: \d(4)-\d(4)
Comment: *The appropriate values are a range of years. The format would be ccyy-ccyy. A typical example would be the school year "2004-2005".*				
SessionBeginDate	Optional	Actual calendar date when session begins.	Optional	minOcc 0 maxOcc 1 xs:date
Comment: *An example for a fall term might be "2005-08-22". The date format is ccyy-mm-dd.*				
SessionEndDate	Optional	Actual calendar date when session ends.	Optional	minOcc 0 maxOcc 1 xs:date
Comment: *An example for a fall term might be "2005-12-16" or "2006-01-18".*				
NoteMessage	Optional Repeatable	Additional information about the Academic Session	Not Recommended	minOcc 0 maxOcc ∞ minLength 1 maxLength 80

Code illustration:

```
<AcademicSessionDetail>
    <SessionDesignator>2005-08</SessionDesignator>
    <SessionDesignatorSuffix>1</SessionDesignatorSuffix>
    <SessionName>Fall Semester 2005</SessionName>
    <SessionType>Semester</SessionType>
    <SessionBeginDate>2005-08-22</SessionBeginDate>
    <SessionEndDate>2005-12-16</SessionEndDate>
    <NoteMessage/>
</AcademicSessionDetail>
```

Student.AcademicRecord.AcademicSession.School

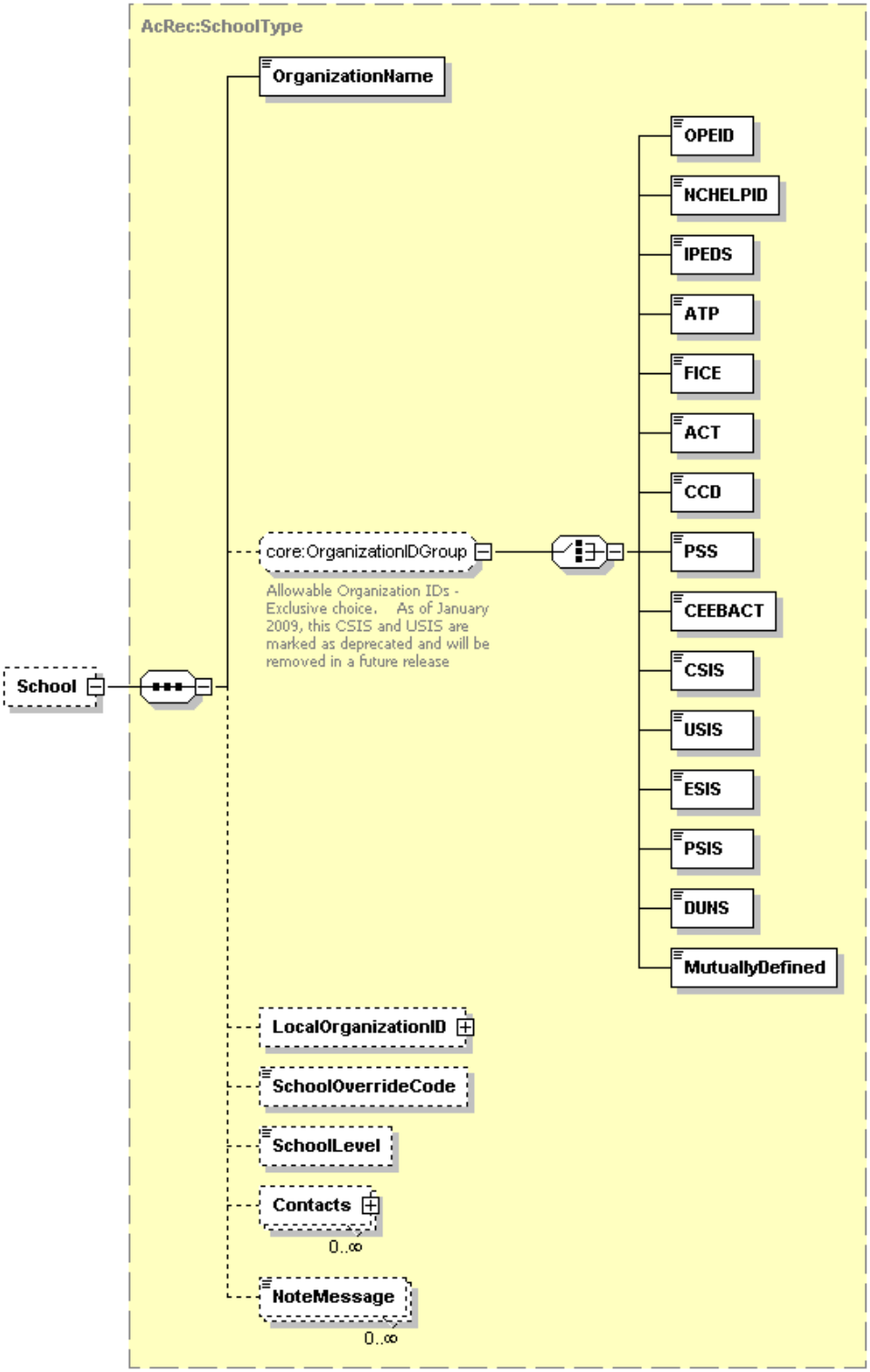

Student.AcademicRecord. AcademicSession.School (Continued)

Tag Name	Schema Use	Description	Recommended Use	Format
OrganizationName	Required	Name of Override School	Required	minOcc 1 maxOcc 1 minLength 1 maxLength 60
OPEID	Optional choice	The unique identifier assigned by the Office of Postsecondary Education for each data exchange partner.	Recommended choice	minOcc 0 maxOcc 1 minLength 3 maxLength 8
Comment: *The OPEID would only be an appropriate choice if the courses taken in this session were taken at a postsecondary institution in the United States.*				
NCHELPID	Optional choice	The unique identifier assigned by National Council on Higher Education Loan Programs for each data exchange partner.	Not Recommended	minOcc 0 maxOcc 1 minLength 3 maxLength 8
Comment: *The NCHELPID is not an appropriate code set for the College Transcript*				
IPEDS	Optional choice	The unique identifier assigned by the National Center for Education Statistics for the IIntegrated Postsecondary Education Data System for each postsecondary data exchange partner.	Recommended choice	minOcc 0 maxOcc 1 minLength 6 maxLength 6
Comment: *The IPEDS would be an appropriate choice if the courses taken in this session were taken at a postsecondary institution in the United States.*				
ATP	Optional choice	The unique identifier assigned for the Admissions Testing Program by the College Board for each postsecondary data exchange partner.	Recommended choice	minOcc 0 maxOcc 1 minLength 6 maxLength 6
Comment: *The ATP would be an appropriate choice if the courses taken in this session were taken at a postsecondary institution.*				
FICE	Optional choice	The unique identifier assigned for the Federal Interagency Committee on Education by the US Department of Education's Natiional Center for Education Statistics for each postsecondary data exchange partner	Recommended choice	minOcc 0 maxOcc 1 minLength 6 maxLength 6
Comment: *The FICE would be an appropriate choice if the courses taken in this session were taken at a postsecondary institution. However, the FICE code set has not been updated or maintained by NCES since the end of the last century.*				
ACT	Optional choice	The unique identifier assigned by the American College Testing or ACT for each postsecondary data exchange partner. See www.act.org.	Recommended choice	minOcc 0 maxOcc 1 minLength 4 maxLength 4
Comment: *The ACT would be an appropriate choice if the courses taken in this session were taken at a postsecondary institution.*				
CCD	Optional choice	The unique identifier assigned by the US Department of Education's National Center for Education Statistics as the Common Core of Data for each K12 data exchange partner.	Not Recommended	minOcc 0 maxOcc 1 minLength 12 maxLength 12
Comment: *The CCD would only be an appropriate choice if the courses taken in this session were taken at a secondary school in the United States.*				

Tag Name	Schema Use	Description	Recommended Use	Format
PSS	Optional choice	The unique identifier assigned by the US Department of Education's National Center for Education Statistics for private K12 schools in the US	Not Recommended	minOcc 0 maxOcc 1 minLength 8 maxLength 8
Comment: *The PSS would only be an appropriate choice if the courses taken in this session were taken at a private secondary school in the United States.*				
CEEBACT	Optional choice	The unique identifier assigned by the College Entrance Examining Board and ACT for each data exchange partner.	Not Recommended	minOcc 0 maxOcc 1 minLength 6 maxLength 6
Comment: *The CEEBACT would only be an appropriate choice if the courses taken in this session were taken at a secondary school.*				
CSIS	Optional choice	The unique identifier assigned by the Statistics Canada Canadian College Student Information System for each data exchange partner in Canada	Not Recommended	minOcc 0 maxOcc 1 minLength 6 maxLength 6
Comment: *The CSIS would not be a good choice since it has been replaced by the PSIS code set of Canadian postsecondary schools in Canada*				
USIS	Optional choice	The unique identifier assigned by the Statistics Canada University Student Information System for each data exchange partner in Canada	Not Recommended	minOcc 0 maxOcc 1 minLength 6 maxLength 6
Comment: *The USIS would not be a good choice since it has been replaced by the PSIS code set of Canadian postsecondary schools in Canada*				
ESIS	Optional choice	The unique identifier assigned by the Statistics Canada Enhanced Student Information System for each data exchange partner.in Canada	Not Recommended	minOcc 0 maxOcc 1 minLength 8 maxLength 8
Comment: *The ESIS would not be a good choice since it has been replaced by the PSIS code set of Canadian postsecondary schools in Canada*				
PSIS	Optional choice	The unique identifier assigned by the Statistics Canada Postsecondary Student Information System for each data exchange partner.in Canada	Recommended choice	minOcc 0 maxOcc 1 minLength 8 maxLength 8
Comment: *The PSIS would be a good choice for a postsecondary school in Canada.*				
DUNS	Optional choice	Data Universal Numbering System (DUNS), unique nine character company identification number issued by Dun and Bradstreet Corporation.	Not Recommended	minOcc 0 maxOcc 1 minLength 9 maxLength 9
Comment: *The DUNS number would not be an appropriate code set to use to identify the postsecondary school at which courses were taken.*				
MutuallyDefined	Optional choice	A set of codes to identify organizations that cannot be clearly and easily identified with one of the other code sets	Optional choice	minOcc 0 maxOcc 1 minLength 1 maxLength 60
Comment: *Mutually Defined can only be used when the organization is not included in one of the other code sets. It would not normally be used in an exchange of college transcripts among schools.*				

Tag Name	Schema Use	Description	Recommended Use	Format
LocalOrganizationID	Optional	A code set typically used by a state, province or region to further identify the receiving school or agency	Optional	minOcc 0 maxOcc 1
Comment: *This complex data element will be expanded on page 135 which follows.*				
SchoolOverrideCode	Optional	The source of the academic credit if not awarded by the home or parent institution. *Institutional* - Institutional Agreement *Multicampus* - Multiple Campus Course Offering *Transfer* - Transfer Credit *StudyAbroad* - Study Abroad *Coop* - Cooperative Program *Reciprocal* - Reciprocal Exchange *Internship* - Internship	Recommended	minOcc 0 maxOcc 1 **Enumerations:** Institutional Multicampus Transfer StudyAbroad Coop Reciprocal Internship
SchoolLevel	Optional	Indicates level of Override School	Recommended	minOcc 0 maxOcc 1 **Enumerations:** Elementary HighSchool Secondary Postsecondary
Contacts	Optional Repeatable	Contact info at Override School	Not Recommended	minOcc 0 maxOcc ∞
Comment: *It would be helpful, but unusual for the sending school to include this information. If this information were to be included, see the expansion of it on page 78 of this Guide.*				
NoteMessage	Optional Repeatable	Additional information about the Override School	Not Recommended	minOcc 0 maxOcc ∞ minLength 1 maxLength 80
Comment: *This entire section of the Schema would only be included if the courses taken during this session were taken at a school other than the sending school.*				

Code illustration:

```
<School>
    <OrganizationName>Texas A and M University</OrganizationName>
    <ATP>006003</ATP>
    <LocalOrganizationID>

    </LocalOrganizationID>
    <SchoolOverrideCode>Transfer</SchoolOverrideCode>
    <SchoolLevel>Postsecondary</SchoolLevel>
    <Contacts/>
    <NoteMessage/>
</School>
```

Student.AcademicRecord.AcademicSession.School. LocalOrganizationID

Note: Although the complex data element LocalOrganizationID is an optional data element, if you choose to send LocalOrganizationID, then you must send both LocalOrganizationIDCode and LocalOrganizationIDQualifier.

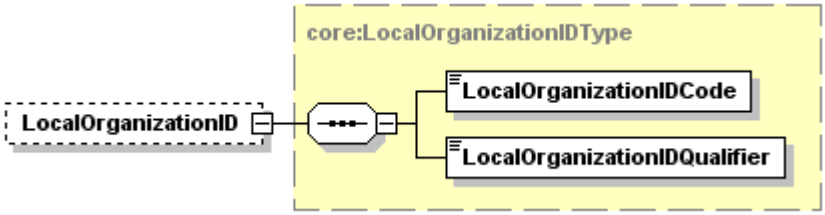

Tag Name	Schema Use	Description	Recommended Use	Format
LocalOrganizationIDCode	Required	The code assigned for the receivng school by the state, province or other mutually defined agency specified in the LocalOrganizationIDQualifier that follows.	Required	minOcc 1 maxOcc 1 minLength 1 maxLength 35
Comment: *This is a required data element only if the LocalOrganization ID data element is sent. This is typically the administrative school code assigned by a state or province to identify the override school in that state.*				
LocalOrganizationIDQualifier	Required	This is the state, province or other mutually definded agency that assigned the Local D Code above.	Required	minOcc 1 maxOcc 1 See Code Set in Appendix A
Comment: *This is a required data element only if the Local Organization ID data element is sent. This is typically the state or province that assigned the code to identify the receiving school in that state.*				

Code illustration:

```
<LocalOrganizationID>
    <LocalOrganizationIDCode>GA-430000356</LocalOrganizationIDCode>
    <LocalOrganizationIDQualifier>GA</LocalOrganizationIDQualifier>
</LocalOrganizationID>
```

Student.AcademicRecord.AcademicSession.StudentLevel

Note: Although StudentLevel is an optional complex data element, if it is included, then the data element StudentLevelCode must be included.

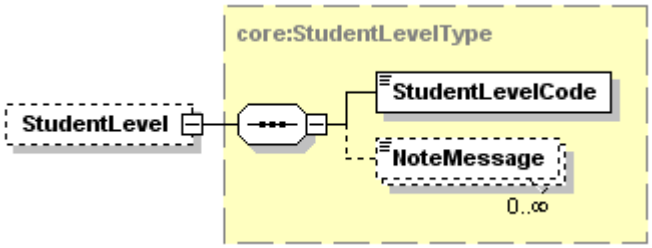

Tag Name	Schema Use	Description	Recommended Use	Format
StudentLevelCode	Required	The student's grade level or school year or academic classification at the start of this academic session	Required	minOcc 1 maxOcc 1 **Enumerations:** NinthGrade TenthGrade EleventhGrade TwelfthGrade Postsecondary PostsecondaryBachelor PrelimnaryYear NonDegree CollegeFirstYear CollegeFirstYearAttended Before CollegeSophomore CollegeJunior CollegeSenior CollegeFifthYear PostBaccalaureate GraduateNonDegree GraduateFirstYear GraduateSecondYear GraduateThirdYear GraduateBeyondThirdYear Professional ProfessionalFirstYear ProfessionalSecondYear ProfessionalThirdYear ProfessionalBeyondThird Year MastersQualifying Masters Doctoral Postdoctoral
NoteMessage	Optional Repeatable	Additional information about the student level	Not Recommended	minOcc 0 maxOcc ∞ minLength 1 maxLength 80

Code illustration:

```
<StudentLevel>
    <StudentLevelCode>CollegeFirstYear</StudentLevelCode>
    <NoteMessage />
</StudentLevel>
```

Student.AcademicRecord.AcademicSession.AcademicProgram

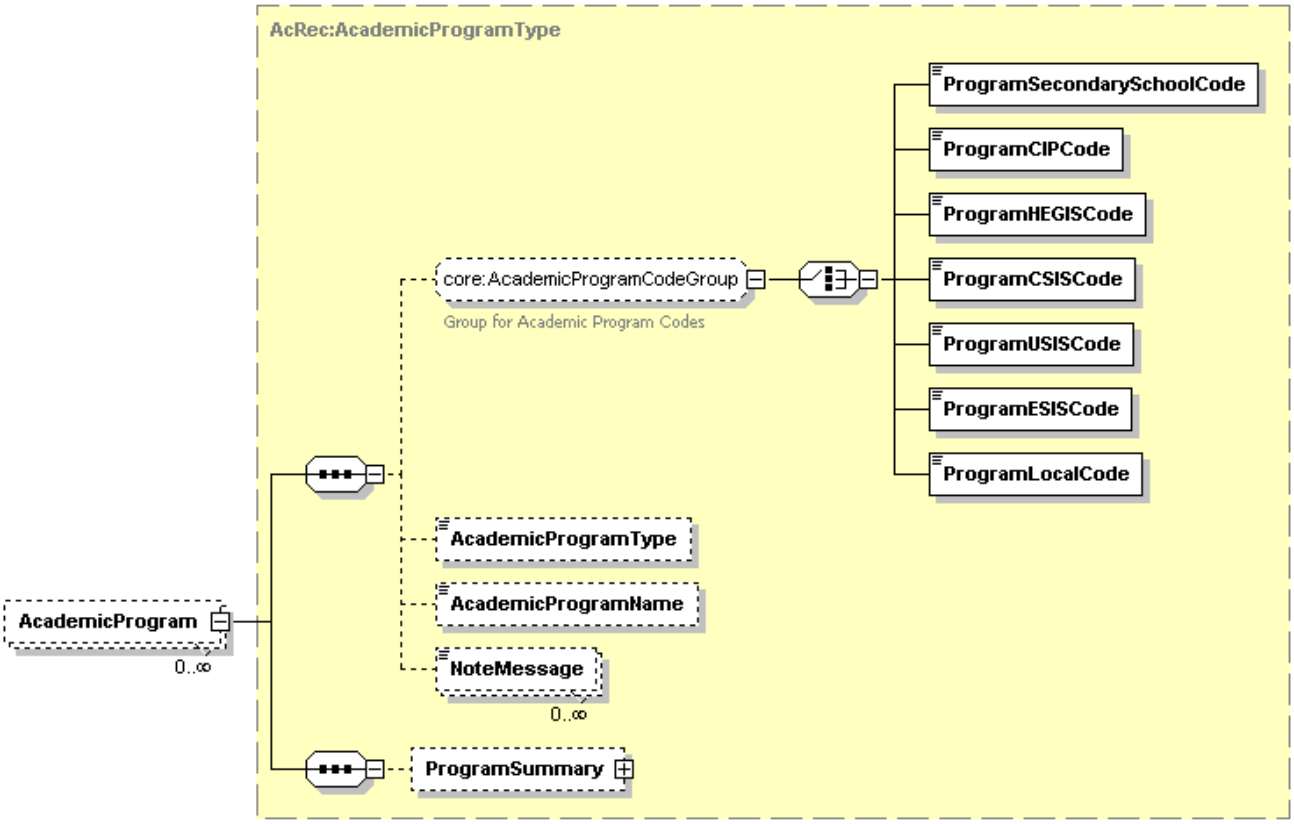

Tag Name	Schema Use	Description	Recommended Use	Format
ProgramSecondarySchoolCode	Optional exclusive choice	Code indicating a field of study for a secondary school student	Not Recommended	minOcc 0 maxOcc 1 **Enumerations:** CareerPrep CollegePrep CollegePrepOrCollegeTechPrep CollegeTechPrep General Occupational Vocational
ProgramCIPCode	Optional exclusive choice	Code indicating a discipline or field of study assigned by the Classification of Instructional Programs	Recommended choice	minOcc 0 maxOcc 1 minLength 5 maxLength 7
ProgramHEGISCode	Optional exclusive choice	Code indicating a discipline or field of study assigned by Higher Education General Information Survey	Recommended choice	minOcc 0 maxOcc 1 minLength 6 maxLength 20
ProgramCSISCode	Optional exclusive choice	Code indicating a discipline or field of study assigned by Statistics Canada Canadian College Student Information System	Recommended choice	minOcc 0 maxOcc 1 minLength 5 maxLength 5
ProgramUSISCode	Optional exclusive choice	Code indicating a discipline or field of study assigned by the Statistics Canada University Student Information System.	Recommended choice	minOcc 0 maxOcc 1 minLength 5 maxLength 5

Tag Name	Schema Use	Description	Recommended Use	Format
ProgramESISCode	Optional exclusive choice	Code indicating a discipline or field of study assigned by the Statistics Canada Enhanced Student Information System.	Recommended choice	minOcc 0 maxOcc 1 minLength 1 maxLength 20
Comment: *The last three choices shown immediately above would be appropriate for programs offered by postsecondary schools in Canada.*				
ProgramLocalCode	Optional exclusive choice	Code set for specific programs used within a single school or within a state or region	Not Recommended	minOcc 0 maxOcc 1 minLength 1 maxLength 20
Comment: *The ProgramLocalCode would not be a good choice for use with the Student Transcript.*				
AcademicProgramType	Optional	Indicates whether the academic program is a major, minor, area of concentration or specialization.	Recommended	minOcc 0 maxOcc 1 **Enumerations:** Concentration Focus Major Minor SecondMajor Specialization
AcademicProgramName	Optional	Literal name of program, major, or field of study.	Recommended	minOcc 0 maxOcc 1 minLength 1 maxLength 60
NoteMessage	Optional Repeatable	Additional information about the academic program	Not Recommended	minOcc 0 maxOcc ∞ minLength 1 maxLength 80
ProgramSummary	Optional	Summary information about the Academic Program	Not Recommended	minOcc 0 maxOcc 1
Comment: *It would be unusual to find a program summary at this level for an academic session on a college transcript. If it is included, you will find an expansion of this data element on page 96 in this Guide.*				

Code illustration:

```
<AcademicProgram>
    <ProgramCIPCode>54.0102</ProgramCIPCode>
    <AcademicProgramType>Major</AcademicProgramType>
    <AcademicProgramName>American History (United States)</AcademicProgramName>
    <NoteMessage/>
    <ProgramSummary/>
</AcademicProgram>
```

Student.AcademicRecord.AcademicSession.AcademicAward

Note: It is recommended that the appropriate place for all Academic Awards is at the level of Student.AcademicRecord.AcademicAward. However, if this award is specific to this session, then it could be included here.

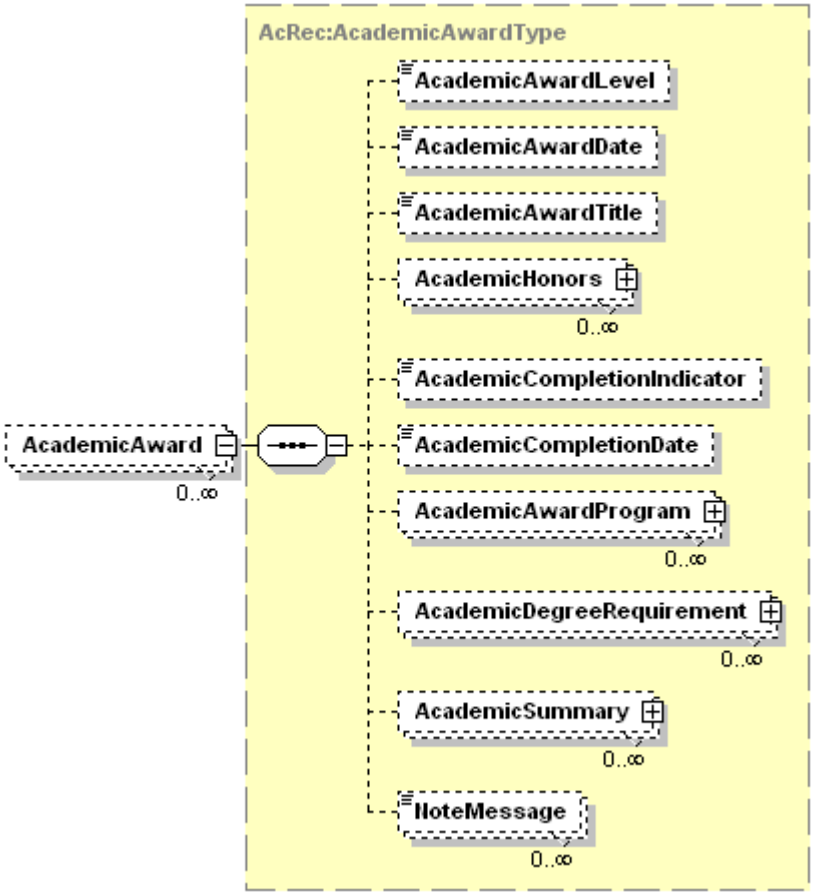

Tag Name	Schema Use	Description	Recommended Use	Format
AcademicAwardLevel	Optional	The level of the degree, certificate, or award granted for the successful completion of requirements of an academic program. 1.1 – Certificate of Completion 1.2 – Certificate of Proficiency 2.0 – Certificate 2.1 – Postsecondary Certificate or Diploma (less than one year) 2.2 – Postsecondary Certificate or Diploma (one year or more, but less than four years) 2.3 – Associate Degree (e.g., Associate in Arts, Associate in Science) 2.4 – Baccalaureate Degree	Recommended	minOcc 0 maxOcc 1 **Enumerations:** 1.1 1.2 2.0 2.1 2.2 2.3 2.4 2.5 2.6 2.7 3.1 3.2 4.1 4.2 4.3 4.4 4.5

Tag Name	Schema Use	Description	Recommended Use	Format
		2.5 – Baccalaureate (Honors) Degree 2.6 – Postsecondary Certificate or Diploma (one year or more, but less than two years) 2.7 – PostsecondaryCertificate or Diploma (two years or more, but less than four years) 3.1 – First Professional Degree 3.2 – Post-Professional Degree 4.1 – Graduate Certificate 4.2 – Master's Degree 4.3 – Intermediate Graduate Degree 4.4 – Doctoral Degree 4.5 – Post-doctoral Award FrenchBaccalaureate CEGEP – Completion of secondary school plus one year of college credits in Canada		FrenchBaccalaureate CEGEP
AcademicAwardDate	Optional	The date on which the academic award was conferred.	Recommended	minOcc 0 maxOcc 1 xs:date
Comment: *This is the nominal date when the award was granted. It might not be the same as the actual date of completion of the award requirements. If not the same, then this date will usually be later. The format for the date is ccyy-mm-dd.*				
AcademicAwardTitle	Optional	The descriptive title for the academic award.	Recommended	minOcc 0 maxOcc 1 minLength 1 maxLength 80
AcademicHonors	Optional Repeatable	Honors information for the academic award.	Recommended	minOcc 0 maxOcc ∞
Comment: *This complex data element was expanded on page 123 earlier in this Guide.*				
AcademicCompletionIndicator	Optional	An indication that the degree-seeking student completed all of the requirements for his or her academic program. Not used for Non-Degree programs.	Recommended	minOcc 0 maxOcc 1 true/false
Comment: *The value is "true" or "false" with all letters in lower case. The "true" condition would be typically be met on or before the date indicated in the "AcademicAwardDate" field, if that field is sent. If neither the completion date nor the award date is included, then sending this indicator is even more important.*				
AcademicCompletionDate	Optional	The date on which the student's requirements for the degree were met or completed.	Recommended	minOcc 0 maxOcc 1 xs:date
Comment: *This is the actual date when all requirements for the award were completed. It might not be the same as the nominal date of the award.*				
AcademicAwardProgram	Optional Repeatable	Information related to the specific area of study (e.g., major) under which the award was granted.	Recommended	minOcc 0 maxOcc ∞
Comment: *This complex data element was expanded on page 94 earlier in this Guide.*				

Tag Name	Schema Use	Description	Recommended Use	Format
AcademicDegreeRequirement	Optional Repeatable	Thesis or dissertation information if required for the award.	Recommended	minOcc 0 maxOcc ∞
Comment: *This complex data element was expanded on page 105 earlier in this Guide.*				
AcademicSummary	Optional Repeatable	Academic summary information pertaining to the award.	Recommended	minOcc 0 maxOcc ∞
Comment: *This complex data element was expanded on page106 earlier in this Guide.*				
NoteMessage	Optional Repeatable	Additional information about the academic award	Recommended	minOcc 0 maxOcc ∞ minLength 1 maxLength 80
Comment: *This is the appropriate place in the Schema to include the awarding of the award only if the school normally includes it in the session in which all the requirements were met. However, the Workgroup that developed the PESC XML Transcript Schema recommends that the award be included under Student.AcademicRecord.AcademicAward unless the award is specifically associated with the academic session.*				

Code illustration:

```
<AcademicAward>
    <AcademicAwardLevel/>
    <AcademicAwardDate/>
    <AcademicAwardTitle/>
    <AcademicHonors/>
    <AcademicCompletionIndicator/>
    <AcademicCompletionDate/>
    <AcademicAwardProgram/>
    <AcademicDegreeRequirement/>
    <AcademicSummary/>
    <NoteMessage/>
</AcademicAward>
```

Student.AcademicRecord.AcademicSession.Course

Tag Name	Schema Use	Description	Recommended Use	Format
CourseCreditBasis	Required	The type of enrollment associated with the credit hours for the course. **AcademicRenewal:** Credits and grades in this course have been forgiven and are no longer used to compute cumulative credits and grade points earned for the student's cumulative totals and grade averages. The process of invoking this credit basis is typically done on a petition or request by the student and is typically done for **all** courses taken by the student prior to a certain date or session. Typical justification for approving the request is that the student has not attended the college (or possibly any college) for a period of several years after that specified date. Good practice is that all the courses and grades remain on the student academic record, but are not included in the computation of the student credits earned nor in the student's grade average and that those courses designated as Academic Renewal cannot be used to satisfy any degree or other requirements. **AdultBasic:** Credits that may be used to qualify a student for a secondary school certificate but are not usually counted toward the award of a standard high school diploma. They may also be used toward postsecondary certificates, but not counted as credits earned toward a postsecondary associate degree or baccalaureate degree. They are frequently used to indicate preparation for a high school diploma. **AdvancedPlacement:** Credits awarded upon satisfactory completion of The College Board's Advanced Placement Program. **AdvancedStanding:** This is a term not normally associated with a course, but rather when the student has demonstrated, typically through means other than a regular credit course, eligibility to enroll in postsecondary courses that require pre-requisite courses or conditions. However, some schools may apply this term to a specific pre-requisite course when not completed under normal	Required	minOcc 1 maxOcc 1 **Enumerations:** Regular AcademicRenewal AdvancedPlacement AdvancedStanding ContinuingEducation Exemption Equivalence InternationalBaccalaureate Military Remedial CreditByExam HighSchoolTransferCredit HighSchoolCreditOnly HighSchoolDualCredit JuniorHighSchoolCredit Major AdultBasic

Tag Name	Schema Use	Description	Recommended Use	Format
		conditions. **ContinuingEducation:** A term most frequently used to describe courses taken at a postsecondary school that do not count toward a standard associate degree or higher. They may be used to satisfy requirements for a secondary or postsecondary certificate. A standard measure is the Continuing Education Unit described as ten contact hours in a non-credit course with prescribed requirements and evaluation methods. However, the term is also used to describe postsecondary course offerings for students who may have previously enrolled as degree seeking students at a college or university and are now taking selected courses at an off campus location. **CreditByExam:** An option that may be approved for a student in selected courses by which the student is allowed to sign up to take an exam that covers the material for the entire course. If the student passes the exam, the student may receive credit and a grade for the course. College policies vary on how the grade is handled. In some cases, only passing grades are posted to the student record. In other cases, only passing grades of Satisfactory or Pass are posted. **Equivalence:** This would not be a common use for CourseCreditBasis, but could be used to indicate that this course is equivalent to another course. **Exemption:** This is an option that may be offered a student to take an exam or transfer course to satisfy a graduation requirement or a pre-requisite course. Some schools also use it to describe a course transferred in from another school primarily to satisfy a prerequisite course or program requirement. The student typically receives no credits for passing the exam or for the transferred course, but the pre-requisite course or graduation requirement is satisfied. **HighSchoolCreditOnly:** This		

Tag Name	Schema Use	Description	Recommended Use	Format
		would typically indicate participation in a high school dual enrollment program. This value would indicate that this course did not result in the award of any college credit, but may have been used to satisfy high school diploma requirements. **HighSchoolDualCredit:** This would typically indicate participation in a high school dual enrollment program. This value would indicate that this course resulted in the award of both college credit as well as credit toward a high school diploma requirements. **HighSchoolTransferCredit:** This value would be used for secondary school transcripts to indicate a course taken at another school and transferred back to the sending high school. **InternationalBaccalaureate:** This is similar to AdvancedPlacement in that credit for the course is awarded as a result of passing an examination. In this case, the exam is part of the two year international education International Baccalaureate Diploma program. Based on the exam and the grade received on the exam, colleges and universities may award transfer credit in specific courses, or may just award a specific number of general education credits. **JuniorHighSchoolCredit:** This value would be used for secondary school transcripts to indicate a course taken at a junior high or middle school and used to satisfy a high school diploma requirement. **Major:** This is not a common use of this data element, but it could be used to indicate that this course satisfies or partially satisfies a requirement for a major in a program. **Military:** This indicates that the credit was awarded as a result of service in one of the branches of the US military. It could be awarded just as a result of completion of basic training and/or a number of years of service, or it could be awarded for specific military courses or exams completed. **Regular:** Probably the most common of the available		

Tag Name	Schema Use	Description	Recommended Use	Format
		enumerated values. This would most likely be the value to use if none of the other values are appropriate. This would be a typical college credit course. **Remedial:** A postsecondary school could use this value to indicate that this course was remedial in nature and does not satisfy any associate or higher degree requirement.		
CourseCreditUnits	Optional	The type of credit (unit, semester, or quarter) associated with the credit hours earned for the course. **CarnegieUnits:** A common unit of credit used in secondary schools in the US. The unit was developed in 1906 by the Carnegie Foundation as a measure of the amount of time a student has studied a subject. For example, a total of 120 hours in one subject -- meeting 4 or 5 times a week for 40 to 60 minutes, for 36 to 40 weeks each year -- earns the student one "Carnegie unit" of high school credit. Fourteen units were deemed to constitute the minimum amount of preparation that may be interpreted as "four years of academic or high school preparation". **ClockHours:** A unit used primarily for non-credit courses, or for a non-credit (but required) lab or clinic part of a college credit course. It is typically defined as either a 50 minute or a 60 minute hour. **ContinuingEducationUnits:** A Continuing Education Unit is defined as ten contact (60 minute) hours in a non-credit course with prescribed requirements and evaluation methods. **NoCredit:** This is typically used for a non credit course for which no credit is ever awarded. However, it could also be used for an individual student for a regular course for which prior agreement has been reached to award no credit for this particular student for this course. **Other:** Any type of a unit of credit not described in any of the other enumerated values. It should be further clarified by an instance of NoteMessage. **Quarter:** A unit of credit that	Recommended	minOcc 0 maxOcc 1 **Enumerations:** NoCredit Quarter Semester Units ClockHours CarnegieUnits ContinuingEducationUnits Unreported Other

Tag Name	Schema Use	Description	Recommended Use	Format
		describes the value of a lecture course that meets for 50 minutes per week for a term or session that meets from 10 to 12 weeks. It is typically associated with a quarter system calendar, but this is not necessarily required. **Semester:** A unit of credit that describes the value of a lecture course that meets for 50 minutes per week for a term or session that meets for 15 or 16 weeks. It is typically associated with a semester or trimester system calendar, but this is not necessarily required. **Units:** This is a loosely defined unit of measure of the worth of the course that is neither a quarter nor a semester unit. It is more often used for secondary school courses. **Unreported:** Since this data element would not normally be required, this value would be rarely used. If the data element were to be required and the credit unit for the course were not known, then this value could be used.		
Comment: *In version 1.0.0 of the schema, there were several errors introduced in the enumerated values of CourseCreditUnits. They incorrectly were introduced into the schema with a trailing space. In this version, new values have been added without the trailing spaces. The values with the incorrect trailing spaces have been deprecated and will be deleted in a future release of the schema.*				
CourseCreditLevel	Optional	The level of credit associated with the credit hours earned for the course.	Recommended	minOcc 0 maxOcc 1 **Enumerations:** Undergraduate LowerDivision UpperDivision Vocational TechnicalPreparatory Graduate Professional Dual DualGraduateUndergraduate GraduateProfessional
Comment: *Usually the same as CourseLevel; differs when the student uses the credit at a level different from the CourseLevel. For example, when the student uses an UpperDivision course (CourseLevel) for Graduate credit (CourseCreditLevel).*				
CourseCreditValue	Optional	Number indicating the credit hours that may be earned in the course.	Recommended	minOcc 0 maxOcc 1 xs:decimal
Comment: *For example, if the course is worth 1 semester credit, and if the student withdrew from the course, but the course still appears on the transcript, then the value of this field is "1". Since it is a decimal field, it could also have a value of "1.0" or "1.00".*				

Tag Name	Schema Use	Description	Recommended Use	Format
CourseCreditEarned	Optional	The number of credits a student earned by the successful completion of a course.	Recommended	minOcc 0 maxOcc 1 xs:decimal
Comment: *For example, if the course is worth 1 semester credit and if the student passed the course, then the value of this field is "1". Since it is a decimal field, it could also have a value of "1.0" or "1.00".*				
CourseAcademicGradeScaleCode	Optional	The grading scale used by an academic educational institution for an academic course.	Recommended	minOcc 0 maxOcc 1 See Appendix H
Comment: *Grade scale is based on the American Medical Colleges Admissions Services (AMCAS) grading scale, values 01 through 99. See Appendix H for a complete list of code values.*				
CourseAcademicGrade	Optional	The final grade awarded for participation in the course.	Recommended	minOcc 0 maxOcc 1 minLength 1 maxLength 10
CourseAcademicGradeStatusCode	Optional	Special enrollment or completion status of this course	Recommended	minOcc 0 maxOcc 1 **Enumerations:** AuditedCourse HonorsGrade Incomplete IncompleteNotResolvedFail InProgress NotYetReported OtherFail OtherPass PassFailFail PassFailPass TransferNoGrade Withdrew WithdrewFailing WithdrewNoPenalty WithdrewPassing
Comment: *For crosswalk purposes from and to the ANSI ASC X12 EDI transaction grade scale codes, the equivalents are 500 – InProgress; 501 – PassFailPass; 502 – PassFailFail; 503 – CreditByExam; 504 – TransferNoGrade; 505 – Incomplete; 506 – WithdrewNoPenalty; 507 – WithdrewPassing; 509 – WithdrewFailing; 510 – HonorsGrade; 511 – AuditedCourse; 512 – Exempted; 513 – NotYetReported; 514 – IncompleteNotResolvedFail; 530 – OtherPassGrade; 531 – OtherFailGrade.*				
CourseNarrativeExplanationGrade	Optional	The narrative of the grade awarded to a student in an academic course in those cases where a course does not receive a letter or numeric grade included in the grading scale of the Course Academic Grade Qualifier.	Not Recommended	minOcc 0 maxOcc 1 minLength 1 maxLength 200
CourseRepeatCode	Optional	Indicates that an academic course has been repeated by a student and how that repeat is to be computed in the student's academic grade average.	Recommended	minOcc 0 maxOcc 1 **Enumerations:** RepeatCounted RepeatNotCounted ReplacementCounted ReplacedNotCounted RepeatOtherInstitution NotCountedOther
Comment: *If the sending school has no policy on how to treat repeated courses, then this data element can be ignored by the sending school. Likewise, if the receiving school has no policy or has a policy to ignore repeat calculations, then it can also be ignored. But if the sending school has such a policy, then this is the place to indicate that policy. For example, if the student previously took the same course, received a failing grade and has now completed this course with a passing grade, then the appropriate value might be "ReplacementCounted". Likewise, if this is the first attempt of the course, then this value might be "RepeatNotCounted".*				

Tag Name	Schema Use	Description	Recommended Use	Format
CourseCIPCode	Optional Choice	The Classification of Instructional Programs (CIP) code to describe the area of study for the course.	Optional choice	minOcc 0 maxOcc 1 minLength 1 maxLength 10
Comment: *Although this code set created and approved by the US Department of Education's National Center for Education Statistics, is for academic programs, it is frequently used to describe the content of an academic course. See http://nces.ed.gov/pubs2002/cip2000/*				
CourseCSISCode	Optional Choice	The Statistics Canada College Student Information System (CSIS) code to describe the area of study for the course.	Optional choice	minOcc 0 maxOcc 1 minLength 1 maxLength 10
CourseUSISCode	Optional Choice	The Statistics Canada University Student Information System (USIS) code to describe the area of study for the course.	Optional choice	minOcc 0 maxOcc 1 minLength 1 maxLength 10
Comment: *The two code sets immediately above were created to describe academic programs at Canadian postsecondary schools. As with the CIP code above, they can also be used to describe the content of a course at a Canadian postsecondary school.*				
CourseNCESCode	Optional Choice	The code set developed (or being developed by the United States Department of Education's National Center for Education Statistics)	Not Recommended	minOcc 0 maxOcc 1 minLength 1 maxLength 10
CourseSCEDCode	Optional Choice	The School Codes for the Exchange of Data (SCED) code set being developed for the United States Department of Education's National Center for Education Statistics to describe the content and level of a course	Not Recommended	minOcc 0 maxOcc 1 minLength 12 maxLength 12
Comment: *The SCED is a code set to describe the content of a high school course.*				

Tag Name	Schema Use	Description	Recommended Use	Format
CourseSubjectAreaCode	Optional Choice	This set of code values is derived from the first two digits of the CourseSCEDCode above.	Optional (use one)	minOcc 0 maxOcc 1 **Enumerations:** EnglishLanguageLiterature Mathematics LifePhysicalSciences SocialSciencesHistory FinePerformingArts ForeignLanguageLiterature ReligiousEducationTheology PhysicalHealthSafetyEducation MilitaryScience ComputerInformationSciences CommunicationsAudioVisualTechnology BusinessMarketing Manufacturing HealthCareSciences PublicProtectiveGovernmentService HospitalityTourism ArchitectureConstruction AgriculturefoodNaturalResources HumanServices TransportationDistributionLogistics EngineeringTechnology Miscellaneous SpecialExceptionalEducationServices
Comment: *This is a code set that is based on the first two digits of the Course SCED Code above. The SCED Code is maintained by the US Department of Education's National Center for Education Statistics (NCES). If it is updated in the future, then PESC will keep this code set in synch with the first two digits of the SCED Code.*				
CourseQualityPointsEarned	Optional	The numerical value assigned to a letter grade to provide a basis of quantitative determination of an average.	Recommended	minOcc 0 maxOcc 1 xs:decimal
Comment: *For example, if the student earned a grade of B in the course, and if the grade of B is worth 3 grade points, and if this course was worth 1 semester credit, then the value of this data element is "3". Likewise, for a course that is worth 0.5 semester credits, a grade of B would be worth "1.5" CourseQualityPointsEarned.*				

Tag Name	Schema Use	Description	Recommended Use	Format
CourseLevel	Optional	The level of work demonstrated by successful completion of the academic course being described	Recommended	minOcc 0 maxOcc 1 **Enumerations:** Accelerated AdultBasic AdvancedPlacement Basic InternationalBaccalaureate CollegeLevel CollegePreparatory Dual GiftedTalented GraduateProfessional Honors LowerDivision NonAcademic Remedial SpecialEducation TechnicalPreparatory UpperDivision Vocational
CourseGPAApplicabilityCode	Optional	An indicator of whether or not this course being described is included in the computation of the student's Grade Point Average, and if so, if it weighted differently from regular courses.	Recommended	minOcc 0 maxOcc 1 **Enumerations:** Applicable NotApplicable Weighted
CourseSubjectAbbreviation	Optional	The alphabetic abbreviation of the academic department or discipline offering the course. It is one part of the total course identifier.	Recommended	minOcc 0 maxOcc 1 minLength 1 maxLength 10
Comment: *As with all recommended data elements, if the sending school does not use alphabetic abbreviations as part of the course numbering system, then this data element would not exist and would not be included. However, if is important to include the complete identifier to identify the course in the combination of CourseSubjectAbbreviation and CourseNumber, since both are alphanumeric fields.*				
CourseNumber	Optional	The official reference number portion of a course identifier. This number frequently designates the level of the course as well as the level of the student expected to enroll in the course	Recommended	minOcc 0 maxOcc 1 minLength 1 maxLength 15
Comment: *As with all recommended data elements, if the sending school does not use numbers as part of the course numbering system, then this data element would not exist and would not be included.*				
CourseSectionNumber	Optional	The number assigned to differentiate among distinct occurrences of courses that have the same course abbreviation and number but are considered to be different courses.	Optional	minOcc 0 maxOcc 1 minLength 1 maxLength 10
Comment: *If course section number is used, it should probably be further explained in a note. If it only means, for example, that the course was taught at 9 am instead of 8 am, then it should probably not be included.*				

Tag Name	Schema Use	Description	Recommended Use	Format
OriginalCourseID	Optional	The course ID as it was listed when the grade was earned (e.g., before a system conversion) to show consistency between present transcripts and older ones.	Recommended	minOcc 0 maxOcc 1 minLength 1 maxLength 30
Comment: *The original course ID data element contains the entire course number. If it has an alpha prefix and a number, then both these parts of the course identifier would be placed in this one data element.*				
AgencyCourseID	Optional	The course ID that might have been assigned to this course by the state or other agency	Optional	minOcc 0 maxOcc 1 minLength 1 maxLength 30
CourseTitle	Optional	The name or title of the course taken by a student at an academic institution.	Recommended	minOcc 0 maxOcc 1 minLength 1 maxLength 60
CourseAddDate	Optional	The date a student was added to an academic course at a school.	Optional	minOcc 0 maxOcc 1 xs:date
Comment: *Most schools would not have this date readily available in the school's database. It would be of questionable value to the receiving postsecondary institution. The format of date is ccyy-mm-dd.*				
CourseDropDate	Optional	The date on which the student drops or withdraws from the course.	Optional	minOcc 0 maxOcc 1 xs:date
Comment: *If this date is readily available, it might be of some value to the receiving postsecondary institution. However, most receiving schools would probably ingnore this field.*				
CourseOverrideSchool	Optional	The school where the credit was earned if different from the Academic Session School	Conditional	minOcc 0 maxOcc 1
Comment: *This might be used when a full time student at one school is also taking one course at another community college or university during the session by some sort of prior institutional agreement. This complex data element will be expanded further on page 155 which follows in this Guide.*				
OverrideSchoolCourseNumber	Optional	The course ID as it was listed at the school where the credit was earned	Conditional	minOcc 0 maxOcc 1 minLength 1 maxLength 35
Comment: *CourseOverrideSchool and OverrideSchoolCourseNumber are normally used for situations like consortiums, concurrent enrollment or transfer courses, although transfer work is recommended to be reported in a separate session with an override school. If this alpha numeric field is used, then it should contain the entire course identifier (course abbreviation and course number).*				
CourseApplicability	Optional	The academic program to which this academic course applies toward graduation.	Not Recommended	minOcc 0 maxOcc 1 **Enumeration:** NotApplicable FirstProgram SecondProgram BothPrograms
CourseBeginDate	Optional	The official begin date for this course	Optional	minOcc 0 maxOcc 1 xs:date
Comment: *The format of date is ccyy-mm-dd.*				

Tag Name	Schema Use	Description	Recommended Use	Format
CourseEndDate	Optional	The official end date for this course	Optional	minOcc 0 maxOcc 1 xs:date
Comment: *CourseBeginDate and CourseEndDate are recommended when the dates differ from the session begin and end dates. The format for date is ccyy-mm-dd.*				
CourseInstructionSite	Optional	An indication of the type of location at which the course is taught.	Optional	minOcc 0 maxOcc 1 **Enumerations:** OnCampus OffCampus Extension StudyAbroad Correctional Millitary Telecommunication Auxiliary ClinicHospital
CourseInstructionSiteName	Optional	The name of the location at which the course is taught.	Optional	minOcc 0 maxOcc 1 minLength 1 maxLength 30
Requirement	Optional Repeatable	Curriculum requirements satisfied by successful completion of this course	Optional	minOcc 0 maxOcc ∞
Comment: *This complex data element will be expanded on page 160 which follows.*				
Attribute	Optional Repeatable	Attributes of this course which may require special handling by the receiving institution	Optional	minOcc 0 maxOcc ∞
Comment: *This complex data element will be expanded on page 162 which follows.*				
Proficiency	Optional Repeatable	Proficiency level signified by successful completion of this course	Optional	minOcc 0 maxOcc ∞
Comment: *This complex data element will be expanded on page 164 which follows.*				
Licensure	Optional Repeatable	Licensure requirements satisfied by successful completion of this course	Optional	minOcc 0 maxOcc ∞
Comment: *This complex data element will be expanded on page 166 which follows.*				
LanguageOfInstruction	Optional Repeatable	Language associated with one or more aspects of the course	Optional	minOcc 0 maxOcc ∞
Comment: *This optional data element would not be sent if the language is English and the sending school is in the United States. This complex data element will be expanded on page 167 which follows.*				
NoteMessage	Optional Repeatable	Additional information about the course	Not Recommended	minOcc 0 maxOcc ∞ minLength 1 maxLength 80
UserDefinedExtensions	Optional	Additional structured information. Requires mutually defined XML schema.	Optional	minOcc 0 maxOcc 1
Comment: *This is the appropriate place in the instance document to include courses taken at the sending school. It is also the appropriate place to include courses taken at another school if sufficient information is available to include data about the session at the other school.*				

Student.AcademicRecord.AcademicSession.Course (Continued)

Code illustration:


```
<Course>
    <CourseCreditBasis>Regular</CourseCreditBasis>
    <CourseCreditUnits>Semester</CourseCreditUnits>
    <CourseCreditLevel>LowerDivision</CourseCreditLevel>
    <CourseCreditValue>3</CourseCreditValue>
    <CourseCreditEarned>3</CourseCreditEarned>
    <CourseAcademicGradeScaleCode>25</CourseAcademicGradeScaleCode>
    <CourseAcademicGrade>A</CourseAcademicGrade>
    <CourseNarrativeExplanationGrade/>
    <CourseRepeatCode>RepeatCounted</CourseRepeatCode>
    <CourseCIPCode>54.0102</CourseCIPCode>
    <CourseQualityPointsEarned>4</CourseQualityPointsEarned>
    <CourseLevel>LowerDivision</CourseLevel>
    <CourseSubjectAbbreviation>HIS</CourseSubjectAbbreviation>
    <CourseNumber>201</CourseNumber>
    <CourseSectionNumber/>
    <OriginalCourseID>HIST201</OriginalCourseID>
    <AgencyCourseID>HIS020201</AgencyCourseID>
    <CourseTitle>United States History 1</CourseTitle>
    <CourseAddDate>2005-09-01</CourseAddDate>
    <CourseDropDate/>
    <CourseOverrideSchool>

    </CourseOverrideSchool>
    <OverrideSchoolCourseNumber/>
    <CourseApplicability/>
    <CourseBeginDate>2005-09-01</CourseBeginDate>
    <CourseEndDate>2005-12-07</CourseEndDate>
    <CourseInstructionSite>OnCampus</CourseInstructionSite>
    <CourseInstructionSiteName/>
    <Requirement>

    </Requirement>
    <Attribute>

    </Attribute>
    <Proficiency>

    </Proficiency>
    <Licensure>

    </Licensure>
    <LanguageOfInstruction>

    </LanguageOfInstruction>
    <NoteMessage/>
    <UserDefinedExtensions/>
</Course>
```

Student.AcademicRecord.AcademicSession.Course. CourseOverrideSchool

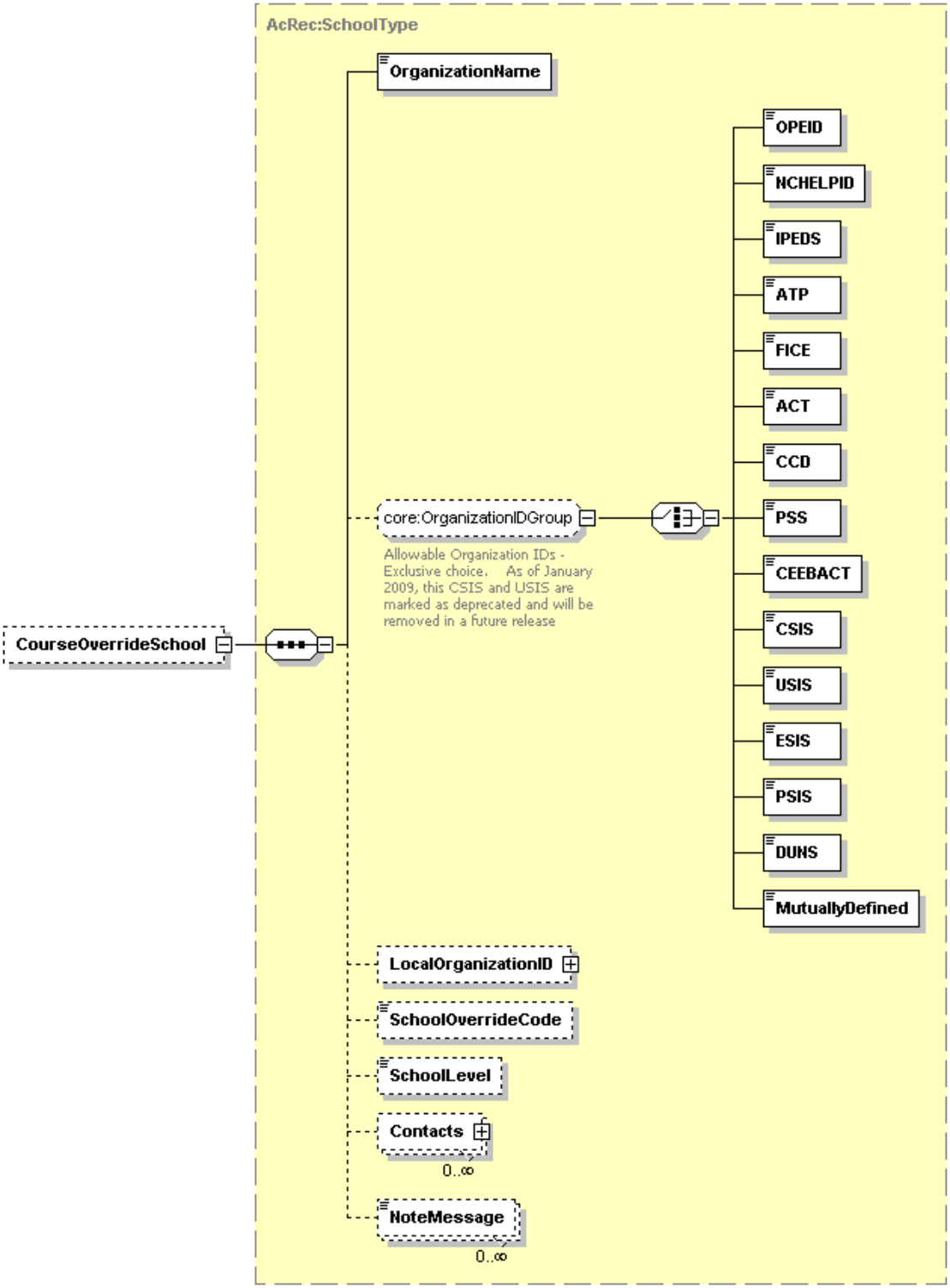

Tag Name	Schema Use	Description	Recommended Use	Format
OrganizationName	Required	Name of override school	Required	minOcc 1 maxOcc 1 minLength 1 maxLength 60
OPEID	Optional choice	The unique identifier assigned by the Office of Postsecondary Education for each data exchange partner.	Recommended (use one)	minOcc 0 maxOcc 1 minLength 3 maxLength 8
Comment: *The OPEID would be appropriate if the course were taken at a postsecondary institution.*				
NCHELPID	Optional choice	The unique identifier assigned by National Council on Higher Education Loan Programs for each data exchange partner.	Not Recommended	minOcc 0 maxOcc 1 minLength 3 maxLength 8
Comment: *The NCHELPID is not an appropriate code to describe a school that offers academic courses.*				
IPEDS	Optional choice	The unique identifier assigned by the National Center for Education Statistics for the Integrated Postsecondary Education Data System for each postsecondary data exchange partner.	Recommended (use one)	minOcc 0 maxOcc 1 minLength 6 maxLength 6
Comment: *The IPEDS code set is appropriate for indicating a postsecondary school that offers an academic course.*				
ATP	Optional choice	The unique identifier assigned for the Admissions Testing Program by the College Board for each postsecondary data exchange partner.	Recommended (use one)	minOcc 0 maxOcc 1 minLength 6 maxLength 6
Comment: *The ATP code set is appropriate for indicating a postsecondary school that offers an academic course.*				
FICE	Optional choice	The unique identifier assigned for the Federal Interagency Committee on Education by the US Department of Education's National Center for Education Statistics for each postsecondary data exchange partner	Recommended (use one)	minOcc 0 maxOcc 1 minLength 6 maxLength 6
Comment: *The FICE code set is appropriate for indicating a postsecondary school that offers an academic course. However, this code set has not been maintained since late in the last century, so it is not appropriate for newer schools.*				
ACT	Optional choice	The unique identifier assigned by the American College Testing or ACT for each postsecondary data exchange partner. See www.act.org.	Recommended (use one)	minOcc 0 maxOcc 1 minLength 4 maxLength 4
Comment: *The ACT code set is appropriate for indicating a postsecondary school that offers an academic course.*				
CCD	Optional choice	The unique identifier assigned by the US Department of Education's National Center for Education Statistics as the Common Core of Data for each K12 data exchange partner.	Not Recommended	minOcc 0 maxOcc 1 minLength 12 maxLength 12
Comment: *The CCD code set is only appropriate for indicating a high school that offers academic courses.*				
PSS	Optional choice	The unique identifier assigned by the US Department of Education's National Center for Education Statistics as the Common Core of Data for each private K12 school in the US.	Not Recommended	minOcc 0 maxOcc 1 minLength 8 maxLength 8
Comment: *The PSS code set is only appropriate for indicating a private secondary school that offers academic courses.*				

Tag Name	Schema Use	Description	Recommended Use	Format
CEEBACT	Optional choice	The unique identifier assigned by the College Entrance Examining Board and ACT for each K12 data exchange partner.	Not Recommended	minOcc 0 maxOcc 1 minLength 6 maxLength 6
Comment: *The CEEBACT code set is only appropriate for indicating a high school that offers academic courses..*				
CSIS	Optional choice	The unique identifier assigned by the Statistics Canada Canadian College Student Information System for each data exchange partner	Not Recommended	minOcc 0 maxOcc 1 minLength 6 maxLength 6
USIS	Optional choice	The unique identifier assigned by the Statistics Canada University Student Information System for each data exchange partner	Not Recommended	minOcc 0 maxOcc 1 minLength 6 maxLength 6
ESIS	Optional choice	The unique identifier assigned by the Statistics Canada Enhanced Student Information System for each data exchange partner.	Not Recommended	minOcc 0 maxOcc 1 minLength 8 maxLength 8
Comment: *The three code sets immediately above (CSIS, USIS, ESIS) are no longer used and have been replaced by the newer PSIS code set for postsecondary schools in Canada included below.*				
PSIS	Optional choice	The unique identifier assigned by the Statistics Canada Postsecondary Student Information System for each data exchange partner.	Recommended	minOcc 0 maxOcc 1 minLength 8 maxLength 8
Comment: *The PSIS code set is appropriate for postsecondary schools in Canada.*				
DUNS	Optional choice	Data Universal Numbering System (DUNS), unique nine character company identification number issued by Dun and Bradstreet Corporation.	Not Recommended	minOcc 0 maxOcc 1 minLength 9 maxLength 9
Comment: *The DUNS code would not normally be an appropriate code set to use to indicate an academic institution.*				
MutuallyDefined	Optional choice	This code set could be used by a selected set of trading partners if none of the other above code sets is appropriate.	Optional choice	minOcc 0 maxOcc 1 minLength 1 maxLength 60
Comment: *If a course is being or was taken by a school or agency that does not have a valid code in one of the other above code sets, and if that code and code set is recognized by the recipient, then this code set might be used by a set of limited exchange partners.*				
Comment: *Although it is not necessary to send one of the above 12 codes, if you choose to do so, then choose one of the noted appropriate codes.*				
LocalOrganizationID	Optional	A code set typically used by a state, province or region to further identify the school whose record is beng sent	Optional	minOcc 0 maxOcc 1
Comment: *This complex data element will be expanded on page 159 which follows.*				
SchoolOverrideCode	Optional	The source of the academic credit **if not awarded by the home or parent institution**. *Institutional* - Institutional Agreement *Multicampus* - Multiple Campus Course Offering *Transfer* - Transfer Credit *StudyAbroad* - Study Abroad *Coop* - Cooperative Program *Reciprocal* - Reciprocal Exchange *Internship* - Internship	Recommended	minOcc 0 maxOcc 1 **Enumerations:** Institutional Multicampus Transfer StudyAbroad Coop Reciprocal Internship

Tag Name	Schema Use	Description	Recommended Use	Format
SchoolLevel	Optional	Indicates level of Override School	Recommended	minOcc 0 maxOcc 1 **Enumerations:** Elementary Secondary Postsecondary
Contacts	Optional Repeatable	Contact info at Override School	Optional	minOcc 0 maxOcc ∞
Comment: *The sending school would not normally have any information about contacts at the override school so this would not normally be included with the College Transcript. If it is to be included, then this complex data element was expanded on page 78 earlier in this Guide.*				
NoteMessage	Optional Repeatable	Additional information about the Override School	Not Recommended	minOcc 0 maxOcc ∞ minLength 1 maxLength 80
Comment: *This entire complex data element would only be sent if this one course (or possibly two courses) were taken along with other courses in the same session at the regular school, but these courses were taken at another nearby school, or possibly at another school's on-line process.*				

Code illustration:

```
<School>
    <OrganizationName>Local Community College</OrganizationName>
    <FICE>123456</FICE>
    <LocalOrganizationID>

    </LocalOrganizationID>
    <SchoolOverrideCode>Transfer</SchoolOverrideCode>
    <SchoolLevel>Postsecondary</SchoolLevel>
    <Contacts/>
    <Note/Message/>
</School>
```

Student.AcademicRecord.AcademicSession.Course. CourseOverrideSchool.LocalOrganizationID

Note: Although the complex data element LocalOrganizationID is an optional data element, if you choose to send LocalOrganizationID, then you must send both LocalOrganizationIDCode and also LocalOrganizationIDQualifier.

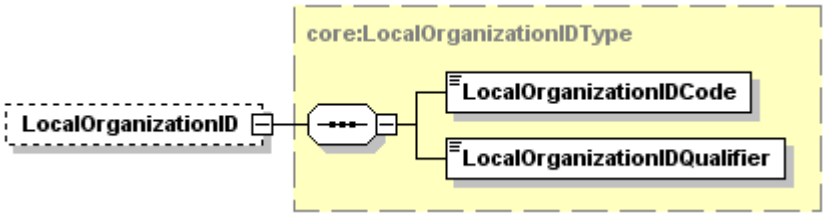

Tag Name	Schema Use	Description	Recommended Use	Format
LocalOrganizationIDCode	Required	The code assigned for the school by the state, province or other mutually defined agency specified in the LocalOrganizationIDQualifier that follows.	Required	minOcc 1 maxOcc 1 minLength 1 maxLength 35
Comment: *This is a required data element only if the LocalOrganizationID data element is sent. This is typically the administrative school code assigned by a state or province to specifically identify the school in that state or province.*				
LocalOrganizationIDQualifier	Required	This is the state, province or other mutually definded agency that assigned the LocalOrganizationID Code above.	Required	minOcc 1 maxOcc 1 See Appendix A.
Comment: *This is a required data element only if the LocalOrganizationID data element is sent. This is typically the state or province that assigned the code to specifically identify the receiving school in that state.*				

Code illustration:

```
<LocalOrganizationID>
    <LocalOrganizationIDCode>340005501</LocalOrganizationIDCode>
    <LocalOrganizationIDQualifier>FL</LocalOrganizationIDQualifier>
</LocalOrganizationID>
```

Student.AcademicRecord.AcademicSession.Course.Requirement

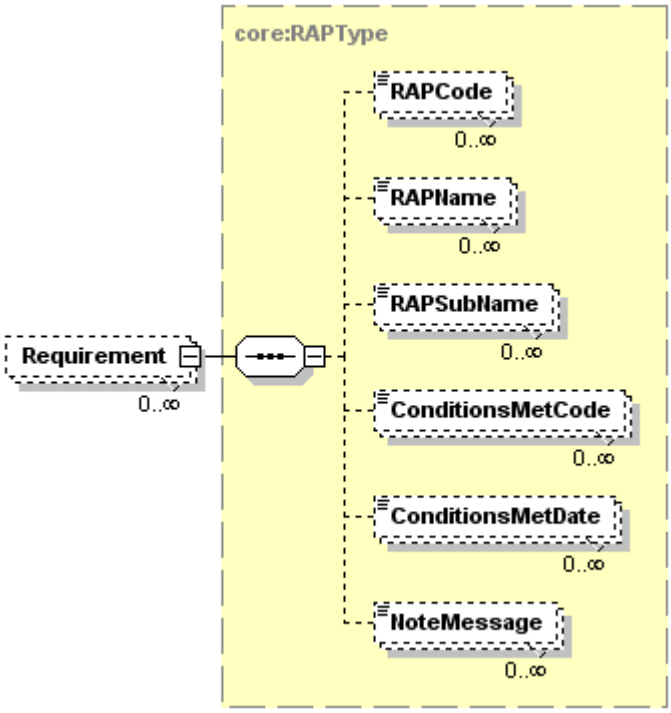

Tag Name	Schema Use	Description	Recommended Use	Format
RAPCode	Optional Repeatable	Requirement demonstrated or earned by completion of this course, in addition to or as part of an academic award.	Recommended	minOcc 0 maxOcc ∞ minLength 1 maxLength 3
Comment: *If this data element is to be used effectively, a code set should be created by a state or region. An example is given below in the Code Illustration. If not, then User Defined Extensions would be an alternate method of including this information.*				
RAPName	Optional Repeatable	Literal name of requirement	Recommended	minOcc 0 maxOcc ∞ minLength 1 maxLength 60
RAPSubName	Optional Repeatable	Literal name of subsection of requirement	Optional	minOcc 0 maxOcc ∞ minLength 1 maxLength 60
ConditionsMetCode	Optional Repeatable	Indicates whether and how conditions for the requirement have been attained.	Recommended	minOcc 0 maxOcc ∞ **Enumerations:** Yes No Conditional MutuallyDefined
ConditionsMetDate	Optional Repeatable	Date requirement was met.	Optional	minOcc 0 maxOcc ∞ xs:date
Comment: *The format of date is ccyy-mm-dd.*				

Tag Name	Schema Use	Description	Recommended Use	Format
NoteMessage	Optional Repeatable	Additional information about the requirement	Not Recommended	minOcc 0 maxOcc ∞ minLength 1 maxLength 80
Comment: *For example, the Requirement part of the course could be used to indicate that completion of this course satisfies a computer literacy requirement for graduation or a Community Service requirement. It could also be use to indicate that this course meets a requirement for admission to the state university system.*				

Code illustration:

```
<Requirement>
    <RAPCode>9TX</RAPCode>
    <RAPName>TXDegReq</RAPName>
    <RAPSubName>UT Austin Writing Component</RAPSubName>
    <ConditionsMetCode>Yes</ConditionsMetCode>
    <ConditionsMetDate>2002-08-13</ConditionsMetDate>
    <NoteMessage/>
</Requirement>
```

Student.AcademicRecord.AcademicSession.Course.Attribute

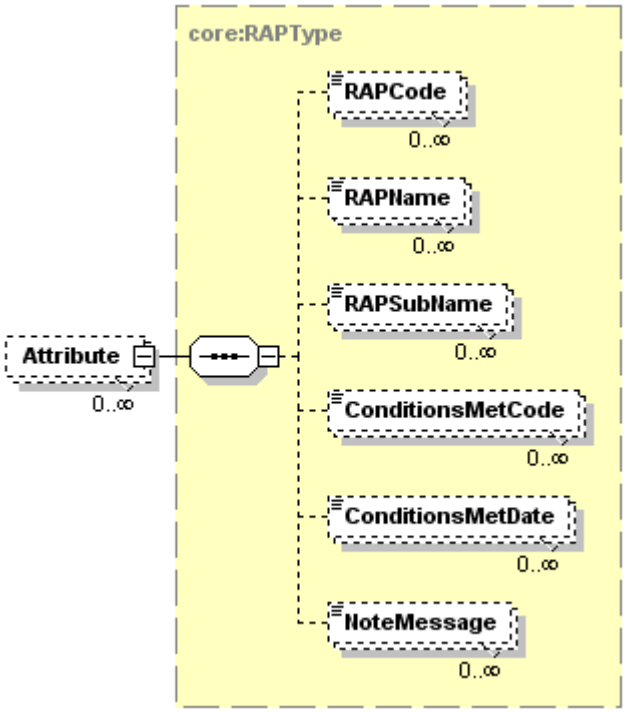

Tag Name	Schema Use	Description	Recommended Use	Format
RAPCode	Optional Repeatable	Attribute demonstrated or earned by completion of this course, in addition to or as part of an academic award.	Recommended	minOcc 0 maxOcc ∞ minLength 1 maxLength 3
Comment: *If this data element is to be used effectively, a code set should be created by a state or region. An example is given below in the Code Illustration. If not, then User Defined Extensions would be an alternate method of including this information.*				
RAPName	Optional Repeatable	Literal name of attribute	Recommended	minOcc 0 maxOcc ∞ minLength 1 maxLength 60
RAPSubName	Optional Repeatable	Literal name of subsection of attribute	Optional	minOcc 0 maxOcc ∞ minLength 1 maxLength 60
ConditionsMetCode	Optional Repeatable	Indicates whether and how conditions for certification have been attained.	Recommended	minOcc 0 maxOcc ∞ **Enumeration:** Yes No Conditional MutuallyDefined
ConditionsMetDate	Optional Repeatable	Date of meeting the attribute	Optional	minOcc 0 maxOcc ∞ xs: date
Comment: *The format for date is ccyy-mm-dd.*				

Tag Name	Schema Use	Description	Recommended Use	Format
NoteMessage	Optional Repeatable	Additional information about the attribute	Not Recommended	minOcc 0 maxOcc ∞ minLength 1 maxLength 80
Comment: *For example, the Attribute part of the course could be used to indicate that the course was taught by a university professor, or it was taught in a hands-on computer lab, etc. It would normally only have significant meaning when used by all participating schools within a state or region.*				

Code illustration:

```
<Attribute>
    <RAPCode>9TX</RAPCode>
    <RAPName>TXCORECURR</RAPName>
    <RAPSubName>020Mathematics (I)</RAPSubName>
    <ConditionsMetCode>Yes</ConditionsMetCode>
    <ConditionsMetDate>1997-03-01</ConditionsMetDate>
    <NoteMessage/>
</Attribute>
```

Student.AcademicRecord.AcademicSession.Course.Proficiency

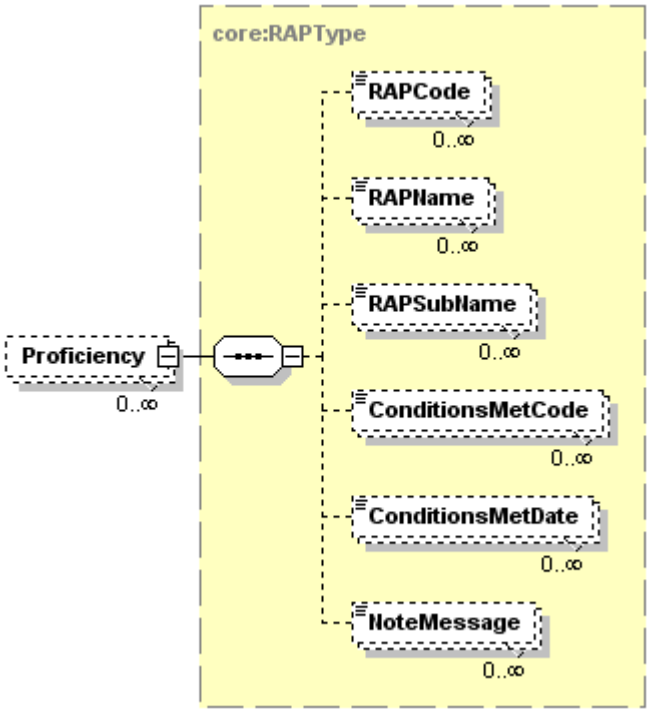

Tag Name	Schema Use	Description	Recommended Use	Format
RAPCode	Optional Repeatable	Proficiency demonstrated or earned by completion of this course, in addition to or as part of an academic award.	Recommended	minOcc 0 maxOcc ∞ minLength 1 maxLength 3
Comment: *If this data element is to be used effectively, a code set should be created by a state or region. An example is given below in the Code Illustration. If not, then User Defined Extensions would be an alternate method of including this information.*				
RAPName	Optional Repeatable	Literal name of proficiency	Recommended	minOcc 0 maxOcc ∞ minLength 1 maxLength 60
RAPSubName	Optional Repeatable	Literal name of subsection of proficiency	Optional	minOcc 0 maxOcc ∞ minLength 1 maxLength 60
ConditionsMetCode	Optional Repeatable	Indicates whether and how conditions for certification have been attained.	Recommended	minOcc 0 maxOcc ∞ **Enumerations:** Yes No Conditional MutuallyDefined
ConditionsMetDate	Optional Repeatable	Date of proficiency	Optional	minOcc 0 maxOcc ∞ xs:date
Comment: *The format for date is ccyy-mm-dd.*				

Tag Name	Schema Use	Description	Recommended Use	Format
NoteMessage	Optional Repeatable	Additional information about the proficiency	Not Recommended	minOcc 0 maxOcc ∞ minLength 1 maxLength 80
Comment: *For example, the Proficiency part of the course could be used to indicate successful completion of this course demonstrates a school graduation requirement for computer competency or English proficiency.*				

Code illustration:

```
<Proficiency>
        <RAPCode>9TX</RAPCode>
        <RAPName>Computer Literacy Proficiency</RAPName>
        <RAPSubName>CSPROF - ComputerSkillsProficiency</RAPSubName>
        <ConditionsMetCode>Yes</ConditionsMetCode>
        <ConditionsMetDate>2004-10-23</ConditionsMetDate>
        <NoteMessage>Students learn MS Word, PPT and Web Search in this course.</NoteMessage>
    </Proficiency>
```

Student.AcademicRecord.AcademicSession.Course.Licensure

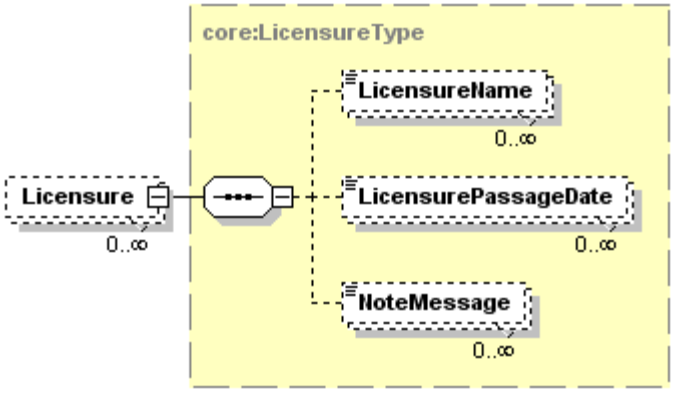

Tag Name	Schema Use	Description	Recommended Use	Format
LicensureName	Optional Repeatable	Free-form name of license or certification.	Recommended	minOcc 0 maxOcc ∞ minLength 1 maxLength 60
LicensurePassageDate	Optional Repeatable	Date of licensure passage	Optional	minOcc 0 maxOcc ∞ xs:date
Comment: *The format for date is ccyy-mm-dd.*				
NoteMessage	Optional Repeatable	Additional information about the licensure	Not Recommended	minOcc 0 maxOcc ∞ minLength 1 maxLength 80

Code illustration:

```
<Licensure>
    <LicensureName>Occupational Therapy Assistant</LicensureName>
    <LicensurePassageDate>2004-05-20</LicensurePassageDate>
    <NoteMessage/>
</Licensure>
```

Student.AcademicRecord.AcademicSession.Course. LanguageOfInstruction

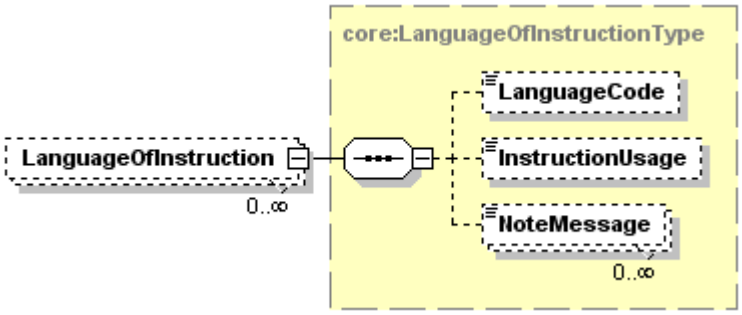

Tag Name	Schema Use	Description	Recommended Use	Format
LanguageCode	Optional	Code indicating the language being used, using ISO 639-2 code (Alpha-3) set. These codes are available at http://www.loc.gov/standards/iso639-2/	Recommended	minOcc 0 maxOcc 1 See Language Codes in Appendix C1 or C2.
InstructionUsage	Optional	The use of the language in the context of instruction. *Instruction* - Language of Instruction *Examination* - Language of Examination *WrittenExam* - Language in which Examination is written	Recommended	minOcc 0 maxOcc 1 **Enumeration:** Instruction Examination WrittenExam
NoteMessage	Optional Repeatable	Additional information about the language of instruction	Not Recommended	minOcc 0 maxOcc ∞ minLength 1 maxLength 80
Comment: *This is an optional data element. If it is not included, it is assumed the language of instruction was English if the school sending the record is in the United States.*				

Code illustration:

```
<LanguageOfInstruction>
    <LanguageCode>FRE</LanguageCode>
    <InstructionUsage>Instruction</InstructionUsage>
    <NoteMessage/>
</LanguageOfInstruction>
```

Student.AcademicRecord.AcademicSession.AcademicSummary

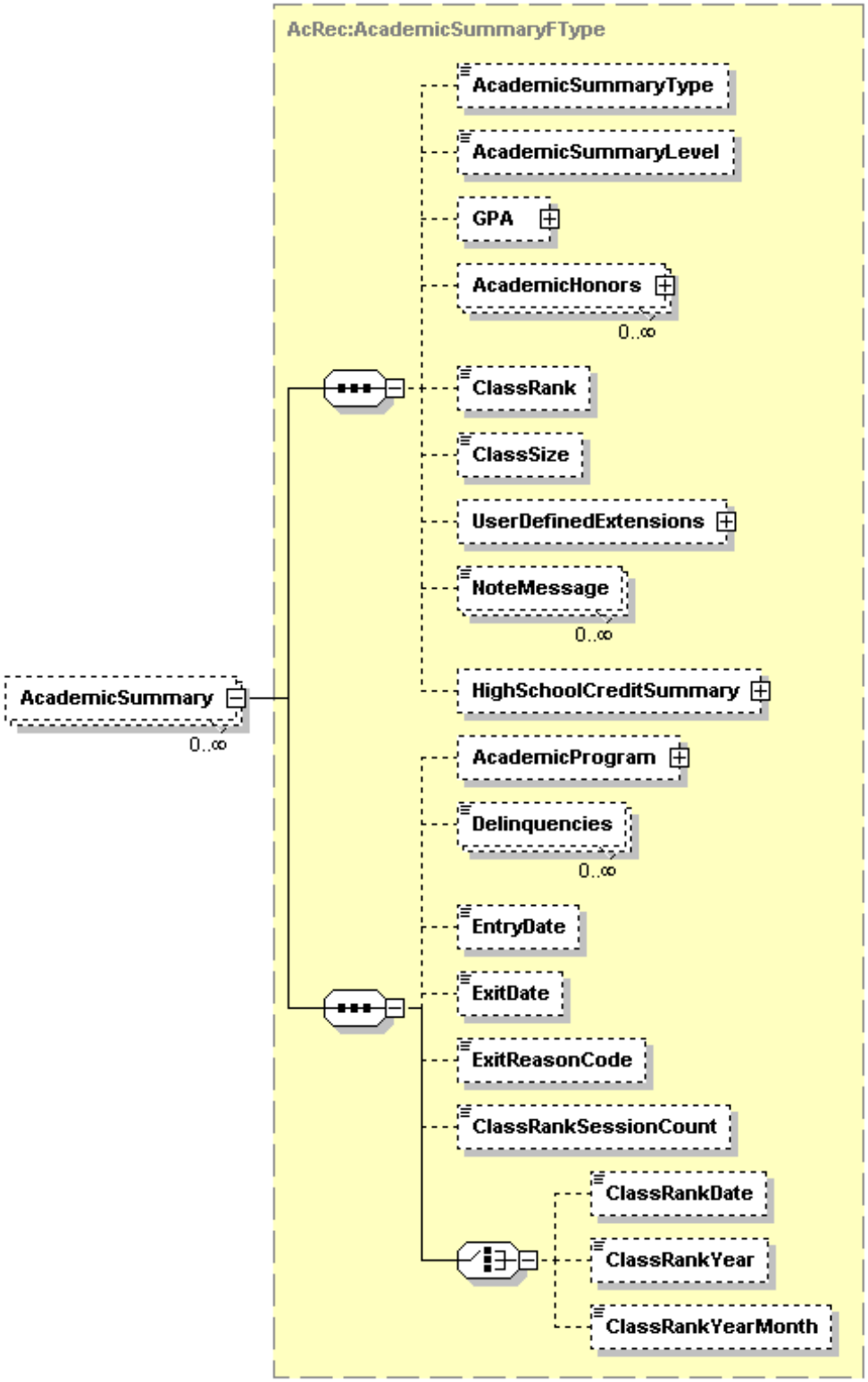

Student.AcademicRecord.AcademicSession.AcademicSummary (Continued)

Tag Name	Schema Use	Description	Recommended Use	Format
AcademicSummaryType	Optional	Summary Type is an indication of what is being summarized over what period of time *All* - Summary of all courses regardless of institution *SenderOnly* - Summary of all courses at sending institution (or recorded as if they were taken at the sending institution) *TransferOnly* - Summary of transfer work (courses taken at other than the sending institution) *AllNotRepeated* - Summary of all courses except for repeated or forgiven courses/credits *SenderNotRepeated* - Summary of all courses at sending institution except for repeated or forgiven courses/credits *TransferNotRepeated* - Summary of transfer work except for repeated or forgiven courses/credits *AcademicRenewal* - Subset of forgiven courses *CarryoverCredit* - Summary from offline records and used as the intitial point for cumulatives and averages *DegreeApplicable* - Summary of courses that apply to degree *NonDegreeApplicable* - Summary of courses that do not apply toward degree *ConvertedFrom* - Summary of credits before an institutional term-basis conversion, such as from quarters to semesters *ConvertedTo* - Summary of credits after an institutional term-basis conversion, such as from quarters to semesters *UserDefined* - see NoteMessage *Weighted* – Summary that gives higher value to specific courses taken by a student, such as honors courses, International Baccalaur-eate, Advanced Place-ment, high school /college dual enrollment. *NonWeighted* – Summary that does not give additional value to courses, regardless of special characteristics of the courses. For example, if the grading scale is from 0 to 4.00, then it is not possible to have a summary higher than 4.00. *Cumulative* – Summary that includes totals of all courses taken up to a point in time.	Recommended	minOcc 0 maxOcc 1 **Enumerations:** All SenderOnly TransferOnly AllNotRepeated SenderNotRepeated TransferNotRepeated AcademicRenewal CarryoverCredit DegreeApplicable NonDegreeApplicable ConvertedFrom ConvertedTo UserDefined Weighted NonWeighted Cumulative

Tag Name	Schema Use	Description	Recommended Use	Format
AcademicSummaryLevel	Optional	The level of credit associated with the credit hours earned for the courses.	Optional	minOcc 0 maxOcc 1 **Enumeration:** Undergraduate LowerDivision UpperDivision Vocational TechnicalPreparatory Graduate Professional Dual DualGraduateUndergraduate GraduateProfessional
GPA	Optional	GPA for this academic summary	Recommended	minOcc 0 maxOcc 1
Comment: *This complex data element will be expanded on page 174 which follows.*				
AcademicHonors	Optional Repeatable	Honors associated with this academic summary	Optional	minOcc 0 maxOcc ∞
Comment: *This would typically be where items like Dean's List at the end of a session are listed. This complex data element will be expanded on page 177 which follows.*				
ClassRank	Optional	The student's class rank relative to other students in their academic cohort (e.g. class).	Not Recommended	minOcc 0 maxOcc 1 minInclusive 1 maxInclusive 9999 totalDigits 4
Comment: *The Workgroup that developed this PESC XML College Transcript Schema does not recommend inclusion of Class Rank in the College Transcript. However, if it is included, it is recommended that this is* ***not*** *the most appropriate place for inclusion of the student's overall rank in class. If it is included in the Schema, it is recommended that a more appropriate place be under Student.AcademicRecord.AcademicSummary. The student ranking the highest in the class would have a rank of "1".*				
ClassSize	Optional	The numeric size of the academic cohort (e.g., class).	Not Recommended	minOcc 0 maxOcc 1 minInclusive 1 maxInclusive 9999 totalDigits 4
Comment: *If there were 753 students in the student's class and if they were ranked by the school, then this value would be "753".*				
UserDefinedExtensions	Optional	A mini schema containing formatted data	Optional	minOcc 0 maxOcc 1
Comment: *UserDefinedExtensions are provided so schools that have previously agreed upon the format of the schema can exchange additional data about the summary that is not provided for in the original schema. These schools would typically be from the same state or region or utilize the same vendor. Schools not in the selected group of trading partners would simply ignore the UserDefinedExtensions.*				
NoteMessage	Optional Repeatable	Additional information about the academic summary for this academic session	Not Recommended	minOcc 0 maxOcc ∞ minLength 1 maxLength 80
Comment: *If the class rank and class size are included in the transcript, then this note message could be used to indicate the cohort and/or date of the ranking.*				
HighSchoolCreditSummary	Optional	Information about high school credits taken for selected curriculum areas.	Not Recommended	minOcc 0 maxOcc 1
Comment: *This will not be included in a College Transcript.*				

Tag Name	Schema Use	Description	Recommended Use	Format
AcademicProgram	Optional	Academic program (major) associated with this academic summary	Not Recommended	minOcc 0 maxOcc 1
Comment: *It would be quite unusual to see this included on a college transcript at this point in the schema. This complex data element will be expanded on page 178 which follows.*				
Comment: *Information about the academic program is not normally included on a transcript for each session..*				
Delinquencies	Optional Repeatable	The academic standing of the student at the end of this session. *ExclusionAcademic* – Student was typically previously suspended for hours or GPA and is no longer eligible to reenroll or to apply for readmission *ExclusionDiscipline* - Student was typically previously suspended for disciplinary reasones and is no longer eligible to reenroll or to apply for readmission *GoodStanding* - Student was in good standing *ProbationGPA* - Student was on academic probation (because of low GPA) *ProbationHours* - Student was on academic probation (deficiency in credit hours) *SuspensionGPA* - Student was on academic suspension (because of low GPA) *SuspensionHours* - Student was on academic suspension (deficiency in credit hours) *ProbationDiscipline* - Student was on disciplinary probation. Not recommended to be included on the transcript *SuspensionDiscipline* - Student was on disciplinary suspension. Not recommended to be included on the transcript *Unknown* *Other*	Optional	minOcc 0 maxOcc ∞ **Enumeration:** ExclusionAcademic ExclusionDiscipline GoodStanding ProbationGPA ProbationHours SuspensionGPA SuspensionHours ProbationDiscipline SuspensionDiscipline Unknown Other
EntryDate	Optional	The date on which the student officially enrolled for this session	Optional	minOcc 0 maxOcc 1 xs:date
Comment: *This data eliminate would rarely be seen on a College Transcript.*				
ExitDate	Optional	The date on which the student officially withdrew or graduated.	Optional	minOcc 0 maxOcc 1 xs:date
Comment: *This date would typically be the date of graduation for students who did graduate this session. If the student did not graduate, it would be the last date of known enrollment. The date format is ccyy-mm-dd. It would not typically be included on a postsecondary transcript. In rare cases, it might be included for the final session the student attended at that school.*				
ExitReasonCode	Optional	The reason that a high school student left the school.	Not Recommended	minOcc 0 maxOcc 1
Comment: *This code would typically be used for a high school transcript, but would never be used for a College Transcript.*				

Tag Name	Schema Use	Description	Recommended Use	Format
ClassRankSessionCount	Optional	The number of sessions of enrollment included when the student's class was ranked by GPA.	Not Recommended	minOcc 0 maxOcc 1 Format is a positive integer up to a max length of 4.
Comment: *Since College Transcripts do not include class rank, this data element would not appear in a College Transcript.*				
ClassRankDate	Optional Choice	The date on which the student's class rank was computed	Not Recommended	minOcc 0 maxOcc 1 xs:date
Comment: *Since College Transcripts do not include class rank, this data element would not appear in a College Transcript.*				
ClassRankYear	Optional Choice	The year in which the student's class rank was computed	Not Recommended	minOcc 0 maxOcc 1 g:Year with format ccyy
Comment: *Since College Transcripts do not include class rank, this data element would not appear in a College Transcript.*				
ClassRankYearMonth	Optional Choice	The year and month in which the student's class rank was computed	Not Recommended	minOcc 0 maxOcc 1 g:YearMonth with format ccyy-mm
Comment: *Since College Transcripts do not include class rank, this data element would not appear in a College Transcript.*				

Student.AcademicRecord.AcademicSession.AcademicSummary (Continued)

Code illustration:

```
<AcademicSummary>
    <AcademicSummaryType>All</AcademicSummaryType>
    <AcademicSummaryLevel/>
    <GPA>

    </GPA>
    <AcademicHonors>

    </AcademicHonors>
    <ClassRank>43</ClassRank>
    <ClassSize>849</ClassSize>
    <UserDefinedExtensions/>
    <NoteMessage/>
    <HighSchoolCreditSummary/>
    <AcademicProgram>

    </AcademicProgram>
    <Delinquencies>GoodStanding</Delinquencies>
    <EntryDate/>
    <ExitDate>2005-05-13</ExitDate>
    <ExitReasonCode/>
    <ClassRankSessionCount/>
    <ClassRankDate/>
</AcademicSummary>
```

Student.AcademicRecord.AcademicSession.AcademicSummary.GPA

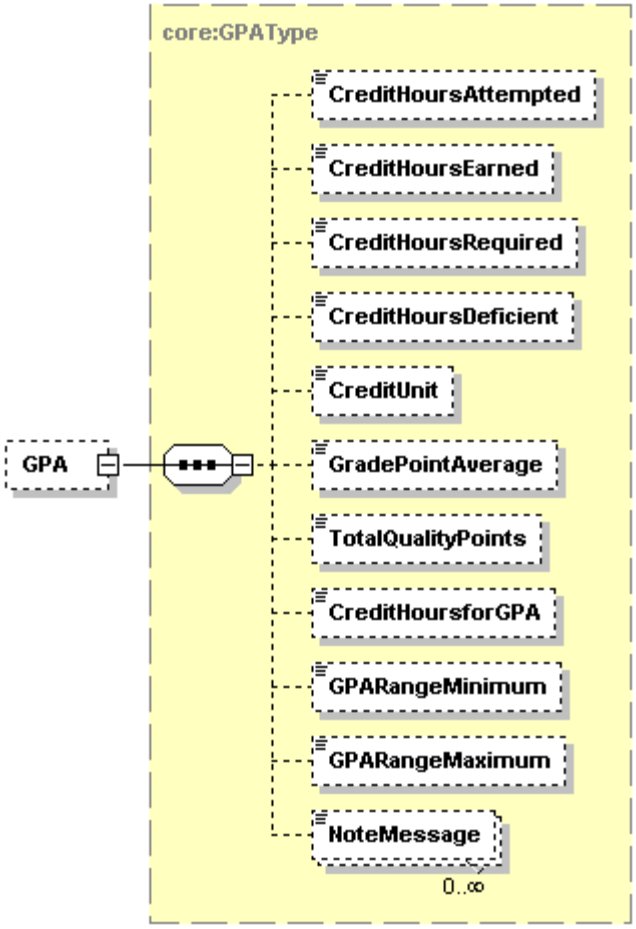

Tag Name	Schema Use	Description	Recommended Use	Format
CreditHoursAttempted	Optional	The total value of credit hours attempted whether or not included in the hours for GPA or hours earned.	Recommended	minOcc 0 maxOcc 1 xs:decimal
Comment: *This would also include the credit value of a course from which the student withdrew, if it appears on the transcript. So if a student had enrolled in 10 semester credits which are all included in this session and appear on the transcript, and had passed 5 semester credits and withdrawn from 5 credits, then the value of this field would be "10". If the student had enrolled for 10.5 credits that are included in this session on the transcript, then the value of this field would be "10.5".*				
CreditHoursEarned	Optional	The total value of credit hours successfully completed or earned.	Recommended	minOcc 0 maxOcc 1 xs:decimal
Comment: *If the student had earned 5 semester credits and they all are included in this session on the transcript, then the value of this data element would be "5". If only 4.5 credits were earned, then the value would be "4.5".*				
CreditHoursRequired	Optional	The total value of credit hours required for an academic award	Not Recommended	minOcc 0 maxOcc 1 xs:decimal
Comment: *This would not normally appear on a College Transcript. For postsecondary school students, this information would be included in a Degree Audit document.*				
CreditHoursDeficient	Optional	The total value of credit hours the	Not	minOcc 0 maxOcc 1

Tag Name	Schema Use	Description	Recommended Use	Format
		student is lacking for an academic award.	Recommended	xs:decimal
Comment: *This would not normally appear on a College Transcript. For postsecondary school students, this information would be included in a Degree Audit document.*				
CreditUnit	Optional	The type of credit (unit, semester, or quarter) associated with the credit hours earned for the course.	Recommended	minOcc 0 maxOcc 1 **Enumerations:** NoCredit Quarter Semester Units ClockHours CarnegieUnits ContinuingEducationUnits Unreported Other
Comment: *In version 1.0.0 of the schema, there were several errors introduced in the enumerated values of CourseCreditUnits. They incorrectly were introduced into the schema with a trailing space. In this version, new values have been added without the trailing spaces. The values with the incorrect trailing spaces have been deprecated and will be deleted in a future release of the schema.*				
GradePointAverage	Optional	The value of the total quality points divided by the Credit Hours for Grade Point Average.	Recommended	minOcc 0 maxOcc 1 xs:decimal
Comment: *For example, if the student had enrolled for 10 semester credits, passed 8 semester credits with grades of B worth 3 quality points for each credit, and 2 semester credits with grades of F worth 0 quality points, then the calculation would be 24 quality points divided by 10 or a GPA of "2.4" or "2.40" or "2.400" depending on the policy of the sending school.*				
TotalQualityPoints	Optional	The total value of quality points used for the calculation of the Grade Point Average.	Recommended	minOcc 0 maxOcc 1 xs:decimal
Comment: *If a student earned all grades of B (worth 3 quality points for each semester credit) in 8.5 semester credits this session, then the value of this data element would be "25.5".*				
CreditHoursforGPA	Optional	The total value of credit hours used to calculate the Grade Point Average.	Recommended	minOcc 0 maxOcc 1 xs:decimal
Comment: *If a student earned grades of A (worth 4 quality points per unit) in 3 semester credits, grades of F (worth 0 quality points per unit) in 4 credits; and withdrew from 5 semester credits, then the total credit hours for GPA would be "7".*				
GPARangeMinimum	Optional	The minimum possible GPA	Recommended	minOcc 0 maxOcc 1 xs:decimal
Comment: *If the lowest possible grade is an F and a grade of F is valued at 0 quality points, then this value would be "0", or "0.0" or "0.00".*				
GPARangeMaximum	Optional	The maximum possible GPA	Recommended	minOcc 0 maxOcc 1 xs:decimal
Comment: *If the highest possible grade is an A and a grade of A is valued at 4 quality points, then this value would be "4" or "4.0" or "4.00", etc.*				
NoteMessage	Optional Repeatable	Additional information about the GPA	Not Recommended	minOcc 0 maxOcc ∞ minLength 1 maxLength 80
Comment: *The GPA included at this point in the Schema represents the GPA for this iteration of academic record for the academic session.*				

Student.AcademicRecord.AcademicSession.AcademicSummary.GPA (Continued)

Code illustration:

```
<GPA>
    <CreditHoursAttempted>4.5</CreditHoursAttempted>
    <CreditHoursEarned>4</CreditHoursEarned>
    <CreditHoursRequired/>
    <CreditHoursDeficient/>
    <CreditUnit>Semester</CreditUnit>
    <GradePointAverage>4.0</GradePointAverage>
    <TotalQualityPoints>16</TotalQualityPoints>
    <CreditHoursforGPA>4</CreditHoursforGPA>
    <NoteMessage/>
</GPA>
```

Student.AcademicRecord.AcademicSession.AcademicSummary. AcademicHonors

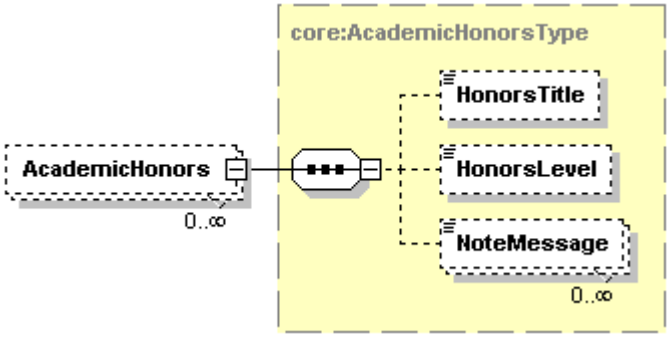

Tag Name	Schema Use	Description	Recommended Use	Format
HonorsTitle	Optional	The descriptive title for the honors received.	Recommended	minOcc 0 maxOcc 1 minLength 1 maxLength 30
Comment: *A variety of names is used for these session honors in the United States. Examples are Dean's List, President's List, Honor Roll, etc.*				
HonorsLevel	Optional	A code value representing 1st highest honor, 2nd highest and 3rd highest.	Recommended	minOcc 0 maxOcc 1 **Enumerations:** FirstHighest SecondHighest ThirdHighest
Comment: *Honors Level is critical to understanding the context of Honors Title. In the examples shown for Honors Title above, it might be indicated that "Legion of Honor" is the First Highest honor possible, while "Academic Achievement" is the Third Highest honor available to be awarded a student at the end of a session.*				
NoteMessage	Optional Repeatable	Additional information about the honors	Not Recommended	minOcc 0 maxOcc ∞ minLength 1 maxLength 80

Code illustration:

```
<AcademicHonors>
    <HonorsTitle>Dean's List</HonorsTitle>
    <HonorsLevel>FirstHighest</HonorsLevel>
    <NoteMessage/>
</AcademicHonors>
```

Student.AcademicRecord.AcademicSession.AcademicSummary. AcademicProgram

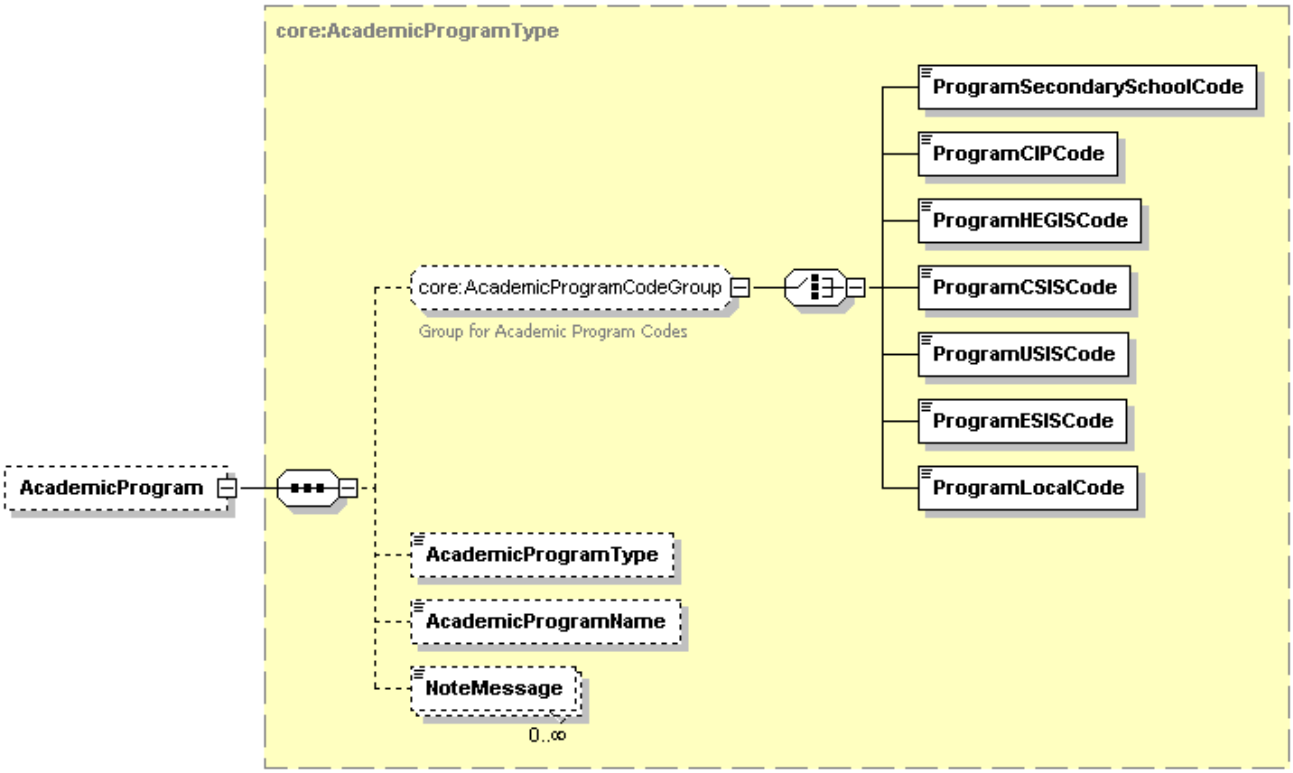

Tag Name	Schema Use	Description	Recommended Use	Format
ProgramSecondarySchool Code	Optional exclusive choice	Code indicating a discipline or field of study assigned by the Classification of Instructional Programs	Not Recommended	minOcc 0 maxOcc 1 **Enumerations:** CareerPrep CollegePrep CollegePrepOrCollegeTechPrep CollegeTechPrep General Occupational Vocational
Comment: *The ProgramSecondarySchoolCode would not be used for the College Transcript.*				
ProgramCIPCode	Optional exclusive choice	Code indicating a discipline or field of study assigned by the Classification of Instructional Programs	Recommended choice	minOcc 0 maxOcc 1 minLength 5 maxLength 7
Comment: *The format of the CIP code is either nn.nnnn or nn.nn*				
ProgramHEGISCode	Optional exclusive choice	Code indicating a discipline or field of study assigned by Higher Education General Information Survey	Recommended choice	minOcc 0 maxOcc 1 minLength 6 maxLength 20
ProgramCSISCode	Optional exclusive choice	Code indicating a discipline or field of study assigned by Statistics Canada Canadian College Student Information System	Recommended choice	minOcc 0 maxOcc 1 minLength 5 maxLength 5

Tag Name	Schema Use	Description	Recommended Use	Format
ProgramUSISCode	Optional exclusive choice	Code indicating a discipline or field of study assigned by the Statistics Canada University Student Information System.	Recommended choice	minOcc 0 maxOcc 1 minLength 5 maxLength 5
ProgramESISCode	Optional exclusive choice	Code indicating a discipline or field of study assigned by the Statistics Canada Enhanced Student Information System.	Recommended choice	minOcc 0 maxOcc 1 minLength 1 maxLength 20
Comment: *Although the Academic Program Code group is optional, if it is included then you must send one and only one of the above codes. The last three code sets (CSIS, USIS, ESIS) are used by postsecondary schools in Canada.*				
ProgramLocalCode	Optional exclusive choice	Code used an individual school or state system primarily for admissions systems	Not Recommended	minOcc 0 maxOcc 1 minLength 1 maxLength 20
Comment: *Since ProgramLocalCode would be used within a single school or system, it would not be appropriate for a College Transcript.*				
AcademicProgramType	Optional	Indicates whether the academic program is a major, minor, area of concentration or specialization.	Recommended	minOcc 0 maxOcc 1 **Enumerations:** Concentration Focus Major Minor SecondMajor Specialization
AcademicProgramName	Optional	Literal name of program, major, or field of study.	Recommended	minOcc 0 maxOcc 1 minLength 1 maxLength 60
NoteMessage	Optional Repeatable	Additional information about the Academic Program	Not Recommended	minOcc 0 maxOcc ∞ minLength 1 maxLength 80

Code illustration:

```
<AcademicProgram>
    <ProgramCIPCode>45.1002</ProgramCIPCode>
    <AcademicProgramType>Major</AcademicProgramType>
    <AcademicProgramName>Government</AcademicProgramName>
    <NoteMessage/>
</AcademicProgram>
```

Student.AcademicRecord.Course

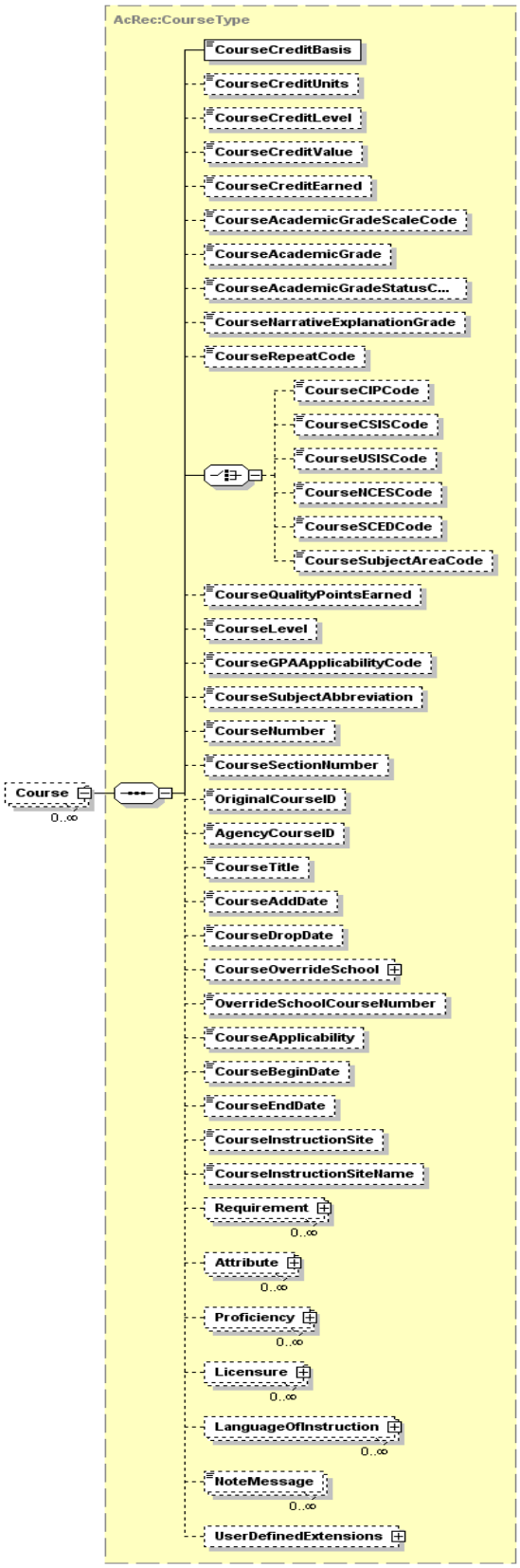

Student.AcademicRecord.Course (Continued)

Note: This complex data element for Course as child to the entire Academic Record should only be used for courses not taken at the sending school. Likewise, if transfer courses are included in the instance document and the session is available, it is preferred to include them as child to Session.

Tag Name	Schema Use	Description	Recommended Use	Format
CourseCreditBasis	Required	The type of enrollment associated with the credit hours for the course. **AcademicRenewal:** Credits and grades in this course have been forgiven and are no longer used to compute cumulative credits and grade points earned for the student's cumulative totals and grade averages. The process of invoking this credit basis is typically done on a petition or request by the student and is typically done for **all** courses taken by the student prior to a certain date or session. Typical justification for approving the request is that the student has not attended the college (or possibly any college) for a period of several years after that specified date. Good practice is that all the courses and grades remain on the student academic record, but are not included in the computation of the student credits earned nor in the student's grade average and that those course designated as Academic Renewal cannot be used to satisfy any degree or other requirements. **AdultBasic:** Credits that may be used to qualify a student for a secondary school certificate but are not usually counted toward the award of a standard high school diploma. They may also be used toward postsecondary certificates, but not counted as credits earned toward a postsecondary associate degree or baccalaureate degree. They are frequently used to indicate preparation for a high school diploma. **AdvancedPlacement:** Credits awarded upon satisfactory completion of The College Board's Advanced Placement Program. **AdvancedStanding:** This is a term not normally associated with a course, but rather when the student has demonstrated, typically through means other than a regular credit course, eligibility to enroll in postsecondary courses that require pre-requisite courses or conditions.	Required	minOcc 1 maxOcc 1 **Enumerations:** Regular AcademicRenewal AdvancedPlacement AdvancedStanding ContinuingEducation Exemption Equivalence InternationalBaccalaureate Military Remedial CreditByExam HighSchoolTransferCredit HighSchoolCreditOnly HighSchoolDualCredit JuniorHighSchoolCredit Major AdultBasic

Tag Name	Schema Use	Description	Recommended Use	Format
		However, some schools may apply this term to a specific pre-requisite course when not completed under normal conditions. **ContinuingEducation:** A term most frequently used to describe courses taken at a postsecondary school that do not count toward a standard associate degree or higher. They may be used to satisfy requirements for a secondary or postsecondary certificate. A standard measure is the Continuing Education Unit described as ten contact hours in a non-credit course with prescribed requirements and evaluation methods. However, the term is also used to describe postsecondary course offerings for students who may have previously enrolled as degree seeking students at a college or university and are now taking selected courses at an off campus location. **CreditByExam:** An option that may be approved for a student in selected courses by which the student is allowed to sign up to take an exam that covers the material for the entire course. If the student passes the exam, the student may receive credit and a grade for the course. College policies vary on how the grade is handled. In some cases, only passing grades are posted to the student record. In other cases, only passing grades of Satisfactory or Pass are posted. **Equivalence:** This would not be a common use for CourseCreditBasis, but could be used to indicate that this course is equivalent to another course. **Exemption:** This is an option that may be offered a student to take an exam or transfer course to satisfy a graduation requirement or a pre-requisite course. Some schools also use it to describe a course transferred in from another school primarily to satisfy a prerequisite course or program requirement. The student typically receives no credits for passing the exam or for the transferred course, but the pre-requisite course or graduation requirement is satisfied. **HighSchoolCreditOnly:** This would typically indicate participation in a high school dual enrollment program. This value would indicate that this course did not result in the award of any college credit, but may have been used to satisfy high school diploma		

Tag Name	Schema Use	Description	Recommended Use	Format
		requirements. **HighSchoolDualCredit:** This would typically indicate participation in a high school dual enrollment program. This value would indicate that this course resulted in the award of both college credit as well as credit toward a high school diploma requirements. **HighSchoolTransferCredit:** This value would be used for secondary school transcripts to indicate a course taken at another school and transferred back to the sending high school. **InternationalBaccalaureate:** This is similar to AdvancedPlacement in that credit for the course is awarded as a result of passing an examination. In this case, the exam is part of the two year international education International Baccalaureate Diploma program. Based on the exam and the grade received on the exam, colleges and universities may award transfer credit in specific courses, or may just award a specific number of general education credits. **JuniorHighSchoolCredit:** This value would be used for secondary school transcripts to indicate a course taken at a junior high or middle school and used to satisfy a high school diploma requirement. **Major:** This is not a common use of this data element, but it could be used to indicate that this course satisfies or partially satisfies a requirement for a major in a program. **Military:** This indicates that the credit was awarded as a result of service in one of the branches of the US military. It could be awarded just as a result of completion of basic training and/or a number of years of service, or it could be awarded for specific military courses or exams completed. **Regular:** Probably the most common of the available enumerated values. This would most likely be the value to use if none of the other values are appropriate. This would be a typical college credit course. **Remedial:** A postsecondary school could use this value to indicate that this course was remedial in nature and does not satisfy any associate or higher degree requirement.		

Tag Name	Schema Use	Description	Recommended Use	Format
CourseCreditUnits	Optional	The type of credit (unit, semester, or quarter) associated with the credit hours earned for the course. **CarnegieUnits:** A common unit of credit used in secondary schools in the US. The unit was developed in 1906 by the Carnegie Foundation as a measure of the amount of time a student has studied a subject. For example, a total of 120 hours in one subject -- meeting 4 or 5 times a week for 40 to 60 minutes, for 36 to 40 weeks each year -- earns the student one "Carnegie unit" of high school credit. Fourteen units were deemed to constitute the minimum amount of preparation that may be interpreted as "four years of academic or high school preparation". **ClockHours:** A unit used primarily for non-credit courses, or for a non-credit (but required) lab or clinic part of a college credit course. It is typically defined as either a 50 minute or a 60 minute hour. **ContinuingEducationUnits:** A Continuing Education Unit is defined as ten contact (60 minute) hours in a non-credit course with prescribed requirements and evaluation methods. **NoCredit:** This is typically used for a non credit course for which no credit is ever awarded. However, it could also be used for an individual student for a regular course for which prior agreement has been reached to award no credit for this particular student for this course. **Other:** Any type of a unit of credit not described in any of the other enumerated values. It should be further clarified by an instance of NoteMessage. **Quarter:** A unit of credit that describes the value of a lecture course that meets for 50 minutes per week for a term or session that meets from 10 to 12 weeks. It is typically associated with a quarter system calendar, but this is not necessarily required. **Semester:** A unit of credit that describes the value of a lecture course that meets for 50 minutes per week for a term or session that meets for 15 or 16 weeks. It is typically associated with a semester or trimester system calendar, but this is not necessarily required. **Units:** This is a loosely defined unit of measure of the worth of the course that is neither a quarter nor a semester unit. It is more often used for secondary school courses. Page 184 of 313 pages **Unreported:** Since this data element would not normally be required, this value would be rarely used. If the data element were to be required and the	Recommended	minOcc 0 maxOcc 1 **Enumerations:** NoCredit Quarter Semester Units ClockHours CarnegieUnits ContinuingEducationUnits Unreported Other

Tag Name	Schema Use	Description	Recommended Use	Format
Comment: *In version 1.0.0 of the schema, there were several errors introduced in the enumerated values of CourseCreditUnits. They incorrectly were introduced into the schema with a trailing space. In this version, new values have been added without the trailing spaces. The values with the incorrect trailing spaces have been deprecated and will be deleted in a future release of the schema.*				
CourseCreditLevel	Optional	The level of credit associated with the credit hours earned for the course.	Recommended	minOcc 0 maxOcc 1 **Enumerations:** Undergraduate LowerDivision UpperDivision Vocational TechnicalPreparatory Graduate Professional Dual DualGraduateProfessional GraduateProfessional
CourseCreditValue	Optional	Number indicating the credit hours that may be earned in the course.	Recommended	minOcc 0 maxOcc 1 xs:decimal
Comment: *For example, if the course is worth 1 semester credit, and if the student withdrew from the course, but the course still appears on the transcript, then the value of this field is "1". Since it is a decimal field, it could also have a value of "1.0" or "1.00".*				
CourseCreditEarned	Optional	The number of credits a student earns by the successful completion of a course.	Recommended	minOcc 0 maxOcc 1 xs:decimal
Comment: *For example, if the course is worth 1 semester credit, and if the student passed the course, then the value of this field is "1". Since it is a decimal field, it could also have a value of "1.0" or "1.00".*				
CourseAcademicGradeScaleCode	Optional	The grading scale used by an academic educational institution for an academic course.	Recommended	minOcc 0 maxOcc 1 See Appendix H
Comment: *Grade scale is based on the American Medical Colleges Admissions Services (AMCAS) grade scale, values 01 through 99. See Appendix H for a complete list of code values.*				
CourseAcademicGrade	Optional	The final grade awarded for participation in the course.	Recommended	minOcc 0 maxOcc 1 minLength 1 maxLength 10

Tag Name	Schema Use	Description	Recommended Use	Format
CourseAcademicGradeStatusCode	Optional	Special enrollment or completion status of this course	Recommended	minOcc 0 maxOcc 1 **Enumerations:** AuditedCourse HonorsGrade Incomplete IncompleteNotResolvedFail InProgress NotYetReported OtherFailGrade OtherPassGrade PassFailFail PassFailPass TransferNoGrade Withdrew WithdrewFailing WithdrewNoPenalty WithdrewPassing
Comment: *For crosswalk purposes from and to the ANSI ASC X12 EDI transaction, the equivalents are 500 – InProgress; 501 – PassFailPass; 502 – PassFailFail; 503 – CreditByExam; 504 – TransferNoGrade; 505 – Incomplete; 506 – WithdrewNoPenalty; 507 – WithdrewPassing; 509 – WithdrewFailing; 510 – HonorsGrade; 511 – AuditedCourse; 512 – Exempted; 513 – NotYetReported; 514 – IncompleteNotResolvedFail; 530 – OtherPassGrade; 531 – OtherFailGrade.*				
CourseNarrativeExplanationGrade	Optional	The narrative of the grade awarded to a student in an academic course in those cases where a course does not receive a letter or numeric grade included in the grading scale of the Course Academic Grade Qualifier.	Not Recommended	minOcc 0 maxOcc 1 minLength 1 maxLength 200
CourseRepeatCode	Optional	Indicates that an academic course has been repeated by a student and how that repeat is to be computed in the student's academic grade average.	Recommended	minOcc 0 maxOcc 1 **Enumerations:** RepeatCounted RepeatNotCounted ReplacementCounted ReplacedNotCounted RepeatOtherInstitution NotCountedOther
Comment: *If the sending school has no policy on how to treat repeated courses, then this data element can be ignored by the sending school. Likewise, if the receiving school has no policy or has a policy to ignore repeat calculations, then it can also be ignored. But if the sending school has such a policy, then this is the place to indicate that policy. For example, if the student previously took the same course, received a failing grade and has now completed this course with a passing grade, then the appropriate value might be "ReplacementCounted". Likewise, if this is the first attempt of the repeated course, then this value might be "RepeatNotCounted".*				
CourseCIPCode	Optional Choice	The Classification of Instructional Programs (CIP) code to describe the area of study for the course.	Recommended choice	minOcc 0 maxOcc 1 minLength 1 maxLength 10
Comment: *The two approved formats of the CIP Code for Academic Programs are nn.nnnn and nn.nn. Although this code set is approved by the US Department of Education's National Center for Education Statistics every ten years to describe academic programs, it is also commonly used to classify academic courses. The last version of the code set was approved by NCES in 2000. Since some states have modified this code set when used to describe courses, this schema allows a min/max length of 1/10.*				
CourseCSISCode	Optional Choice	The Statistics Canada College Student Information System (CSIS) code to describe the area of study for the course.	Recommended choice	minOcc 0 maxOcc 1 minLength 1 maxLength 10

Tag Name	Schema Use	Description	Recommended Use	Format
CourseUSISCode	Optional Choice	The Statistics Canada University Student Information System (USIS) code to describe the area of study for the course.	Recommended choice	minOcc 0 maxOcc 1 minLength 1 maxLength 10
Comment: *The two code sets immediately above (CSIS, USIS) are used to describe course content for courses taken in postsecondary schools in Canada.*				
CourseNCESCode	Optional Choice	The code set developed (or being developed) by the United States Department of Education's National Center for Education Statistics to describe content and level of a K12 course	Not Recommended	minOcc 0 maxOcc 1 minLength 1 maxLength 10
Comment: *This code set was partially developed by NCES, but was never fully completed nor was it used by a reasonable percentage of secondary schools in the US. It is for high school courses only.*				
CourseSCEDCode	Optional Choice	The School Codes for the Exchange of Data (SCED) code set being developed for the United States Department of Education's National Center for Education Statistics to describe the content and level of a course	Not Recommended	minOcc 0 maxOcc 1 minLength 12 maxLength 12
Comment: *This is a code set for high school courses that is structured as follows:* *Digits 1, 2: This is the major subject area of course content in the high school course. Its breakdown is shown as the next data element (CourseSubjectAreaCode) which follows.* *Digits 3-5: A further breakdown of the course content in the high school course.* *Digit 6: Course Level (B for basic or remedial; G for general or regular; E for enriched or advanced, and H for honors.* *Digits 7-10: Available Credit. For example, a course offered as a 1 Carnegie Unit course would indicate 1.00* *Digits 11-12: Sequence of Courses. For example, 34 would be used to indicate this is the third course in a 4 course sequence.* *Since this is a code set designed for high school course content, it is not recommended for use in the College Transcript.*				

Tag Name	Schema Use	Description	Recommended Use	Format
CourseSubjectAreaCode	Optional Choice	This set of code values is derived from the first two digits of the CourseSCEDCode above.	Not Recommended	minOcc 0 maxOcc 1 **Enumerations:** EnglishLanguageLiterature Mathematics LifePhysicalSciences SocialSciencesHistory FinePerformingArts ForeignLanguageLiterature ReligiousEducationTheology PhysicalHealthSafetyEducation MilitaryScience ComputerInformationSciences CommunicationsAudioVisualTechnology BusinessMarketing Manufacturing HealthCareSciences PublicProtectiveGovernmentService HospitalityTourism ArchitectureConstruction AgriculturefoodNaturalResources HumanServices TransportationDistributionLogistics EngineeringTechnology Miscellaneous
Comment: *This is a code set that is based on the first two digits of the Course SCED Code for high school courses. The SCED Code is maintained by the US Department of Education's National Center for Education Statistics (NCES). If it is updated in the future, then PESC will keep this code set in sync with the first two digits of the SCED Code.*				
CourseQualityPointsEarned	Optional	The numerical value assigned to a letter grade to provide a basis of quantitative determination of an average.	Recommended	minOcc 0 maxOcc 1 xs:decimal
Comment: *For example, if the student earned a grade of B in the course, and if the grade of B is worth 3 grade points, and if this course was worth 1 semester credit, then the value of this data element is "3". Likewise, for a course that is worth 0.5 semester credits, a grade of B would be worth "1.5" CourseQualityPointsEarned.*				
CourseLevel	Optional	The level of work demonstrated by successful completion of the academic course being described	Recommended	minOcc 0 maxOcc 1 **Enumerations:** Accelerated AdultBasic AdvancedPlacement Basic InternationalBaccalaureate CollegeLevel CollegePreparatory Dual GiftedTalented GraduateProfessional Honors LowerDivision NonAcademic Remedial SpecialEducation TechnicalPreparatory UpperDivision Vocational

Tag Name	Schema Use	Description	Recommended Use	Format
CourseGPAApplicabilityCode	Optional	An indicator of whether or not this course being described is included in the computation of the student's Grade Point Average, and if so, if it is weighted differently from regular courses.	Recommended	minOcc 0 maxOcc 1 **Enumerations:** Applicable NotApplicable Weighted
CourseSubjectAbbreviation	Optional	The alphabetic abbreviation of the academic department or discipline offering the course. It is one part of the total course identifier number.	Recommended	minOcc 0 maxOcc 1 minLength 1 maxLength 10
Comment: *As with all recommended data elements, if the sending school does not use alphabetic abbreviations as part of the course numbering system, then this data element would not exist and would not be included.*				
CourseNumber	Optional	The official reference number portion of a course identifier. This number frequently designates the level of the course as well as the level of the student expected to enroll in the course	Recommended	minOcc 0 maxOcc 1 minLength 1 maxLength 15
Comment: *As with all recommended data elements, if the sending school does not use numeric identifiers as part of the course numbering system, then this data element would not exist and would not be included. However, the unique identifier of this particular course must be included in the combination of "CourseSubjectAbbreviation" and "CourseNumber".*				
CourseSectionNumber	Optional	The number assigned to differentiate among distinct occurrences of courses that have the same course abbreviation and number but are considered to be different courses.	Optional	minOcc 0 maxOcc 1 minLength 1 maxLength 10
Comment: *If course section number is used, it should probably be further explained in a note. If it only means, for example, that the course was taught at 9 am instead of 8 am, then it should probably not be included.*				
OriginalCourseID	Optional	The course ID as it was listed when the credit was earned (e.g., before a system conversion) to show consistency between present transcripts and older ones.	Recommended	minOcc 0 maxOcc 1 minLength 1 maxLength 30
Comment: *The "OriginalCourseID" is composed of both the alpha CourseSubjectAbbreviation concatenated with the "CourseNumber", so the combination of the alpha and numeric portions of the course ID are included in this one data element.*				
AgencyCourseID	Optional	The course ID that might have been assigned to this course by the state or other agency	Optional	minOcc 0 maxOcc 1 minLength 1 maxLength 30
CourseTitle	Optional	The name or title of the course taken by a student at an academic institution.	Recommended	minOcc 0 maxOcc 1 minLength 1 maxLength 60
Comment: *Although the maximum length allowed for this data element is 60 characters, the student data base at many schools cannot accept a title that long. Therefore, it may be cut off by the computer at the receiving school. For example, a course title such as "An Introduction to the Study of Philosophy" may become "An Introduction to the Study of" at the receiving school. It would make more sense for the sending school to reduce the title to "Intro to Philosophy".*				
CourseAddDate	Optional	The date a student was added to an academic course at a school.	Optional	minOcc 0 maxOcc 1 xs:date
Comment: *Most schools would not have this date readily available in the school's database. It would be of questionable value to the receiving postsecondary institution. The format of date is ccyy-mm-dd.*				

Tag Name	Schema Use	Description	Recommended Use	Format
CourseDropDate	Optional	The date on which the student drops or withdraws from the course.	Optional	minOcc 0 maxOcc 1 xs:date
Comment: *If this date is readily available, it might be of some value to the receiving postsecondary institution. However, most postsecondary institutions would probably ingnore this field.*				
CourseOverrideSchool	Optional	The school where the credit was earned if different from the school in this occurrence of the Academic Record	Conditional	minOcc 0 maxOcc 1
Comment: *This might be used when a full time student at one school is also taking one or two courses at another community college or university during the session by some sort of prior institutional agreement. This complex data element will be expanded on page 193 which follows in this Guide.*				
OverrideSchoolCourseNumber	Optional	The course ID as it was listed at the school where the credit was earned	Conditional	minOcc 0 maxOcc 1 minLength 1 maxLength 35
Comment: *CourseOverrideSchool and OverrideSchoolCourseNumber are normally used for situations like consortiums, concurrent enrollment or transfer courses, although transfer work is recommended to be reported in a separate session with an override school. This data element, if included, would include both the CourseAbbreviation and CourseNumber at the override school. They would be concatenated. This data element would only be included if CourseOverrideSchool were also included.*				
CourseApplicability	Optional	The academic program to which this academic course applies toward graduation.	Not Recommended	minOcc 0 maxOcc 1 **Enumerations:** NotApplicable FirstProgram SecondProgram BothPrograms
CourseBeginDate	Optional	The official begin date for this course	Recommended	minOcc 0 maxOcc 1 xs:date
Comment: *The format of date is ccyy-mm-dd.*				
CourseEndDate	Optional	The official end date for this course	Recommended	minOcc 0 maxOcc 1 xs:date
Comment: *CourseBeginDate and CourseEndDate are recommended if they are available. The format for date is ccyy-mm-dd.*				
CourseInstructionSite	Optional	An indication of the type of location at which the course is taught.	Optional	minOcc 0 maxOcc 1 **Enumerations:** OnCampus OffCampus Extension StudyAbroad Correctional Millitary Telecommunication Auxiliary ClinicHospital
CourseInstructionSiteName	Optional	The name of the location at which the course is taught.	Optional	minOcc 0 maxOcc 1 minLength 1 maxLength 30
Requirement	Optional Repeatable	Curriculum requirements satisfied by successful completion of this course	Optional	minOcc 0 maxOcc ∞
Comment: *This complex data element will be expanded on page 198 which follows.*				

Tag Name	Schema Use	Description	Recommended Use	Format
Attribute	Optional Repeatable	Attributes of this course which may require special handling by the receiving institution	Optional	minOcc 0 maxOcc ∞
Comment: *This complex data element will be expanded on page 200 which follows.*				
Proficiency	Optional Repeatable	A proficiency that may be partially or totally demonstrated by successful completion of this course	Optional	minOcc 0 maxOcc ∞
Comment: *This complex data element will be expanded on page 202 which follows..*				
Licensure	Optional Repeatable	Licensure requirements satisfied by successful completion of this course	Optional	minOcc 0 maxOcc ∞
Comment: *This complex data element will be expanded on page 204 which follows..*				
LanguageOfInstruction	Optional Repeatable	Language associated with one or more aspects of the course	Optional	minOcc 0 maxOcc ∞
Comment: *This optional data element would not be sent if the language is English and the sending school is in the United States. This complex data element will be expanded on page 205 which follows.*				
NoteMessage	Optional Repeatable	Additional information about the course	Not Recommended	minOcc 0 maxOcc ∞ minLength 1 maxLength 80
UserDefinedExtensions	Optional	Additional structured information. Requires mutually defined XML schema.	Optional	minOcc 0 maxOcc 1
Comment: *This is not the appropriate place in the instance document to include courses taken at the sending school. Neither is it the recommended place to include courses transferred in from another school, if enough information is available to include them as a separate session either with an override school indicated, or as another iteration of the academic record for the other school. If possible, always include courses under a session. If this is not possible, for example, if the courses were transferred in from an international school, or not enough information was included about the session at the other school to make the session meaningful, then those transfer courses may be included here.*				

Student.AcademicRecord.Course (Continued)

Code illustration:


```
<Course>
    <CourseCreditBasis>Regular</CourseCreditBasis>
    <CourseCreditUnits>Semester</CourseCreditUnits>
    <CourseCreditLevel>LowerDivision</CourseCreditLevel>
    <CourseCreditValue>3</CourseCreditValue>
    <CourseCreditEarned>3</CourseCreditEarned>
    <CourseAcademicGradeScaleCode>25</CourseAcademicGradeScaleCode>
    <CourseAcademicGrade>A</CourseAcademicGrade>
    <CourseNarrativeExplanationGrade/>
    <CourseRepeatCode>RepeatCounted</CourseRepeatCode>
    <CourseCIPCode>12.1203</CourseCIPCode>
    <CourseQualityPointsEarned>12</CourseQualityPointsEarned>
    <CourseLevel>LowerDivision</CourseLevel>
    <CourseSubjectAbbreviation>HIS</CourseSubjectAbbreviation>
    <CourseNumber>315K</CourseNumber>
    <CourseSectionNumber/>
    <OriginalCourseID>HIST105</OriginalCourseID>
    <AgencyCourseID>FL:HIS020201</AgencyCourseID>
    <CourseTitle>United States History 1</CourseTitle>
    <CourseAddDate>2005-09-01</CourseAddDate>
    <CourseDropDate/>
    <CourseOverrideSchool>

    </CourseOverrideSchool>
    <OverrideSchoolCourseNumber>HST26A</OverrideSchoolCourseNumber>
    <CourseApplicability/>
    <CourseBeginDate>2005-09-01</CourseBeginDate>
    <CourseEndDate>2005-12-07</CourseEndDate>
    <CourseInstructionSite>OnCampus</CourseInstructionSite>
    <CourseInstructionSiteName/>
    <Requirement>

    </Requirement>
    <Attribute>

    </Attribute>
    <Proficiency>

    </Proficiency>
    <Licensure>

    </Licensure>
    <LanguageOfInstruction>

    </LanguageOfInstruction>
    <NoteMessage/>
    <UserDefinedExtensions />
</Course>
```

Student.AcademicRecord.Course.CourseOverrideSchool

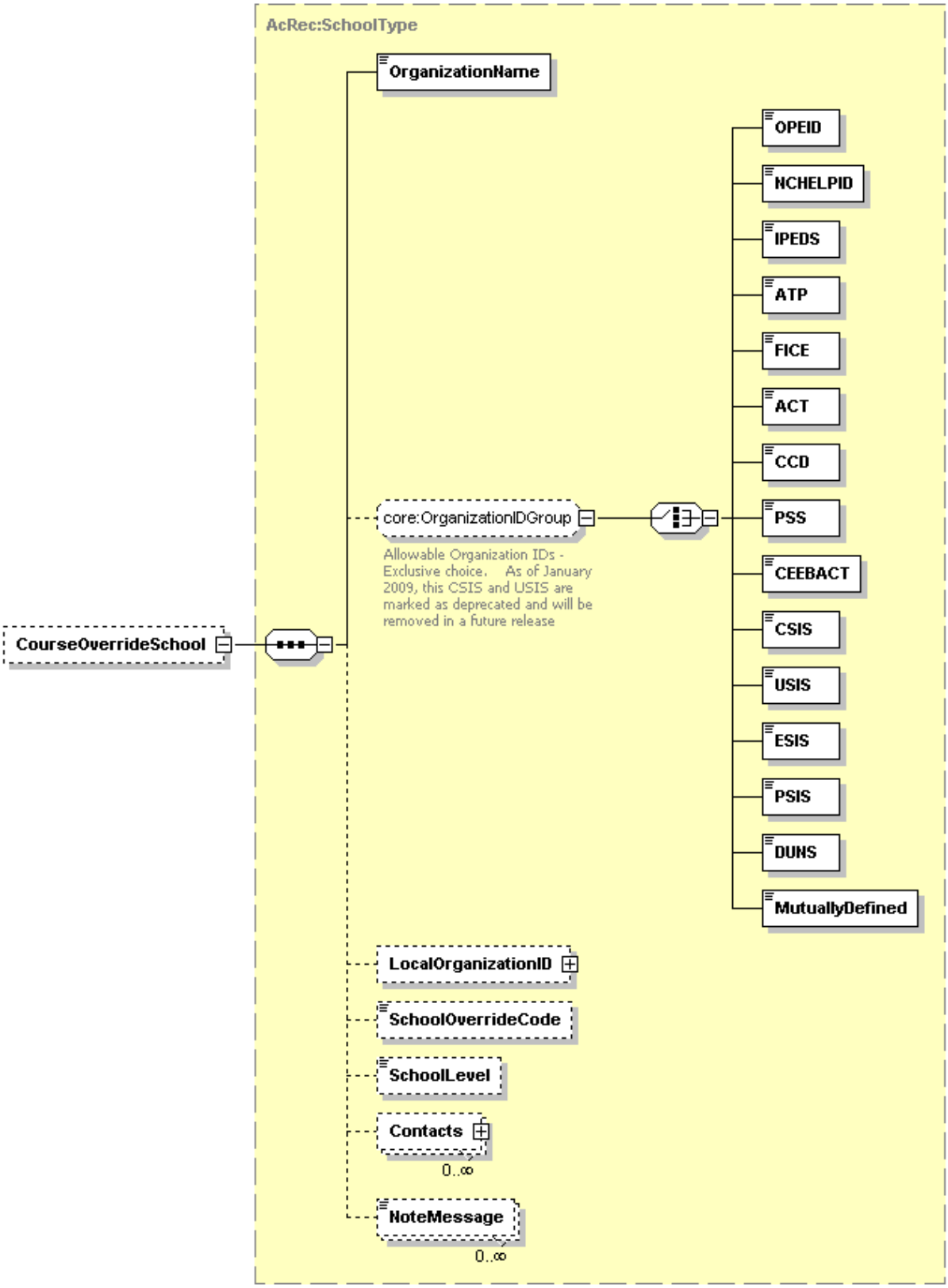

Student.AcademicRecord.Course.CourseOverrideSchool (Continued)

Tag Name	Schema Use	Description	Recommended Use	Format
OrganizationName	Required	Name of override school	Required	minOcc 1 maxOcc 1 minLength 1 maxLength 60
OPEID	Optional choice	The unique identifier assigned by the Office of Postsecondary Education for each data exchange partner.	Recommended choice	minOcc 0 maxOcc 1 minLength 3 maxLength 8
Comment: *The OPEID would be appropriate if the course was taken at a postsecondary institution in the US.*				
NCHELPID	Optional choice	The unique identifier assigned by National Council on Higher Education Loan Programs for each data exchange partner.	Not Recommended	minOcc 0 maxOcc 1 minLength 3 maxLength 8
Comment: *The NCHELPID is not an appropriate choice to describe a school that offers academic courses.*				
IPEDS	Optional choice	The unique identifier assigned by the National Center for Education Statistics for the Integrated Postsecondary Education Data System for each postsecondary data exchange partner.	Recommended choice	minOcc 0 maxOcc 1 minLength 6 maxLength 6
Comment: *The IPEDS code set is appropriate for indicating a postsecondary school in the US that offers academic courses.*				
ATP	Optional choice	The unique identifier assigned for the Admissions Testing Program by the College Board for each postsecondary data exchange partner.	Recommended choice	minOcc 0 maxOcc 1 minLength 6 maxLength 6
Comment: *The ATP code set is appropriate for indicating a postsecondary school that offers academic courses.*				
FICE	Optional choice	The unique identifier assigned for the Federal Interagency Committee on Education by the US Department of Education's National Center for Education Statistics for each postsecondary data exchange partner	Recommended choice	minOcc 0 maxOcc 1 minLength 6 maxLength 6
Comment: *The FICE code set is appropriate for indicating a school that offers academic courses. However, the FICE code set has not been maintained for many years, so it would not be recommended for newer postsecondary schools.*				
ACT	Optional choice	The unique identifier assigned by the American College Testing or ACT, Inc., for each postsecondary data exchange partner. See www.act.org.	Recommended choice	minOcc 0 maxOcc 1 minLength 4 maxLength 4
Comment: *The ACT code set is appropriate for indicating a postsecondary school that offers academic courses.*				
CCD	Optional choice	The unique identifier assigned by the US Department of Education's National Center for Education Statistics as the Common Core of Data for each K12 data exchange partner.	Not Recommended	minOcc 0 maxOcc 1 minLength 12 maxLength 12
Comment: *The CCD code set is appropriate for indicating a high school, but not for postsecondary schools.*				

Tag Name	Schema Use	Description	Recommended Use	Format
PSS	Optional choice	The unique identifier assigned by the US Department of Education's National Center for Education Statistics for private K12 data exchange partners.	Not Recommended	minOcc 0 maxOcc 1 minLength 8 maxLength 8
Comment: *The PSS code set is appropriate for indicating a private high school, but not for postsecondary schools.*				
CEEBACT	Optional choice	The unique identifier assigned by the College Entrance Examining Board and ACT for each data exchange partner.	Not Recommended	minOcc 0 maxOcc 1 minLength 6 maxLength 6
Comment: *The CEEBACT code set is appropriate for indicating a high school, but not for postsecondary schools.*				
CSIS	Optional choice	The unique identifier assigned by the Statistics Canada College Student Information System for each data exchange partner	Not Recommended	minOcc 0 maxOcc 1 minLength 6 maxLength 6
USIS	Optional choice	The unique identifier assigned by the Statistics Canada University Student Information System for each data exchange partner	Not Recommended	minOcc 0 maxOcc 1 minLength 6 maxLength 6
ESIS	Optional choice	The unique identifier assigned by the Statistics Canada Enhanced Student Information System for each data exchange partner.	Not Recommended	minOcc 0 maxOcc 1 minLength 8 maxLength 8
Comment: *The three code sets immediately above have been phased out and a new code set (Postsecondary Schools Information System or PSIS) is now the preferred one to identify postsecondary schools in Canada.*				
PSIS	Optional choice	The unique identifier assigned by the Statistics Canada Enhanced Student Information System for each data exchange partner.	Recommended choice	minOcc 0 maxOcc 1 minLength 8 maxLength 8
Comment: *The PSIS is the new code set to identify postsecondary schools in Canada.*				
DUNS	Optional choice	Data Universal Numbering System (DUNS), unique nine character company identification number issued by Dun and Bradstreet Corporation.	Not Recommended	minOcc 0 maxOcc 1 minLength 9 maxLength 9
Comment: *The DUNS code would not normally be an appropriate code set to use to indicate an academic institution that offered an academic course.*				
MutuallyDefined	Optional choice	This code set should only be used between established trading partners for those schools that have no code set in one of the other code sets noted above.	Not Recommended	minOcc 0 maxOcc 1 minLength 9 maxLength 9
Comment: *The MutuallyDefined code set would not normally be an appropriate code set to use to indicate an academic institution that offered an academic course and had a code In one of the other code sets listed.*				
Comment: *Although it is not necessary to send one of the above 13 codes, if you choose to do so, then choose one of the noted appropriate codes.*				
LocalOrganizationID	Optional	A code set typically used by a state, province or region to further identify the school whose record is beng sent	Optional	minOcc 0 maxOcc 1
Comment: *This complex data element will be expanded on page 197 which follows.*				

Tag Name	Schema Use	Description	Recommended Use	Format
SchoolOverrideCode	Optional	The source of the academic credit **if not awarded by the home or parent institution.** *Institutional* - Institutional Agreement *Multicampus* - Multiple Campus Course Offering *Transfer* - Transfer Credit *StudyAbroad* - Study Abroad *Coop* - Cooperative Program *Reciprocal* - Reciprocal Exchange *Internship* - Internship	Recommended	minOcc 0 maxOcc 1 **Enumerations:** Institutional Multicampus Transfer StudyAbroad Coop Reciprocal Internship
SchoolLevel	Optional	Indicates level of Override School	Recommended	minOcc 0 maxOcc 1 **Enumerations:** Elementary Secondary Postsecondary
Contacts	Optional Repeatable	Contact info at Override School	Not Recommended	minOcc 0 maxOcc ∞
Comment: *This complex data element is not recommended since the information is not readily available at the sending school. However, if you'd like to include it, you can see the expanded complex data element on page 78 earlier in this Guide.*				
NoteMessage	Optional Repeatable	Additional information about the Course Override School	Not Recommended	minOcc 0 maxOcc ∞ minLength 1 maxLength 80

Code illustration:

```
<CourseOverrideSchool>
    <OrganizationName>Top Notch University</OrganizationName>
    <FICE>111222</FICE>
    <LocalOrganizationID>

    </LocalOrganizationID>
    <SchoolOverrideCode>Reciprocal</SchoolOverrideCode>
    <SchoolLevel>Postsecondary</SchoolLevel>
    <Contacts/>
    <Note/Message/>
</CourseOverrideSchool>
```

Student.AcademicRecord.Course.CourseOverrideSchool. LocalOrganizationID

Note: Although the complex data element LocalOrganizationID is an optional data element, if you choose to send LocalOrganizationID, then you must also send both LocalOrganizationIDCode and also LocalOrganizationIDQualifier

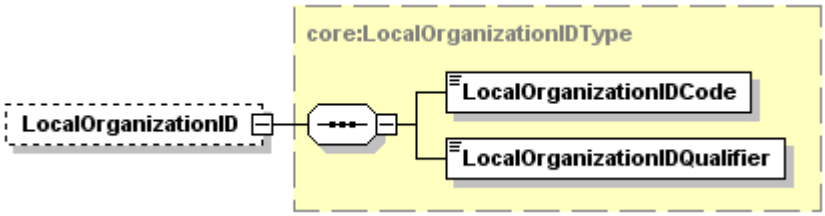

Tag Name	Schema Use	Description	Recommended Use	Format
LocalOrganizationIDCode	Required	The code assigned for the school by the state, province or other mutually defined agency specified in the LocalIDQualifier that follows.	Required	minOcc 1 maxOcc 1 minLength 1 maxLength 35
Comment: *This is a required data element only if the LocalOrganizationID data element is sent. This is typically the administrative school code assigned by a state or province to identify the override school in that state.*				
LocalOrganizationIDQualifier	Required	This is the state, province or other mutually definded agency that assigned the LocalOrganizationID Code above.	Required	minOcc 1 maxOcc 1 See Appendix A.
Comment: *This is a required data element only if the LocalOrganizationID data element is sent. This is typically the state or province that assigned the code to identify the override school in that state.*				

Code illustration:

```
<LocalOrganizationID>
    <LocalOrganizationIDCode>340005501</LocalOrganizationIDCode>
    <LocalOrganizationIDQualifier>FL</LocalOrganizationIDQualifier>
</LocalOrganizationID>
```

Student.AcademicRecord.Course.Requirement

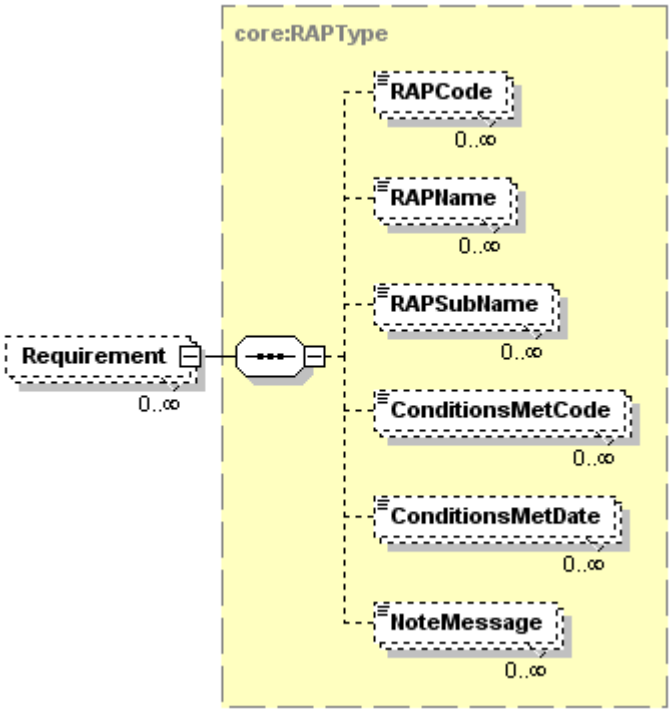

Tag Name	Schema Use	Description	Recommended Use	Format
RAPCode	Optional Repeatable	Requirement demonstrated or earned in addition to or as part of an academic award.	Recommended	minOcc 0 maxOcc ∞ minLength 1 maxLength 3
Comment: *If this data element is to be used effectively, a code set should be created by a state or region. An example is given below in the Code Illustration. If not, then User Defined Extensions would be an alternate method of including this information.*				
RAPName	Optional Repeatable	Literal name of requirement	Recommended	minOcc 0 maxOcc ∞ minLength 1 maxLength 60
RAPSubName	Optional Repeatable	Literal name of subsection of requirement	Optional	minOcc 0 maxOcc ∞ minLength 1 maxLength 60
ConditionsMetCode	Optional Repeatable	Indicates whether and how conditions for the requirement have been attained.	Recommended	minOcc 0 maxOcc ∞ **Enumerations:** Yes No Conditional MutuallyDefined
ConditionsMetDate	Optional Repeatable	Date requirement was met.	Optional	minOcc 0 maxOcc ∞ xs:date
Comment: *The format of date is ccyy-mm-dd.*				

Tag Name	Schema Use	Description	Recommended Use	Format
NoteMessage	Optional Repeatable	Additional information about the requirement	Not Recommended	minOcc 0 maxOcc ∞ minLength 1 maxLength 80
Comment: *For example, the Requirement part of the course could be used to indicate that completion of this course satisfies a computer literacy requirement for graduation or a Community Service requirement.*				

Code illustration:

```
<Requirement>
    <RAPCode>9TX</RAPCode>
    <RAPName>TXDegReq</RAPName>
    <RAPSubName>UT Austin Writing Component</RAPSubName>
    <ConditionsMetCode>Yes</ConditionsMetCode>
    <ConditionsMetDate>2002-08-13</ConditionsMetDate>
    <NoteMessage/>
</Requirement>
```

Student.AcademicRecord.Course.Attribute

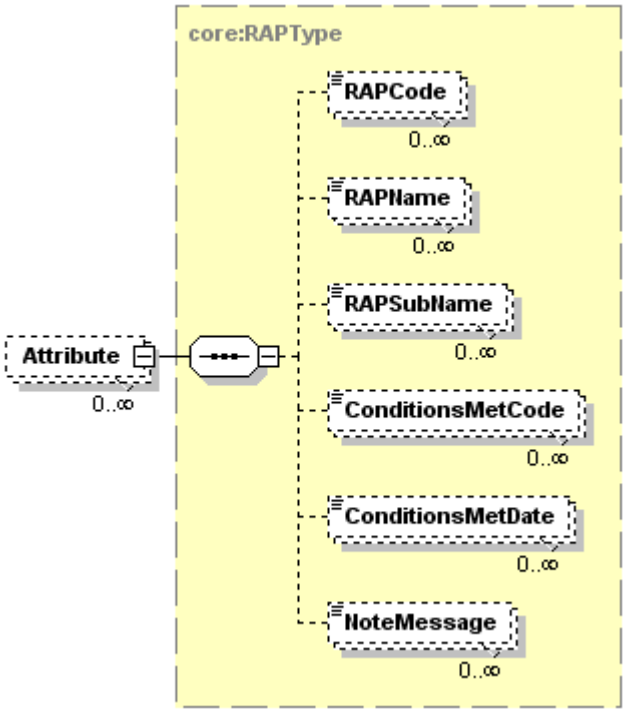

Tag Name	Schema Use	Description	Recommended Use	Format
RAPCode	Optional Repeatable	Attribute demonstrated or earned in addition to academic award.	Recommended	minOcc 0 maxOcc ∞ minLength 1 maxLength 3
Comment: *If this data element is to be used effectively, a code set should be created by a state or region. An example is given below in the Code Illustration. If not, then User Defined Extensions would be an alternate method of including this information.*				
RAPName	Optional Repeatable	Literal name of attribute	Recommended	minOcc 0 maxOcc ∞ minLength 1 maxLength 60
RAPSubName	Optional Repeatable	Literal name of subsection of attribute	Optional	minOcc 0 maxOcc ∞ minLength 1 maxLength 60
ConditionsMetCode	Optional Repeatable	Indicates whether and how conditions for certification have been attained.	Recommended	minOcc 0 maxOcc ∞ **Enumerations:** Yes No Conditional MutuallyDefined
ConditionsMetDate	Optional Repeatable	Date of attribute	Optional	minOcc 0 maxOcc ∞
Comment: *The format for date is ccyy-mm-dd.*				

Tag Name	Schema Use	Description	Recommended Use	Format
NoteMessage	Optional Repeatable	Additional information about the attribute	Not Recommended	minOcc 0 maxOcc ∞ minLength 1 maxLength 80
Comment: *For example, the Attribute part of the course could be used to indicate that the course was taught by a university professor, or it was taught in a hands-on computer lab, etc. It would normally only have significant meaning when used by all participating schools within a state or region.*				

Code illustration:

```
<Attribute>
    <RAPCode>9TX</RAPCode>
    <RAPName>TXCORECURR</RAPName>
    <RAPSubName>020Mathematics (I)</RAPSubName>
    <ConditionsMetCode>Yes</ConditionsMetCode>
    <ConditionsMetDate>1997-03-01</ConditionsMetDate>
    <NoteMessage/>
</Attribute>
```

Student.AcademicRecord.Course.Proficiency

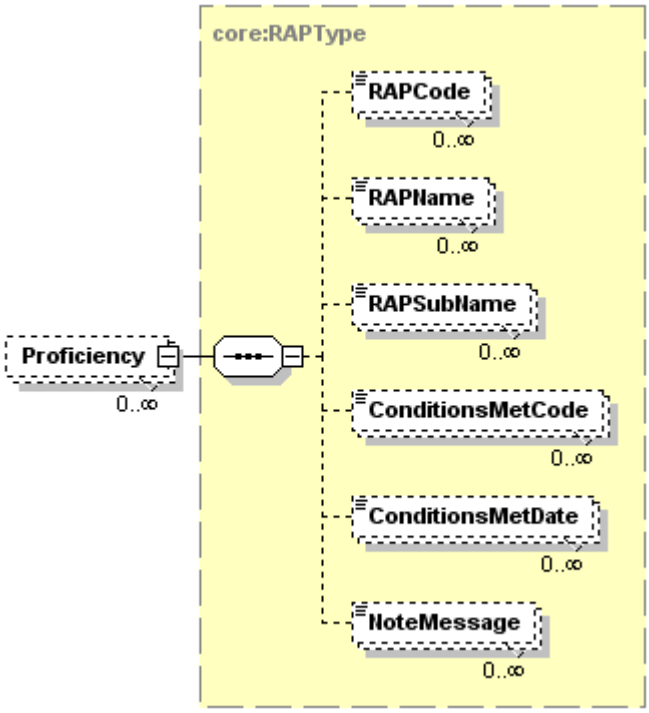

Tag Name	Schema Use	Description	Recommended Use	Format
RAPCode	Optional Repeatable	Proficiency demonstrated or earned in addition to academic award.	Recommended	minOcc 0 maxOcc ∞ minLength 1 maxLength 3
Comment: *If this data element is to be used effectively, a code set should be created by a state or region. An example is given below in the Code Illustration. If not, then User Defined Extensions would be an alternate method of including this information.*				
RAPName	Optional Repeatable	Literal name of proficiency	Recommended	minOcc 0 maxOcc ∞ minLength 1 maxLength 60
RAPSubName	Optional Repeatable	Literal name of subsection of proficiency	Optional	minOcc 0 maxOcc ∞ minLength 1 maxLength 60
ConditionsMetCode	Optional Repeatable	Indicates whether and how conditions for certification have been attained.	Recommended	minOcc 0 maxOcc ∞ **Enumerations:** Yes No Conditional MutuallyDefined
ConditionsMetDate	Optional Repeatable	Date of proficiency	Optional	minOcc 0 maxOcc ∞ xs:date
Comment: *The format for date is ccyy-mm-dd.*				

Tag Name	Schema Use	Description	Recommended Use	Format
NoteMessage	Optional Repeatable	Additional information about the proficiency	Not Recommended	minOcc 0 maxOcc ∞ minLength 1 maxLength 80
Comment: *For example, the Proficiency part of the course could be used to indicate successful completion of this course demonstrates a school graduation requirement for computer competency or English proficiency.*				

Code illustration:

```
<Proficiency>
    <RAPCode>9TX</RAPCode>
    <RAPName>Computer Literacy Proficiency</RAPName>
    <RAPSubName>CSPROF - ComputerSkillsProficiency</RAPSubName>
    <ConditionsMetCode>Yes</ConditionsMetCode>
    <ConditionsMetDate>2004-10-23</ConditionsMetDate>
     <NoteMessage>Students learn MS Word, PPT and Web Search in this course.</NoteMessage>
</Proficiency>
```

Student.AcademicRecord.Course.Licensure

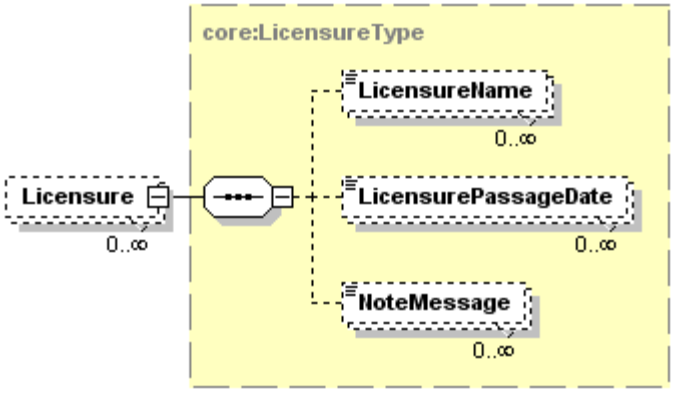

Tag Name	Schema Use	Description	Recommended Use	Format
LicensureName	Optional Repeatable	Free-form name of license or certification.	Recommended	minOcc 0 maxOcc ∞ minLength 1 maxLength 60
LicensurePassageDate	Optional Repeatable	Date of licensure passage	Optional	minOcc 0 maxOcc ∞ xs:date
Comment: *The format for date is ccyy-mm-dd.*				
NoteMessage	Optional Repeatable	Additional information about the licensure	Not Recommended	minOcc 0 maxOcc ∞ minLength 1 maxLength 80

Code illustration:

```
<Licensure>
    <LicensureName>Occupational Therapy Assistant</LicensureName>
    <LicensurePassageDate>2004-05-20</LicensurePassageDate>
    <NoteMessage />
</Licensure>
```

Student.AcademicRecord.Course.LanguageOfInstruction

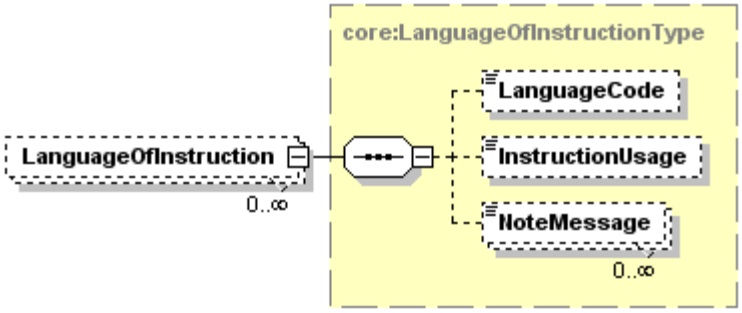

Tag Name	Schema Use	Description	Recommended Use	Format
LanguageCode	Optional	Code indicating the language being used, using ISO 639-2 code (Alpha-3) set. These codes are available at http://www.loc.gov/standards/iso639-2/	Recommended	minOcc 0 maxOcc 1 See Language Codes in Appendix C1 or C2.
InstructionUsage	Optional	The use of the language in the context of instruction. *Instruction* - Language of Instruction *Examination* - Language of Examination *WrittenExam* - Language in which Examination is written	Recommended	minOcc 0 maxOcc 1 **Enumerations:** Instruction Examination WrittenExam
NoteMessage	Optional Repeatable	Additional information about the language of instruction	Not Recommended	minOcc 0 maxOcc ∞ minLength 1 maxLength 80
Comment: *This is an optional data element. If it is not included, it is assumed the language of instruction was English if the high school sending the record is in the United States.*				

Code illustration:

```
<LanguageOfInstruction>
    <LanguageCode>fre</LanguageCode>
    <InstructionUsage>Instruction</InstructionUsage>
    <NoteMessage/>
</LanguageOfInstruction>
```

Student.AcademicRecord.AdditionalStudentAchievements

Tag Name	Schema Use	Description	Recommended Use	Format
Requirement	Optional Repeatable	Curriculum requirements satisfied by successful completion of the Additional Student Achievement	Optional	minOcc 0 maxOcc ∞
Comment: *This complex data element will be expanded on page 208 which follows..*				
Attribute	Optional Repeatable	Attributes of the Additional Student Achievement which may require special handling by the receiving institution	Optional	minOcc 0 maxOcc ∞
Comment: *This complex data element will be expanded on page 210 which follows..*				
Proficiency	Optional Repeatable	Proficiency level signified by successful completion of the Additional Student Achievement	Optional	minOcc 0 maxOcc ∞
Comment: *This complex data element will be expanded on page 212 which follows..*				
Language	Optional Repeatable	Language associated with one or more aspects of the Additional Student Achievement	Optional	minOcc 0 maxOcc ∞
Comment: *This complex data element will be expanded on page 214 which follows..*				
Licensure	Optional Repeatable	Licensure requirements satisfied by successful completion of the Additional Student Achievement	Optional	minOcc 0 maxOcc ∞
Comment: *This complex data element will be expanded on page 215 which follows..*				

Tag Name	Schema Use	Description	Recommended Use	Format
NoteMessage	Optional Repeatable	Additional information about the Additional Student Achievement	Not Recommended	minOcc 0 maxOcc ∞ minLength 1 maxLength 80
Comment: *The use of the Requirement, Attribute and Proficiency fields is normally based on previously made agreements between or among selected trading partners (usually within a state or region). For example, a specific state might have a requirement for computer competency. That state might use a requirement code of TXA, where TX is the state code and A designates the computer competency requirement. Another state might wish to identify an attribute of the student that indicates the student is the first in his or her familty to attend or graduate from a high school. This attribute might be identified with a state code of IA and the attribute code of B. This attribute would be based on prior agreements among states, and it provides a great deal of flexibility to exchange previously specified data within a state or region.*				

Code illustration:

```
<AdditionalStudentAchievements>
    <Requirement>

    </Requirement>
    <Attribute>

    </Attribute>
    <Proficiency>

    </Proficiency>
    <Language>

    </Language>
    <Licensure>

    </Licensure>
    <NoteMessage/>
</AdditionalStudentAchievements>
```

Student.AcademicRecord.AdditionalStudentAchievements.Requirement

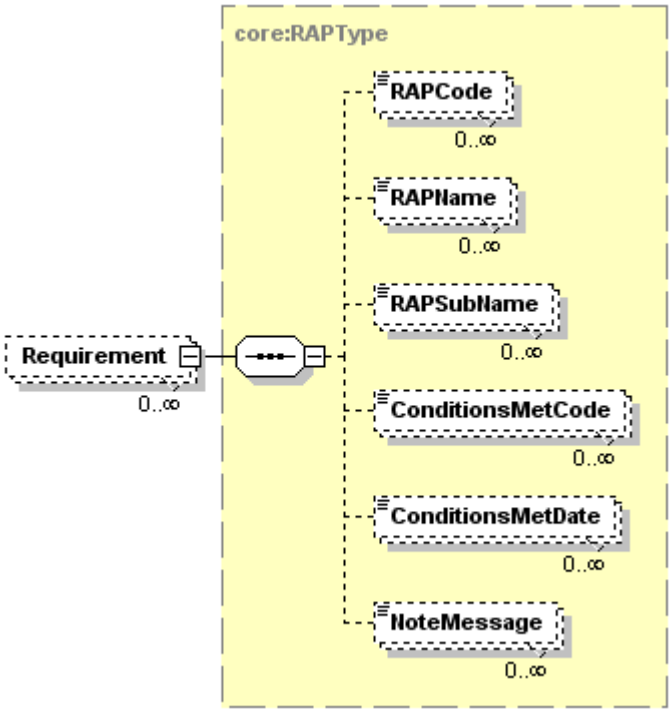

Tag Name	Schema Use	Description	Recommended Use	Format
RAPCode	Optional Repeatable	Requirement demonstrated or earned in addition to or as part of an academic award.	Recommended	minOcc 0 maxOcc ∞ minLength 1 maxLength 3
Comment: *If this data element is to be used effectively, a code set should be created by a state or region. An example is given below in the Code Illustration. If not, then User Defined Extensions would be an alternate method of including this information.*				
RAPName	Optional Repeatable	Literal name of requirement	Recommended	minOcc 0 maxOcc ∞ minLength 1 maxLength 60
RAPSubName	Optional Repeatable	Literal name of subsection of requirement	Optional	minOcc 0 maxOcc ∞ minLength 1 maxLength 60
ConditionsMetCode	Optional Repeatable	Indicates whether and how conditions for the requirement have been attained.	Recommended	minOcc 0 maxOcc ∞ **Enumerations:** Yes No Conditional MutuallyDefined
ConditionsMetDate	Optional Repeatable	Date requirement was met.	Optional	minOcc 0 maxOcc ∞ xs:date
Comment: *The format of date is ccyy-mm-dd.*				

Tag Name	Schema Use	Description	Recommended Use	Format
NoteMessage	Optional Repeatable	Additional information about the requirement	Not Recommended	minOcc 0 maxOcc ∞ minLength 1 maxLength 80
Comment: *For example, the Requirement part of Additional Student Achievements could be used to indicate that the student has met all the requirements for admission to a specific limited access program in the state university system.*				

Code illustration:

```
<Requirement>
    <RAPCode>9FL</RAPCode>
    <RAPName>FL-BS-Nursing-Admission-Rqmt</RAPName>
    <RAPSubName/>
    <ConditionsMetCode>Yes</ConditionsMetCode>
    <ConditionsMetDate>2002-08-13</ConditionsMetDate>
    <NoteMessage/>
</Requirement>
```

Student.AcademicRecord.AdditionalStudentAchievements.Attribute

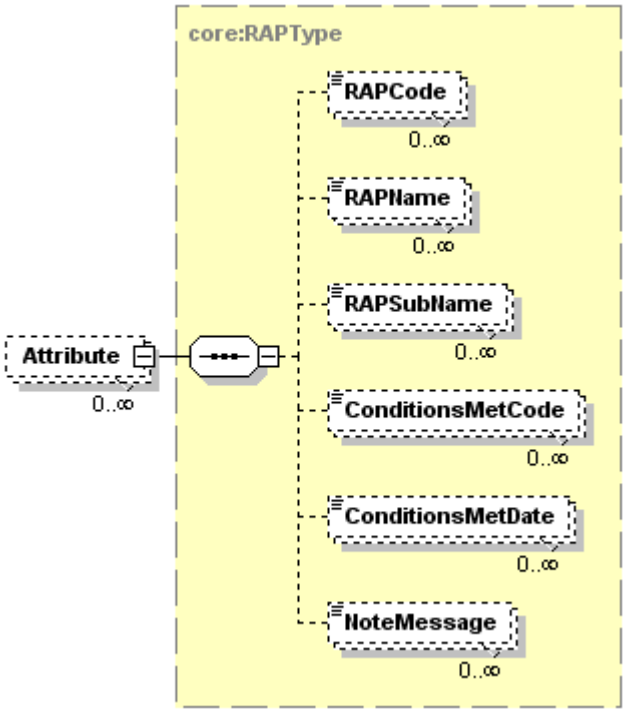

Tag Name	Schema Use	Description	Recommended Use	Format
RAPCode	Optional Repeatable	Attribute demonstrated or earned in addition to academic award.	Recommended	minOcc 0 maxOcc ∞ minLength 1 maxLength 3
Comment: *If this data element is to be used effectively, a code set should be created by a state or region. An example is given below in the Code Illustration. If not, then User Defined Extensions would be an alternate method of including this information.*				
RAPName	Optional Repeatable	Literal name of attribute	Recommended	minOcc 0 maxOcc ∞ minLength 1 maxLength 60
RAPSubName	Optional Repeatable	Literal name of subsection of attribute	Optional	minOcc 0 maxOcc ∞ minLength 1 maxLength 60
ConditionsMetCode	Optional Repeatable	Indicates whether and how conditions for certification have been attained.	Recommended	minOcc 0 maxOcc ∞ **Enumerations:** Yes No Conditional MutuallyDefined
ConditionsMetDate	Optional Repeatable	Date of attribute	Optional	minOcc 0 maxOcc ∞
Comment: *The format for date is ccyy-mm-dd.*				

Tag Name	Schema Use	Description	Recommended Use	Format
NoteMessage	Optional Repeatable	Additional information about the attribute	Not Recommended	minOcc 0 maxOcc ∞ minLength 1 maxLength 80
Comment: *For example, the Attribute part of the Additional Student Achievements could be used to indicate that the student was the first member of his or her family to complete a high school education.*				

Code illustration:

```
<Attribute>
    <RAPCode>9FL</RAPCode>
    <RAPName>FirstHSGraduateInFamily</RAPName>
    <RAPSubName/>
    <ConditionsMetCode>Yes</ConditionsMetCode>
    <ConditionsMetDate>1997-03-01</ConditionsMetDate>
    <NoteMessage/>
</Attribute>
```

Student.AcademicRecord.AdditionalStudentAchievements.Proficiency

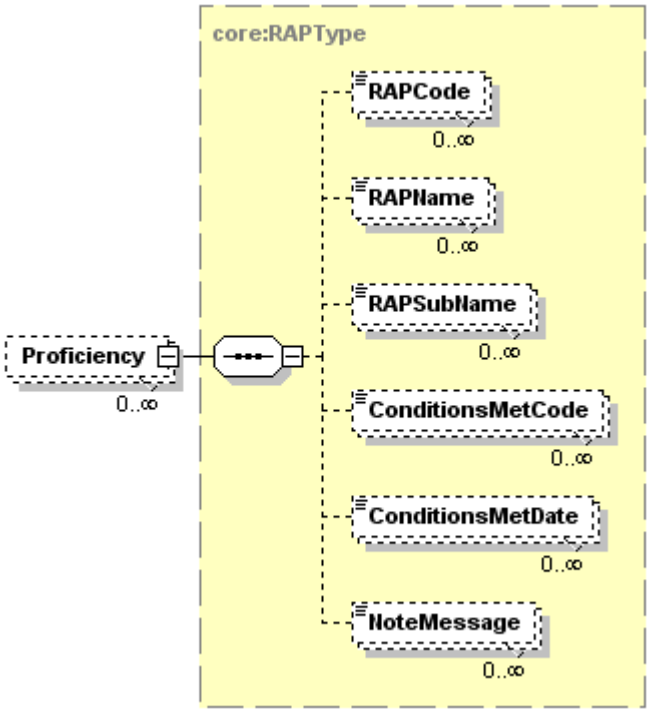

Tag Name	Schema Use	Description	Recommended Use	Format
RAPCode	Optional Repeatable	Proficiency demonstrated or earned in addition to academic award.	Recommended	minOcc 0 maxOcc ∞ minLength 1 maxLength 3
Comment: *If this data element is to be used effectively, a code set should be created by a state or region. An example is given below in the Code Illustration. If not, then User Defined Extensions would be an alternate method of including this information.*				
RAPName	Optional Repeatable	Literal name of proficiency	Recommended	minOcc 0 maxOcc ∞ minLength 1 maxLength 60
RAPSubName	Optional Repeatable	Literal name of subsection of proficiency	Optional	minOcc 0 maxOcc ∞ minLength 1 maxLength 60
ConditionsMetCode	Optional Repeatable	Indicates whether and how conditions for certification have been attained.	Recommended	minOcc 0 maxOcc ∞ **Enumerations:** Yes No Conditional MutuallyDefined
ConditionsMetDate	Optional Repeatable	Date of proficiency	Optional	minOcc 0 maxOcc ∞ xs:date
Comment: *The format for date is ccyy-mm-dd.*				

Tag Name	Schema Use	Description	Recommended Use	Format
NoteMessage	Optional Repeatable	Additional information about the proficiency	Not Recommended	minOcc 0 maxOcc ∞ minLength 1 maxLength 80
Comment: *For example, the Proficiency part of the Additional Student Achievements could be used to indicate the student is proficient in a musical instrument and demonstrated this by participating in the marching band.*				

Code illustration:

```
<Proficiency>
    <RAPCode>9FL</RAPCode>
    <RAPName>Music Proficiency</RAPName>
    <RAPSubName>Trombone</RAPSubName>
    <ConditionsMetCode>Yes</ConditionsMetCode>
    <ConditionsMetDate>2004-10-23</ConditionsMetDate>
    <NoteMessage >Student played in the school marching band.</NoteMessage>
</Proficiency>
```

Student.AcademicRecord.AdditionalStudentAchievements.Language

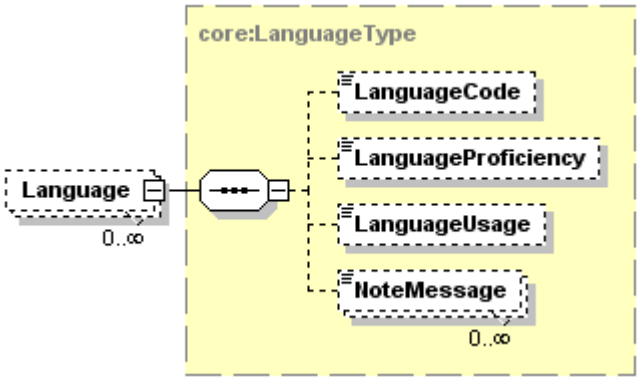

Tag Name	Schema Use	Description	Recommended Use	Format
LanguageCode	Optional	Code indicating the language being used, using ISO 639-2 code (Alpha-3) set. These codes are available at http://www.loc.gov/standards/iso639-2/	Recommended	minOcc 0 maxOcc 1 See codes in Appendix C1 or C2
LanguageProficiency	Optional	Adeptness in comprehending and using the language	Recommended	minOcc 0 maxOcc 1 **Enumerations:** Excellent Good Fair Poor Unacceptable Unknown
LanguageUsage	Optional	Indication of person's use of the language	Recommended	minOcc 0 maxOcc 1 **Enumerations:** SpokenAtHome Reading Writing Speaking Native
NoteMessage	Optional Repeatable	Additional information about the language proficiency	Not Recommended	minOcc 0 maxOcc ∞ minLength 1 maxLength 80
Comment: *This is the appropriate place in the Schema to indicate that a student is proficient in a language other than English.*				

Code illustration:

```
<Language>
    <LanguageCode>RUS</LanguageCode>
    <LanguageProficiency>Excellent</LanguageProficiency>
    <LanguageUsage>Speaking</LanguageUsage>
    <NoteMessage/>
</Language>
```

Student.AcademicRecord. AdditionalStudentAchievements.Licensure

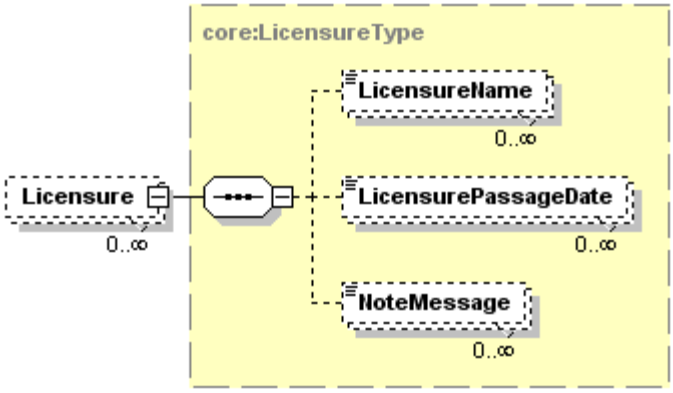

Tag Name	Schema Use	Description	Recommended Use	Format
LicensureName	Optional Repeatable	Free-form name of license or certification.	Optional	minOcc 0 maxOcc ∞ minLength 1 maxLength 60
LicensurePassageDate	Optional Repeatable	Date of licensure or certification passage	Optional	minOcc 0 maxOcc ∞ xs:date
Comment: *The format for date is ccyy-mm-dd.*				
NoteMessage	Optional Repeatable	Additional information about the licensure	Not Recommended	minOcc 0 maxOcc ∞ minLength 1 maxLength 80
Comment: *This would be unusual to appear on a transcript. However, if the student has received a licensure or certification that was not directly related to a course taken at the school, this would be the place to include it. Some unusual possibilities of this might be a certification in American Sign Language, Computer Repair, Life Saving, etc.*				

Code illustration:

```
<Licensure>
    <LicensureName>American Red Cross Life Saving Certification</LicensureName>
    <LicensurePassageDate>2004-05-20</LicensurePassageDate>
    <NoteMessage/>
</Licensure>
```

Student.Health

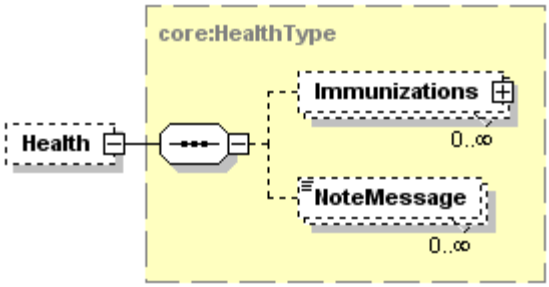

Tag Name	Schema Use	Description	Recommended Use	Format
Immunizations	Optional Repeatable	Information about immunizations	Recommended	minOcc 0 maxOcc ∞
Comment: *This complex data element will be expanded on page 217 which follows in this Guide.*				
NoteMessage	Optional Repeatable	Additional information about immunizations	Not Recommended	minOcc 0 maxOcc ∞ minLength 1 maxLength 80
Comment: *Since some schools are required to maintain immunization records, if the data are available, the inclusion of the data might assist the receiving institution in satisfying an immunization requirement at that school.*				

Code illustration:

```
<Health>
    <Immunizations>

    </Immunizations>
    <NoteMessage/>
</Health>
```

Student.Health.Immunizations

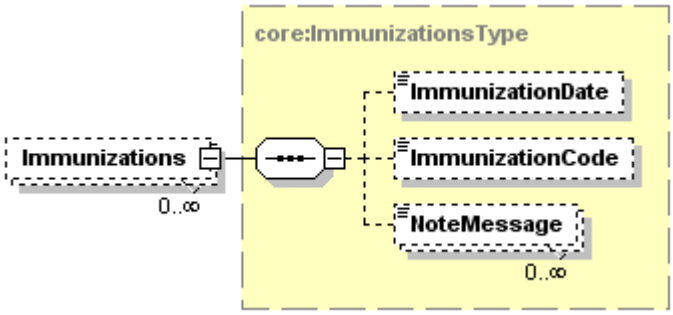

Tag Name	Schema Use	Description	Recommended Use	Format
ImmunizationDate	Optional	Date of immunization	Recommended	minOcc 0 maxOcc 1 xs:date
Comment: *The format for date is ccyy-mm-dd.*				
ImmunizationCode	Optional	Medical immunization or vaccine code from the Current Procedural Terminology (CPT) 2002 of the American Medical Association.	Recommended	minOcc 0 maxOcc 1 minLength 1 maxLength 20
NoteMessage	Optional Repeatable	Additional information about the immunization	Not Recommended	minOcc 0 maxOcc ∞ minLength 1 maxLength 80

Code illustration:

```
<Immunizations>
    <ImmunizationDate>2005-04-30</ImmunizationDate>
    <ImmunizationCode>90705</ImmunizationCode>
    <NoteMessage/>
</Immunizations>
```

Student.Tests

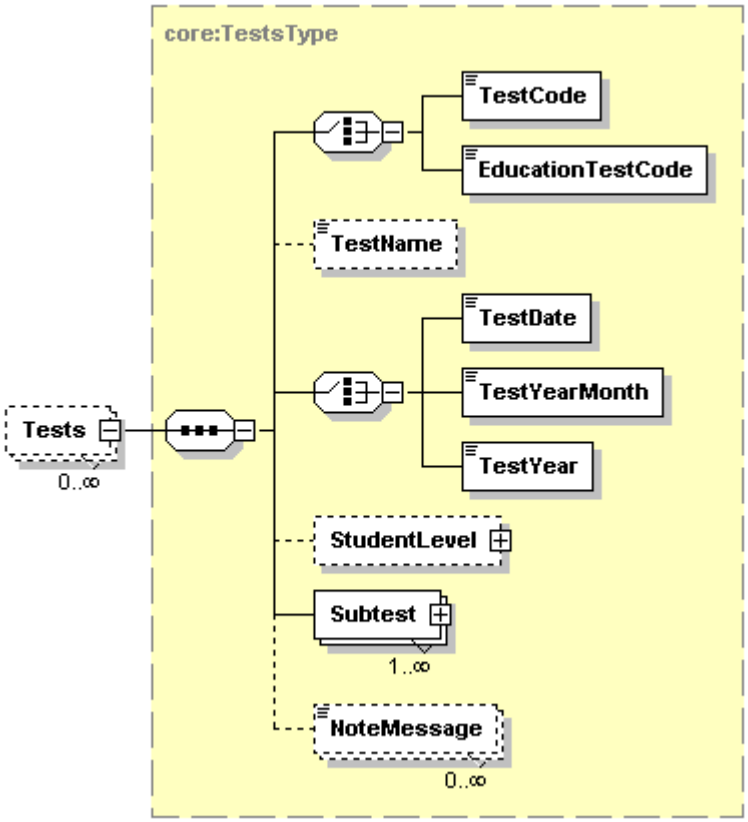

Tag Name	Schema Use	Description	Recommended Use	Format
TestCode	Required Choice	Code identifying the test using the older codes used for EDI since the mid 1990's	Not Recommended	minOcc 1 maxOcc 1 See Appendix D
EducationTestCode	Required Choice	Code identifying the test using the newer codes created for XML in 2008	Recommended	minOcc 1 maxOcc 1 See Appendix E
Comment: *A code from one of the two code sets above must be included in the instance document.*				
TestName	Optional	Name identifying the test	Recommended	minOcc 0 maxOcc 1 See Appendix D or E
TestDate	Required choice	Date of the test	Required (use one)	minOcc 1 maxOcc 1 xs:date
Comment: *Use this choice if the exact date of the test is known. Format for date is ccyy-mm-dd.*				
TestYearMonth	Required choice	Date of the test	Required (use one)	minOcc 1 maxOcc 1 g:YearMonth with format ccyy-mm
Comment: *Use this choice if only the year and the month of the test are known.*				

Tag Name	Schema Use	Description	Recommended Use	Format
TestYear	Required choice	Date of the test	Required (use one)	minOcc 1 maxOcc 1 g:Year with format ccyy
Comment: *Use this choice if only the year of the test is known.*				
Comment: *If you include the complex data element "Tests" in the Schema, then you must include one of the above three date formats.*				
StudentLevel	Optional	The classification of the student at the time the student took the test	Optional	minOcc 0 maxOcc 1
Comment: *This complex data element will be expanded on page 220 which follows.*				
Subtest	Required Repeatable	Subdivision of a standardized test (including the score)	Required	minOcc 1 maxOcc ∞
Comment: *This complex data element will be expanded on page 221 which follows.*				
NoteMessage	Optional Repeatable	Additional information about the test	Not Recommended	minOcc 0 maxOcc ∞ minLength 1 maxLength 80

Code illustration:

```
<Tests>
    <EducationTestCode>SAT</EducationTestCode>
    <TestName>The College Board's Scholastic Aptitude Test (SAT 1)</TestName>
    <TestYearMonth>1988-04</TestYearMonth>
    <StudentLevel>

    </StudentLevel>
    <Subtest>

    </Subtest>
    <NoteMessage/>
</Tests>
```

Student.Tests.StudentLevel

Note: Although the complex data element StudentLevel is an optional data element, if you choose to send the StudentLevel for the test, then you must send the StudentLevelCode.

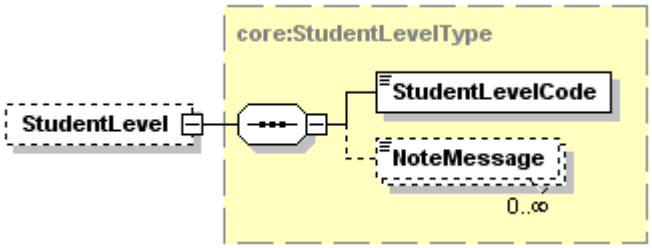

Tag Name	Schema Use	Description	Recommended Use	Format
StudentLevelCode	Required	The classification of the student at the time the student took the test	Required	minOcc 1 maxOcc 1 **Enumerations:** NinthGrade TenthGrade EleventhGrade TwelfthGrade Postsecondary PostsecondaryBachelorPreliminaryYear NonDegree CollegeFirstYear CollegeFirstYearAttendedBefore CollegeSophomore CollegeJunior CollegeSenior CollegeFifthYear PostBaccalaureate GraduateNonDegree GraduateFirstYear GraduateSecondYear GraduateThirdYear GraduateBeyondThirdYear Professional ProfessionalFirstYear ProfessionalSecondYear ProfessionalThirdYear ProfessionalBeyondThirdYear MastersQualifying Masters Doctoral Postdoctoral
NoteMessage	Optional Repeatable	Additional information about the student level	Not Recommended	minOcc 0 maxOcc ∞ minLength 1 maxLength 80

Code illustration:

```
<StudentLevel>
    <StudentLevelCode>CollegeFirstYear</StudentLevelCode>
    <NoteMessage/>
</StudentLevel>
```

Student.Tests.Subtest

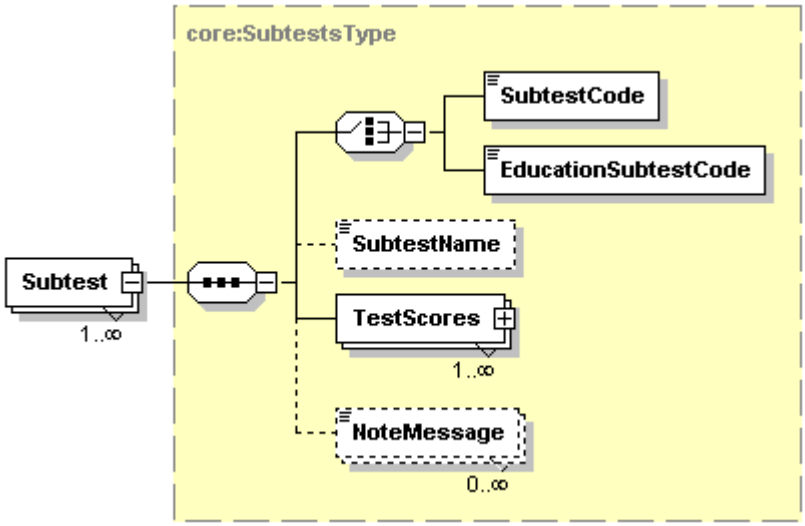

Tag Name	Schema Use	Description	Recommended Use	Format
SubtestCode	Required Choice	Code identifying the sub-part of a standardized test (e.g. Quantitative, Verbal). This code set is from the older EDI code set created in the early 1990's	Not Recommended	minOcc 1 maxOcc 1 See Appendix F
EducationSubtestCode	Required Choice	Code identifying the sub-part of a standardized test (e.g. Quantitative, Verbal). This code set is from the newer code set created in 2008 for use with XML schemas	Recommended	minOcc 1 maxOcc 1 See Appendix G
Comment: *If you include the complex data element "Tests", then you must include one of the two data elements above.*				
SubtestName	Optional	Name of the sub-part of a standardized test	Recommended	minOcc 0 maxOcc 1 See Appendix F or G
TestScores	Required Repeatable	The score received on the test	Required	minOcc 1 maxOcc ∞
Comment: *This complex data element will be expanded on page 222 which follows in this Guide.*				
NoteMessage	Optional Repeatable	Additional information about the subtest	Not Recommended	minOcc 0 maxOcc ∞ minLength 1 maxLength 80

Code illustration:

```
<Subtest>
    <EducationSubtestCode>Verbal</EducationSubtestCode>
    <SubtestName>Verbal</SubtestName>
    <TestScores>

    </TestScores>
    <NoteMessage/>
</Subtest>
```

Student.Tests.Subtest.TestScores

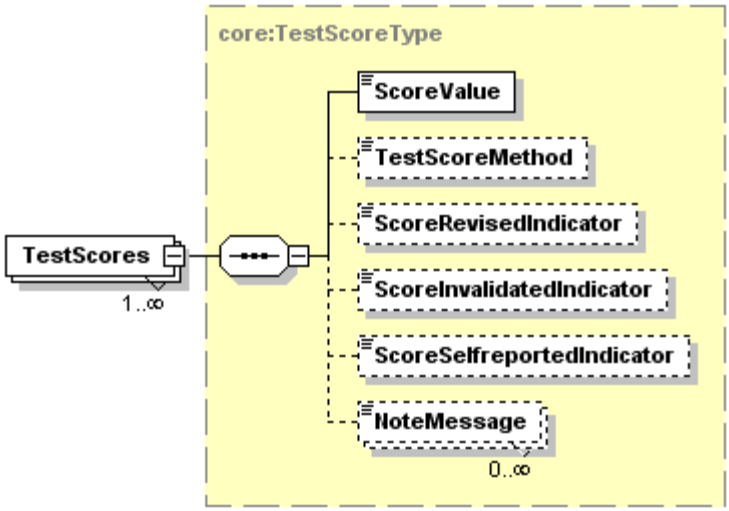

Tag Name	Schema Use	Description	Recommended Use	Format
ScoreValue	Required	The actual value of the score received on the test	Required	minOcc 1 maxOcc 1 minLength 1 maxLength 80
TestScoreMethod	Optional	Code identifying the method used to measure and report the test scores. *Scaled* - Scaled Score *Graded* - Grade Equivalent or Grade Level Indicator *Standard* - Standard Score *Raw* - Raw Score *Percent* - Percent of Items Correct *Mastery* - Mastery Score *Adjective* - Adjective Classification or Locally Defined Score *Stanine* - Stanine *Percentile* - Percentile *NormalCurve* - Normal Curve Equivalent *Equated* - Equated Score (pre-test and post-test were different) *Local* - Locally Defined	Optional	minOcc 0 maxOcc 1 **Enumerations:** Scaled Graded Standard Raw Percent Mastery Adjective Stanine Percentile NormalCurve Equated Local
ScoreRevisedIndicator	Optional	Indicates if the score report has been revised. If true, score may differ from score previously reported for this test and test date.	Optional	minOcc 0 maxOcc 1 true false
Comment: *If this is a revision of a previous score report, then include the data element with a value of "true". If it is not a revised score report, do not include this data element.*				

Tag Name	Schema Use	Description	Recommended Use	Format
ScoreInvalidatedIndicator	Optional	Indicates if the score has been invalidated. If true, score previously reported for this test and test date is not valid.	Optional	minOcc 0 maxOcc 1 true false
Comment: *If this score report is reporting that the test score has been invalidated, then include the data element with a value of "true". If not, then do not include this data element.*				
ScoreSelfreportedIndicator	Optional	Indicates if the score has been self-reported by the student.	Optional	minOcc 0 maxOcc 1 true false
Comment: *If this is a score report that was self reported by the student, then include the data element with a value of "true". If not, then do not include this data element.*				
NoteMessage	Optional Repeatable	Additional information about the test score	Not Recommended	minOcc 0 maxOcc ∞ minLength 1 maxLength 80

Code illustration:

```
<TestScores>
    <ScoreValue>25</ScoreValue>
    <TestScoreMethod>Scaled</TestScoreMethod>
    <ScoreRevisedIndicator>true</ScoreRevisedIndicator>
    <ScoreInvalidatedIndicator/>
    <ScoreSelfreportedIndicator/>
    <NoteMessage/>
</TestScores>
```

End of PESC XML College Transcript Schema

Appendix A State and Province Codes Sorted by State and Province Codes	
State and Province Code	**State and Province Name**
AA	Military – Americas
AB	Alberta
AE	Military – Europe
AK	Alaska
AL	Alabama
AP	Military – Pacific
AR	Arkansas
AS	American Samoa
AZ	Arizona
BC	British Columbia
CA	California
CO	Colorado
CT	Connecticut
CZ	Canal Zone
DC	District of Columbia
DE	Delaware
FL	Florida
FM	Federated States of Micronesia
GA	Georgia
GU	Guam
HI	Hawaii
IA	Iowa
ID	Idaho
IL	Illinois
IN	Indiana
KS	Kansas
KY	Kentucky
LA	Louisiana
MA	Massachusetts
MB	Manitoba
MD	Maryland
ME	Maine
MH	Marshall Islands
MI	Michigan
MN	Minnesota
MO	Missouri
MP	Northern Mariana Islands
MS	Mississippi

Appendix A State and Province Codes Sorted by State and Province Codes	
State and Province Code	**State and Province Name**
MT	Montana
NB	New Brunswick
NC	North Carolina
ND	North Dakota
NE	Nebraska
NF	Newfoundland
NH	New Hampshire
NJ	New Jersey
NL	Newfoundland and Labrador
NM	New Mexico
NS	Nova Scotia
NT	Northwest Territories
NU	Nunavut
NV	Nevada
NY	New York
OH	Ohio
OK	Oklahoma
ON	Ontario
OR	Oregon
PA	Pennsylvania
PE	Prince Edward Island
PR	Puerto Rico
PW	Republic of Palau
QC	Quebec
RI	Rhode Island
SC	South Carolina
SD	South Dakota
SK	Saskatchewan
TN	Tennessee
TX	Texas
UT	Utah
VA	Virginia
VI	Virgin Islands
VT	Vermont
WA	Washington
WI	Wisconsin
WV	West Virginia
WY	Wyoming
YT	Yukon

Appendix B1
Country Codes
ISO 3166-1 Alpha-2 Standard (as of April 2007)
Not to be used for US SEVIS Purposes
Sorted by Code

CountryCode	Description
AD	Andorra
AE	United Arab Emirates
AF	Afghanistan
AG	Antigua And Barbuda
AI	Anguilla
AL	Albania
AM	Armenia
AN	Netherlands Antilles
AO	Angola
AQ	Antarctica
AR	Argentina
AS	American Samoa
AT	Austria
AU	Australia
AW	Aruba
AX	Åland Islands
AZ	Azerbaijan
BA	Bosnia And Herzegovina
BB	Barbados
BD	Bangladesh
BE	Belgium
BF	Burkina Faso
BG	Bulgaria
BH	Bahrain
BI	Burundi
BJ	Benin
BM	Bermuda
BN	Brunei Darussalam
BO	Bolivia
BR	Brazil
BS	Bahamas
BT	Bhutan
BV	Bouvet Island
BW	Botswana
BY	Belarus
BZ	Belize
CA	Canada
CC	Cocos (Keeling) Islands
CD	Congo, The Democratic Republic Of The
CF	Central African Republic
CG	Congo

Appendix B1
Country Codes
ISO 3166-1 Alpha-2 Standard (as of April 2007)
Not to be used for US SEVIS Purposes
Sorted by Code

CountryCode	Description
CH	Switzerland
CI	Cote D'ivoire
CK	Cook Islands
CL	Chile
CM	Cameroon
CN	China
CO	Colombia
CR	Costa Rica
CS	Serbia And Montenegro (Deleted as of April 2007 – see ME and RS) *
CU	Cuba
CV	Cape Verde
CX	Christmas Island
CY	Cyprus
CZ	Czech Republic
DE	Germany
DJ	Djibouti
DK	Denmark
DM	Dominica
DO	Dominican Republic
DZ	Algeria
EC	Ecuador
EE	Estonia
EG	Egypt
EH	Western Sahara
ER	Eritrea
ES	Spain
ET	Ethiopia
FI	Finland
FJ	Fiji
FK	Falkland Islands (Malvinas)
FM	Micronesia, Federated States Of
FO	Faroe Islands
FR	France
GA	Gabon
GB	United Kingdom
GD	Grenada
GE	Georgia
GF	French Guiana
GG	Guernsey *
GH	Ghana
GI	Gibraltar

Appendix B1
Country Codes
ISO 3166-1 Alpha-2 Standard (as of April 2007)
Not to be used for US SEVIS Purposes
Sorted by Code

CountryCode	Description
GL	Greenland
GM	Gambia
GN	Guinea
GP	Guadeloupe
GQ	Equatorial Guinea
GR	Greece
GS	South Georgia And The South Sandwich Islands
GT	Guatemala
GU	Guam
GW	Guinea Bissau
GY	Guyana
HK	Hong Kong
HM	Heard Island And Mcdonald Islands
HN	Honduras
HR	Croatia
HT	Haiti
HU	Hungary
ID	Indonesia
IE	Ireland
IL	Israel
IM	Isle of Man *
IN	India
IO	British Indian Ocean Territory
IQ	Iraq
IR	Iran, Islamic Republic Of
IS	Iceland
IT	Italy
JE	Jersey *
JM	Jamaica
JO	Jordan
JP	Japan
KE	Kenya
KG	Kyrgyzstan
KH	Cambodia
KI	Kiribati
KM	Comoros
KN	Saint Kitts And Nevis
KP	Korea, Democratic People's Republic Of
KR	Korea, Republic Of
KW	Kuwait
KY	Cayman Islands

Appendix B1
Country Codes
ISO 3166-1 Alpha-2 Standard (as of April 2007)
Not to be used for US SEVIS Purposes
Sorted by Code

CountryCode	Description
KZ	Kazakhstan
LA	Lao People's Democratic Republic
LB	Lebanon
LC	Saint Lucia
LI	Liechtenstein
LK	Sri Lanka
LR	Liberia
LS	Lesotho
LT	Lithuania
LU	Luxembourg
LV	Latvia
LY	Libyan Arab Jamahiriya
MA	Morocco
MC	Monaco
MD	Moldova, Republic Of
ME	Montenegro *
MG	Madagascar
MH	Marshall Islands
MK	Macedonia, The Former Yugoslav Republic Of
ML	Mali
MM	Myanmar
MN	Mongolia
MO	Macao
MP	Northern Mariana Islands
MQ	Martinique
MR	Mauritania
MS	Montserrat
MT	Malta
MU	Mauritius
MV	Maldives
MW	Malawi
MX	Mexico
MY	Malaysia
MZ	Mozambique
NA	Namibia
NC	New Caledonia
NE	Niger
NF	Norfolk Island
NG	Nigeria
NI	Nicaragua
NL	Netherlands

Appendix B1
Country Codes
ISO 3166-1 Alpha-2 Standard (as of April 2007)
Not to be used for US SEVIS Purposes
Sorted by Code

CountryCode	Description
NO	Norway
NP	Nepal
NR	Nauru
NU	Niue
NZ	New Zealand
OM	Oman
PA	Panama
PE	Peru
PF	French Polynesia
PG	Papua New Guinea
PH	Philippines
PK	Pakistan
PL	Poland
PM	Saint Pierre And Miquelon
PN	Pitcairn
PR	Puerto Rico
PS	Palestinian Territory, Occupied
PT	Portugal
PW	Palau
PY	Paraguay
QA	Qatar
RE	Reunion
RO	Romania
RS	Serbia *
RU	Russian Federation
RW	Rwanda
SA	Saudi Arabia
SB	Solomon Islands
SC	Seychelles
SD	Sudan
SE	Sweden
SG	Singapore
SH	Saint Helena
SI	Slovenia
SJ	Svalbard And Jan Mayen
SK	Slovakia
SL	Sierra Leone
SM	San Marino
SN	Senegal
SO	Somalia
SR	Suriname

Appendix B1
Country Codes
ISO 3166-1 Alpha-2 Standard (as of April 2007)
Not to be used for US SEVIS Purposes
Sorted by Code

CountryCode	Description
ST	Sao Tome And Principe
SV	El Salvador
SY	Syrian Arab Republic
SZ	Swaziland
TC	Turks And Caicos Islands
TD	Chad
TF	French Southern Territories
TG	Togo
TH	Thailand
TJ	Tajikistan
TK	Tokelau
TL	Timor Leste
TM	Turkmenistan
TN	Tunisia
TO	Tonga
TR	Turkey
TT	Trinidad And Tobago
TV	Tuvalu
TW	Taiwan, Province Of China
TZ	Tanzania, United Republic Of
UA	Ukraine
UG	Uganda
UM	United States Minor Outlying Islands
US	United States
UY	Uruguay
UZ	Uzbekistan
VA	Holy See (Vatican City State)
VC	Saint Vincent And The Grenadines
VE	Venezuela
VG	Virgin Islands, British
VI	Virgin Islands, U.S.
VN	Viet Nam
VU	Vanuatu
WF	Wallis And Futuna
WS	Samoa
YE	Yemen
YT	Mayotte
ZA	South Africa
ZM	Zambia
ZW	Zimbabwe

- **Updated as of April 2007**

Appendix B2
Country Codes
ISO 3166-1 Alpha-2 Standard (as of April 2007)
Not to be used for US SEVIS Purposes
Sorted by Country Name

CountryCode	Description
AF	Afghanistan
AX	Åland Islands
AL	Albania
DZ	Algeria
AS	American Samoa
AD	Andorra
AO	Angola
AI	Anguilla
AQ	Antarctica
AG	Antigua And Barbuda
AR	Argentina
AM	Armenia
AW	Aruba
AU	Australia
AT	Austria
AZ	Azerbaijan
BS	Bahamas
BH	Bahrain
BD	Bangladesh
BB	Barbados
BY	Belarus
BE	Belgium
BZ	Belize
BJ	Benin
BM	Bermuda
BT	Bhutan
BO	Bolivia
BA	Bosnia And Herzegovina
BW	Botswana
BV	Bouvet Island
BR	Brazil
IO	British Indian Ocean Territory
BN	Brunei Darussalam
BG	Bulgaria
BF	Burkina Faso
BI	Burundi
KH	Cambodia
CM	Cameroon
CA	Canada
CV	Cape Verde

Appendix B2
Country Codes
ISO 3166-1 Alpha-2 Standard (as of April 2007)
Not to be used for US SEVIS Purposes
Sorted by Country Name

CountryCode	Description
KY	Cayman Islands
CF	Central African Republic
TD	Chad
CL	Chile
CN	China
CX	Christmas Island
CC	Cocos (Keeling) Islands
CO	Colombia
KM	Comoros
CG	Congo
CD	Congo, The Democratic Republic Of The
CK	Cook Islands
CR	Costa Rica
CI	Cote D'ivoire
HR	Croatia
CU	Cuba
CY	Cyprus
CZ	Czech Republic
DK	Denmark
DJ	Djibouti
DM	Dominica
DO	Dominican Republic
EC	Ecuador
EG	Egypt
SV	El Salvador
GQ	Equatorial Guinea
ER	Eritrea
EE	Estonia
ET	Ethiopia
FK	Falkland Islands (Malvinas)
FO	Faroe Islands
FJ	Fiji
FI	Finland
FR	France
GF	French Guiana
PF	French Polynesia
TF	French Southern Territories
GA	Gabon
GM	Gambia
GE	Georgia
DE	Germany

Appendix B2
Country Codes
ISO 3166-1 Alpha-2 Standard (as of April 2007)
Not to be used for US SEVIS Purposes
Sorted by Country Name

CountryCode	Description
GH	Ghana
GI	Gibraltar
GR	Greece
GL	Greenland
GD	Grenada
GP	Guadeloupe
GU	Guam
GT	Guatemala
GG	Guernsey *
GN	Guinea
GW	Guinea Bissau
GY	Guyana
HT	Haiti
HM	Heard Island And Mcdonald Islands
VA	Holy See (Vatican City State)
HN	Honduras
HK	Hong Kong
HU	Hungary
IS	Iceland
IN	India
ID	Indonesia
IR	Iran, Islamic Republic Of
IQ	Iraq
IE	Ireland
IM	Isle of Man *
IL	Israel
IT	Italy
JM	Jamaica
JP	Japan
JE	Jersey *
JO	Jordan
KZ	Kazakhstan
KE	Kenya
KI	Kiribati
KP	Korea, Democratic People's Republic Of
KR	Korea, Republic Of
KW	Kuwait
KG	Kyrgyzstan
LA	Lao People's Democratic Republic
LV	Latvia
LB	Lebanon

Appendix B2
Country Codes
ISO 3166-1 Alpha-2 Standard (as of April 2007)
Not to be used for US SEVIS Purposes
Sorted by Country Name

CountryCode	Description
LS	Lesotho
LR	Liberia
LY	Libyan Arab Jamahiriya
LI	Liechtenstein
LT	Lithuania
LU	Luxembourg
MO	Macao
MK	Macedonia, The Former Yugoslav Republic Of
MG	Madagascar
MW	Malawi
MY	Malaysia
MV	Maldives
ML	Mali
MT	Malta
MH	Marshall Islands
MQ	Martinique
MR	Mauritania
MU	Mauritius
YT	Mayotte
MX	Mexico
FM	Micronesia, Federated States Of
MD	Moldova, Republic Of
MC	Monaco
MN	Mongolia
ME	Montenegro *
MS	Montserrat
MA	Morocco
MZ	Mozambique
MM	Myanmar
NA	Namibia
NR	Nauru
NP	Nepal
NL	Netherlands
AN	Netherlands Antilles
NC	New Caledonia
NZ	New Zealand
NI	Nicaragua
NE	Niger
NG	Nigeria
NU	Niue
NF	Norfolk Island

Appendix B2
Country Codes
ISO 3166-1 Alpha-2 Standard (as of April 2007)
Not to be used for US SEVIS Purposes
Sorted by Country Name

CountryCode	Description
MP	Northern Mariana Islands
NO	Norway
OM	Oman
PK	Pakistan
PW	Palau
PS	Palestinian Territory, Occupied
PA	Panama
PG	Papua New Guinea
PY	Paraguay
PE	Peru
PH	Philippines
PN	Pitcairn
PL	Poland
PT	Portugal
PR	Puerto Rico
QA	Qatar
RE	Reunion
RO	Romania
RU	Russian Federation
RW	Rwanda
SH	Saint Helena
KN	Saint Kitts And Nevis
LC	Saint Lucia
PM	Saint Pierre And Miquelon
VC	Saint Vincent And The Grenadines
WS	Samoa
SM	San Marino
ST	Sao Tome And Principe
SA	Saudi Arabia
SN	Senegal
RS	Serbia *
CS	Serbia And Montenegro (Deleted as of April 2007 – see ME and RS) *
SC	Seychelles
SL	Sierra Leone
SG	Singapore
SK	Slovakia
SI	Slovenia
SB	Solomon Islands
SO	Somalia
ZA	South Africa
GS	South Georgia And The South Sandwich Islands

Appendix B2
Country Codes
ISO 3166-1 Alpha-2 Standard (as of April 2007)
Not to be used for US SEVIS Purposes
Sorted by Country Name

CountryCode	Description
ES	Spain
LK	Sri Lanka
SD	Sudan
SR	Suriname
SJ	Svalbard And Jan Mayen
SZ	Swaziland
SE	Sweden
CH	Switzerland
SY	Syrian Arab Republic
TW	Taiwan, Province Of China
TJ	Tajikistan
TZ	Tanzania, United Republic Of
TH	Thailand
TL	Timor Leste
TG	Togo
TK	Tokelau
TO	Tonga
TT	Trinidad And Tobago
TN	Tunisia
TR	Turkey
TM	Turkmenistan
TC	Turks And Caicos Islands
TV	Tuvalu
UG	Uganda
UA	Ukraine
AE	United Arab Emirates
GB	United Kingdom
US	United States
UM	United States Minor Outlying Islands
UY	Uruguay
UZ	Uzbekistan
VU	Vanuatu
VE	Venezuela
VN	Viet Nam
VG	Virgin Islands, British
VI	Virgin Islands, U.S.
WF	Wallis And Futuna
EH	Western Sahara
YE	Yemen
ZM	Zambia
ZW	Zimbabwe

*** Updated as of April 2007**

Appendix C1: ISO 639-2 Language Codes http://www.loc.gov/standards/iso639-2/php/code_list.php Sorted by Language Code	
Language Code	**Description**
AAR	Afar
ABK	Abkhazian
ACE	Achinese
ACH	Acoli
ADA	Adangme
ADY	Adyghe; Adygei
AFA	Afro-Asiatic (Other)
AFH	Afrihili
AFR	Afrikaans
AIN	Ainu
AKA	Akan
AKK	Akkadian
ALB	Albanian
ALE	Aleut
ALG	Algonquian Languages
ALT	Southern Altai
AMH	Amharic
ANG	English, Old (ca. 450-1100)
ANP	Angika
APA	Apache Languages
ARA	Arabic
ARC	Aramaic (700-300 BCE); Imperial Aramaic (700-300 BCE)
ARG	Aragonese
ARM	Armenian
ARN	Mapudungun; Mapuche
ARP	Arapaho
ART	Artificial (Other)
ARW	Arawak
ASM	Assamese
AST	Asturian; Bable
ATH	Athapascan Languages
AUS	Australian Languages

Appendix C1: ISO 639-2 Language Codes http://www.loc.gov/standards/iso639-2/php/code_list.php Sorted by Language Code	
Language Code	**Description**
AVA	Avaric
AVE	Avestan
AWA	Awadhi
AYM	Aymara
AZE	Azerbaijani
BAD	Banda Languages
BAI	Bamileke Languages
BAM	Bambara
BAN	Balinese
BAQ	Basque
BAS	Basa
BAT	Baltic (Other)
BEJ	Beja
BEL	Belarusian
BEM	Bemba
BEN	Bengali
BER	Berber (Other)
BHO	Bhojpuri
BIH	Bihari
BIK	Bikol
BIN	Bini; Edo
BIS	Bislama
BLA	Siksika
BNT	Bantu (Other)
BOD	Tibetan
BOS	Bosnian
BRA	BRAJ
BRE	Breton
BTK	Batak Languages
BUA	Buriat
BUG	Buginese
BUL	Bulgarian

Appendix C1: ISO 639-2 Language Codes http://www.loc.gov/standards/iso639-2/php/code_list.php Sorted by Language Code	
Language Code	**Description**
BYN	Bilin; Blin
CAD	Caddo
CAI	Central American Indian (Other)
CAR	Galibi Carib
CAT	Catalan; Valencian
CAU	Caucasian (Other)
CEB	Cebuano
CEL	Celtic (Other)
CES	Czech
CHA	Chamorro
CHB	Chibcha
CHE	Chechen
CHG	Chagatai
CHI	Chinese
CHK	Chuukese
CHM	Mari
CHN	Chinook Jargon
CHO	Choctaw
CHP	Chipewyan
CHR	Cherokee
CHU	Church Slavic; Old Slavonic; Church Slavonic; Old Bulgarian; Old Church Slavonic
CHV	Chuvash
CHY	Cheyenne
CMC	Chamic Languages
COP	Coptic
COR	Cornish
COS	Corsican
CPE	Creoles and Pidgins, English Based (Other)
CPF	Creoles and Pidgins, French Based (Other)
CPP	Creoles and Pidgins, Portuguese Based (Other)
CRE	Cree
CRH	Crimean Tatar; Crimean Turkish

Appendix C1: ISO 639-2 Language Codes http://www.loc.gov/standards/iso639-2/php/code_list.php Sorted by Language Code	
Language Code	**Description**
CRP	Creoles and Pidgins (Other)
CSB	Kashubian
CUS	Cushitic (Other)
CYM	Welsh
CZE	Czech
DAK	Dakota
DAN	Danish
DAR	Dargwa
DAY	Dayak (Land) Languages
DEL	Delaware
DEN	Slave (Athapascan)
DEU	German
DGR	Dogrib
DIN	Dinka
DIV	Divehi; Dhivehi; Maldivian
DOI	Dogri
DRA	Dravidian (Other)
DSB	Lower Sorbian
DUA	Duala
DUM	Dutch, Middle (ca. 1050–1350)
DUT	Dutch; Flemish
DYU	Dyula
DZO	Dzongkha
EFI	Efik
EGY	Egyptian (Ancient)
EKA	Ekajuk
ELL	Greek, Modern (1453-)
ELX	Elamite
ENG	English
ENM	English, Middle (1100-1500)
EPO	Esperanto
EST	Estonian

Appendix C1: ISO 639-2 Language Codes http://www.loc.gov/standards/iso639-2/php/code_list.php Sorted by Language Code	
Language Code	**Description**
EUS	Basque
EWE	Ewe
EWO	Ewondo
FAN	Fang
FAO	Faroese
FAS	Persian
FAT	Fanti
FIJ	Fijian
FIL	Filipino; Pilipino
FIN	Finnish
FIU	Finno-Ugrian (Other)
FON	Fon
FRA	French
FRE	French
FRM	French, Middle (ca. 1400-1600)
FRO	French, Old (842-ca. 1400)
FRR	Frisian, Northern
FRS	Frisian, Eastern
FRY	Frisian, Western
FUL	Fulah
FUR	Friulian
GAA	Ga
GAY	Gayo
GBA	Gbaya
GEM	Germanic (Other)
GEO	Georgian
GER	German
GEZ	Geez
GIL	Gilbertese
GLA	Gaelic; Scottish Gaelic
GLE	Irish
GLG	Galician

Appendix C1: ISO 639-2 Language Codes http://www.loc.gov/standards/iso639-2/php/code_list.php Sorted by Language Code	
Language Code	**Description**
GLV	Manx
GMH	German, Middle High (ca.1050-1500)
GOH	German, Old High (ca. 750-1050)
GON	Gondi
GOR	Gorontalo
GOT	Gothic
GRB	Grebo
GRC	Greek, Ancient (to 1453)
GRE	Greek, Modern (1453-)
GRN	Guarani
GSW	Swiss German, Alemannic
GUJ	Gujarati
GWI	Gwich'in
HAI	Haida
HAT	Taitian; Haitian Creole
HAU	Hausa
HAW	Hawaiian
HEB	Hebrew
HER	Herero
HIL	Hiligaynon
HIM	Himigaynon
HIN	Hindi
HIT	Hittite
HMN	Hmong
HMO	Hiri Motu
HRV	Croatian
HSB	Sorbian (Upper)
HUN	Hungarian
HUP	Hupa
HYE	Armenian
IBA	Iban
IBO	Igbo

Appendix C1: ISO 639-2 Language Codes http://www.loc.gov/standards/iso639-2/php/code_list.php Sorted by Language Code	
Language Code	**Description**
ICE	Icelandic
IDO	Ido
III	Sichuan Yi
IJO	Ijo Languages
IKU	Inuktitut
ILE	Interlingue
ILO	Iloko
INA	Interlingua (International Auxiliary Language Association)
INC	Indic (Other)
IND	Indonesian
INE	Indo-European (Other)
INH	Ingush
IPK	Inupiaq
IRA	Iranian (Other)
IRO	Iroquoian Languages
ISL	Icelandic
ITA	Italian
JAV	Javanese
JBO	Lojban
JPN	Japanese
JPR	Judeo-Persian
JRB	Judeo-Arabic
KAA	Kara-Kalpak
KAB	Kabyle
KAC	Kachin; Jingpho
KAL	Greenlandic; Kalaallisut
KAM	Kamba
KAN	Kannada
KAR	Karen Languages
KAS	Kashmiri
KAT	Georgian
KAU	Kanuri

Appendix C1: ISO 639-2 Language Codes http://www.loc.gov/standards/iso639-2/php/code_list.php Sorted by Language Code	
Language Code	**Description**
KAW	Kawi
KAZ	Kazakh
KBD	Kabardian
KHA	Khasi
KHI	Khoisan (Other)
KHM	Khmer (Central)
KHO	Khotanese
KIK	Kikuyu; Gikuyu
KIN	Kinyarwanda
KIR	Kirghiz; Kyrgyz
KMB	Kimbundu
KOK	Konkani
KOM	Komi
KON	Kongo
KOR	Korean
KOS	Kosraean
KPE	Kpelle
KRC	Karachay-Balkar
KRL	Karelian
KRO	Kru Languages
KRU	Kurukh
KUA	Kuanyama; Kwanyama
KUM	Kumyk
KUR	Kurdish
KUT	Kutenai
LAD	Ladino
LAH	Lahnda
LAM	Lamba
LAO	Lao
LAT	Latin
LAV	Latvian
LEZ	Lezghian

Appendix C1: ISO 639-2 Language Codes http://www.loc.gov/standards/iso639-2/php/code_list.php Sorted by Language Code	
Language Code	**Description**
LIM	Limburgan; Limburger; Limburgish
LIN	Lithuanian
LOL	Mongo
LOZ	Lozi
LTZ	Luxembourgish; Letzeburgesch
LUA	Luba-Lulua
LUB	Luba-Katanga
LUG	Ganda
LUI	Luiseno
LUN	Lunda
LUO	Luo (Kenya and Tanzania)
LUS	Lushai
MAC	Macedonian
MAD	Madurese
MAG	Magahi
MAH	Marshallese
MAI	Maithili
MAK	Makasar
MAL	Malayalam
MAN	Mandingo
MAO	Maori
MAP	Austronesian (Other)
MAR	Marathi
MAS	Masai
MAY	Malay
MDF	Moksha
MDR	Mandar
MEN	Mende
MGA	Irish, Middle (900-1200)
MIC	Mi'kmaq; Micmac
MIG	Malagasy
MIN	Minangkabau

Appendix C1: ISO 639-2 Language Codes http://www.loc.gov/standards/iso639-2/php/code_list.php Sorted by Language Code	
Language Code	**Description**
MIS	Uncoded Languages
MKD	Macedonian
MKH	Mon-Khmer (Other)
MLT	Maltese
MNC	Manchu
MNI	Manipuri
MNO	Manobo Languages
MOH	Mohawk
MOL	Moldavian
MON	Mongolian
MOS	Mossi
MRI	Maori
MSA	Malay
MUL	Multiple Languages
MUN	Munda Languages
MUS	Creek
MWL	Mirandese
MWR	Marwari
MYA	Burmese
MYA	Burmese
MYN	Mayan Languages
MYV	Erzya
NAH	Nahuatl Languages
NAI	North American Indian
NAP	Neapolitan
NAU	Nauru
NAV	Navajo; Navaho
NBL	Nddbele, South; South Ndebele
NDE	Ndebele, North; North Ndebele
NDO	Ndonga
NDS	Low German; Low Saxon; German, Low; Saxon, Low
NEP	Nepali

Appendix C1: ISO 639-2 Language Codes http://www.loc.gov/standards/iso639-2/php/code_list.php Sorted by Language Code	
Language Code	**Description**
NEW	Nepal Bhasa; Newari
NIA	Nias
NIC	Niger-Kordofanian (Other)
NIU	Niuean
NLD	Dutch, Flemish
NNO	Norwegian Nynorsk; Nynorsk, Norwegian
NOB	Bokmål, Norwegian; Norwegian Bokmål
NOG	Nogai
NON	Norse, Old
NOR	Norwegian
NQO	N'Ko
NSO	Northern Sotho; Pedi; Sepedi
NUB	Nubian Languages
NWC	Nepal Bhasa, Classical; Classical Newari
NYA	Nyanja; Chichewa; Chewa
NYM	Nyamwezi
NYN	Nyankole
NYO	Nyoro
NZI	Nzima
OCI	Occitan (post 1500); Provençal
OJI	Ojibwa
ORI	Oriya
ORM	Oromo
OSA	Osage
OSS	Ossetian; Ossetic
OTA	Turkish, Ottoman (1500-1928)
OTO	Otomian Languages
PAA	Papuan (Other)
PAG	Pangasinan
PAL	Pahlavi
PAM	Pampanga
PAN	Panjabi; Punjabi

Appendix C1: ISO 639-2 Language Codes http://www.loc.gov/standards/iso639-2/php/code_list.php Sorted by Language Code	
Language Code	**Description**
PAP	Papiamento
PAU	Palauan
PEO	Persian, Old (ca. 600-400 B.C.)
PER	Persian
PHI	Philippine (Other)
PHN	Phoenician
PLI	Pali
POL	Polish
PON	Pohnpeian
POR	Portuguese
PRA	Prakrit Languages
PRO	Provençal, Old (to 1500)
PUS	Pushto
QAA	Reserved for Local Use
QTZ	Reserved for Local Use
QUE	Quechua
RAJ	Rajasthani
RAP	Rapanui
RAR	Rarotongan; Cook Islands Maori
ROA	Romance (Other)
ROH	Romansh
ROM	Romany
RON	Romanian
RUM	Romanian
RUN	Rundi
RUP	Aromanian, Arumanian; Macedo-Romanian
RUS	Russian
SAD	Sandawe
SAG	Sango
SAH	Yakut
SAI	South American Indian (Other)
SAL	Salishan Languages

Appendix C1: ISO 639-2 Language Codes http://www.loc.gov/standards/iso639-2/php/code_list.php Sorted by Language Code	
Language Code	**Description**
SAM	Samaritan Aramaic
SAN	Sanskrit
SAS	Sasak
SAT	Santali
SCC	Serbian
SCN	Sicilian
SCO	Scots
SCR	Croatian
SEL	Selkup
SEM	Semitic (Other)
SGA	Irish, Old (to 900)
SGN	Sign Languages
SHN	Shan
SID	Sidamo
SIN	Sinhala; Sinhalese
SIO	Siouan Languages
SIT	Sino-Tibetan (Other)
SLA	Slavic (Other)
SLK	Slovak
SLO	Slovak
SLV	Slovenian
SMA	Southern Sami
SME	Northern Sami
SMI	Sami Languages (Other)
SMJ	Lule Sami
SMN	Inari Sami
SMO	Samoan
SMS	Skolt Sami
SNA	Shona
SND	Sindhi
SNK	Soninke
SOG	Sogdian

Appendix C1: ISO 639-2 Language Codes http://www.loc.gov/standards/iso639-2/php/code_list.php Sorted by Language Code	
Language Code	**Description**
SOM	Somali
SON	Songhai Languages
SOT	Sotho, Southern
SPA	Spanish, Castilian
SQI	Albanian
SQI	Albanian
SRD	Sardinian
SRN	Sranan Tongo
SRP	Serbian
SRR	Serer
SSA	Nilo-Saharan (Other)
SSW	Swati
SUK	Sukuma
SUN	Sundanese
SUS	Susu
SUX	Sumerian
SWA	Swahili
SWE	Swedish
SYC	Syriac, Classical
SYR	Syriac
TAH	Tahitian
TAI	Tai (Other)
TAM	Tamil
TAT	Tatar
TEL	Telugu
TEM	Timne
TER	Tereno
TET	Tetum
TGK	Tajik
TGL	Tagalog
THA	Thai
TIB	Tibetan

Appendix C1: ISO 639-2 Language Codes http://www.loc.gov/standards/iso639-2/php/code_list.php Sorted by Language Code	
Language Code	**Description**
TIB	Tibetan
TIG	Tigre
TIR	Tigrinya
TIV	Tiv
TKL	Tokelau
TLH	Tlhlngan-Hol; Klingon
TLI	Tlingit
TMH	Tamashek
TOG	Tonga (Nyasa)
TON	Tonga (Tonga Islands)
TPI	Tok Pisin
TSI	Tsimshian
TSN	Tswana
TSO	Tsonga
TUK	Turkmen
TUM	Tumbuka
TUP	Tupi Languages
TUR	Turkish
TUT	Altaic (Other)
TVL	Tuvalu
TWI	Twi
TYV	Tuvinian
UDM	Udmurt
UGA	Ugaritic
UIG	Uighur; Uyghur
UKR	Ukrainian
UMB	Umbundu
UND	Undetermined
URD	Urdu
UZB	Uzbek
VAI	Vai
VEN	Venda

Appendix C1: ISO 639-2 Language Codes http://www.loc.gov/standards/iso639-2/php/code_list.php Sorted by Language Code	
Language Code	**Description**
VIE	Vietnamese
VOL	Volapük
VOT	Votic
WAK	Wakashan Languages
WAL	Walamo
WAR	Waray
WAS	Washo
WEL	Welsh
WEN	Sorbian Languages
WLN	Walloon
WOL	Wolof
XAL	Kalmyk; Oirat
XHO	Xhosa
YAO	Yao
YAP	Yapese
YID	Yiddish
YOR	Yoruba
YPK	Yupik Languages
ZAP	Zapotec
ZEN	Zenaga
ZHA	Zhuang; Chuang
ZHO	Chinese
ZND	Zande languages
ZUL	Zulu
ZUN	Zuni
ZXX	No linguistic content
ZZA	Zaza; Dimili; Dimli; Kirdki; Kirmanjki; Zazaki

Appendix C2: ISO 639-2 Language Codes http://www.loc.gov/standards/iso639-2/php/code_list.php Sorted by Name of Language	
Language Code	**Description**
AAR	Afar
ABK	Abkhazian
ACE	Achinese
ACH	Acoli
ADA	Adangme
ADY	Adyghe; Adygei
AFH	Afrihili
AFR	Afrikaans
AFA	Afro-Asiatic (Other)
AIN	Ainu
AKA	Akan
AKK	Akkadian
ALB	Albanian
SQI	Albanian
SQI	Albanian
ALE	Aleut
ALG	Algonquian Languages
TUT	Altaic (Other)
AMH	Amharic
ANP	Angika
APA	Apache Languages
ARA	Arabic
ARG	Aragonese
ARC	Aramaic (700-300 BCE); Imperial Aramaic (700-300 BCE)
ARP	Arapaho
ARW	Arawak
ARM	Armenian
HYE	Armenian
RUP	Aromanian, Arumanian; Macedo-Romanian
ART	Artificial (Other)
ASM	Assamese
AST	Asturian; Bable

Appendix C2: ISO 639-2 Language Codes http://www.loc.gov/standards/iso639-2/php/code_list.php Sorted by Name of Language	
Language Code	**Description**
ATH	Athapascan Languages
DEN	Athapascan Slave
AUS	Australian Languages
MAP	Austronesian (Other)
AVA	Avaric
AVE	Avestan
AWA	Awadhi
AYM	Aymara
AZE	Azerbaijani
AST	Bable, Asturian
BAN	Balinese
BAT	Baltic (Other)
BAM	Bambara
BAI	Bamileke Languages
BAD	Banda Languages
BNT	Bantu (Other)
BAS	Basa
BAQ	Basque
EUS	Basque
BTK	Batak Languages
BEJ	Beja
BEL	Belarusian
BEM	Bemba
BEN	Bengali
BER	Berber (Other)
BHO	Bhojpuri
BIH	Bihari
BIK	Bihari
BYN	Bilin; Blin
BIN	Bini; Edo
BIS	Bislama
BYN	Blin; Bilin

Appendix C2: ISO 639-2 Language Codes http://www.loc.gov/standards/iso639-2/php/code_list.php Sorted by Name of Language	
Language Code	**Description**
NOB	Bokmål, Norwegian; Norwegian Bokmål
BOS	Bosnian
BRA	BRAJ
BRE	Breton
BUG	Buginese
BUL	Bulgarian
CHU	Bulgarian (Old); Church Slavic; Old Slavonic; Church Slavonic; Old Church Slavonic
BUA	Buriat
MYA	Burmese
MYA	Burmese
CAD	Caddo
CAT	Catalan; Valencian
CAU	Caucasian (Other)
CEB	Cebuano
CEL	Celtic (Other)
CAI	Central American Indian (Other)
CHG	Chagatai
CMC	Chamic Languages
CHA	Chamorro
CHE	Chechen
CHR	Cherokee
CHY	Cheyenne
CHB	Chibcha
NYA	Chichewa; Chewa; Nyanja
CHI	Chinese
ZHO	Chinese
ZHO	Chinese
CHN	Chinook Jargon
CHP	Chipewyan
CHO	Choctaw
ZHA	Chuang; Zhuang
CHU	Church Slavic; Old Slavonic; Church Slavonic; Old Bulgarian; Old Church

Appendix C2: ISO 639-2 Language Codes http://www.loc.gov/standards/iso639-2/php/code_list.php Sorted by Name of Language	
Language Code	**Description**
	Slavonic
CHK	Chuukese
CHV	Chuvash
RAR	Cook Islands Maori; Rarotongan
COP	Coptic
COR	Cornish
COS	Corsican
CRE	Cree
MUS	Creek
CRP	Creoles and Pidgins (Other)
CPE	Creoles and Pidgins, English Based (Other)
CPF	Creoles and Pidgins, French Based (Other)
CPP	Creoles and Pidgins, Portuguese Based (Other)
CRH	Crimean Tatar; Crimean Turkish
HRV	Croatian
SCR	Croatian
CUS	Cushitic (Other)
CES	Czech
CZE	Czech
DAK	Dakota
DAN	Danish
DAR	Dargwa
DAY	Dayak (Land) Languages
DEL	Delaware
ZZA	Dimili; Dimli; Kirdki; Kirmanjki; Zazaki; Zaza
DIN	Dinka
DIV	Divehi; Dhivehi; Maldivian
DOI	Dogri
DGR	Dogrib
DRA	Dravidian (Other)
DUA	Duala
NLD	Dutch, Flemish

Appendix C2: ISO 639-2 Language Codes http://www.loc.gov/standards/iso639-2/php/code_list.php Sorted by Name of Language	
Language Code	**Description**
DUM	Dutch, Middle (ca. 1050–1350)
DUT	Dutch; Flemish
NLD	Dutch; Flemish
DYU	Dyula
DZO	Dzongkha
BIN	Edo; Bini
EFI	Efik
EGY	Egyptian (Ancient)
EKA	Ekajuk
ELX	Elamite
ENG	English
ENM	English, Middle (1100-1500)
ANG	English, Old (ca. 450-1100)
MYV	Erzya
EPO	Esperanto
EST	Estonian
EWE	Ewe
EWO	Ewondo
FAN	Fang
FAT	Fanti
FAO	Faroese
FIJ	Fijian
FIL	Filipino; Pilipino
FIN	Finnish
FIU	Finno-Ugrian (Other)
DUT	Flemish; Dutch
NLD	Flemish; Dutch
FON	Fon
FRA	French
FRE	French
FRM	French, Middle (ca. 1400-1600)
FRO	French, Old (842-ca. 1400)

Appendix C2: ISO 639-2 Language Codes http://www.loc.gov/standards/iso639-2/php/code_list.php Sorted by Name of Language	
Language Code	**Description**
FRS	Frisian, Eastern
FRR	Frisian, Northern
FRY	Frisian, Western
FUR	Friulian
FUL	Fulah
GAA	Ga
GLA	Gaelic; Scottish Gaelic
CAR	Galibi Carib
GLG	Galician
LUG	Ganda
GAY	Gayo
GBA	Gbaya
GEZ	Geez
GEO	Georgian
KAT	Georgian
DEU	German
GER	German
GSW	German (Swiss); Alemannic
NDS	German, Low; Saxon, Low
GMH	German, Middle High (ca.1050-1500)
GOH	German, Old High (ca. 750-1050)
GEM	Germanic (Other)
KIK	Gikuyu; Kikuyu
GIL	Gilbertese
GON	Gondi
GOR	Gorontalo
GOT	Gothic
GRB	Grebo
GRC	Greek, Ancient (to 1453)
ELL	Greek, Modern (1453-)
GRE	Greek, Modern (1453-)
KAL	Greenlandic; Kalaallisut

Appendix C2: ISO 639-2 Language Codes http://www.loc.gov/standards/iso639-2/php/code_list.php Sorted by Name of Language	
Language Code	**Description**
GRN	Guarani
GUJ	Gujarati
GWI	Gwich'in
HAI	Haida
HAU	Hausa
HAW	Hawaiian
HEB	Hebrew
HER	Herero
HIL	Hiligaynon
HIM	Himigaynon
HIN	Hindi
HMO	Hiri Motu
HIT	Hittite
HMN	Hmong
HUN	Hungarian
HUP	Hupa
IBA	Iban
ICE	Icelandic
ISL	Icelandic
IDO	Ido
IBO	Igbo
IJO	Ijo Languages
ILO	Iloko
SMN	Inari Sami
NAI	Indian, North American
SAI	Indian, South American (Other)
INC	Indic (Other)
INE	Indo-European (Other)
IND	Indonesian
INH	Ingush
INA	Interlingua (International Auxiliary Language Association)
ILE	Interlingue

Appendix C2: ISO 639-2 Language Codes http://www.loc.gov/standards/iso639-2/php/code_list.php Sorted by Name of Language	
Language Code	**Description**
IKU	Inuktitut
IPK	Inupiaq
IRA	Iranian (Other)
GLE	Irish
MGA	Irish, Middle (900-1200)
SGA	Irish, Old (to 900)
IRO	Iroquoian Languages
ITA	Italian
JPN	Japanese
JAV	Javanese
KAC	Jingpho; Kachin
JRB	Judeo-Arabic
JPR	Judeo-Persian
KBD	Kabardian
KAB	Kabyle
KAC	Kachin; Jingpho
KAL	Kalaallisut; Greenlandic
XAL	Kalmyk; Oirat
KAM	Kamba
KAN	Kannada
KAU	Kanuri
KRC	Karachay-Balkar
KAA	Kara-Kalpak
KRL	Karelian
KAR	Karen Languages
KAS	Kashmiri
CSB	Kashubian
KAW	Kawi
KAZ	Kazakh
KHA	Khasi
KHM	Khmer (Central)
KHI	Khoisan (Other)

Appendix C2: ISO 639-2 Language Codes http://www.loc.gov/standards/iso639-2/php/code_list.php Sorted by Name of Language	
Language Code	**Description**
KHO	Khotanese
KIK	Kikuyu; Gikuyu
KMB	Kimbundu
KIN	Kinyarwanda
ZZA	Kirdki; Kirmanjki; Zazaki; Zaza; Dimili; Dimli;
KIR	Kirghiz; Kyrgyz
TLH	Klingon; tlhlngan-Hol
KOM	Komi
KON	Kongo
KOK	Konkani
KOR	Korean
KOS	Kosraean
KPE	Kpelle
KRO	Kru Languages
KUA	Kuanyama; Kwanyama
KUM	Kumyk
KUR	Kurdish
KRU	Kurukh
KUT	Kutenai
LAD	Ladino
LAH	Lahnda
LAM	Lamba
LAO	Lao
LAT	Latin
LAV	Latvian
LEZ	Lezghian
LIM	Limburgan; Limburger; Limburgish
LIN	Lithuanian
JBO	Lojban
NDS	Low German; Low Saxon; German, Low; Saxon, Low
DSB	Lower Sorbian
LOZ	Lozi

Appendix C2: ISO 639-2 Language Codes http://www.loc.gov/standards/iso639-2/php/code_list.php Sorted by Name of Language	
Language Code	**Description**
LUB	Luba-Katanga
LUA	Luba-Lulua
LUI	Luiseno
SMJ	Lule Sami
LUN	Lunda
LUO	Luo (Kenya and Tanzania)
LUS	Lushai
LTZ	Luxembourgish; Letzeburgesch
MAC	Macedonian
MKD	Macedonian
RUP	Macedo-Romanian; Aromanian, Arumanian
MAD	Madurese
MAG	Magahi
MAI	Maithili
MAK	Makasar
MIG	Malagasy
MAY	Malay
MSA	Malay
MAL	Malayalam
DIV	Maldivian; Divehi; Dhivehi
MLT	Maltese
MNC	Manchu
MDR	Mandar
MAN	Mandingo
MNI	Manipuri
MNO	Manobo Languages
GLV	Manx
MAO	Maori
MRI	Maori
ARN	Mapudungun; Mapuche
MAR	Marathi
CHM	Mari

Appendix C2: ISO 639-2 Language Codes http://www.loc.gov/standards/iso639-2/php/code_list.php Sorted by Name of Language	
Language Code	**Description**
MAH	Marshallese
MWR	Marwari
MAS	Masai
MYN	Mayan Languages
MEN	Mende
MIC	Mi'kmaq; Micmac
MIN	Minangkabau
MWL	Mirandese
MOH	Mohawk
MDF	Moksha
MOL	Moldavian
LOL	Mongo
MON	Mongolian
MKH	Mon-Khmer (Other)
MOS	Mossi
MUL	Multiple Languages
MUN	Munda Languages
NQO	N'Ko
NAH	Nahuatl Languages
NAU	Nauru
NAV	Navajo; Navaho
NBL	Nddbele, South; South Ndebele
NDE	Ndebele, North; North Ndebele
NDO	Ndonga
NAP	Neapolitan
NWC	Nepal Bhasa, Classical; Classical Newari
NEW	Nepal Bhasa; Newari
NEP	Nepali
NWC	Newari, Classical; Old Newari; Classical Nepal Bhasa
NIA	Nias
NIC	Niger-Kordofanian (Other)
SSA	Nilo-Saharan (Other)

Appendix C2: ISO 639-2 Language Codes http://www.loc.gov/standards/iso639-2/php/code_list.php Sorted by Name of Language	
Language Code	**Description**
NIU	Niuean
ZXX	No linguistic content
NOG	Nogai
NON	Norse, Old
NAI	North American Indian
SME	Northern Sami
NSO	Northern Sotho; Pedi; Sepedi
NOR	Norwegian
NNO	Norwegian Nynorsk; Nynorsk, Norwegian
NUB	Nubian Languages
NYM	Nyamwezi
NYA	Nyanja; Chichewa; Chewa
NYN	Nyankole
NYO	Nyoro
NZI	Nzima
OCI	Occitan (post 1500); Provençal
XAL	Oirat; Kalmyk
OJI	Ojibwa
ORI	Oriya
ORM	Oromo
OSA	Osage
OSS	Ossetian; Ossetic
OTO	Otomian Languages
PAL	Pahlavi
PAU	Palauan
PLI	Pali
PAM	Pampanga
PAG	Pangasinan
PAN	Panjabi; Punjabi
PAP	Papiamento
PAA	Papuan (Other)
NSO	Pedi; Sepedi; Northern Sotho

Appendix C2: ISO 639-2 Language Codes http://www.loc.gov/standards/iso639-2/php/code_list.php Sorted by Name of Language	
Language Code	**Description**
FAS	Persian
PER	Persian
PER	Persian
PEO	Persian, Old (ca. 600-400 B.C.)
PHI	Philippine (Other)
PHN	Phoenician
FIL	Pilipino; Filipino
PON	Pohnpeian
POL	Polish
POR	Portuguese
PRA	Prakrit Languages
PRO	Provençal, Old (to 1500)
PAN	Punjabi; Panjabi
PUS	Pushto
QUE	Quechua
RAJ	Rajasthani
RAP	Rapanui
RAR	Rarotongan; Cook Islands Maori
QAA	Reserved for Local Use
QTZ	Reserved for Local Use
ROA	Romance (Other)
RON	Romanian
RUM	Romanian
ROH	Romansh
ROM	Romany
RUN	Rundi
RUS	Russian
SSA	Saharan, Nilo (Other)
SAL	Salishan Languages
SAM	Samaritan Aramaic
SMI	Sami Languages (Other)
SMN	Sami, Inari

Appendix C2: ISO 639-2 Language Codes http://www.loc.gov/standards/iso639-2/php/code_list.php Sorted by Name of Language	
Language Code	**Description**
SMJ	Sami, Lule
SME	Sami, Northern
SMS	Sami, Skolt
SMA	Sami, Southern
SMO	Samoan
SAD	Sandawe
SAG	Sango
SAN	Sanskrit
SAT	Santali
SRD	Sardinian
SAS	Sasak
NDS	Saxon, Low; German, Low
SCO	Scots
GLA	Scottish Gaelic
SEL	Selkup
SEM	Semitic (Other)
SCC	Serbian
SRP	Serbian
SRR	Serer
SHN	Shan
SNA	Shona
III	Sichuan Yi
SCN	Sicilian
SID	Sidamo
SGN	Sign Languages
BLA	Siksika
SND	Sindhi
SIN	Sinhala; Sinhalese
SIT	Sino-Tibetan (Other)
SIO	Siouan Languages
SMS	Skolt Sami
DEN	Slave (Athapascan)

Appendix C2: ISO 639-2 Language Codes http://www.loc.gov/standards/iso639-2/php/code_list.php Sorted by Name of Language	
Language Code	**Description**
CHU	Slavic (Church); Old Slavonic; Church Slavonic; Old Bulgarian; Old Church Slavonic
SLA	Slavic (Other)
SLK	Slovak
SLO	Slovak
SLV	Slovenian
SOG	Sogdian
SOM	Somali
SON	Songhai Languages
SNK	Soninke
HSB	Sorbian (Upper)
WEN	Sorbian Languages
DSB	Sorbian, Lower
NSO	Sotho, Northern; Pedi; Sepedi
SOT	Sotho, Southern
SAI	South American Indian (Other)
ALT	Southern Altai
SMA	Southern Sami
SPA	Spanish, Castilian
SRN	Sranan Tongo
SUK	Sukuma
SUX	Sumerian
SUN	Sundanese
SUS	Susu
SWA	Swahili
SSW	Swati
SWE	Swedish
GSW	Swiss German, Alemannic
SYR	Syriac
SYC	Syriac, Classical
TGL	Tagalog
TAH	Tahitian
TAI	Tai (Other)

Appendix C2: ISO 639-2 Language Codes http://www.loc.gov/standards/iso639-2/php/code_list.php Sorted by Name of Language	
Language Code	**Description**
HAT	Taitian; Haitian Creole
TGK	Tajik
TMH	Tamashek
TAM	Tamil
TAT	Tatar
CRH	Tatar (Crimean); Crimean Turkish
TEL	Telugu
TER	Tereno
TET	Tetum
THA	Thai
BOD	Tibetan
TIB	Tibetan
TIB	Tibetan
TIG	Tigre
TIR	Tigrinya
TEM	Timne
TIV	Tiv
TLH	Tlhlngan-Hol; Klingon
TLI	Tlingit
TPI	Tok Pisin
TKL	Tokelau
TOG	Tonga (Nyasa)
TON	Tonga (Tonga Islands)
SRN	Tongo, Sranan
TSI	Tsimshian
TSO	Tsonga
TSN	Tswana
TUM	Tumbuka
TUP	Tupi Languages
TUR	Turkish
CRH	Turkish (Crimean); Crimean Tatar
OTA	Turkish, Ottoman (1500-1928)

Appendix C2: ISO 639-2 Language Codes http://www.loc.gov/standards/iso639-2/php/code_list.php Sorted by Name of Language	
Language Code	**Description**
TUK	Turkmen
TVL	Tuvalu
TYV	Tuvinian
TWI	Twi
UDM	Udmurt
UGA	Ugaritic
UIG	Uighur; Uyghur
UKR	Ukrainian
UMB	Umbundu
MIS	Uncoded Languages
UND	Undetermined
URD	Urdu
UZB	Uzbek
VAI	Vai
CAT	Valencian; Catalan
VEN	Venda
VIE	Vietnamese
VOL	Volapük
VOT	Votic
WAK	Wakashan Languages
WAL	Walamo
WLN	Walloon
WAR	Waray
WAS	Washo
CYM	Welsh
WEL	Welsh
WEL	Welsh
WOL	Wolof
XHO	Xhosa
SAH	Yakut
YAO	Yao
YAP	Yapese

Appendix C2: ISO 639-2 Language Codes http://www.loc.gov/standards/iso639-2/php/code_list.php Sorted by Name of Language	
Language Code	**Description**
YID	Yiddish
YOR	Yoruba
YPK	Yupik Languages
ZND	Zande languages
ZAP	Zapotec
ZZA	Zaza; Dimili; Dimli; Kirdki; Kirmanjki; Zazaki
ZEN	Zenaga
ZHA	Zhuang; Chuang
ZUL	Zulu
ZUN	Zuni

Appendix D – TestCode and TestName (Older Version used in EDI – Created in early 1990's)

TestCode	TestName
1	California Achievement Tests, 1977
2	California Achievement Tests, 1985
3	California Achievement Tests, 1986
4	Comprehensive Assessment Program Achievement Series, 1980
5	Comprehensive Tests of Basic Skills, 1981
6	Comprehensive Tests of Basic Skills, 1988
7	Iowa Tests of Basic Skills, 1978
8	Iowa Tests of Basic Skills, 1985
9	Tests of Achievement and Proficiency, 1978
10	Tests of Achievement and Proficiency, 1985
11	Metropolitan Achievement Tests, 1978
12	Metropolitan Achievement Tests, 1985
13	Metropolitan Language Instructional Tests, 1979
14	Metropolitan Reading Instructional Tests, 1979
15	National Tests of Basic Skills, 1985
16	National Tests of Basic Skills, 1986
17	National Achievement Tests Comprehensive Assessment Program, 1989
18	Science Research Associates Achievement Tests, 1978
19	Science Research Associates Survey of Basic Skills, 1985
20	Stanford Diagnostic Reading Test, 1984
21	Stanford Achievement Tests, 1982
22	Stanford Achievement Tests, 1987
23	Stanford Achievement Tests, 1988
24	Stanford Test of Academic Skills, 1982
25	Stanford Test of Academic Skills, 1987
26	Stanford Test of Academic Skills, 1988
27	Sequential Tests of Educational Progress, 1979
28	The 3 R's Test, 1982
29	California Achievement Tests
30	Comprehensive Assessment Program Achievement Series
31	Comprehensive Tests of Basic Skills
32	Iowa Tests of Basic Skills
33	Tests of Achievement and Proficiency
34	Metropolitan Achievement Tests
35	Metropolitan Language Instructional Tests
36	Metropolitan Reading Instructional Tests
37	National Tests of Basic Skills
38	National Achievement Tests Comprehensive Assessment Program
39	Science Research Associates Achievement Tests
40	Science Research Associates Survey of Basic Skills
41	Stanford Diagnostic Reading Test
42	Stanford Achievement Tests
43	Stanford Test of Academic Skills
44	Sequential Tests of Educational Progress
45	The 3 R's Test
46	Iowa Test of Educational Development (Grades 9-12)
555	Local/District Adopted Test
801	American College Testing Program (ACT)
802	Preliminary American College Testing (PACT)
803	College Board's Scholastic Aptitude Test (SAT I)
804	Preliminary Scholastic Aptitude Test/ National Merit Scholarship Qualifying Test (PSAT/NMSQT)
805	College Board's Achievement Tests (SAT II)
806	Test of Adult Basic Education (TABE)
807	International Baccalaureate (IB)
808	General Education Development (GED)
809	Test of English as a Foreign Language (TOEFL)
811	Graduate Management Admissions Test (GMAT)
812	Law School Admissions Test (LSAT)
813	Miller Analogies Test
814	Medical Colleges Aptitude Test (MCAT)
815	Dental Admissions Test
816	Optometry Admissions Test
817	Allied Health Professions Admission Test (AHPAT)
818	College Level Examination Program (CLEP) General Examinations
819	College Level Examination Program (CLEP) Subject Examinations
821	Graduate Record Examination (GRE) General Test
822	Graduate Record Examination (GRE) Subject Tests
826	Pre-Professional Skills Test (PPST)
828	Test of Spoken English (TSE)
829	Test of Written English (TWE)
830	Veterinary College Admission Test (VCAT)
831	College Board's Advanced Placement Program (AP)
9AK	Alaska State Adopted Test or Requirement
9AL	Alabama State Adopted Test or Requirement
9AR	Arkansas State Adopted Test or Requirement
9AZ	Arizona State Adopted Test or Requirement
9CA	California State Adopted Test or Requirement
9CO	Colorado State Adopted Test or Requirement
9CT	Connecticut State Adopted Test or Requirement
9DC	District of Columbia State Adopted Test or Requirement
9DE	Delaware State Adopted Test or Requirement
9FL	Florida State Adopted Test or Requirement
9GA	Georgia State Adopted Test or Requirement
9HI	Hawaii State Adopted Test or Requirement
9IA	Iowa State Adopted Test or Requirement
9ID	Idaho State Adopted Test or Requirement
9IL	Illinois State Adopted Test or Requirement
9IN	Indiana State Adopted Test or Requirement
9KS	Kansas State Adopted Test or Requirement
9KY	Kentucky State Adopted Test or Requirement
9LA	Louisiana State Adopted Test or Requirement
9MA	Massachusetts State Adopted Test or Requirement
9MD	Maryland State Adopted Test or Requirement
9ME	Maine State Adopted Test or Requirement
9MI	Michigan State Adopted Test or Requirement
9MN	Minnesota State Adopted Test or Requirement
9MO	Missouri State Adopted Test or Requirement
9MS	Mississippi State Adopted Test or Requirement
9MT	Montana State Adopted Test or Requirement
9NC	North Carolina State Adopted Test or Requirement
9ND	North Dakota State Adopted Test or Requirement
9NE	Nebraska State Adopted Test or Requirement
9NH	New Hampshire State Adopted Test or Requirement
9NJ	New Jersey State Adopted Test or Requirement
9NM	New Mexico State Adopted Test or Requirement
9NV	Nevada State Adopted Test or Requirement
9NY	New York State Adopted Test or Requirement
9OH	Ohio State Adopted Test or Requirement
9OK	Oklahoma State Adopted Test or Requirement
9OR	Oregon State Adopted Test or Requirement
9PA	Pennsylvania State Adopted Test or Requirement
9RI	Rhode Island State Adopted Test or Requirement
9SC	South Carolina State Adopted Test or Requirement
9SD	South Dakota State Adopted Test or Requirement
9TN	Tennessee State Adopted Test or Requirement
9TX	Texas State Adopted Test or Requirement
9UT	Utah State Adopted Test or Requirement
9VA	Virginia State Adopted Test or Requirement
9VT	Vermont State Adopted Test or Requirement
9WA	Washington State Adopted Test or Requirement
9WI	Wisconsin State Adopted Test or Requirement

TestCode	TestName
9WV	West Virginia State Adopted Test or Requirement
9WY	Wyoming State Adopted Test or Requirement
999	Other Tests Not Listed or Provided by Sender

Appendix E – EducationTestCode and EducationTestName

These are the newer codes created for use in newer PESC XML Schemas in 2008

Appendix E – EducationTestCode and EducationTestName	
Test Code	**Test Name**
ACT	The ACT
ACTExplore	ACT EXPLORE
ACTInterestInventory	ACT Interest Inventory
ACTPlan	ACT PLAN
ACTWorkKeys	ACT WorkKeys
APArtDrawing	College Board Adv Placement in Art - Drawing
APArtGeneral	College Board Adv Placement in Art - General
APBiology	College Board Adv Placement in Biology
APCalculusAB	College Board Adv Placement in Calculus AB
APCalculusBC	College Board Adv Placement in Calculus BC
APChemistry	College Board Adv Placement in Chemistry
APComputerScienceA	College Board Adv Placement in Computer Science A
APComputerScienceB	College Board Adv Placement in Computer Science B
APEconomicsMacro	College Board Adv Placement in Economics Macro
APEconomicsMicro	College Board Adv Placement in Economics Micro
APEnglishLanguageComposition	College Board Adv Placement in English Language Composition
APFrenchLanguage	College Board Adv Placement in French Language
APFrenchLiterature	College Board Adv Placement in French Literature
APGermanLanguage	College Board Adv Placement in German Language
APGovernmentPoliticsComparative	College Board Adv Placement in Government & Politics - Comparative
APGovernmentPoliticsUS	College Board Adv Placement in Government & Politics - US
APHistoryArt	College Board Adv Placement in Art History
APHistoryEurope	College Board Adv Placement in European History
APHistoryUS	College Board Adv Placement in US History
APLatinCatHor	College Board Adv Placement in Latin Cat Hor
APLatinVergil	College Board Adv Placement in Latin - Vergil
APMusicListeningLiterature	College Board Adv Placement in Music Listening & Literature
APMusicTheory	College Board Adv Placement in Music Theory

Appendix E – EducationTestCode and EducationTestName

Test Code	Test Name
APPhysics	College Board Adv Placement in Physics
APPhysicsEngineeringMechanics	College Board Adv Placement in Physics C - E & M
APPhysicsMechanics	College Board Adv Placement in Physics C - Mech
APPsychology	College Board Adv Placement in Psychology
APSpanishLanguage	College Board Adv Placement in Spanish Language
APSpanishLiterature	College Board Adv Placement in Spanish Literature
CaliforniaHighSchoolExitExam	California High School Exit Exam
CLEPAccountingFinancial	College Level Examination Program - Finacial Accounting
CLEPAlgebraCollege	College Level Examination Program - College Algebra
CLEPBiology	College Level Examination Program - Biology
CLEPBusinessLawIntroduction	College Level Examination Program - Introduction to Business Law
CLEPCalculus	College Level Examination Program - Calculus
CLEPChemistry	College Level Examination Program - Chemistry
CLEPCompositionCollegeFreshman	College Level Examination Program - Freshman College Composition
CLEPCompsitionEnglish	College Level Examination Program - EnglishComposition
CLEPEconomicsMacro	College Level Examination Program - Principles of Macroeconomics
CLEPEconomicsMicro	College Level Examination Program - Principles of Microeconomics
CLEPEnglishComposition	College Level Examination Program - English Composition
CLEPFrenchLanguage	College Level Examination Program - French Language (Levels 1 and 2)
CLEPGermanLanguage	College Level Examination Program - German Lanaguage (Levels 1 and 2
CLEPGovernmentAmerican	College Level Examination Program - American Government
CLEPHistoryUSFrom1865	College Level Examination Program - U.S. History II:1865 to Present
CLEPHistoryUSTo1877	College Level Examination Program - U.S. History I: Early Colonization to 1877
CLEPHumanGrowthDevelopment	College Level Examination Program - Human Growth and Development
CLEPHumanities	College Level Examination Program - Humanities
CLEPInformationSystems	College Level Examination Program - Information Systems and Computer Applications

Appendix E – EducationTestCode and EducationTestName

Test Code	Test Name
CLEPLanguageSpanish	College Level Examination Program - Spanish Language (Levels 1 and 2)
CLEPLiteratureAmerican	College Level Examination Program - American Literature
CLEPLiteratureAnalysisAndInterpreting	College Level Examination Program - Analyzing and Interpreting Literature
CLEPLiteratureEnglish	College Level Examination Program - English Literature
CLEPManagement	College Level Examination Program - Principles of Management
CLEPMarketing	College Level Examination Program - Principles of Marketing
CLEPMath	College Level Examination Program - Mathematics
CLEPMathCollege	College Level Examination Program - College Mathematics
CLEPPreCalculus	College Level Examination Program - Precalculus
CLEPPsychologyEducational	College Level Examination Program - Educational Psychology
CLEPPsychologyIntroductory	College Level Examination Program - Introductory Psychology
CLEPSciencesNatural	College Level Examination Program - Natural Science
CLEPSocialSciencesAndHistory	College Level Examination Program - Social Sciences and History
CLEPSociologyIntroductory	College Level Examination Program - Introductory Sociology
CLEPWesternCivilizationFrom1648	College Level Examination Program - Western Civilization II: 1648 to Present
CLEPWesternCivilizationTo1648	College Level Examination Program - Western Civilization I: Ancient Near East to 1648
GED	General Education Development
GMAT	GMAT (Graduate Management Admission Test)
GRE	Graduate Record Examination General Test (ETS)
GREBiochemistryCellMolecular	Graduate Record Examination General Test (ETS)
GREBiology	Graduate Record Examination - Biology
GREChemistry	Graduate Record Examination - Chemistry
GREComputerScience	Graduate Record Examination - Computer Science
GRELiteratureEnglish	Graduate Record Examination - Literature in English
GREMathematics	Graduate Record Examination - Mathematics
GREPhysics	Graduate Record Examination - Physics
GREPsychology	Graduate Record Examination - Psychology

Appendix E – EducationTestCode and EducationTestName

Test Code	Test Name
IELTS	International English Language Testing System (Cambridge)
InternationalBaccalaureate	International Baccalaureate
LSAT	Law School Admission Test
MCAT	Medical Colleges Admissions Test
OtherStateTest	Other State Test
OtherTest	Other Test
SAT	SAT Reasoning Test
SATBiology	SAT Subject Test - Biology E/M
SATChemistry	SAT Subject Test - Chemistry
SATChineseListening	SAT Subject Test - Chinese with Listening
SATFrenchListening	SAT Subject Test - French Listening
SATGerman	SAT Subject Test - German
SATGermanListening	SAT Subject Test - German Listening
SATHebrew	SAT Subject Test - Hebrew
SATHebrewModern	SAT Subject Test - Modern Hebrew
SATHistoryWorld	SAT Subject Test - World History
SATItalian	SAT Subject Test - Italian
SATJapaneseWithListening	SAT Subject Test - Japanese with Listening
SATKoreanListening	SAT Subject Test - Korean with Listening
SATLatin	SAT Subject Test - Latin
SATLiterature	SAT Subject Test - Literature
SATMath1	SAT Subject Test - Mathematics Level I
SATMath2	SAT Subject Test - Mathematics Level II
SATPhysics	SAT Subject Test - Physics
SATSpanish	SAT Subject Test - Spanish
SATSpanishListening	SAT Subject Test - Spanish Listening
SATUSHistory	SAT Subject Test - American History
TABE	Test of Adult Basic Education
TOEFL	Test of English as a Foreign Language

Appendix F – SubtestCode and SubtestName (Older codes created for EDI Transaction Sets in early 1990's)

CALIFORNIA ACHIEVEMENT TESTS (Test codes 1, 2, 3, and 29)

00001	Vocabulary
00002	Reading Comprehension
00003	Reading Total
00004	Spelling
00005	Language Mechanics
00006	Language Expression
00007	Language Total
00008	Mathematics Computation
00009	Mathematics Concepts and Applications
00010	Mathematics Total
00011	Total Battery
00012	Study Skills
00013	Science
00014	Social Studies
00100	Complete Battery
00101	Basic Battery

COMPREHENSIVE TESTS OF BASIC SKILLS (Test codes 5, 6 and 31)

00001	Visual Recognition
00002	Sound Recognition
00003	Oral Comprehension
00004	Word Attack
00005	Vocabulary
00006	Total Reading Oral
00007	Reading Comprehension
00008	Spelling
00009	Language Mechanics
00010	Language Expression
00011	Total Language
00012	Mathematics Computation
00013	Mathematics Concepts and Applications
00014	Reference Skills
00015	Science
00016	Social Studies
00100	Complete Battery
00101	Basic Battery

IOWA TESTS OF BASIC SKILLS (Test codes 7, 8 and 32)

00001	Listening
00002	Word Analysis
00003	Vocabulary
00004	Reading Comprehension
00005	Spelling
00006	Capitalization
00007	Punctuation
00008	Usage and Expression
00009	Language Total
00010	Visual Materials
00011	Reference Materials
00012	Work-Study Skills
00013	Mathematics Concepts
00014	Mathematics Problems
00015	Mathematics Computation
00016	Science
00017	Materials Total
00018	Mathematics Total
00019	Social Studies
00100	Complete Battery
00101	Basic Battery

Appendix F – SubtestCode and SubtestName (Continued)

TESTS OF ACHIEVEMENT AND PROFICIENCY (Test codes 9, 10 and 33)

00001	Reading Comprehension
00002	Mathematics
00003	Written Expression
00004	Using Sources of Information
00005	Social Studies
00006	Science
00007	Applied Proficiency Skills
00008	Total Battery
00100	Complete Battery
00101	Basic Battery

METROPOLITAN ACHIEVEMENT TESTS (Test codes 11, 12 and 34)

00001	Vocabulary
00002	Word Recognition Skills
00003	Reading Comprehension
00004	Total Reading
00005	Mathematics: Concepts
00006	Mathematics: Problem Solving
00007	Mathematics: Computation
00008	Total Mathematics
00009	Spelling
00010	Language
00011	Total Language
00012	Science
00013	Social Studies
00014	Research Skills
00100	Complete Battery
00101	Basic Battery

NATIONAL TESTS OF BASIC SKILLS (Test codes 15, 16 and 37)

00001	Listening
00002	Word Analysis
00003	Vocabulary
00004	Reading Comprehension
00005	Spelling
00006	Capitalization
00007	Punctuation
00008	Usage and Expression
00009	Language Total
00010	Visual Materials
00011	Reference Materials
00012	Work-Study Skills
00013	Mathematics Concepts
00014	Mathematics Problems
00015	Mathematics Computation
00016	Science
00017	Social Studies
00100	Basic Battery
00101	Complete Battery

Appendix F – SubtestCode and SubtestName (Continued)

SCIENCE RESEARCH ASSOCIATES SURVEY OF BASIC SKILLS (Test codes 19 and 40)

00001	Reading Total
00002	Auditory Discrimination
00003	Letters and Sounds
00004	Decoding
00005	Listening Comprehension
00006	Vocabulary
00007	Reading Comprehension
00008	Language Arts
00009	Mechanics
00010	Usage
00011	Spelling
00012	Mathematics: Concepts/Problem Solving
00013	Mathematics: Computation
00014	Reference Materials
00015	Educational Ability Series
00016	Reading Comprehension
00017	Social Studies
00018	Science
00019	Survey of Applied Skills
00100	Complete Battery
00101	Basic Battery

STANFORD ACHIEVEMENT TESTS (Test codes 21, 22, 23 and 42)

00001	Listening
00002	Word Analysis
00003	Vocabulary
00004	Reading Comprehension
00005	Spelling
00006	Capitalization
00007	Punctuation
00008	Usage and Expression
00009	Language Total
00010	Visual Materials
00011	Reference Materials
00012	Work-Study Skills
00013	Mathematics Concepts
00014	Mathematics Problems
00015	Mathematics Computation
00016	Basic Battery
00017	Complete Battery
00018	Social Studies
00019	Science
00100	Complete Battery
00101	Basic Battery

STANFORD TEST OF ACADEMIC SKILLS (Test codes 24, 25, 26 and 43)

00001	Word Reading
00002	Reading Comprehension
00003	Auditory Discrimination
00004	Phonetic Analysis
00005	Structural Analysis
00006	Auditory Vocabulary
00007	Vocabulary
00008	Word Parts
00009	Reading Rate
00010	Scanning and Skimming
00011	Fast Reading
00012	Number System and Numeration
00013	Computation
00014	Applications
00015	Mathematics Total
00100	Complete Battery
00101	Basic Battery

Appendix F – SubtestCode and SubtestName (Continued)

THE 3 R'S TEST (Test codes 28 and 45)

00001	Listening
00002	Word Analysis
00003	Vocabulary
00004	Reading Comprehension
00005	Spelling
00006	Capitalization
00007	Punctuation
00008	Usage and Expression
00009	Language Total
00010	Visual Materials
00011	Reference Materials
00012	Work-Study Skills
00013	Mathematics Concepts
00014	Mathematics Problems
00015	Mathematics Computation
00016	Social Studies
00017	Science
00100	Complete Battery
00101	Basic Battery

IOWA TEST OF EDUCATIONAL DEVELOPMENT, GRADES 9-12 (Test code 46)

00001	Vocabulary
00002	Content Area Reading
00003	Reading Total
00004	Expression – Advanced
00005	Expression Total
00006	Quantitative Thinking
00007	Quantitative Thinking
00008	Core Total
00009	Literary Materials
00010	Social Studies
00011	Science
00012	Sources of Informatio
00013	Composite

AMERICAN COLLEGE TESTING PROGRAM (ACT) (Test code 801)

00001	English
00002	English: Usage/Mechanics
00003	English: Rhetorical Skills
00004	Mathematics
00005	Mathematics: Preliminary and Elementary Algebra
00006	Mathematics: Intermediate Algebra and Geometry
00007	Mathematics: Plane Geometry and Trigonometry
00008	Reading
00009	Reading: Social Studies and Science
00010	Reading: Arts and Literature
00011	Science Reasoning
00012	Composite

PRELIMINARY AMERICAN COLLEGE TESTING (Test code 802)

00001	English
00002	English: Usage and Mechanics
00003	English: Rhetorical Skills
00004	Mathematics
00005	Mathematics: Preliminary Algebra
00006	Mathematics: Geometry
00007	Reading
00008	Reading: Social Studies and Scie
00009	Reading: Arts and Literature
00010	Science Reasoning
00011	Composite

Appendix F – SubtestCode and SubtestName (Continued)

THE COLLEGE BOARD'S SCHOLASTIC APTITUDE TEST (SAT I) (Test code 803)
00001 Verbal
00002 Reading Comprehension
00003 Vocabulary
00004 Mathematical
00005 Total
00006 Test of Standard Written English (TSWE)

PRELIMINARY SCHOLASTIC APTITUDE TEST/NATIONAL MERIT SCHOLARSHIP QUALIFYING TEST (PSAT/NMSQT) (Test code 804)
00001 Verbal
00002 Mathematical
00003 Total

COLLEGE BOARD'S ACHIEVEMENT TESTS (SAT II) (Test code 805)
00001 English Composition
00002 Literature
00003 American History
00004 European History
00005 Mathematics I
00006 Mathematics II
00007 Biology
00008 Chemistry
00009 Physics
00010 French
00011 German
00012 Hebrew
00013 Latin
00014 Spanish
00015 World History
00016 French Listening
00017 Japanese with Listening
00018 German Listening
00019 Spanish Listening
00020 Chinese with Listening
00021 English Composition with Essay
00022 Italian
00023 Mathematics Level IC
00024 Mathematics Level IIC
00025 Modern Hebrew
00026 Writing

TEST OF ADULT BASIC EDUCATION (TABE) (Test code 806)
00001 Language Arts
00002 Mechanics
00003 Expression
00004 Reading
00005 Vocabulary
00006 Comprehension
00007 Mathematics
00008 Computation
00009 Concepts/Applications
00010 Spelling

INTERNATIONAL BACCALAUREATE (IB) (Test code 807)
00001 Biology
00002 Chemistry
00003 English A
00004 English B
00005 Foreign Language A
00006 Foreign Language B
00007 History (American)
00008 History (European)
00009 Mathematics
00010 Physics

Appendix F – SubtestCode and SubtestName (Continued)

GENERAL EDUCATION DEVELOPMENT (GED) (Test code 808)
00001 Mathematics
00002 Interpreting Literature and the Arts
00003 Science
00004 Social Studies
00005 Writing Skills

TEST OF ENGLISH AS A FOREIGN LANGUAGE (TOEFL) (Test code 809)
00001 Listening Comprehension
00002 Structure and Written Expression
00003 Vocabulary
00004 Total

GRADUATE MANAGEMENT ADMISSIONS TEST (GMAT) (Test code 811)
00001 Verbal
00002 Quantitative

LAW SCHOOL ADMISSIONS TEST (LSAT) (Test code 812)
00001 Reading Comprehension
00002 Analytical Reasoning
00003 Logical Reasoning
00004 Variable

MEDICAL COLLEGES ADMISSIONS TEST (MCAT) (Test code 814)
00001 Biology
00002 Chemistry
00003 Physics
00004 Science
00005 Reading
00006 Quantitative

DENTAL ADMISSIONS TEST (Test code 815)
00001 Quantitative Reasoning
00002 Reading
00003 Biology
00004 General Chemistry
00005 Organic Chemistry
00006 Perceptual Ability
00007 Survey of Natural Science
00008 Academic Average

OPTOMETRY ADMISSIONS TEST (Test code 816)
00001 Quantitative Reasoning
00002 Reading
00003 Biology
00004 General Chemistry
00005 Organic Chemistry
00006 General Physics
00007 Survey of Natural Science
00008 Academic Average

ALLIED HEALTH PROFESSIONS ADMISSION TEST (AHPAT) (Test code 817)
00001 Verbal Ability
00002 Quantitative Ability
00003 Biology
00004 Chemistry
00005 Reading Comprehension

COLLEGE LEVEL EXAMINATION PROGRAM (CLEP) GENERAL EXAMS (Test code 818)
00001 English Composition
00002 Humanities
00003 Mathematics
00004 Natural Sciences
00005 Social Sciences and History

Appendix F – SubtestCode and SubtestName (Continued)

COLLEGE LEVEL EXAMINATION PROGRAM (CLEP) SUBJECT EXAMS (Test code 819)

00001	American Government
00002	American History I: Early Colonization to 1877
00003	American History II: 1865 to Present
00004	General Psychology
00005	Human Growth and Development
00006	Introduction to Educational Psychology
00007	Introductory Macro Economics
00008	Introductory Micro Economics
00009	Introductory Sociology
00010	Western Civilization I: Ancient Near East to 1648
00011	Western Civilization II: 1648 to the Present
00012	College French: Levels 1 and 2
00013	College German: Levels 1 and 2
00014	College Spanish: Levels 1 and 2
00015	American Literature
00016	Analysis and Interpretation of Literature
00017	College Composition
00018	English Literature
00019	Freshman English
00020	Calculus with Elementary Functions
00021	College Algebra
00022	Trigonometry
00023	College Algebra with Trigonometry
00024	General Biology
00025	General Chemistry
00026	Information Systems and Computer Applications
00027	Introduction to Management
00028	Introductory Accounting
00029	Introductory Business Law
00030	Introductory Marketing

GRADUATE RECORD EXAMINATION (GRE) GENERAL TEST (Test code 821)

00001	Verbal
00002	Quantitative
00003	Analytical

GRADUATE RECORD EXAMINATION (GRE) SUBJECT TESTS (Test code 822)

00001	Biochemistry, Cell and Molecular Biology (B22)
00002	Biology (B24)
00003	Chemistry (C27)
00004	Computer Science (C29)
00005	Economics (E31)
00006	Education (E34)
00007	Engineering (E37)
00008	Geology (G47)
00009	History (H57)
00010	Literature in English (L64)
00011	Mathematics (M67)
00012	Revised Music (M72)
00013	Physics (P77)
00014	Political Science (P79)
00015	Psychology (P81)
00016	Sociology (S87)

PRE-PROFESSIONAL SKILLS TEST (PPST) (Test code 826)

00001	Reading
00002	Mathematics
00003	Writing
00004	Grammar
00005	Fluency
00006	Overall Comprehension

Appendix F – SubtestCode and SubtestName (Continued)

TEST OF SPOKEN ENGLISH (TSE) (Test code 828)

00001	Pronunciation
00002	Grammar
00003	Fluency
00004	Overall Comprehension

VETERINARY COLLEGE ADMISSION TEST (VCAT) (Test code 830)

00001	Verbal Ability
00002	Biology
00003	Chemistry
00004	Quantitative Ability
00005	Reading Comprehension

THE COLLEGE BOARD'S ADVANCED PLACEMENT PROGRAM (Test code 831)

00001	U.S. History
00002	Art History
00003	Art - Drawing
00004	Art - General
00005	Biology
00006	Chemistry
00007	Comp Sci - A
00008	Comp Sci - B
00009	Economics - Micro
00010	Economics - Macro
00011	English Language/Comp
00012	English Literature/Comp
00013	European History
00014	French Language
00015	French Literature
00016	German Language
00017	Govt & Pol - US
00018	Govt & Pol - Comp
00019	Latin - Vergil
00020	Latin - Cat Hor
00021	Calculus AB
00022	Calculus BC
00023	Music List & Lit
00024	Music Theory
00025	Physics
00026	Physics C - Mech
00027	Physics C - E & M
00028	Psychology
00029	Spanish Language
00030	Spanish Literature

Appendix G – EducationSubtestCode and EducationSubtestName

Note: This is the new set of codes for Subtests that has been approved by the PESC Workgroup for Education Test Score Reporting and the Application for Admission

Appendix G – EducationSubtestCode and EducationSubtestName	
Subtest Code	**Subtest Name**
Algebra	Algebra
Algebra1	Algebra 1
AlgebraGeometryCoordinate	Algebra/Coordinate Geometry
Analytical	Analytical Writing
Biochemistry	Biochemistry
Biology	Biology
BiologyCell	Cell Biology
BiologyCellularAndMolecular	Cellular and Molecular Biology
BiologyMolecularAndGenetics	Molecular Biology and Genetics
BiologyOrganismal	Organismal Biology
Chemistry	Chemistry
CompositeScore	Composite
Comprehension	Comprehension
Computation	Computation
ConceptsApplications	Concepts/Applications
EcologyAndEvolution	Ecology and Evolution
English	English
EnglishA	English A
EnglishB	English B
EnglishLanguageArts	English-Language Arts
EnglishRhetoricalSkills	English: Rhetorical Skills
EnglishTestOfStandardWritten	Test of Standard Written English
EnglishUsageMechanics	English: Usage/Mechanics
Essay	Essay 1
Expression	Expression
Fit	Personal Skills: Fit
GeometryTrigonometry	Geometry/Trigonometry
HistoryAmerican	History (American)
HistoryEuropean	History (European)
InformationLocating	Locating Information
InterestArts	Interest in Arts
InterestBusinessContact	Interest in Business Contact
InterestBusinessOperations	Interest in Business Operations
InterestScience	Interest in Science
InterestSocialScience	Interest in Social Science
InterestTechnical	Interest Technical
LanguageArts	Language Arts

Appendix G – EducationSubtestCode and EducationSubtestName

Subtest Code	Subtest Name
LanguageForeignA	Foreign Language A
LanguageForeignB	Foreign Language B
Listening	Listening
ListeningComprehension	Listening Comprehension
LiteraryResponses	Literary Responses and Analysis
LiteratureAndArtsInterpreting	Interpreting Literature and the Arts
Math	Mathematics
MathAlgebraPreAlgebra	Mathematics: Pre-algebra/Algebra
MathApplied	Applied Mathematics
MathElementaryPreAlgebra	Mathematics: Pre-algebra/elementary
MathGeometry	Mathematics: Geometry
MathIntermediate	Mathematics: Intermediate
MathPlaneGeometryTrigonometry	Mathematics: Plane Geometry and Trigonometry
MeasurementAndGeometry	Measurement & Geometry
Mechanics	Mechanics
NumberSense	Number Sense
Observation	Observation
OtherSubtest	Other subtest
Performance	Personal Skills: Performance
Physics	Physics
ProbabilityAndStatistics	Probability and Statistics
PsychologyExperimental	Experimental Psychology
PsychologySocial	Social Psychology
Quantitative	Quantitative
Reading	Reading
ReadingArtsLiterature	Reading: Arts/Literature
ReadingComprehension	Reading Comprehension
ReadingInformational	Reading for Information
ReadingSocialStudiesScience	Reading: Social Studies/Science
Science	Science
SocialStudies	Social Studies
Spelling	Spelling
Talent	Personal Skills: Talent
Teamwork	Teamwork
TechnologyApplied	Applied Technology
Total	Total
TotalScore	Total
Usage	Usage
Verbal	Verbal
Vocabulary	Vocabulary
WordAnalysis	Word Analysis
Writing	Writing
WritingAnalytical	Analytical Writing Assessment
WritingBusiness	Business Writing

Appendix G – EducationSubtestCode and EducationSubtestName

Subtest Code	Subtest Name
WritingConventions	Writing Conventions
WritingEnglish	Combined Writing/English
WritingStrategies	Writing Strategies
WrittenExpressionAndStructure	Structure and Written Expression

Appendix H – CourseAcademicGradeScaleCode

I. Five or more passing grades (alpha with +/-)												
Code	**Grades Used**											
Wt	4.0	3.7	3.3	3.0	2.7	2.3	2.0	1.7	1.3	1.0	0.7	0.0
01	A	A-	B+	B	B-	C+	C	C-	D+	D	D-	F
02	A+,A	A-	B+	B	B-	C+	C	C-	D+	D	D-	F
03	A		B+	B		C+	C		D+	D		F
04	A+, A		B+	B		C+	C		D+	D		F
05	A+, A	A-	B+	B	B-	C+	C	C-	D+	D		F
06	A	A-	B+	B	B-	C+	C	C-				F
07	A		B+	B		C+	C			D		F
08	A	A-	B+	B	B-	C+	C	C-	D+	D		F
09	A	A-	B+	B	B-	C+	C	C-		D		F
10	A	A-	B+	B	B-	C+	C	C-	D+	D	D-	E/NC
11	A+, A	A-	B+	B	B-	C+	C	C-				
12	A+, A	A-	B+	B	B-	C+	C	C-	D+	D	D-	
13	A	A-	B+	B	B-	C+	C	C-	D+	D	D-	
14	Non-standard system using 5 or more alpha grades, no "F"											
15	Non-standard system using 5 or more alpha grades, and "F"											

II. ABCD/F with Halfstep Grades (AB, BC, etc.)									
Code	**Grades Used**								
Wt	4.0	3.5	3.0	2.5	2.0	1.5	1.0	0.5	0.0
16	A	AB	B	BC	C	CD	D	DF	F
17	A	AB	B	BC	C		D		F
18	A		B	C+	C		D		F
19	A	B+	B	C+	C	D+	D		F
20	A	B+	B	C+	C		D		F
21	A	B+	B	C+	C	C-	D		F
22	A+,A	B+	B	C+	C	D+	D		F
23	Other ABCDF system with halfstep grades, no "F" grade								
24	Other ABCDF system with halfstep grades and "F" grade								

Appendix H – CourseAcademicGradeScaleCode (Continued)

III. ABCD/F Type (4 passing letter grades)					
Code	**Grades Used**				
Wt	4.0	3.0	2.0	1.0	0.0
25	A	B	C	D	F
26	A	B	C	D	NC/N
27	A	B	C	D	E
28	H	S+	S	S-	U
29	E	S	M	I	F
30	DN	HP	P	HCO	NC
31	D	E	G	Q	U/F
32	H	E	G	P	U
33	S	H	P	LP	F
34	E	VG	G	P	F
35	HO	HP	PA	CR	NC
36	A	B	C	D	
37	A	B	C	D	U/R
38	Other ABCD/F type system, no "F" grade				
39	Other ABCD/F type system, with "F" grade				

IV. ABC/F Type (3 passing letter grades)				
Code	**Grades Used**			
Wt	4.0	3.0	2.0	0.0
40	A	B	C	F
41	H	HP	CR	NC
42	H	HP	P	F
43	A	B	C	NC
44	A	B	C	
45	H	HP	P	NP
46	HH	H	P	
47	HH	H	P	F
48	E	G	P	U/F
53	Other ABC/F type system, with no "F" grade			
54	Other ABC/F type system, with "F" grade			

Appendix H – CourseAcademicGradeScaleCode

V. Graduate School Grading Systems (not normally found in Manual)					
Code	**Grades Used**				
Wt	4.0	3.7	3.0	2.7	0.0
49	H	HP	P	LP	U/F
50	H	HP	P		F
51	DIST	HIGH PASS	PASS	LOW PASS	F
52	H	HP	P		U

VI. Pass/Fail Type (one or two passing grades)	
Code	**Grades Used**
Two passing grades, each converted to an American Medical Colleges Admissions Service (AMCAS) grade of "P"; failing grade converted to "N"	
55	Pass/Fail: HP and P, F
56	Pass/Fail: H and P, F
57	Pass/Fail: HP and P, N/NC
58	Pass/Fail: H and P, U
59	Other Pass/Fail types with two passing grades
One passing grade, converted to AMCAS grade of "P"; failing grade converted to AMCAS grade of "N"	
60	Pass/Fail: P, F
61	Pass/Fail: SAT, U
62	Pass/Fail: CR, NC
63	Pass/Fail: S, U
64	Other Pass/Fail types with one passing grade

Appendix H – CourseAcademicGradeScaleCode (Continued)

VII. Numeric - Percent Type												
Code	**Grades Used**											
Wt	4.0	3.7	3.3	3.0	2.7	2.3	2.0	1.7	1.3	1.0	0.7	0.0
65	100-93	92-90	89-87	86-83	82-80	79-77	76-73	72-70	69-67	66-63	62-60	59-0
66	100-90			89-80			79-70			69-60		59-0
67	100-94	93-90		89-85			84-75			74-70		69-0
68	100-90			89-80			79-70			69-65		64-0
69	100-93			92-85			84-77			76-70		69-0
70	100-93			92-84			83-75			74-70		69-0
71	100-90			89-80		79-76	75-70			69-60		59-0
72	100-90		89-85	84-80		79-75	74-70					69-0
73	Other numeric grading system - percent type											

VIII. Numeric - Percent Type												
Code	**Grades Used**											
Wt	4.0	3.7	3.3	3.0	2.7	2.3	2.0	1.7	1.3	1.0	0.7	0.0
74	4.0	3.7	3.3	3.0	2.7	2.3	2.0	1.7	1.3	1.0	0.7	0.0
77	1			2			3			4		5
79	4.0			3.0			2.0			1.0		0.0
80	1+,1	1-	2+	2	2-	3+	3	3-	4+	4	4-	5/6
81	3.0			2.0			1.0					0.0
82	Other numeric grading system - 4.0 or integer type											

IX. Numeric (4.0 type) Grading Systems using Halfstep Grades									
Code	**Grades Used**								
Wt	4.0	3.5	3.0	2.5	2.0	1.5	1.0	0.5	0.0
76	4.0	3.5	3.0	2.5	2.0	1.5	1.0	0.5	0.0
78	4.0	3.5	3.0	2.5	2.0		1.0		0.0
82	Other numeric grading system - 4.0 or integer type								
75	Continuous 4.0 scale (4.0 to 0.0)								

Appendix H – CourseAcademicGradeScaleCode (Continued)

X. Numeric - Canadian Type												
Code	**Grades Used**											
Wt	4.0	3.7	3.3	3.0	2.7	2.3	2.0	1.7	1.3	1.0	0.7	0.0
83	9	8	7		6	5		4	3			2,1
84	10,9	8	7		6	5		4	3	2	1	0
85	100-87	86-80	79-76	75-73	72-70	69-66	65-63	62-60	59-56	55-53	52-50	49-0
86	100-84	83-75	74-72	71-69	68-66	65-64	63-62	61-60	59-56	55-53	52-50	49-0
87	100-87	86-80	79-75	74-70	69-65	64-60	59-55	54-50				49-0
88	100-87	86-80	79-75	74-70	69-65	64-62	61-59	58-55	54-52	51-48	47-45	44-0
89	Other numeric grading system – Canadian											
99	Grading Scale Unknown											

Appendix L – Sample PESC XML College Transcript Version 1.2.0


```
<?xml version="1.0" encoding="UTF-8"?>
<!-- edited with XMLSPY v2010 (http://www.altova.com) -->
<!--Sample XML file generated by XMLSPY v2010 (http://www.altova.com)-->
<ColTrn:CollegeTranscript xmlns:ColTrn="urn:org:pesc:message:CollegeTranscript:v1.2.0"
xmlns:AcRec="urn:org:pesc:sector:AcademicRecord:v1.5.0"
xmlns:core="urn:org:pesc:core:CoreMain:v1.8.0" xmlns:xsi="http://www.w3.org/2001/XMLSchema-instance"
xsi:schemaLocation="urn:org:pesc:message:CollegeTranscript:v1.2.0
CollegeTranscript_v1.2.0.xsd">
    <TransmissionData>
        <DocumentID>050330001</DocumentID>
        <CreatedDateTime>2005-02-02T10:04:29-05:00</CreatedDateTime>
        <DocumentTypeCode>RequestedRecord</DocumentTypeCode>
        <TransmissionType>Original</TransmissionType>
        <Source>
            <Organization>
                <ATP>006882</ATP>
                <LocalOrganizationID>
                    <LocalOrganizationIDCode>123456</LocalOrganizationIDCode>
                    <LocalOrganizationIDQualifier>TX</LocalOrganizationIDQualifier>
                </LocalOrganizationID>
                <OrganizationName>THE UNIVERSITY OF TEXAS AT AUSTIN</OrganizationName>
                <Contacts>
                    <Address>
                        <AddressLine>Office of the Registrar</AddressLine>
                        <City>Austin</City>
                        <StateProvinceCode>TX</StateProvinceCode>
                        <PostalCode>78712</PostalCode>
                        <AttentionLine>Jane Shaugness</AttentionLine>
                    </Address>
                    <Phone>
                        <AreaCityCode>512</AreaCityCode>
                        <PhoneNumber>4757638</PhoneNumber>
                    </Phone>
                    <FaxPhone>
                        <AreaCityCode>512</AreaCityCode>
                        <PhoneNumber>4757600</PhoneNumber>
                    </FaxPhone>
                    <Email>
                        <EmailAddress>Registrar@mail.utexas.edu</EmailAddress>
                    </Email>
                    <URL>
                        <URLAddress>www.utexas.edu</URLAddress>
                    </URL>
                </Contacts>
                <Accreditation>
                    <AccreditingBodyCode>SACS</AccreditingBodyCode>
                    <AccreditingBodyName>Southern Association of Colleges and
Schools</AccreditingBodyName>
                </Accreditation>
            </Organization>
        </Source>
        <Destination>
            <Organization>
```

```
                <FICE>001506</FICE>
                <LocalOrganizationID>
                    <LocalOrganizationIDCode>1234</LocalOrganizationIDCode>
                    <LocalOrganizationIDQualifier>FL</LocalOrganizationIDQualifier>
                </LocalOrganizationID>
                <OrganizationName>Miami Dade College</OrganizationName>
            </Organization>
        </Destination>
        <RequestTrackingID>23456778009</RequestTrackingID>
    </TransmissionData>
    <Student>
        <Person>
            <SSN>100000000</SSN>
            <Birth>
                <BirthDate>1967-07-14</BirthDate>
            </Birth>
            <Name>
                <NameCode>Legal</NameCode>
<FirstName>Test</FirstName>
                <MiddleName>Record</MiddleName>
                <MiddleName>Test</MiddleName>
                <LastName>Speede</LastName>
                <NameSuffix>IV</NameSuffix>
            </Name>
            <HighSchool>
                <OrganizationName>AUSTIN HIGH SCHOOL</OrganizationName>
                <CEEBACT>440320</CEEBACT>
            </HighSchool>
            <Contacts>
                <Address>
                    <AddressLine>1223 University Dr</AddressLine>
                    <City>Austin</City>
                    <StateProvinceCode>TX</StateProvinceCode>
                    <PostalCode>78211</PostalCode>
                    <ExpirationDate>2009-06-15</ExpirationDate>
                </Address>
                <Email>
                    <EmailAddress>TestSpeede@aol.com</EmailAddress>
                </Email>
            </Contacts>
            <Gender>
                <GenderCode>Female</GenderCode>
            </Gender>
            <Deceased>
                <DeceasedIndicator>true</DeceasedIndicator>
            </Deceased>
        </Person>
        <AcademicRecord>
            <School>
                <OrganizationName>AUSTIN HIGH SCHOOL</OrganizationName>
                <CEEBACT>440320</CEEBACT>
                <SchoolLevel>Secondary</SchoolLevel>
                <NoteMessage>LOCATION: AUSTIN, TX</NoteMessage>
            </School>
            <AcademicAward>
```

```
                <AcademicAwardLevel>B18</AcademicAwardLevel>
                <AcademicAwardDate>1985-05-01</AcademicAwardDate>
                <AcademicAwardTitle>Standard High School Diploma</AcademicAwardTitle>
<AcademicCompletionIndicator>true</AcademicCompletionIndicator>
            </AcademicAward>
        </AcademicRecord>
        <AcademicRecord>
            <School>
                <OrganizationName>AUSTIN COMMUNITY COLLEGE</OrganizationName>
                <ATP>006759</ATP>
                <SchoolOverrideCode>Transfer</SchoolOverrideCode>
                <SchoolLevel>Postsecondary</SchoolLevel>
                <NoteMessage>ATTENDED: 19880601-19880831</NoteMessage>
            </School>
        </AcademicRecord>
        <AcademicRecord>
            <School>
                <OrganizationName>TEXAS A and M UNIVERSITY COLLEGE
STATION</OrganizationName>
                <ATP>006003</ATP>
                <SchoolOverrideCode>Transfer</SchoolOverrideCode>
                <SchoolLevel>Postsecondary</SchoolLevel>
                <NoteMessage>ATTENDED: 19980901-19981231</NoteMessage>
            </School>
        </AcademicRecord>
        <AcademicRecord>
            <AcademicSummary>
                <AcademicSummaryType>All</AcademicSummaryType>
                <AcademicSummaryLevel>Undergraduate</AcademicSummaryLevel>
                <GPA>
                    <CreditHoursAttempted>159</CreditHoursAttempted>
                    <CreditHoursEarned>136</CreditHoursEarned>
                    <CreditUnit>Semester</CreditUnit>
                    <GradePointAverage>3.0915</GradePointAverage>
                    <CreditHoursforGPA>153</CreditHoursforGPA>
                </GPA>
            </AcademicSummary>
            <AcademicSession>
                <AcademicSessionDetail>
                    <SessionDesignator>1985-09</SessionDesignator>
                    <SessionDesignatorSuffix>1</SessionDesignatorSuffix>
                </AcademicSessionDetail>
                <School>
                    <OrganizationName>TEXAS A and M UNIVERSITY COLLEGE STATION
</OrganizationName>
                    <ATP>006003</ATP>
                    <SchoolOverrideCode>Transfer</SchoolOverrideCode>
                </School>
                <Course>
                    <CourseCreditBasis>Regular</CourseCreditBasis>
                    <CourseCreditUnits>Semester  </CourseCreditUnits>
                    <CourseCreditLevel>LowerDivision</CourseCreditLevel>
                    <CourseCreditValue>4</CourseCreditValue>
                    <CourseCreditEarned>4</CourseCreditEarned>
                    <CourseAcademicGradeScaleCode>25</CourseAcademicGradeScaleCode>
```

```
                <CourseAcademicGrade>A</CourseAcademicGrade>
                <CourseRepeatCode>NotCountedOther</CourseRepeatCode>
                <CourseCIPCode>999</CourseCIPCode>
                <CourseSubjectAbbreviation>SPN</CourseSubjectAbbreviation>
                <CourseNumber>406</CourseNumber>
                <OriginalCourseID>SPAN 105</OriginalCourseID>
                <CourseTitle>BEGINNING SPANISH 1</CourseTitle>
            </Course>
            <Course>
                <CourseCreditBasis>Regular</CourseCreditBasis>
                <CourseCreditUnits>Semester  </CourseCreditUnits>
                <CourseCreditLevel>LowerDivision</CourseCreditLevel>
                <CourseCreditValue>3</CourseCreditValue>
                <CourseCreditEarned>3</CourseCreditEarned>
                <CourseAcademicGradeScaleCode>25</CourseAcademicGradeScaleCode>
                <CourseAcademicGrade>A</CourseAcademicGrade>
                <CourseRepeatCode>NotCountedOther</CourseRepeatCode>
                <CourseCIPCode>999</CourseCIPCode>
                <CourseSubjectAbbreviation>HIS</CourseSubjectAbbreviation>
                <CourseNumber>315K</CourseNumber>
                <OriginalCourseID>HIST 105</OriginalCourseID>
                <CourseTitle>HISTORY OF THE US 1</CourseTitle>
            </Course>
        </AcademicSession>
        <AcademicSession>
            <AcademicSessionDetail>
                <SessionDesignator>1986-01</SessionDesignator>
                <SessionDesignatorSuffix>1</SessionDesignatorSuffix>
            </AcademicSessionDetail>
            <School>
                <OrganizationName>TEXAS A and M UNIVERSITY COLLEGE STATION
</OrganizationName>
                <ATP>006003</ATP>
                <SchoolOverrideCode>Transfer</SchoolOverrideCode>
            </School>
            <Course>
                <CourseCreditBasis>Regular</CourseCreditBasis>
                <CourseCreditUnits>Semester</CourseCreditUnits>
                <CourseCreditLevel>LowerDivision</CourseCreditLevel>
                <CourseCreditValue>4</CourseCreditValue>
                <CourseCreditEarned>4</CourseCreditEarned>
                <CourseAcademicGradeScaleCode>25</CourseAcademicGradeScaleCode>
                <CourseAcademicGrade>A</CourseAcademicGrade>
                <CourseRepeatCode>NotCountedOther</CourseRepeatCode>
                <CourseCIPCode>999</CourseCIPCode>
                <CourseSubjectAbbreviation>SPN</CourseSubjectAbbreviation>
                <CourseNumber>407</CourseNumber>
                <OriginalCourseID>SPAN 106</OriginalCourseID>
                <CourseTitle>BEGINNING SPANISH 2</CourseTitle>
            </Course>
        </AcademicSession>
        <AcademicSession>
            <AcademicSessionDetail>
                <SessionDesignator>1986-09</SessionDesignator>
                <SessionDesignatorSuffix>1</SessionDesignatorSuffix>
```

```
                <SessionName>FALL SEMESTER 1986</SessionName>
                <SessionType>Semester</SessionType>
            </AcademicSessionDetail>
            <AcademicProgram>
                <AcademicProgramName>NATURAL SCIENCES</AcademicProgramName>
            </AcademicProgram>
            <AcademicSummary>
                <NoteMessage>EFFECTIVE SPRING 1987 SCHOLASTIC
PROBATION</NoteMessage>
                <Delinquencies>ProbationGPA</Delinquencies>
            </AcademicSummary>
        </AcademicSession>
        <AcademicSession>
            <AcademicSessionDetail>
                <SessionDesignator>1986-09</SessionDesignator>
                <SessionDesignatorSuffix>2</SessionDesignatorSuffix>
                <SessionName>FALL SEMESTER 1986</SessionName>
                <SessionType>Semester</SessionType>
            </AcademicSessionDetail>
            <AcademicProgram>
                <AcademicProgramName>ENGINERING</AcademicProgramName>
            </AcademicProgram>
            <Course>
                <CourseCreditBasis>Regular</CourseCreditBasis>
                <CourseCreditUnits>Semester</CourseCreditUnits>
                <CourseCreditLevel>LowerDivision</CourseCreditLevel>
                <CourseCreditValue>3</CourseCreditValue>
                <CourseCreditEarned>3</CourseCreditEarned>
                <CourseAcademicGradeScaleCode>25</CourseAcademicGradeScaleCode>
                <CourseAcademicGrade>B</CourseAcademicGrade>
                <CourseCIPCode>999</CourseCIPCode>
                <CourseSubjectAbbreviation>GOV</CourseSubjectAbbreviation>
                <CourseNumber>310L</CourseNumber>
                <OriginalCourseID> </OriginalCourseID>
                <CourseTitle>AMERICAN GOVERNMENT</CourseTitle>
            </Course>
            <Course>
                <CourseCreditBasis>Regular</CourseCreditBasis>
                <CourseCreditUnits>Semester</CourseCreditUnits>
                <CourseCreditLevel>LowerDivision</CourseCreditLevel>
                <CourseCreditValue>3</CourseCreditValue>
                <CourseCreditEarned>0</CourseCreditEarned>
                <CourseAcademicGradeScaleCode>25</CourseAcademicGradeScaleCode>
                <CourseAcademicGrade>F</CourseAcademicGrade>
                <CourseCIPCode>999</CourseCIPCode>
                <CourseSubjectAbbreviation>HIS</CourseSubjectAbbreviation>
                <CourseNumber>309K</CourseNumber>
                <CourseTitle>WESTERN CIV IN MEDIEVAL TIMES</CourseTitle>
            </Course>
            <Course>
                <CourseCreditBasis>Regular</CourseCreditBasis>
                <CourseCreditUnits>Semester</CourseCreditUnits>
                <CourseCreditLevel>LowerDivision</CourseCreditLevel>
                <CourseCreditValue>3</CourseCreditValue>
                <CourseCreditEarned>0</CourseCreditEarned>
```

```
                <CourseAcademicGradeScaleCode>25</CourseAcademicGradeScaleCode>
                <CourseAcademicGrade>F</CourseAcademicGrade>
                <CourseCIPCode>999</CourseCIPCode>
                <CourseSubjectAbbreviation>M</CourseSubjectAbbreviation>
                <CourseNumber>305G</CourseNumber>
                <OriginalCourseID> </OriginalCourseID>
                <CourseTitle>ELEM FUNCTIONS-COORD GEOMETRY</CourseTitle>
            </Course>
            <AcademicSummary>
                <GPA>
                    <CreditHoursAttempted>13</CreditHoursAttempted>
                    <CreditHoursEarned>7</CreditHoursEarned>
                    <CreditUnit>Semester</CreditUnit>
                    <GradePointAverage>1.3076</GradePointAverage>
                    <CreditHoursforGPA>13</CreditHoursforGPA>
                </GPA>
            </AcademicSummary>
        </AcademicSession>
        <AcademicSession>
            <AcademicSessionDetail>
                <SessionDesignator>1988-01</SessionDesignator>
                <SessionDesignatorSuffix>2</SessionDesignatorSuffix>
                <SessionName>SPRING SEMESTER 1988</SessionName>
                <SessionType>Semester</SessionType>
            </AcademicSessionDetail>
            <AcademicProgram>
                <AcademicProgramName>LIBERAL ARTS</AcademicProgramName>
            </AcademicProgram>
            <Course>
                <CourseCreditBasis>Regular</CourseCreditBasis>
                <CourseCreditUnits>Semester</CourseCreditUnits>
                <CourseCreditLevel>UpperDivision</CourseCreditLevel>
                <CourseCreditValue>3</CourseCreditValue>
                <CourseCreditEarned>3</CourseCreditEarned>
                <CourseAcademicGradeScaleCode>25</CourseAcademicGradeScaleCode>
                <CourseAcademicGrade>A</CourseAcademicGrade>
                <CourseCIPCode>999</CourseCIPCode>
                <CourseSubjectAbbreviation>GOV</CourseSubjectAbbreviation>
                <CourseNumber>320K</CourseNumber>
                <OriginalCourseID> </OriginalCourseID>
                <CourseTitle>AMER CONSTITUTIONAL DEVEL</CourseTitle>
            </Course>
            <AcademicSummary>
                <AcademicSummaryLevel>Undergraduate</AcademicSummaryLevel>
                <GPA>
                    <CreditHoursAttempted>15</CreditHoursAttempted>
                    <CreditHoursEarned>15</CreditHoursEarned>
                    <CreditUnit>Semester</CreditUnit>
                    <GradePointAverage>3.4</GradePointAverage>
                    <CreditHoursforGPA>15</CreditHoursforGPA>
                </GPA>
                <NoteMessage>EFFECTIVE SUMMER 1988 PROBATION ENDED
</NoteMessage>
                <Delinquencies>GoodStanding</Delinquencies>
            </AcademicSummary>
```

```
</AcademicSession>
<AcademicSession>
    <AcademicSessionDetail>
        <SessionDesignator>1988-06</SessionDesignator>
        <SessionDesignatorSuffix>1</SessionDesignatorSuffix>
        <SessionName>SUMMER SEMESTER 1988</SessionName>
        <SessionType>SummerSession</SessionType>
    </AcademicSessionDetail>
    <AcademicProgram>
        <AcademicProgramName>LIBERAL ARTS</AcademicProgramName>
    </AcademicProgram>
    <Course>
        <CourseCreditBasis>CreditByExam</CourseCreditBasis>
        <CourseCreditUnits>Semester</CourseCreditUnits>
        <CourseCreditLevel>UpperDivision</CourseCreditLevel>
        <CourseCreditValue>3</CourseCreditValue>
        <CourseCreditEarned>3</CourseCreditEarned>
        <CourseAcademicGradeScaleCode>25</CourseAcademicGradeScaleCode>
        <CourseAcademicGrade>A</CourseAcademicGrade>
        <CourseCIPCode>999</CourseCIPCode>
        <CourseSubjectAbbreviation>HIS</CourseSubjectAbbreviation>
        <CourseNumber>346K</CourseNumber>
        <OriginalCourseID> </OriginalCourseID>
        <CourseTitle>LATIN AMERICA BEFORE 1810</CourseTitle>
        <CourseOverrideSchool>
            <OrganizationName>AUSTIN COMMUNITY COLLEGE</OrganizationName>
            <ATP>006759</ATP>
        </CourseOverrideSchool>
    </Course>
</AcademicSession>
<AcademicSession>
    <AcademicSessionDetail>
        <SessionDesignator>1988-06</SessionDesignator>
        <SessionDesignatorSuffix>2</SessionDesignatorSuffix>
    </AcademicSessionDetail>
    <AcademicProgram>
        <AcademicProgramName>LIBERAL ARTS</AcademicProgramName>
    </AcademicProgram>
    <Course>
        <CourseCreditBasis>Regular</CourseCreditBasis>
        <CourseCreditUnits>Semester</CourseCreditUnits>
        <CourseCreditLevel>LowerDivision</CourseCreditLevel>
        <CourseCreditValue>3</CourseCreditValue>
        <CourseCreditEarned>3</CourseCreditEarned>
        <CourseAcademicGradeScaleCode>25</CourseAcademicGradeScaleCode>
        <CourseAcademicGrade>A</CourseAcademicGrade>
        <CourseRepeatCode>NotCountedOther</CourseRepeatCode>
        <CourseCIPCode>999</CourseCIPCode>
        <CourseSubjectAbbreviation>E</CourseSubjectAbbreviation>
        <CourseNumber>316K</CourseNumber>
        <OriginalCourseID>ENG 2633</OriginalCourseID>
        <CourseTitle>AMERICAN LITERATURE 1</CourseTitle>
    </Course>
    </AcademicSession>
<AcademicSession>
```

```
        <AcademicSessionDetail>
            <SessionDesignator>1989-01</SessionDesignator>
            <SessionDesignatorSuffix>1</SessionDesignatorSuffix>
            <SessionName>SPRING SEMESTER 1989</SessionName>
            <SessionType>Semester</SessionType>
        </AcademicSessionDetail>
        <AcademicProgram>
            <AcademicProgramName>LIBERAL ARTS</AcademicProgramName>
        </AcademicProgram>
        <Course>
            <CourseCreditBasis>Regular</CourseCreditBasis>
            <CourseCreditUnits>Semester</CourseCreditUnits>
            <CourseCreditLevel>UpperDivision</CourseCreditLevel>
            <CourseCreditValue>3</CourseCreditValue>
            <CourseCreditEarned>3</CourseCreditEarned>
            <CourseAcademicGradeScaleCode>25</CourseAcademicGradeScaleCode>
            <CourseAcademicGrade>A</CourseAcademicGrade>
            <CourseCIPCode>999</CourseCIPCode>
            <CourseSubjectAbbreviation>GOV</CourseSubjectAbbreviation>
            <CourseNumber>327L</CourseNumber>
            <CourseTitle>PUBLIC OPINION AND AMER POL</CourseTitle>
        </Course>
        <Course>
            <CourseCreditBasis>Regular</CourseCreditBasis>
            <CourseCreditUnits>Semester</CourseCreditUnits>
            <CourseCreditLevel>LowerDivision</CourseCreditLevel>
            <CourseCreditValue>3</CourseCreditValue>
            <CourseCreditEarned>3</CourseCreditEarned>
            <CourseAcademicGradeScaleCode>25</CourseAcademicGradeScaleCode>
            <CourseAcademicGrade>A</CourseAcademicGrade>
            <CourseCIPCode>999</CourseCIPCode>
            <CourseSubjectAbbreviation>BIO</CourseSubjectAbbreviation>
            <CourseNumber>301M</CourseNumber>
            <CourseTitle>ECOLOGY, EVOLUTION, &amp;amp; SOCIETY</CourseTitle>
        </Course>
        <AcademicSummary>
            <AcademicSummaryLevel>Undergraduate</AcademicSummaryLevel>
            <GPA>
                <CreditHoursAttempted>12</CreditHoursAttempted>
                <CreditHoursEarned>12</CreditHoursEarned>
                <CreditUnit>Semester</CreditUnit>
                <GradePointAverage>3.75</GradePointAverage>
                <CreditHoursforGPA>12</CreditHoursforGPA>
            </GPA>
        </AcademicSummary>
    </AcademicSession>
    <AcademicSession>
        <AcademicSessionDetail>
            <SessionDesignator>1989-09</SessionDesignator>
            <SessionDesignatorSuffix>1</SessionDesignatorSuffix>
            <SessionName>FALL SEMESTER 1989</SessionName>
            <SessionType>Semester</SessionType>
        </AcademicSessionDetail>
        <AcademicProgram>
            <AcademicProgramName>LIBERAL ARTS</AcademicProgramName>
```

```
</AcademicProgram>
<Course>
    <CourseCreditBasis>Regular</CourseCreditBasis>
    <CourseCreditUnits>Semester  </CourseCreditUnits>
    <CourseCreditLevel>UpperDivision</CourseCreditLevel>
    <CourseCreditValue>3</CourseCreditValue>
    <CourseCreditEarned>3</CourseCreditEarned>
    <CourseAcademicGradeScaleCode>25</CourseAcademicGradeScaleCode>
    <CourseAcademicGrade>A</CourseAcademicGrade>
    <CourseCIPCode>999</CourseCIPCode>
    <CourseSubjectAbbreviation>GOV</CourseSubjectAbbreviation>
    <CourseNumber>357M</CourseNumber>
    <CourseTitle>JURISPRUDENCE</CourseTitle>
</Course>
<Course>
    <CourseCreditBasis>Regular</CourseCreditBasis>
    <CourseCreditUnits>Semester  </CourseCreditUnits>
    <CourseCreditLevel>UpperDivision</CourseCreditLevel>
    <CourseCreditValue>3</CourseCreditValue>
    <CourseCreditEarned>3</CourseCreditEarned>
    <CourseAcademicGradeScaleCode>25</CourseAcademicGradeScaleCode>
    <CourseAcademicGrade>A</CourseAcademicGrade>
    <CourseCIPCode>999</CourseCIPCode>
    <CourseSubjectAbbreviation>GOV</CourseSubjectAbbreviation>
    <CourseNumber>358</CourseNumber>
    <CourseTitle>INTRO TO PUBLIC ADMINISTRATION</CourseTitle>
</Course>
<Course>
    <CourseCreditBasis>Regular</CourseCreditBasis>
    <CourseCreditUnits>Semester  </CourseCreditUnits>
    <CourseCreditLevel>UpperDivision</CourseCreditLevel>
    <CourseCreditValue>3</CourseCreditValue>
    <CourseCreditEarned>3</CourseCreditEarned>
    <CourseAcademicGradeScaleCode>25</CourseAcademicGradeScaleCode>
    <CourseAcademicGrade>A</CourseAcademicGrade>
    <CourseCIPCode>999</CourseCIPCode>
    <CourseSubjectAbbreviation>HIS</CourseSubjectAbbreviation>
    <CourseNumber>344D</CourseNumber>
    <CourseTitle>ENGLAND IN THE MIDDLE AGES</CourseTitle>
</Course>
<Course>
    <CourseCreditBasis>Regular</CourseCreditBasis>
    <CourseCreditUnits>Semester  </CourseCreditUnits>
    <CourseCreditLevel>UpperDivision</CourseCreditLevel>
    <CourseCreditValue>3</CourseCreditValue>
    <CourseCreditEarned>3</CourseCreditEarned>
    <CourseAcademicGradeScaleCode>25</CourseAcademicGradeScaleCode>
    <CourseAcademicGrade>A</CourseAcademicGrade>
    <CourseCIPCode>999</CourseCIPCode>
    <CourseSubjectAbbreviation>HIS</CourseSubjectAbbreviation>
    <CourseNumber>350L</CourseNumber>
    <CourseTitle>FIRST LADIES IN THE 20TH CEN</CourseTitle>
</Course>
<AcademicSummary>
    <AcademicSummaryLevel>Undergraduate</AcademicSummaryLevel>
```

```
            <GPA>
                <CreditHoursAttempted>12</CreditHoursAttempted>
                <CreditHoursEarned>12</CreditHoursEarned>
                <CreditUnit>Semester  </CreditUnit>
                <GradePointAverage>4</GradePointAverage>
                <CreditHoursforGPA>12</CreditHoursforGPA>
            </GPA>
        </AcademicSummary>
    </AcademicSession>
    <AcademicSession>
        <AcademicSessionDetail>
            <SessionDesignator>2001-01</SessionDesignator>
            <SessionDesignatorSuffix>1</SessionDesignatorSuffix>
            <SessionName>SPRING SEMESTER 2001</SessionName>
            <SessionType>Semester</SessionType>
        </AcademicSessionDetail>
        <AcademicProgram>
            <AcademicProgramName>INTERNATIONAL EXCHANGE</AcademicProgramName>
            <NoteMessage>CURRIC: LIBERAL ARTS</NoteMessage>
        </AcademicProgram>
    </AcademicSession>
    <AcademicSession>
        <AcademicSessionDetail>
            <SessionDesignator>20010-01</SessionDesignator>
            <SessionDesignatorSuffix>2</SessionDesignatorSuffix>
            <SessionName>SPRING SEMESTER 2001</SessionName>
            <SessionType>Semester</SessionType>
        </AcademicSessionDetail>
        <AcademicProgram>
            <AcademicProgramName>FINE ARTS</AcademicProgramName>
        </AcademicProgram>
        <Course>
            <CourseCreditBasis>Regular</CourseCreditBasis>
            <CourseCreditUnits>Semester  </CourseCreditUnits>
            <CourseCreditLevel>LowerDivision</CourseCreditLevel>
            <CourseCreditValue>3</CourseCreditValue>
            <CourseCreditEarned>3</CourseCreditEarned>
            <CourseAcademicGradeScaleCode>25</CourseAcademicGradeScaleCode>
            <CourseAcademicGrade>A</CourseAcademicGrade>
            <CourseCIPCode>999</CourseCIPCode>
            <CourseSubjectAbbreviation>T D</CourseSubjectAbbreviation>
            <CourseNumber>303C</CourseNumber>
            <CourseTitle>TRAINING SPEAKING VOICE-CXS</CourseTitle>
        </Course>
        <Course>
            <CourseCreditBasis>Regular</CourseCreditBasis>
            <CourseCreditUnits>Semester</CourseCreditUnits>
            <CourseCreditLevel>UpperDivision</CourseCreditLevel>
            <CourseCreditValue>3</CourseCreditValue>
            <CourseCreditEarned>3</CourseCreditEarned>
            <CourseAcademicGradeScaleCode>25</CourseAcademicGradeScaleCode>
            <CourseAcademicGrade>B</CourseAcademicGrade>
            <CourseCIPCode>999</CourseCIPCode>
            <CourseSubjectAbbreviation>E</CourseSubjectAbbreviation>
            <CourseNumber>321</CourseNumber>
```

```
            <CourseTitle>SHAKESPEARE: SELECTED PLAYS</CourseTitle>
        </Course>
        <Course>
            <CourseCreditBasis>Regular</CourseCreditBasis>
            <CourseCreditUnits>Semester  </CourseCreditUnits>
            <CourseCreditLevel>UpperDivision</CourseCreditLevel>
            <CourseCreditValue>3</CourseCreditValue>
            <CourseCreditEarned>3</CourseCreditEarned>
            <CourseAcademicGradeScaleCode>25</CourseAcademicGradeScaleCode>
            <CourseAcademicGrade>B</CourseAcademicGrade>
            <CourseCIPCode>999</CourseCIPCode>
            <CourseSubjectAbbreviation>GOV</CourseSubjectAbbreviation>
            <CourseNumber>365N</CourseNumber>
            <CourseTitle>2-IMMIGRATION AND COMPAR POLIT</CourseTitle>
        </Course>
        <Course>
            <CourseCreditBasis>Regular</CourseCreditBasis>
            <CourseCreditUnits>Semester  </CourseCreditUnits>
            <CourseCreditLevel>LowerDivision</CourseCreditLevel>
            <CourseCreditValue>3</CourseCreditValue>
            <CourseCreditEarned>3</CourseCreditEarned>
            <CourseAcademicGradeScaleCode>25</CourseAcademicGradeScaleCode>
            <CourseAcademicGrade>A</CourseAcademicGrade>
            <CourseCIPCode>999</CourseCIPCode>
            <CourseSubjectAbbreviation>TLC</CourseSubjectAbbreviation>
            <CourseNumber>311</CourseNumber>
            <CourseTitle>INFORMATION IN CYBERSPACE</CourseTitle>
        </Course>
        <Course>
            <CourseCreditBasis>Regular</CourseCreditBasis>
            <CourseCreditUnits>Semester  </CourseCreditUnits>
            <CourseCreditLevel>LowerDivision</CourseCreditLevel>
            <CourseCreditValue>3</CourseCreditValue>
            <CourseCreditEarned>3</CourseCreditEarned>
            <CourseAcademicGradeScaleCode>25</CourseAcademicGradeScaleCode>
            <CourseAcademicGrade>A</CourseAcademicGrade>
            <CourseCIPCode>999</CourseCIPCode>
            <CourseSubjectAbbreviation>S W</CourseSubjectAbbreviation>
            <CourseNumber>310</CourseNumber>
            <CourseTitle>INTRO TO SOCL WORK &amp; SOCL WELF</CourseTitle>
        </Course>
        <AcademicSummary>
            <GPA>
                <CreditHoursAttempted>15</CreditHoursAttempted>
                <CreditHoursEarned>15</CreditHoursEarned>
                <CreditUnit>Semester  </CreditUnit>
                <GradePointAverage>3.6</GradePointAverage>
                <CreditHoursforGPA>15</CreditHoursforGPA>
            </GPA>
        </AcademicSummary>
    </AcademicSession>
    <AcademicSession>
        <AcademicSessionDetail>
            <SessionDesignator>2001-09</SessionDesignator>
            <SessionDesignatorSuffix>1</SessionDesignatorSuffix>
```

```
        <SessionName>FALL SEMESTER 2001</SessionName>
        <SessionType>Semester</SessionType>
    </AcademicSessionDetail>
    <AcademicProgram>
        <AcademicProgramName>INTERNATIONAL EXCHANGE</AcademicProgramName>
        <NoteMessage>CURRIC: LIBERAL ARTS</NoteMessage>
    </AcademicProgram>
    <Course>
        <CourseCreditBasis>Regular</CourseCreditBasis>
        <CourseCreditUnits>Semester  </CourseCreditUnits>
        <CourseCreditLevel>Graduate</CourseCreditLevel>
        <CourseCreditValue>3</CourseCreditValue>
        <CourseCreditEarned>3</CourseCreditEarned>
        <CourseAcademicGradeScaleCode>25</CourseAcademicGradeScaleCode>
        <CourseAcademicGrade>A</CourseAcademicGrade>
        <CourseCIPCode>999</CourseCIPCode>
        <CourseSubjectAbbreviation>PHL</CourseSubjectAbbreviation>
        <CourseNumber>388</CourseNumber>
        <CourseTitle>CONFERENCE COURSE</CourseTitle>
    </Course>
    <Course>
        <CourseCreditBasis>Regular</CourseCreditBasis>
        <CourseCreditUnits>Semester  </CourseCreditUnits>
        <CourseCreditLevel>Graduate</CourseCreditLevel>
        <CourseCreditValue>3</CourseCreditValue>
        <CourseCreditEarned>3</CourseCreditEarned>
        <CourseAcademicGradeScaleCode>501</CourseAcademicGradeScaleCode>
        <CourseAcademicGrade>CR</CourseAcademicGrade>
        <CourseRepeatCode>NotCountedOther</CourseRepeatCode>
        <CourseCIPCode>999</CourseCIPCode>
        <CourseSubjectAbbreviation>PHL</CourseSubjectAbbreviation>
        <CourseNumber>388C</CourseNumber>
        <CourseTitle>CONFERENCE COURSE</CourseTitle>
    </Course>
    <Course>
        <CourseCreditBasis>Regular</CourseCreditBasis>
        <CourseCreditUnits>Semester  </CourseCreditUnits>
        <CourseCreditLevel>Graduate</CourseCreditLevel>
        <CourseCreditValue>3</CourseCreditValue>
        <CourseCreditEarned>3</CourseCreditEarned>
        <CourseAcademicGradeScaleCode>25</CourseAcademicGradeScaleCode>
        <CourseAcademicGrade>A</CourseAcademicGrade>
        <CourseCIPCode>999</CourseCIPCode>
        <CourseSubjectAbbreviation>SOC</CourseSubjectAbbreviation>
        <CourseNumber>387J</CourseNumber>
        <CourseTitle>FUNDAMENTALS OF RESEARCH METHS</CourseTitle>
    </Course>
    <Course>
        <CourseCreditBasis>Regular</CourseCreditBasis>
        <CourseCreditUnits>Semester  </CourseCreditUnits>
        <CourseCreditLevel>Graduate</CourseCreditLevel>
        <CourseCreditValue>3</CourseCreditValue>
        <CourseCreditEarned>3</CourseCreditEarned>
        <CourseAcademicGradeScaleCode>25</CourseAcademicGradeScaleCode>
        <CourseAcademicGrade>B</CourseAcademicGrade>
```

```
                <CourseCIPCode>999</CourseCIPCode>
                <CourseSubjectAbbreviation>SOC</CourseSubjectAbbreviation>
                <CourseNumber>389K</CourseNumber>
                <CourseTitle>3-HUMAN MORTALITY</CourseTitle>
            </Course>
            <AcademicSummary>
                <AcademicSummaryLevel>Undergraduate</AcademicSummaryLevel>
                <GPA>
                    <CreditHoursAttempted>12</CreditHoursAttempted>
                    <CreditHoursEarned>12</CreditHoursEarned>
                    <CreditUnit>Semester  </CreditUnit>
                    <GradePointAverage>3.6666</GradePointAverage>
                    <CreditHoursforGPA>9</CreditHoursforGPA>
                </GPA>
            </AcademicSummary>
        </AcademicSession>
        </AcademicRecord>
    </Student>
</ColTrn:CollegeTranscript>
```

Appendix M

Record of Changes Made to Schema and Guide Since Version 1.0.0

Version 1.0.0

The initial version of the Implementation Guide was issued when the standard was approved in May 2004.

Version 1.1.0

Version 1.1.0 was prepared by the Workgroup in anticipation of the release of Version 1.1.0 of the College Transcript Schema. It contained changes that were made by the approval of the XML High School Transcript and those common data elements that were expected to be inherited into the XML College Transcript. Unfortunately, an error on the part of the Workgroup was that PESC never actually approved Version 1.1.0 at that time.

In that, we think, unpublished version, a new appendix G was added which lists ISO language codes which are used in the schema.

Version 1.1.1

Version 1.1.0 of the PESC XML College Transcript Schema was approved and released in October 2007.

Version 1.1.0 was a minor change to the schema.

This means that all those users of the schema that upgrade to the latest version (1.1.0) of the schema can receive and process all instance documents that were created using either Versions 1.0.0 or 1.1.0.

However, those users who are using Version 1.0.0 ***may*** not be able to receive all instance documents created with Version 1.1.0 of the schema. Any instance document that does not use the new optional data elements introduced in the newer version and does not use the new enumerated values for data elements that were contained in Version 1.0.0 may still be processed with no problems.

Changes made in Version 1.1.0 were as follows:

Diagrams: Many of the diagrams used for complex data elements were incorrect in the cardinality of some data elements. These diagrams were corrected in this version.

TransmissionData.Source.Organization: A new (13th) optional code set, MutuallyDefined, was added to the list of choice code sets to identify organizations and schools. Although it should be rarely needed, if a code cannot be found for a school or

other organization in one of the others, then trading partners can agree to create new mutually defined codes.

TransmissionData.Source.LocalOrganizationID: This was added to allow the inclusion of identifiers that are assigned to schools by states or provinces for organizations within those jurisdictions.

TransmissionData.Destination.Organization: A new (13th) optional code set, MutuallyDefined, was added to the list of choice code sets to identify organizations and schools. Although it should be rarely needed, if a code cannot be found for a school or other organization in one of the others, then trading partners can agree to create new mutually defined codes.

TransmissionData.Destination.LocalOrganizationID: This was added to allow the inclusion of identifiers that are assigned to schools by states or provinces for organizations within those jurisdictions.

Student.Person.HighSchool.OrganizationIDGroup: As noted above, a new choice code set of MutuallyDefined was added to the previous list of 12 code sets from which to choose.

Student.Person.Residency.CountyCode: A previous incorrect reference to this being an ISO code set was corrected. It now correctly refers to a US FIPS code set for counties in the US.

Student.AcademicRecord: A new optional complex data element called "StudentLevel" was added so that a school may include the student's year in school at the time the academic record was created.

Student.AcademicRecord.School: Once again, a new choice code set of "MutuallyDefined" and a new optional complex data element "LocalOrganizationID" were added.

Student.AcademicRecord.AcademicAward.AcademicAwardProgram.
ProgramSummary.AcademicSummaryType: Three new enumerated values were added (Weighted, NonWeighted, and Cumulative).

Student.AcademicRecord.AcademicAward.AcademicAwardProgram.
ProgramSummary.GPA: Two new optional data elements were added (GPARangeMinimum and GPARangeMaximum). In addition, some enumerated values with trailing spaces were included in "CreditUnit" in version 1.0.0. New values have been added without the trailing spaces, and the values with the trailing spaces will be deleted in a future release.

Student.AcademicRecord.AcademicAward.AcademicSummary.AcademicSummaryType: Three new enumerated values were added (Weighted, NonWeighted, and Cumulative).

Student.AcademicRecord.AcademicSummary.AcademicSummaryType: Three new enumerated values were added (Weighted, NonWeighted, and Cumulative).

Student.AcademicRecord.AcademicSummary.GPA: Two new optional data elements were added (GPARangeMinimum and GPARangeMaximum). In addition, some enumerated values with trailing spaces were included in "CreditUnit" in version 1.0.0. New values have been added without the trailing spaces, and the values with the trailing spaces will be deleted in a future release.

Student.AcademicRecord.AcademicSession.AcademicSessionDetail: In an attempt to get the College Transcript and the High School Transcript more similar, we added a new optional simple data element "SessionSchoolYear" which could also be used by postsecondary schools.

Student.AcademicRecord.AcademicSession.School: Once again, a new choice code set of "MutuallyDefined" and a new optional complex data element "LocalOrganizationID" were added.

Student.AcademicRecord.AcademicSession.Course: Three new optional data elements wer added ("CourseAcademicGradeStatusCode", "CourseGPAApplicabilityCode", and "AgencyCourseID"). Also, three new choice elements were added ("CourseNCESCode", "CourseSCEDCode", and "CourseSubjectAreaCode") in an attempt to add codes to describe content of high school courses. In addition, some enumerated values with trailing spaces were included in "CourseCreditUnits" in version 1.0.0. New values have been added without the trailing spaces, and the values with the trailing spaces will be deleted in a future release.

Student.AcademicRecord.AcademicSession.Course.CourseCreditBasis: Some descriptions of the enumerated values were provided. In addition, some enumerated values with trailing spaces were included in version 1.0.0. New values have been added without the trailing spaces, and the values with the trailing spaces will be deleted in a future release.

Student.AcademicRecord.AcademicSession.Course.CourseCreditUnits: Some descriptions of the enumerated values were provided. In addition, some enumerated values with trailing spaces were included in version 1.0.0. New values have been added without the trailing spaces, and the values with the trailing spaces will be deleted in a future release.

Student.AcademicRecord.AcademicSession.Course.CourseOverrideSchool: Once again, a new choice code set of "MutuallyDefined" and a new optional complex data element "LocalOrganizationID" were added.

Student.AcademicRecord.AcademicSession.AcademicSummary.AcademicSummaryType: Three new enumerated values were added (Weighted, NonWeighted, and Cumulative).

Student.AcademicRecord.AcademicSession.AcademicSummary.GPA: Two new optional data elements were added (GPARangeMinimum and GPARangeMaximum). In addition, some enumerated values with trailing spaces were included in "CreditUnit" in version 1.0.0. New values have been added without the trailing spaces, and the values with the trailing spaces will be deleted in a future release.

Student.AcademicRecord.Course: Three new optional data elements were added ("CourseAcademicGradeStatusCode", "CourseGPAApplicabilityCode", and "AgencyCourseID"). Also, three new choice elements were added ("CourseNCESCode", "CourseSCEDCode", and "CourseSubjectAreaCode") in an attempt to add codes to describe content of high school courses.

Student.AcademicRecord.Course.CourseCreditBasis: Some descriptions of the enumerated values were provided.

Student.AcademicRecord.Course.CourseCreditUnits: Some descriptions of the enumerated values were provided. In addition, some enumerated values with trailing spaces were included in version 1.0.0. New values have been added without the trailing spaces, and the values with the trailing spaces will be deleted in a future release.

Student.AcademicRecord.Course.CourseOverrideSchool: Once again, a new choice code set of "MutuallyDefined" and a new optional complex data element "LocalOrganizationID" were added.

Student.AcademicRecord.AcademicSummary.AcademicSummaryType: Three new enumerated values were added (Weighted, NonWeighted, and Cumulative).

Student.AcademicRecord.AcademicSummary.GPA: Two new optional data elements were added (GPARangeMinimum and GPARangeMaximum). In addition, some enumerated values with trailing spaces were included in "CreditUnit" in version 1.0.0. New values have been added without the trailing spaces, and the values with the trailing spaces will be deleted in a future release.

Appendix B of Country Codes: These two lists were updated from the latest available list from ISO.

Changes Made in Version 1.1.1.A

The only change made in this version of the Implementation Guide was to correct a format for Birthday on page 38. It corrected an error in the documentation (Implementation Guide) to show that the format for Birthday is –MM-DD.

Changes Made in Version 1.2.0

Accreditation Information: An optional complex data element was added as child to the complex data element "Organization" to allow for a sending school to provide information about its accreditation. Although it appears in all iterations of "Organization", it is only intended to be used when "Organization" appears in the complex data element "Source" when it is child to "TransmissionData".

Organization ID Group: Two new optional code sets were added to this group of code sets. PSS was added to provide a code set for private secondary schools and PSIS was added to provide the latest set of codes for postsecondary schools in Canada.

FaxPhone: A new complex data element "FaxPhone" was added as a child to "Contacts".

Effective and Expiration Dates for Contacts: These two new optional data elements were added to the address, phone and fax phone complex data elements.

Name: A new optional data element "NameCode" was added as child to "Name". It has enumerated values such as Nickname and Legal Name. In addition, new enumerated values (VI through X) were added to Name Suffix.

AcademicAwardLevel: Two new enumerated values were added (FrenchBaccalaureate and CEGEP).

AcademicAwardPrograms: A new code set was added for secondary schools.

AcademicHonors: This complex data element was made repeatable in those cases where it had previously been not repeatable.

Birth: Several new child data elements were added to the complex data element "Birth". They will probably not be used the College Transcript.

School: In at least one case, "SchoolName" was changed to Required, and the OrganizationIDGroup was made Optional.

Academic Degree Requirement: A new simple data element was added as child to allow for the inclusion of the URL address where a dissertation or thesis can be located on the Internet.

Academic Summary: Several new optional child data elements (EntryDate, ExitReasonCode, HighSchoolCreditSummary, ClassRankSessionCount, and ClassRankDate, ClassRankYear and ClassRankYearMonth) were added. These will probably never be used for the College Transcript.

UserDefinedExtensions: This optional complex data element which is really a mini schema was added to several places in the schema.

AttendanceCount: This optional complex data element was added to the "AcademicSession" complex data element to be used for the High School Transcript. It will probably never appear on a College Transcript.

Tests and Subtests: The code sets of Tests and Subtests in the previous versions of the schema were copied directly from the old EDI code sets created in the early 1990's. In this version, we made it optional to use the old EDI code sets or the new sets of codes created for the Education Test Reporting Schema. The older set of codes tied the subtest codes directly to the test code. The new set of codes provide all the subtest codes needed, but does not tie them directly to the code for the test.