Attachment B

Renewable Operating Permit

Michigan Department of Environmental Quality
Air Quality Division

EFFECTIVE DATE: February 2, 2009

ISSUED TO

Central Sanitary Landfill

State Registration Number (SRN): N2804

LOCATED AT

21545 Cannonsville Road, Pierson, Michigan 49339

RENEWABLE OPERATING PERMIT

Permit Number: MI-ROP-N2804-2009

Expiration Date: February 2, 2014

Administratively Complete ROP Renewal Application
Due Between August 3, 2012 and August 4, 2013

This Renewable Operating Permit (ROP) is issued in accordance with and subject to Section 5506(3) of Part 55, Air Pollution Control, of the Natural Resources and Environmental Protection Act, 1994 PA 451, as amended (Act 451). Pursuant to Michigan Air Pollution Control Rule 210(1), this ROP constitutes the permittee's authority to operate the stationary source identified above in accordance with the general conditions, special conditions and attachments contained herein. Operation of the stationary source and all emission units listed in the permit are subject to all applicable future or amended rules and regulations pursuant to Act 451 and the federal Clean Air Act.

SOURCE-WIDE PERMIT TO INSTALL

Permit Number: MI-PTI-N2804-2009

This Permit to Install (PTI) is issued in accordance with and subject to Section 5505(5) of Act 451. Pursuant to Michigan Air Pollution Control Rule 214a, the terms and conditions herein, identified by the underlying applicable requirement citation of Rule 201(1)(a), constitute a federally enforceable PTI. The PTI terms and conditions do not expire and remain in effect unless the criteria of Rule 201(6) are met. Operation of all emission units identified in the PTI is subject to all applicable future or amended rules and regulations pursuant to Act 451 and the federal Clean Air Act.

Michigan Department of Environmental Quality

_____

Heidi G. Hollenbach, Grand Rapids District Supervisor

TABLE OF CONTENTS

AUTHORITY AND ENFORCEABILITY 3

A. GENERAL CONDITIONS 4

Permit Enforceability 4
General Provisions 4
Equipment & Design 5
Emission Limits 5
Testing/Sampling 5
Monitoring/Recordkeeping 6
Certification & Reporting 6
Permit Shield 7
Revisions 8
Reopenings 8
Renewals 9
Stratospheric Ozone Protection 9
Risk Management Plan 9
Emission Trading 9
Permit To Install (PTI) 10

B. SOURCE-WIDE CONDITIONS 11

C. EMISSION UNIT CONDITIONS 12

EMISSION UNIT SUMMARY TABLE 12
EULANDFILL<50 13
EUOPENFLARE 19
EUASBESTOS 21
EUAIRSTRIPPER 25

D. FLEXIBLE GROUP CONDITIONS 27

FLEXIBLE GROUP SUMMARY TABLE 27
FGCOLDCLEANERS 28

E. NON-APPLICABLE REQUIREMENTS 31

APPENDICES 32

Appendix 1. Abbreviations and Acronyms 32
Appendix 2. Schedule of Compliance 33
Appendix 3. Monitoring Requirements 33
Appendix 4. Recordkeeping 33
Appendix 5. Testing Procedures 35
Appendix 6. Permits to Install 36
Appendix 7. Emission Calculations 36
Appendix 8. Reporting 39

AUTHORITY AND ENFORCEABILITY

For the purpose of this permit, the **permittee** is defined as any person who owns or operates an emission unit at a stationary source for which this permit has been issued. The **department** is defined in Rule 104(d) as the Director of the Michigan Department of Environmental Quality (MDEQ) or his or her designee.

The permittee shall comply with all specific details in the permit terms and conditions and the cited underlying applicable requirements. All terms and conditions in this ROP are both federally enforceable and state enforceable unless otherwise footnoted. Certain terms and conditions are applicable to most stationary sources for which an ROP has been issued. These general conditions are included in Part A of this ROP. Other terms and conditions may apply to a specific emission unit, several emission units which are represented as a flexible group, or the entire stationary source which is represented as a Source-Wide group. Special conditions are identified in Parts B, C, D and/or the appendices.

In accordance with Rule 213(2)(a), all underlying applicable requirements will be identified for each ROP term or condition. All terms and conditions that are included in a PTI, are streamlined or subsumed, or is state only enforceable will be noted as such.

In accordance with Section 5507 of Act 451, the permittee has included in the ROP application a compliance certification, a schedule of compliance, and a compliance plan. For applicable requirements with which the source is in compliance, the source will continue to comply with these requirements. For applicable requirements with which the source is not in compliance, the source will comply with the detailed schedule of compliance requirements that are incorporated as an appendix in this ROP. Furthermore, for any applicable requirements effective after the date of issuance of this ROP, the stationary source will meet the requirements on a timely basis, unless the underlying applicable requirement requires a more detailed schedule of compliance.

Issuance of this permit does not obviate the necessity of obtaining such permits or approvals from other units of government as required by law.

A. GENERAL CONDITIONS

Permit Enforceability

- All conditions in this permit are both federally enforceable and state enforceable unless otherwise noted. **(R 336.1213(5))**

- Those conditions that are hereby incorporated in a state only enforceable Source-Wide PTI pursuant to Rule 201(2)(d) are designated by footnote one. **(R 336.1213(5)(a), R336.1214a(5))**

- Those conditions that are hereby incorporated in federally enforceable Source- wide PTI No. MI-PTI-N2804-2009 pursuant to Rule 201(2)(c) are designated by footnote two. **(R 336.1213(5)(b), R 336.1214a(3))**

General Provisions

1. The permittee shall comply with all conditions of this ROP. Any ROP noncompliance constitutes a violation of Act 451, and is grounds for enforcement action, for ROP revocation or revision, or for denial of the renewal of the ROP. All terms and conditions of this ROP that are designated as federally enforceable are enforceable by the Administrator of the United States Environmental Protection Agency (USEPA) and by citizens under the provisions of the federal Clean Air Act (CAA). Any terms and conditions based on applicable requirements which are designated as "state only" are not enforceable by the USEPA or citizens pursuant to the CAA. **(R 336.1213(1)(a))**

2. It shall not be a defense for the permittee in an enforcement action that it would have been necessary to halt or reduce the permitted activity in order to maintain compliance with the conditions of this ROP. **(R 336.1213(1)(b))**

3. This ROP may be modified, revised, or revoked for cause. The filing of a request by the permittee for a permit modification, revision, or termination, or a notification of planned changes or anticipated noncompliance does not stay any ROP term or condition. This does not supersede or affect the ability of the permittee to make changes, at the permittee's own risk, pursuant to Rule 215 and Rule 216. **(R 336.1213(1)(c))**

4. The permittee shall allow the department, or an authorized representative of the department, upon presentation of credentials and other documents as may be required by law and upon stating the authority for and purpose of the investigation, to perform any of the following activities **(R 336.1213(1)(d))**:
   a. Enter, at reasonable times, a stationary source or other premises where emissions-related activity is conducted or where records must be kept under the conditions of the ROP.
   b. Have access to and copy, at reasonable times, any records that must be kept under the conditions of the ROP.
   c. Inspect, at reasonable times, any of the following:
      i. Any stationary source.
      ii. Any emission unit.
      iii. Any equipment, including monitoring and air pollution control equipment.
      iv. Any work practices or operations regulated or required under the ROP.
   d. As authorized by Section 5526 of Act 451, sample or monitor at reasonable times substances or parameters for the purpose of assuring compliance with the ROP or applicable requirements.

5. The permittee shall furnish to the department, within a reasonable time, any information the department may request, in writing, to determine whether cause exists for modifying, revising, or revoking the ROP or to determine compliance with this ROP. Upon request, the permittee shall also furnish to the department copies of any records that are required to be kept as a term or condition of this ROP. For information which is claimed by the permittee to be confidential, consistent with the requirements of the 1976 PA 442, MCL §15.231 et seq.,

and known as the Freedom of Information Act, the person may also be required to furnish the records directly to the USEPA together with a claim of confidentiality. **(R 336.1213(1)(e))**

6. A challenge by any person, the Administrator of the USEPA, or the department to a particular condition or a part of this ROP shall not set aside, delay, stay, or in any way affect the applicability or enforceability of any other condition or part of this ROP. **(R 336.1213(1)(f))**

7. The permittee shall pay fees consistent with the fee schedule and requirements pursuant to Section 5522 of Act 451. **(R 336.1213(1)(g))**

8. This ROP does not convey any property rights or any exclusive privilege. **(R 336.1213(1)(h))**

Equipment & Design

9. Any collected air contaminants shall be removed as necessary to maintain the equipment at the required operating efficiency. The collection and disposal of air contaminants shall be performed in a manner so as to minimize the introduction of contaminants to the outer air. Transport of collected air contaminants in Priority I and II areas requires the use of material handling methods specified in Rule 370(2). **(R 336.1370)**

10. Any air cleaning device shall be installed, maintained, and operated in a satisfactory manner and in accordance with the Michigan Air Pollution Control rules and existing law. **(R 336.1910)**

Emission Limits

11. Except as provided in Subrules 2, 3, and 4 of Rule 301, states in part; "a person shall not cause or permit to be discharged into the outer air from a process or process equipment a visible emission of a density greater than the most stringent of Rule 301(1)(a) or (b) unless otherwise specified in this ROP." The grading of visible emissions shall be determined in accordance with Rule 303. **(R 336.1301(1) in pertinent part)**:
    a. A 6-minute average of 20 percent opacity, except for one 6-minute average per hour of not more than 27 percent opacity.
    b. A limit specified by an applicable federal new source performance standard.

12. The permittee shall not cause or permit the emission of an air contaminant or water vapor in quantities that cause, alone or in reaction with other air contaminants, either of the following:
    a. Injurious effects to human health or safety, animal life, plant life of significant economic value, or property.[1] **(R 336.1901(a))**
    b. Unreasonable interference with the comfortable enjoyment of life and property.[1] **(R 336.1901(b))**

Testing/Sampling

13. The department may require the owner or operator of any source of an air contaminant to conduct acceptable performance tests, at the owner's or operator's expense, in accordance with Rule 1001 and Rule 1003, under any of the conditions listed in Rule 1001(1). **(R 336.2001)**

14. Any required performance testing shall be conducted in accordance with Rule 1001(2), Rule 1001(3) and Rule 1003. **(R 336.2001(2), R 336.2001(3), R 336.2003(1))**

15. Any required test results shall be submitted to the Air Quality Division (AQD) in the format prescribed by the applicable reference test method within 60 days following the last date of the test. **(R 336.2001(4))**

Monitoring/Recordkeeping

16. Records of any periodic emission or parametric monitoring required in this ROP shall include the following information specified in Rule 213(3)(b)(i), where appropriate **(R 336.1213(3)(b))**:
    a. The date, location, time, and method of sampling or measurements.
    b. The dates the analyses of the samples were performed.
    c. The company or entity that performed the analyses of the samples.
    d. The analytical techniques or methods used.
    e. The results of the analyses.
    f. The related process operating conditions or parameters that existed at the time of sampling or measurement.

17. All required monitoring data, support information and all reports, including reports of all instances of deviation from permit requirements, shall be kept and furnished to the department upon request for a period of not less than 5 years from the date of the monitoring sample, measurement, report or application. Support information includes all calibration and maintenance records and all original strip-chart recordings, or other original data records, for continuous monitoring instrumentation and copies of all reports required by the ROP. **(R 336.1213(1)(e), R 336.1213(3)(b)(ii))**

Certification & Reporting

18. Except for the alternate certification schedule provided in Rule 213(3)(c)(iii)(B), any document required to be submitted to the department as a term or condition of this ROP shall contain an original certification by a responsible official which states that, based on information and belief formed after reasonable inquiry, the statements and information in the document are true, accurate, and complete. **(R 336.1213(3)(c))**

19. A responsible official shall certify to the appropriate AQD District Office and to the USEPA that the stationary source is and has been in compliance with all terms and conditions contained in the ROP except for deviations that have been or are being reported to the appropriate AQD District Office pursuant to Rule 213(3)(c). This certification shall include all the information specified in Rule 213(4)(c)(i) through (v) and shall state that, based on information and belief formed after reasonable inquiry, the statements and information in the certification are true, accurate, and complete. The USEPA address is: USEPA, Air Compliance Data - Michigan, Air and Radiation Division, 77 West Jackson Boulevard, Chicago, Illinois 60604. **(R 336.1213(4)(c))**

20. The certification of compliance shall be submitted annually for the term of this ROP as detailed in the special conditions, or more frequently if specified in an applicable requirement or in this ROP. **(R 336.1213(4)(c))**

21. The permittee shall promptly report any deviations from ROP requirements and certify the reports. The prompt reporting of deviations from ROP requirements is defined in Rule 213(3)(c)(ii) as follows, unless otherwise described in this ROP. **(R 336.1213(3)(c))**
    a. For deviations that exceed the emissions allowed under the ROP, prompt reporting means reporting consistent with the requirements of Rule 912 as detailed in Condition 25. All reports submitted pursuant to this paragraph shall be promptly certified as specified in Rule 213(3)(c)(iii).
    b. For deviations which exceed the emissions allowed under the ROP and which are not reported pursuant to Rule 912 due to the duration of the deviation, prompt reporting means the reporting of all deviations in the semiannual reports required by Rule 213(3)(c)(i). The report shall describe reasons for each deviation and the actions taken to minimize or correct each deviation.
    c. For deviations that do not exceed the emissions allowed under the ROP, prompt reporting means the reporting of all deviations in the semiannual reports required by Rule 213(3)(c)(i). The report shall describe the reasons for each deviation and the actions taken to minimize or correct each deviation.

22. For reports required pursuant to Rule 213(3)(c)(ii), prompt certification of the reports is described in Rule 213(3)(c)(iii) as either of the following **(R 336.1213(3)(c))**:
    a. Submitting a certification by a responsible official with each report which states that, based on information and belief formed after reasonable inquiry, the statements and information in the report are true, accurate, and complete.
    b. Submitting, within 30 days following the end of a calendar month during which one or more prompt reports of deviations from the emissions allowed under the ROP were submitted to the department pursuant to Rule 213(3)(c)(ii), a certification by a responsible official which states that, "based on information and belief formed after reasonable inquiry, the statements and information contained in each of the reports submitted during the previous month were true, accurate, and complete". The certification shall include a listing of the reports that are being certified. Any report submitted pursuant to Rule 213(3)(c)(ii) that will be certified on a monthly basis pursuant to this paragraph shall include a statement that certification of the report will be provided within 30 days following the end of the calendar month.

23. Semiannually for the term of the ROP as detailed in the special conditions, or more frequently if specified, the permittee shall submit certified reports of any required monitoring to the appropriate AQD District Office. All instances of deviations from ROP requirements during the reporting period shall be clearly identified in the reports. **(R 336.1213(3)(c)(i))**

24. On an annual basis, the permittee shall report the actual emissions, or the information necessary to determine the actual emissions, of each regulated air pollutant as defined in Rule 212(6) for each emission unit utilizing the emissions inventory forms provided by the department. **(R 336.1212(6))**

25. The permittee shall provide notice of an abnormal condition, start-up, shutdown, or malfunction that results in emissions of a hazardous or toxic air pollutant which continue for more than one hour in excess of any applicable standard or limitation, or emissions of any air contaminant continuing for more than two hours in excess of an applicable standard or limitation, as required in Rule 912, to the appropriate AQD District Office. The notice shall be provided not later than two business days after the start-up, shutdown, or discovery of the abnormal conditions or malfunction. Notice shall be by any reasonable means, including electronic, telephonic, or oral communication. Written reports, if required under Rule 912, must be submitted to the appropriate AQD District Supervisor within 10 days after the start-up or shutdown occurred, within 10 days after the abnormal conditions or malfunction has been corrected, or within 30 days of discovery of the abnormal conditions or malfunction, whichever is first. The written reports shall include all of the information required in Rule 912(5) and shall be certified by a responsible official in a manner consistent with the CAA. **(R 336.1912)**

Permit Shield

26. Compliance with the conditions of the ROP shall be considered compliance with any applicable requirements as of the date of ROP issuance, if either of the following provisions is satisfied. **(R 336.1213(6)(a)(i), R 336.1213(6)(a)(ii))**
    a. The applicable requirements are included and are specifically identified in the ROP.
    b. The permit includes a determination or concise summary of the determination by the department that other specifically identified requirements are not applicable to the stationary source.

    Any requirements identified in Part E of this ROP have been identified as non-applicable to this ROP and are included in the permit shield.

27. Nothing in this ROP shall alter or affect any of the following:
    a. The provisions of Section 303 of the CAA, emergency orders, including the authority of the USEPA under Section 303 of the CAA. **(R 336.1213(6)(b)(i))**
    b. The liability of the owner or operator of this source for any violation of applicable requirements prior to or at the time of this ROP issuance. **(R 336.1213(6)(b)(ii))**
    c. The applicable requirements of the acid rain program, consistent with Section 408(a) of the CAA. **(R 336.1213(6)(b)(iii))**

d. The ability of the USEPA to obtain information from a source pursuant to Section 114 of the CAA. **(R 336.1213(6)(b)(iv))**

28. The permit shield shall not apply to provisions incorporated into this ROP through procedures for any of the following:
    a. Operational flexibility changes made pursuant to Rule 215. **(R 336.1215(5))**
    b. Administrative Amendments made pursuant to Rule 216(1)(a)(i)-(iv). **(R 336.1216(1)(b)(iii))**
    c. Administrative Amendments made pursuant to Rule 216(1)(a)(v) until the amendment has been approved by the department. **(R 336.1216(1)(c)(iii))**
    d. Minor Permit Modifications made pursuant to Rule 216(2). **(R 336.1216(2)(f))**
    e. State-Only Modifications made pursuant to Rule 216(4) until the changes have been approved by the department. **(R 336.1216(4)(e))**

29. Expiration of this ROP results in the loss of the permit shield. If a timely and administratively complete application for renewal is submitted not more than 18 months, but not less than 6 months, before the expiration date of the ROP, but the department fails to take final action before the end of the ROP term, the existing ROP does not expire until the renewal is issued or denied, and the permit shield shall extend beyond the original ROP term until the department takes final action. **(R 336.1217(1)(c), R 336.1217(1)(a))**

Revisions

30. For changes to any process or process equipment covered by this ROP that do not require a revision of the ROP pursuant to Rule 216, the permittee must comply with Rule 215. **(R 336.1215, R 336.1216)**

31. A change in ownership or operational control of a stationary source covered by this ROP shall be made pursuant to Rule 216(1). **(R 336.1219(2))**

32. For revisions to this ROP, an administratively complete application shall be considered timely if it is received by the department in accordance with the time frames specified in Rule 216. **(R 336.1210(9))**

33. Pursuant to Rule 216(1)(b)(iii), Rule 216(2)(d) and Rule 216(4)(d), after a change has been made, and until the department takes final action, the permittee shall comply with both the applicable requirements governing the change and the ROP terms and conditions proposed in the application for the modification. During this time period, the permittee may choose to not comply with the existing ROP terms and conditions that the application seeks to change. However, if the permittee fails to comply with the ROP terms and conditions proposed in the application during this time period, the terms and conditions in the ROP are enforceable. **(R 336.1216(1)(c)(iii), R 336.1216(2)(d), R 336.1216(4)(d))**

Reopenings

34. A ROP shall be reopened by the department prior to the expiration date and revised by the department under any of the following circumstances:
    a. If additional requirements become applicable to this stationary source with three or more years remaining in the term of the ROP, but not if the effective date of the new applicable requirement is later than the ROP expiration date. **(R 336.1217(2)(a)(i))**
    b. If additional requirements pursuant to Title IV of the CAA become applicable to this stationary source. **(R 336.1217(2)(a)(ii))**
    c. If the department determines that the ROP contains a material mistake, information required by any applicable requirement was omitted, or inaccurate statements were made in establishing emission limits or the terms or conditions of the ROP. **(R 336.1217(2)(a)(iii))**
    d. If the department determines that the ROP must be revised to ensure compliance with the applicable requirements. **(R 336.1217(2)(a)(iv))**

Renewals

35. For renewal of this ROP, an administratively complete application shall be considered timely if it is received by the department not more than 18 months, but not less than 6 months, before the expiration date of the ROP. **(R 336.1210(7))**

Stratospheric Ozone Protection

36. If the permittee is subject to Title 40 of the Code of Federal Regulations (CFR), Part 82 and services, maintains, or repairs appliances except for motor vehicle air conditioners (MVAC), or disposes of appliances containing refrigerant, including MVAC and small appliances, or if the permittee is a refrigerant reclaimer, appliance owner or a manufacturer of appliances or recycling and recovery equipment, the permittee shall comply with all applicable standards for recycling and emissions reduction pursuant to 40 CFR, Part 82, Subpart F.

37. If the permittee is subject to 40 CFR, Part 82, and performs a service on motor (fleet) vehicles when this service involves refrigerant in the MVAC, the permittee is subject to all the applicable requirements as specified in 40 CFR, Part 82, Subpart B, Servicing of Motor Vehicle Air Conditioners. The term “motor vehicle” as used in Subpart B does not include a vehicle in which final assembly of the vehicle has not been completed by the original equipment manufacturer. The term MVAC as used in Subpart B does not include the air-tight sealed refrigeration system used for refrigerated cargo or an air conditioning system on passenger buses using Hydrochlorofluorocarbon-22 refrigerant.

Risk Management Plan

38. If subject to Section 112(r) of the CAA and 40 CFR, Part 68, the permittee shall register and submit to the USEPA the required data related to the risk management plan for reducing the probability of accidental releases of any regulated substances listed pursuant to Section 112(r)(3) of the CAA as amended in 40 CFR, Part 68.130. The list of substances, threshold quantities, and accident prevention regulations promulgated under 40 CFR, Part 68, do not limit in any way the general duty provisions under Section 112(r)(1).

39. If subject to Section 112(r) of the CAA and 40 CFR, Part 68, the permittee shall comply with the requirements of 40 CFR, Part 68, no later than the latest of the following dates as provided in 40 CFR, Part 68.10(a):
    a. June 21, 1999,
    b. Three years after the date on which a regulated substance is first listed under 40 CFR, Part 68.130, or
    c. The date on which a regulated substance is first present above a threshold quantity in a process.

40. If subject to Section 112(r) of the CAA and 40 CFR, Part 68, the permittee shall submit any additional relevant information requested by any regulatory agency necessary to ensure compliance with the requirements of 40 CFR, Part 68.

41. If subject to Section 112(r) of the CAA and 40 CFR, Part 68, the permittee shall annually certify compliance with all applicable requirements of Section 112(r) as detailed in Rule 213(4)(c)). **(40 CFR, Part 68)**

Emission Trading

42. Emission averaging and emission reduction credit trading are allowed pursuant to any applicable interstate or regional emission trading program that has been approved by the Administrator of the USEPA as a part of Michigan’s State Implementation Plan. Such activities must comply with Rule 215 and Rule 216. **(R 336.1213(12))**

Permit To Install (PTI)

43. The process or process equipment included in this permit shall not be reconstructed, relocated, or modified unless a PTI authorizing such action is issued by the department, except to the extent such action is exempt from the PTI requirements by any applicable rule. [2] **(R 336.1201(1))**

44. The department may, after notice and opportunity for a hearing, revoke PTI terms or conditions if evidence indicates the process or process equipment is not performing in accordance with the terms and conditions of the PTI or is violating the department's rules or the CAA. [2] **(R 336.1201(8), Section 5510 of Act 451)**

45. The terms and conditions of a PTI shall apply to any person or legal entity that now or hereafter owns or operates the process or process equipment at the location authorized by the PTI. If a new owner or operator submits a written request to the department pursuant to Rule 219 and the department approves the request, this PTI will be amended to reflect the change of ownership or operational control. The request must include all of the information required by Subrules (1)(a), (b) and (c) of Rule 219. The written request shall be sent to the appropriate AQD District Supervisor, MDEQ. [2] **(R 336.1219)**

46. If the installation, reconstruction, relocation, or modification of the equipment for which PTI terms and conditions have been approved has not commenced within 18 months, or has been interrupted for 18 months, the applicable terms and conditions from that PTI shall become void unless otherwise authorized by the department. Furthermore, the person to whom that PTI was issued, or the designated authorized agent, shall notify the department via the Supervisor, Permit Section, MDEQ, AQD, P. O. Box 30260, Lansing, Michigan 48909, if it is decided not to pursue the installation, reconstruction, relocation, or modification of the equipment allowed by the terms and conditions from that PTI. [2] **(R 336.1201(4))**

Footnotes:
[1]This condition is state only enforceable and was established pursuant to Rule 201(1)(b).
[2]This condition is federally enforceable and was established pursuant to Rule 201(1)(a).

B. SOURCE-WIDE CONDITIONS

Part B outlines the Source-Wide Terms and Conditions that apply to this stationary source. The permittee is subject to these special conditions for the stationary source in addition to the general conditions in Part A and any other terms and conditions contained in this ROP.

The permittee shall comply with all specific details in the special conditions and the underlying applicable requirements cited. If a specific condition type does not apply to this source, NA (not applicable) has been used in the table. If there are no Source-Wide Conditions, this section will be left blank.

C. EMISSION UNIT CONDITIONS

Part C outlines terms and conditions that are specific to individual emission units listed in the Emission Unit Summary Table. The permittee is subject to the special conditions for each emission unit in addition to the General Conditions in Part A and any other terms and conditions contained in this ROP.

The permittee shall comply with all specific details in the special conditions and the underlying applicable requirements cited. If a specific condition type does not apply, NA (not applicable) has been used in the table. If there are no conditions specific to individual emission units, this section will be left blank.

EMISSION UNIT SUMMARY TABLE

The descriptions provided below are for informational purposes and do not constitute enforceable conditions.

Emission Unit ID	Emission Unit Description (Including Process Equipment & Control Device(s))	Installation Date/ Modification Date	Flexible Group ID
EULANDFILL<50	This emission unit is of a landfill which has a design capacity greater than 2.5 million megagrams and 2.5 million cubic meters, but actual emissions based upon an established Tier 2 value in the landfill calculation, are less than 50 megagrams. This landfill also has received a volume expansion (increased the design capacity) permit from the Department of Environmental Quality, since May 30, 1991, and therefore making the landfill subject to NSPS WWW.	Installed in 1977, Modified in August 2000	NA
EUOPENFLARE	Open flare for burning landfill gas. The maximum capacity of the open flare is 4,000 scfm.	10/02/2006	NA
EUASBESTOS	Any active or inactive asbestos disposal site.	1/01/1977	NA
EUAIRSTRIPPER	Air stripper used for groundwater remediation.	8/25/1991	NA
EUCOLDCLEANER	This emission unit consists of one or more small coldcleaners/degreasers which are exempt from the requirements of R 336.1201 and which were installed after July 1, 1979.	1/01/1977	FGCOLDCLEANERS

EULANDFILL<50
EMISSION UNIT CONDITIONS

DESCRIPTION

This emission unit is of a landfill which has a design capacity greater than 2.5 million megagrams and 2.5 million cubic meters, but actual emissions based upon an established Tier 2 value in the landfill calculation, are less than 50 megagrams. This landfill also has received a volume expansion (increased the design capacity) permit from the Department of Environmental Quality, since May 30, 1991, and therefore making the landfill subject to NSPS WWW.

Flexible Group ID: NA

POLLUTION CONTROL EQUIPMENT

No pollution control equipment is required at this time, however, landfill gas from the landfill is controlled by a flare.

I. EMISSION LIMIT(S)

Pollutant	Limit	Time Period/ Operating Scenario	Equipment	Monitoring/ Testing Method	Underlying Applicable Requirements
NA	NA	NA	NA	NA	NA

II. MATERIAL LIMIT(S)

Material	Limit	Time Period/ Operating Scenario	Equipment	Monitoring/ Testing Method	Underlying Applicable Requirements
NA	NA	NA	NA	NA	NA

III. PROCESS/OPERATIONAL RESTRICTION(S)

NA

IV. DESIGN/EQUIPMENT PARAMETER(S)

1. If the calculated NMOC emission rate is equal to or greater than 50 megagrams per year, the permittee shall include the following in the collection and control system design plan prepared by a professional engineer. The collection and control system as described in the plan shall meet the design requirements of 40 CFR 60.752(b)(2)(ii). **(40 CFR 60.752(b)(2))**

    a. The collection and control system design plan shall include any alternatives to the operational standards, test methods, procedures, compliance measures, monitoring, recordkeeping or reporting provisions of §§ 60.753 through 60.758 proposed by the owner or operator. **(40 CFR 60.752(b)(2)(i)(B))**

    b. The collection and control system design plan shall either conform with specifications for active collection systems in § 60.759 or include a demonstration to the Administrator's satisfaction of the sufficiency of the alternative provisions to § 60.759. **(40 CFR 60.752(b)(2)(i)(C))**

c. The permittee shall install a collection and control system that captures the gas generated within the landfill as required by paragraphs (b)(2)(ii)(A) or (B) and (b)(2)(iii) of this section within 30 months after the first annual report in which the emission rate equals or exceeds 50 megagrams per year, unless Tier 2 or Tier 3 sampling demonstrates that the emission rate is less than 50 megagrams per year, as specified in § 60.757(c)(1) or (2). **(40 CFR 60.752(b)(2)(ii))**

d. If the permittee chooses to design an active collection system, the system shall: **(40 CFR 60.752(b)(2)(ii)(A))**

   i. Be designed to handle the maximum expected gas flow rate from the entire area of the landfill that warrants control over the intended use period of the gas control or treatment system equipment (see **Equation 3** or **Equation 4** in **Appendix 7**); **(40 CFR 60.752(b)(2)(ii)(A)(1))**

   ii. Be designed to collect gas from each area, cell, or group of cells in the landfill in which the initial solid waste has been placed for a period of: **(40 CFR 60.752(b)(2)(ii)(A)(2))**

      A. 5 years or more if active; or **(40 CFR 60.752(b)(2)(ii)(A)(2)(i))**

      B. 2 years or more if closed or at final grade. **(40 CFR 60.752(b)(2)(ii)(A)(2)(ii))**

   iii. Be designed to collect gas at a sufficient extraction rate; **(40 CFR 60.752(b)(2)(ii)(A)(3))**

   iv. Be designed to minimize off-site migration of subsurface gas. **(40 CFR 60.752(b)(2)(ii)(A)(4))**

e. If the permittee chooses to design a passive collection system, the system shall: **(40 CFR 60.752(b)(2)(ii)(B))**

   i. Comply with the provisions specified in 40 CFR 60.752(b)(2)(ii)(A)(*1*), (*2*), and (2)(ii)(A)(*4*); **(40 CFR 60.752(b)(2)(ii)(B)(1))**

   ii. Be installed with liners on the bottom and all sides in all areas in which gas is to be collected. The liners shall be installed as required under 40 CFR 258.40. **(40 CFR 60.752(b)(2)(ii)(B)(2))**

f. The collection and control system shall be designed to route all the collected gas to a control system that complies with the requirements in either 40 CFR 60.752(b)(2)(iii) (A), (B) or (C), which are listed below. **(40 CFR 60.752(b)(2)(iii))**

   i. An open flare designed and operated in accordance with § 60.18 except as noted in 40 CFR 60.754(e); **(40 CFR 60.752(b)(2)(iii)(A))**

   ii. A control system designed and operated to reduce NMOC by 98 weight-percent, or, when an enclosed combustion device is used for control, to either reduce NMOC by 98 weight percent or reduce the outlet NMOC concentration to less than 20 parts per million by volume, dry basis as hexane at 3 percent oxygen. The reduction efficiency or parts per million by volume shall be established by an initial performance test to be completed no later than 180 days after the initial startup of the approved control system using the test methods specified in § 60.754(d). **(40 CFR 60.752(b)(2)(iii)(B))**

      A. If a boiler or process heater is used as the control device, the landfill gas stream shall be introduced into the flame zone. **(40 CFR 60.752(b)(2)(iii)(B)(1))**

      B. The control device shall be operated within the parameter ranges established during the initial or most recent performance test. The operating parameters to be monitored are specified in § 60.756; **(40 CFR 60.752(b)(2)(iii)(B)(2))**

   iii. Route the collected gas to a treatment system that processes the collected gas for subsequent sale or use. All emissions from any atmospheric vent from the gas treatment system shall be subject to the requirements of paragraph (b)(2)(iii) (A) or (B) of this section. **(40 CFR 60.752(b)(2)(iii)(C))**

g. The permittee shall design a system of vertical wells, horizontal collectors, or other collection devices, satisfactory to the District Supervisor, capable of controlling and extracting gas from all portions of the landfill sufficient to meet all operational and performance standards. The designed collection system shall be designed to incorporate a sufficient density of gas collectors for compliance with § 60.752(b)(2)(ii)(A)(*2*). **(40 CFR 60.755(a)(2))**

   i. For the purposes of calculating the maximum expected gas generation flow rate from the landfill to determine compliance with § 60.752(b)(2)(ii)(A)(*1*), the permittee shall use **Equation 3 or 4** in **Appendix 7**. **(40 CFR 60.755(a)(1)**

h. If the permittee incorporates a bypass of the control equipment into the design plan, then the permittee shall include: **(40 CFR 60.756(b)(2))**

   i. a device that records flow to or bypass of the control device which measures and records the gas flow at least every 15 minutes; or **(40 CFR 60.756(b)(2)(i), 40 CFR 60.756(c)(2)(i))**

   ii. the bypass shall be designed so that while the bypass is in the closed position, it is secured with a car-seal or a lock-and-key type configuration. **(40 CFR 60.756(b)(2), 40 CFR 60.756(c)(2)(ii))**

i. If the permittee's control system plan incorporates an enclosed combustor into the control system, it shall include a temperature monitoring device equipped with a continuous recorder having a minimum accuracy of +/- 1 percent if the temperature being measured expressed in degrees Celsius or +/-0.5 °C, whichever is greater. A temperature monitoring device is not required for boilers or process heaters with design heat input capacity greater than 44 megawatts. **(40 CFR 60.756(b)(1))**

j. If the permittee's control system plan incorporates an open flare, then it shall be designed with a heat sensing device, such as an ultraviolet beam sensor or thermocouple, at the pilot light or the flame itself to indicate the continuous presence of a flame. **(40 CFR 60.756(c)(1))**

See Appendix 7

V. TESTING/SAMPLING

Records shall be maintained on file for a period of 5 years. **(R 336.1213(3)(b)(ii))**

1. If the permittee elects to perform **Tier 2** or **Tier 3** testing, the permittee shall perform the testing in accordance with **Appendix 5** and use the resulting data in the emission calculations prescribed in **Appendix 7** or the most recent version of USEPA's Landfill Gas Emissions Model (LandGEM). **(40 CFR 60.754(a)(3), 40 CFR 60.754(a)(4), 40 CFR 60.754(a)(2)(ii), 60.754(a)(4)(i))**

2. If the calculated NMOC emission rate is equal to or greater than 50 megagrams per year, and the permittee has installed control equipment subject to 40 CFR 60.752(b)(2)(iii)(A), the permittee shall perform testing to determine the net heating value of the combusted landfill gas. This testing can be found under "Performance Testing" in **Appendix 5**. **(40 CFR 60.754(e))**

3. If the calculated NMOC emission rate is equal to or greater than 50 megagrams per year, and the permittee has installed control equipment subject to 40 CFR 60.752(b)(2)(iii)(B), the permittee shall perform testing to determine compliance with the 98 weight-percent efficiency or the 20 ppmv outlet concentration level emission limits. This testing can be found under "Performance Testing" in **Appendix 5**. **(40 CFR 60.754(d))**

4. If the tested **Tier 2** (see **Appendices 5 & 7**) NMOC mass emission rate is less than 50 megagrams per year, the permittee shall submit a periodic estimate of the emission rate report as provided in § 60.757(b)(1) and retest the site-specific NMOC concentration every 5 years using the methods specified in § 60.754. **(40 CFR 60.754(a)(3)(iii))**

5. The permittee may use other methods to determine the NMOC concentration or a site-specific k (see **Appendix 7**) as an alternative to the methods required in § 60.754(a)(3) and (a)(4) if the method has been approved by the USEPA, Region V. **(40 CFR 60.754(a)(5))**

See Appendices 5 and 7

VI. MONITORING/RECORDKEEPING

Records shall be maintained on file for a period of 5 years. **(R 336.1213(3)(b)(ii))**

1. Except as provided in § 60.752(b)(2)(i)(B), the permittee subject to the provisions of § 60.752(b) shall keep for at least 5 years up-to-date, readily accessible, on-site records of the design capacity report which triggered § 60.752(b), the current amount of solid waste in-place, and the year-by-year waste acceptance rate. Off-site records may be maintained if they are retrievable within 4 hours. Either paper copy or electronic formats are acceptable. **(40 CFR 60.758(a))**

2. The permittee shall calculate the annual NMOC emission rate using either **Equation 1** as provided in § 60.753(a)(1)(i) or the **Equation 2** as provided in § 60.753(a)(1)(ii), which are both in **Appendix 7** or the most recent version of USEPA's Landfill Gas Emissions Model (LandGEM). **(40 CFR 60.754(a)(1))**

3. The permittee shall compare the calculated NMOC (**Equation 1** or **Equation 2**) mass emission rate to the standard of 50 megagrams per year. **(40 CFR 60.754(a)(2))**

4. If the calculated NMOC emission rate is less than 50 megagrams per year, the permittee shall: **(40 CFR 60.752(b)(1))**

   a. Submit an annual emission report to the District Supervisor, except as provided for in § 60.757(b)(1)(ii); and **(40 CFR 60.752(b)(1)(i))**

   b. Recalculate the NMOC emission rate annually, except as provided for in 40 CFR 60.757(b)(1)(ii), using the procedures specified in § 60.754(a)(1) until such time as the calculated NMOC emission rate is equal to or greater than 50 megagrams per year, or the landfill is closed. **(40 CFR 60.752(b)(1)(ii))**

5. If the NMOC emission rate, upon recalculation required in § 60.752(b)(1)(ii), is equal to or greater than 50 megagrams per year, the permittee shall install a collection and control system in compliance with § 60.752(b)(2). **(40 CFR 60.752(b)(1)(ii)(A))**

6. If the landfill is permanently closed, a closure notification shall be submitted to the District Supervisor as provided for in § 60.757(d). **(40 CFR 60.752(b)(1)(ii)(B))**

See Appendix 7

VII. REPORTING

1. Prompt reporting of deviations pursuant to General Conditions 21 and 22 of Part A. **(R 336.1213(3)(c)(ii))**

2. Semiannual reporting of monitoring and deviations pursuant to General Condition 23 of Part A. Report shall be postmarked or received by the appropriate AQD district office by March 15 for reporting period July 1 to December 31 and September 15 for reporting period January 1 to June 30. **(R 336.1213(3)(c)(i))**

3. Annual certification of compliance pursuant to General Conditions 19 and 20 of Part A. Report shall be postmarked or received by the appropriate AQD district office by March 15 for the previous calendar year. **(R 336.1213(4)(c))**

4. The permittee shall submit an annual NMOC emission rate report to the District Supervisor except as provided for in § 60.757(b)(1)(ii) or § 60.757(b)(3). The District Supervisor may request such additional information as may be necessary to verify the reported NMOC emission rate. **(40 CFR 60.757(b))**

   a. The NMOC emission rate report shall contain an annual or 5-year estimate of the NMOC emission rate calculated using the formula and procedures provided in § 60.754(a) or (b), as applicable. **(40 CFR 60.757(b)(1))**

      i. If the estimated NMOC emission rate as reported in the annual report to the District Supervisor is less than 50 megagrams per year in each of the next 5 consecutive years, the permittee may elect to submit an estimate of the NMOC emission rate for the next 5-year period in lieu of the annual report. This estimate shall include the current amount of solid waste-in-place and the estimated waste acceptance rate for each year of the 5 years for which an NMOC emission rate is estimated. All data and calculations upon which this estimate is based shall be provided to the District Supervisor. This estimate shall be revised at least once every 5 years. If the actual waste acceptance rate exceeds the estimated waste acceptance rate in any year reported in the 5-year estimate, a revised 5-year estimate shall be submitted to the District Supervisor. The revised estimate shall cover the 5-year period beginning with the year in which the actual waste acceptance rate exceeded the estimated waste acceptance rate. **(40 CFR 60.757(b)(1)(ii))**

   b. The NMOC emission rate report shall include all the data, calculations, sample reports and measurements used to estimate the annual or 5-year emissions. **(40 CFR 60.757(b)(2))**

5. The permittee shall submit a collection and control system design plan prepared by a professional engineer to the District Supervisor within 1 year of the first report required under § 60.752(b) in which the emission rate equals or exceeds 50 megagrams per year, except as follows: **(40 CFR 60.752(b)(2)(i), 40 CFR 60.757(c))**

   a. If the permittee elects to recalculate the NMOC emission rate after **Tier 2** NMOC sampling and analysis as provided in § 60.754(a)(3) (as in **Appendix 5**) and the resulting rate is less than 50 megagrams per year, annual periodic reporting shall be resumed, using the **Tier 2** determined site-specific NMOC concentration, until the calculated emission rate is equal to or greater than 50 megagrams per year or the landfill is closed. The revised NMOC emission rate report, with the recalculated emission rate based on NMOC sampling and analysis, shall be submitted within 180 days of the first calculated exceedance of 50 megagrams per year. **(40 CFR 60.757(c)(1))**

   b. If the permittee elects to recalculate the NMOC emission rate after determining a site-specific methane generation rate constant (k), as provided in **Tier 3** in § 60.754(a)(4), and the resulting NMOC emission rate is less than 50 Mg/yr, annual periodic reporting shall be resumed. The resulting site-specific methane generation rate constant (k) shall be used in the emission rate calculation until such time as the emissions rate calculation results in an exceedance. The revised NMOC emission rate report based on the provisions of § 60.754(a)(4) and the resulting site-specific methane generation rate constant (k) shall be submitted to the District Supervisor within 1 year of the first calculated emission rate exceeding 50 megagrams per year. **(40 CFR 60.757(c)(2))**

6. If the permittee is seeking to comply with the performance testing required by § 60.752(b)(2)(iii) after the collection and control equipment has been installed in accordance with the collection and control system design plan, the permittee shall include the following information with the initial performance test report required under § 60.8: **(40 CFR 60.757(g))**

   a. A diagram of the collection system showing collection system positioning including all wells, horizontal collectors, surface collectors, or other gas extraction devices, including the locations of any areas excluded from collection and the proposed sites for the future collection system expansion; **(40 CFR 60.757(g)(1))**

b. The data upon which the sufficient density of wells, horizontal collectors, surface collectors, or other gas extraction devices and the gas mover equipment sizing are based; **(40 CFR 60.757(g)(2))**

c. The documentation of the presence of asbestos or nondegradable material for each area from which collection wells have been excluded based on the presence of asbestos or nondegradable material; **(40 CFR 60.757(g)(3))**

d. The sum of the gas generation flow rates for all areas from which collection wells have been excluded based on nonproductivity and the calculations of gas generation flow rate for each excluded area; and **(40 CFR 60.757(g)(4))**

e. The provisions for increasing gas mover equipment capacity with increased gas generation flow rate, if the present gas mover equipment is inadequate to move the maximum flow rate expected over the life of the landfill; and **(40 CFR 60.757(g)(5))**

f. The provisions for the control of off-site migration. **(40 CFR 60.757(g)(6))**

VIII. STACK/VENT RESTRICTION(S)

The exhaust gases from the stacks listed in the table below shall be discharged unobstructed vertically upwards to the ambient air unless otherwise noted:

Stack & Vent ID	Maximum Exhaust Dimensions (inches)	Minimum Height Above Ground (feet)	Underlying Applicable Requirements
NA	NA	NA	NA

IX. OTHER REQUIREMENT(S)

1. If the calculated NMOC emission rate is equal to or greater than 50 megagrams per year, and the permittee has installed the § 60.752 required collection and control system, then the permittee shall operate the collection and control device in accordance with the provisions of §§ 60.753, 60.755 and 60.756. **(40 CFR 60.752(b)(2)(iv))**

Footnotes:
[1]This condition is state-only enforceable and was established pursuant to Rule 201(1)(b).
[2]This condition is federally enforceable and was established pursuant to Rule 201(1)(a).

EUOPENFLARE
EMISSION UNIT CONDITIONS

DESCRIPTION

Open flare for burning landfill gas. The maximum capacity of the open flare is 4,000 scfm.

Flexible Group ID: NA

POLLUTION CONTROL EQUIPMENT

NA

I. EMISSION LIMIT(S)

Pollutant	Limit	Time Period/ Operating Scenario	Equipment	Monitoring/ Testing Method	Underlying Applicable Requirements
NA	NA	NA	NA	NA	NA

II. MATERIAL LIMIT(S)

Material	Limit	Time Period/ Operating Scenario	Equipment	Monitoring/ Testing Method	Underlying Applicable Requirements
NA	NA	NA	NA	NA	NA

III. PROCESS/OPERATIONAL RESTRICTION(S)

1. The permittee shall operate the flare at all times when the collected gas is routed to it. [2] **(R 336.1910)**

2. The flare shall be operated with no visible emissions, as determined by the methods specified in 40 CFR 60.18(f), except for periods not to exceed a total of 5 minutes during any 2 consecutive hours. [2] **(R 336.1910)**

3. The flare shall be operated with a flame present at all times, as determined by the methods specified in 40 CFR 60.18(f). [2] **(R 336.1910)**

4. The permittee shall maintain on file an approvable operation and maintenance plan for EUOPENFLARE. [2] **(R 336.1910)**

IV. DESIGN/EQUIPMENT PARAMETER(S)

NA

V. TESTING/SAMPLING

Records shall be maintained on file for a period of 5 years. **(R 336.1213(3)(b)(ii))**

NA

VI. MONITORING/RECORDKEEPING

Records shall be maintained on file for a period of 5 years. **(R 336.1213(3)(b)(ii))**

1. The permittee shall install, calibrate, maintain, and operate according to the manufacturer's specifications the following equipment a heat sensing device, such as an ultraviolet beam sensor or thermocouple, at the pilot light or the flame itself to indicate the continuous presence of a flame. [2] **(R 336.1910)**

2. The permittee shall maintain records of the continuous presence of a flame, at the pilot light or the flame itself. [2] **(R 336.1910)**

See Appendix 7

VII. REPORTING

1. Prompt reporting of deviations pursuant to General Conditions 21 and 22 of Part A. **(R 336.1213(3)(c)(ii))**

2. Semiannual reporting of monitoring and deviations pursuant to General Condition 23 of Part A. Report shall be postmarked or received by appropriate AQD district office by March 15 for reporting period July 1 to December 31 and September 15 for reporting period January 1 to June 30. **(R 336.1213(3)(c)(i))**

3. Annual certification of compliance pursuant to General Conditions 19 and 20 of Part A. Report shall be postmarked or received by appropriate AQD district office by March 15 for the previous calendar year. **(R 336.1213(4)(c))**

See Appendix 8

VIII. STACK/VENT RESTRICTION(S)

The exhaust gases from the stacks listed in the table below shall be discharged unobstructed vertically upwards to the ambient air unless otherwise noted:

Stack & Vent ID	Maximum Exhaust Dimensions (inches)	Minimum Height Above Ground (feet)	Underlying Applicable Requirements
NA	NA	NA	NA

IX. OTHER REQUIREMENT(S)

NA

Footnotes:
[1]This condition is state-only enforceable and was established pursuant to Rule 201(1)(b).
[2]This condition is federally enforceable and was established pursuant to Rule 201(1)(a).

EUASBESTOS
EMISSION UNIT CONDITIONS

DESCRIPTION:

This landfill is actively accepting or has accepted asbestos waste in the past.

Flexible Group ID: NA

POLLUTION CONTROL EQUIPMENT

NA

I. EMISSION LIMIT(S)

Pollutant	Limit	Time Period/ Operating Scenario	Equipment	Monitoring/ Testing Method	Underlying Applicable Requirements
NA	NA	NA	NA	NA	NA

II. MATERIAL LIMIT(S)

Material	Limit	Time Period/ Operating Scenario	Equipment	Monitoring/ Testing Method	Underlying Applicable Requirements
NA	NA	NA	NA	NA	NA

III. PROCESS/OPERATIONAL RESTRICTION(S)

1. If the landfill accepts asbestos-containing waste materials from a source covered under 40 CFR 61.149, 40 CFR 61.150, or 40 CFR 61.155, the permittee shall meet the following operational requirements: **(40 CFR 61.154)**

   a. Either there must be no visible emissions to the outside air from any active waste disposal site where asbestos-containing waste material has been deposited, or the requirements of 40 CFR 61.154(c) or (d) must be met. **(40 CFR 61.154(a))**

   b. Unless a natural barrier adequately deters access by the general public, either warning signs and fencing must be installed and maintained as follows, or the requirements of 40 CFR 61.154(c)(1) must be met. **(40 CFR 61.154(b))**

      i. Warning signs must be displayed at all entrances and at intervals of 100 m (330 ft) or less along the property line of the site or along the perimeter of the sections of the site where asbestos-containing waste material is deposited. **(40 CFR 61.154(b)(1))** The warning signs must:

         A. Be posted in such a manner and location that a person can easily read the legend **(40 CFR 61.154(b)(1)(i))**

         B. Conform to the requirements of 51 cm by 36 cm (20 inches by 14 inches) upright format signs specified in 29 CFR 1910.145(d)(4) and 40 CFR 61.154(b)(1) **(40 CFR 61.154(b)(1)(ii))**

C. The permittee shall display the legend in the lower panel with letter sizes and styles of a visibility at least equal to those specified in 40 CFR 61.154(b)(1). Spacing between any two lines must be at least equal to the height of the upper of the two lines. **(40 CFR 61.154(b)(1)(iii))**

ii. The perimeter of the disposal site must be fenced in a manner adequate to deter access by the general public. **(40 CFR 61.154(b)(2))**

iii. Upon request and supply of appropriate information, the appropriate AQD District Supervisor will determine whether a fence or a natural barrier adequately deters access by the general public. **(40 CFR 61.154(b)(3))**

c. Rather than meet the no visible emission requirement of 40 CFR 61.154(a), at the end of each operating day, or at least once every 24-hour period while the site is in continuous operation, the asbestos-containing waste material that has been deposited at the site during the operating day or previous 24-hour period shall: **(40 CFR 61.154(c))**

i. Be covered with at least 15 centimeters (6 inches) of compacted non-asbestos-containing material. **(40 CFR 61.154(c)(1))** or

ii. Be covered with a resinous or petroleum-based dust suppression agent that effectively binds dust and controls wind erosion. Such an agent shall be used in the manner and frequency recommended for the particular dust by the dust suppression agent manufacturer to achieve and maintain dust control. Other equally effective dust suppression agents may be used upon prior approval by the appropriate AQD District Supervisor. For purposes of 40 CFR 61.154(c)(2), any used, spent, or other waste oil is not considered a dust suppression agent. **(40 CFR 61.154(c)(2))**

d. Rather than meet the no visible emission requirement of 40 CFR 61.154(a), use an alternative emissions control method that has received prior written approval by the appropriate AQD District Supervisor according to the procedures described in 40 CFR 61.149(c)(2). **(40 CFR 61.154(d))**

IV. DESIGN/EQUIPMENT PARAMETER(S)

1. The placement of gas collection devices determined in paragraph §60.759(a)(1) shall control all gas producing areas, except as provided by §60.759 (a)(3)(i) and (a)(3)(ii). **(40 CFR 60.759(a)(3))**

a. Any segregated area of asbestos or nondegradable material may be excluded from collection if documented as provided under §60.758(d). The documentation shall provide the nature, date of deposition, location and amount of asbestos or nondegradable material deposited in the area, and shall be provided to the AQD upon request. **(40 CFR 60.759(a)(3)(i))**

V. TESTING/SAMPLING

Records shall be maintained on file for a period of 5 years. **(R 336.1213(3)(b)(ii))**

NA

VI. MONITORING/RECORDKEEPING

Records shall be maintained on file for a period of 5 years. **(R 336.1213(3)(b)(ii))**

1. For all asbestos-containing waste material received, the permittee of the active waste disposal site shall:

a. Maintain waste shipment records that include the following information: **(40 CFR 61.154(e)(1))**

i. The name, address, and telephone number of the waste generator. **(40 CFR 61.154(e)(1)(i))**

ii. The name, address, and telephone number of the transporter(s). **(40 CFR 61.154(e)(1)(ii)**

iii. The quantity of the asbestos-containing waste material in cubic meters (cubic yards). **(40 CFR 61.154(e)(1)(iii))**

iv. The presence of improperly enclosed or uncovered waste, or any asbestos-containing waste material not sealed in leak-tight containers. Report in writing to the local, State, or EPA Regional office responsible for administering the asbestos NESHAP program for the waste generator (identified in the waste shipment record), and, if different, the local, State, or EPA Regional office responsible for administering the asbestos NESHAP program for the disposal site, by the following working day, the presence of a significant amount of improperly enclosed or uncovered waste. Submit a copy of the waste shipment record along with the report. **(40 CFR 61.154(e)(1)(iv))**

v. The date of the receipt. **(40 CFR 61.154(e)(1)(v))**

b. As soon as possible and no longer than 30 days after receipt of the waste, send a copy of the signed waste shipment record to the waste generator. **(40 CFR 61.154(e)(2))**

c. Upon discovering a discrepancy between the quantity of waste designated on the waste shipment records and the quantity actually received, attempt to reconcile the discrepancy with the waste generator. If the discrepancy is not resolved within 15 days after receiving the waste, immediately report in writing to the local, State, or EPA Regional office responsible for administering the asbestos NESHAP program for the waste generator (identified in the waste shipment record) **(40 CFR 61.154(e)(3))**

2. The permittee shall maintain, until closure, records of the location, depth and area, and quantity in cubic meters (cubic yards) of asbestos-containing waste material within the disposal site on a map or diagram of the disposal area storage. **(40 CFR 61.154(f))**

3. The permittee shall keep readily accessible documentation of the nature, date of deposition, amount, and location of asbestos-containing or nondegradable waste excluded from collection as provided in §60.759(a)(3)(i) as well as any nonproductive areas excluded from collection as provided in §60.759(a)(3)(ii). **(40 CFR 60.758(d)(2))**

VII. REPORTING

1. Prompt reporting of deviations pursuant to General Conditions 21 and 22 of Part A. **(R 336.1213(3)(c)(ii))**

2. Semiannual reporting of monitoring and deviations pursuant to General Condition 23 of Part A. Report shall be postmarked or received by the appropriate AQD District Office by March 15 for reporting period July 1 to December 31 and September 15 for reporting period January 1 to June 30. **(R 336.1213(3)(c)(i))**

3. Annual certification of compliance pursuant to General Conditions 19 and 20 of Part A. Report shall be postmarked or received by the appropriate the AQD District Office by March 15 for the previous calendar year. **(R 336.1213(4)(c))**

4. The permittee shall submit to the appropriate AQD District Supervisor, upon closure of the facility, a copy of records of asbestos waste disposal locations and quantities. **(40 CFR 61.154(h))**

5. The permittee shall furnish upon request, and make available during normal business hours for inspection by the AQD, all records required by 40 CFR Part 61. **(40 CFR 61.154(i))**

6. Notify the appropriate AQD District Office in writing at least 45 days prior to excavating or otherwise disturbing any asbestos-containing waste material that has been deposited at a waste disposal site and is covered. If the excavation will begin on a date other than the one contained in the original notice, notice of the new start date must be provided to the appropriate AQD District Office at least 10 working days before excavation begins and in no event shall excavation begin earlier than the date specified in the original notification. **(40 CFR 61.154(j))** Include the following information in the notice:
   a. Scheduled starting and completion dates. **(40 CFR 61.154(j)(1))**
   b. Reason for disturbing the waste. **(40 CFR 61.154(j)(2))**

c. Procedures to be used to control emissions during the excavation, storage, transport, and ultimate disposal of the excavated asbestos-containing waste material. If deemed necessary, the AQD or may require changes in the emission control procedures to be used. **(40 CFR 61.154(j)(3))**
d. Location of any temporary storage site and the final disposal site. **(40 CFR 61.154(j)(4))**

See Appendix 8

VIII. STACK/VENT RESTRICTION(S)

The exhaust gases from the stacks listed in the table below shall be discharged unobstructed vertically upwards to the ambient air unless otherwise noted:

Stack & Vent ID	Maximum Exhaust Dimensions (inches)	Minimum Height Above Ground (feet)	Underlying Applicable Requirements
NA	NA	NA	NA

IX. OTHER REQUIREMENT(S)

NA

Footnotes:
[1]This condition is state-only enforceable and was established pursuant to Rule 201(1)(b).
[2]This condition is federally enforceable and was established pursuant to Rule 201(1)(a).

EUAIRSTRIPPER
EMISSION UNIT CONDITIONS

DESCRIPTION

Air stripper used for groundwater remediation.

Flexible Group ID: NA

POLLUTION CONTROL EQUIPMENT

NA

I. EMISSION LIMIT(S)

Pollutant	Limit	Time Period/ Operating Scenario	Equipment	Monitoring/ Testing Method	Underlying Applicable Requirements
NA	NA	NA	NA	NA	NA

II. MATERIAL LIMIT(S)

Material	Limit	Time Period/ Operating Scenario	Equipment	Monitoring/ Testing Method	Underlying Applicable Requirements
NA	NA	NA	NA	NA	NA

III. PROCESS/OPERATIONAL RESTRICTION(S)

NA

IV. DESIGN/EQUIPMENT PARAMETER(S)

NA

V. TESTING/SAMPLING

Records shall be maintained on file for a period of five years. **(R 336.1213(3)(b)(ii))**

NA

VI. MONITORING/RECORDKEEPING

Records shall be maintained on file for a period of five years. **(R 336.1213(3)(b)(ii))**

1. The permittee shall monitor, in a satisfactory manner, the flow rate and the total VOC concentration of the air stripper influent and effluent water streams. This shall be done no less frequently than on a semi-annual basis. Total VOC concentration shall be determined using the standard MDEQ groundwater analytical scans for VOCs. Any request for a change in the sampling frequency shall be submitted to the AQD District Supervisor for review and approval. [1] **(R 336.1225)**

2. The permittee shall record the flow rate and the total VOC concentration of the air stripper influent and effluent water streams. This shall be done no less frequently than on a semi-annual basis. All records, including calculation of VOC emission rates, using Appendix 4 or an approved equivalent method, shall be kept on file for at least five years and made available to the Department upon request. [1] **(R 336.1225)**

See Appendix 4

VII. REPORTING

1. Prompt reporting of deviations pursuant to General Conditions 21 and 22 of Part A. **(R 336.1213(3)(c)(ii))**

2. Semiannual reporting of monitoring and deviations pursuant to General Condition 23 of Part A. The report shall be postmarked or received by the appropriate AQD District Office by March 15 for reporting period July 1 to December 31 and September 15 for reporting period January 1 to June 30. **(R 336.1213(3)(c)(i))**

3. Annual certification of compliance pursuant to General Conditions 19 and 20 of Part A. The report shall be postmarked or received by the appropriate AQD District Office by March 15 for the previous calendar year. **(R 336.1213(4)(c))**

See Appendix 8

VIII. STACK/VENT RESTRICTION(S)

The exhaust gases from the stacks listed in the table below shall be discharged unobstructed vertically upwards to the ambient air unless otherwise noted:

Stack & Vent ID	Maximum Exhaust Dimensions (inches)	Minimum Height Above Ground (feet)	Underlying Applicable Requirements
1. SVAIRSTRIPPER	6 [1]	7 [1]	**R 336.1225** **R 336.1901**

IX. OTHER REQUIREMENT(S)

NA

Footnotes:
[1] This condition is state only enforceable and was established pursuant to Rule 201(1)(b).
[2] This condition is federally enforceable and was established pursuant to Rule 201(1)(a).

D. FLEXIBLE GROUP CONDITIONS

Part D outlines the terms and conditions that apply to more than one emission unit. The permittee is subject to the special conditions for each flexible group in addition to the General Conditions in Part A and any other terms and conditions contained in this ROP.

The permittee shall comply with all specific details in the special conditions and the underlying applicable requirements cited. If a specific condition type does not apply, NA (not applicable) has been used in the table. If there are no special conditions that apply to more than one emission unit, this section will be left blank.

FLEXIBLE GROUP SUMMARY TABLE

The descriptions provided below are for informational purposes and do not constitute enforceable conditions.

Flexible Group ID	Flexible Group Description	Associated Emission Unit IDs
FGCOLDCLEANERS	Any cold cleaner that is grandfathered or exempt from Rule 201 pursuant to Rule 278 and Rule 281(h) or Rule 285(r)(iv). Existing cold cleaners were placed into operation prior to July 1, 1979. New cold cleaners were placed into operation on or after July 1, 1979.	EUCOLDCLEANER

FGCOLDCLEANERS
FLEXIBLE GROUP CONDITIONS

DESCRIPTION

Any cold cleaner that is grandfathered or exempt from Rule 201 pursuant to Rule 278 and Rule 281(h) or Rule 285(r)(iv). Existing cold cleaners were placed into operation prior to July 1, 1979. New cold cleaners were placed into operation on or after July 1, 1979.

Emission Unit: EUCOLDCLEANER

I. EMISSION LIMIT(S)

NA

II. MATERIAL LIMIT(S)

1. The permittee shall not use cleaning solvents containing more than five percent by weight of the following halogenated compounds: methylene chloride, perchloroethylene, trichloroethylene, 1,1,1-trichloroethane, carbon tetrachloride, chloroform, or any combination thereof. **(R 336.1213(2))**

III. PROCESS/OPERATIONAL RESTRICTION(S)

1. Cleaned parts shall be drained for no less than 15 seconds or until dripping ceases. **(R 336.1611(2)(b), R 336.1707(3)(b))**

2. The permittee shall perform routine maintenance on each cold cleaner as recommended by the manufacturer. **(R 336.1213(3))**

IV. DESIGN/EQUIPMENT PARAMETER(S)

1. The cold cleaner must meet one of the following design requirements:

   a. The air/vapor interface of the cold cleaner is no more than ten square feet. **(R 336.1281(h))**

   b. The cold cleaner is used for cleaning metal parts and the emissions are released to the general in-plant environment. **(R 336.1285(r)(iv))**

2. The cold cleaner shall be equipped with a device for draining cleaned parts. **(R 336.1611(2)(b), R 336.1707(3)(b))**

3. All new and existing cold cleaners shall be equipped with a cover and the cover shall be closed whenever parts are not being handled in the cold cleaner. **(R 336.1611(2)(a), R 336.1707(3)(a))**

4. The cover of a new cold cleaner shall be mechanically assisted if the Reid vapor pressure of the solvent is more than 0.3 psia or if the solvent is agitated or heated. **(R 336.1707(3)(a))**

5. If the Reid vapor pressure of any solvent used in a new cold cleaner is greater than 0.6 psia; or, if any solvent used in a new cold cleaner is heated above 120 degrees Fahrenheit, then the cold cleaner must comply with at least one of the following provisions:

   a. The cold cleaner must be designed such that the ratio of the freeboard height to the width of the cleaner is equal to or greater than 0.7. **(R 336.1707(2)(a))**

b. The solvent bath must be covered with water if the solvent is insoluble and has a specific gravity of more than 1.0. **(R 336.1707(2)(b))**

c. The cold cleaner must be controlled by a carbon adsorption system, condensation system, or other method of equivalent control approved by the AQD. **(R 336.1707(2)(c))**

V. TESTING/SAMPLING

NA

VI. MONITORING/RECORDKEEPING

Records shall be maintained on file for a period of five years. **(R 336.1213(3)(b)(ii))**

1. For each new cold cleaner in which the solvent is heated, the solvent temperature shall be monitored and recorded at least once each calendar week during routine operating conditions. **(R 336.1213(3))**

2. The permittee shall maintain the following information on file for each cold cleaner: **(R 336.1213(3))**

   a. A serial number, model number, or other unique identifier for each cold cleaner.

   b. The date the unit was installed, manufactured or that it commenced operation.

   c. The air/vapor interface area for any unit claimed to be exempt under Rule 281(h).

   d. The applicable Rule 201 exemption.

   e. The Reid vapor pressure of each solvent used.

   f. If applicable, the option chosen to comply with Rule 707(2).

3. The permittee shall maintain written operating procedures for each cold cleaner. These written procedures shall be posted in an accessible, conspicuous location near each cold cleaner. **(R 336.1611(3), R 336.1707(4))**

4. As noted in Rule 611(2)(c) and Rule 707(3)(c), if applicable, an initial demonstration that the waste solvent is a safety hazard shall be made prior to storage in non-closed containers. If the waste solvent is a safety hazard and is stored in non-closed containers, verification that the waste solvent is disposed of so that not more than 20 percent, by weight, is allowed to evaporate into the atmosphere shall be made on a monthly basis. **(R 336.1213(3), R 336.1611(2)(c), R 336.1707(3)(c))**

VII. REPORTING

1. Prompt reporting of deviations pursuant to General Conditions 21 and 22 of Part A. **(R 336.1213(3)(c)(ii))**

2. Semiannual reporting of monitoring and deviations pursuant to General Condition 23 of Part A. The report shall be postmarked or received by the appropriate AQD District Office by March 15 for reporting period July 1 to December 31 and September 15 for reporting period January 1 to June 30. **(R 336.1213(3)(c)(i))**

3. Annual certification of compliance pursuant to General Conditions 19 and 20 of Part A. The report shall be postmarked or received by the appropriate AQD District Office by March 15 for the previous calendar year. **(R 336.1213(4)(c))**

See Appendix 8

VIII. STACK/VENT RESTRICTION(S)

NA

IX. OTHER REQUIREMENT(S)

NA

E. NON-APPLICABLE REQUIREMENTS

At the time of the ROP issuance, the AQD has determined that no non-applicable requirements have been identified for incorporation into the permit shield provision set forth in the General Conditions in Part A pursuant to Rule 213(6)(a)(ii).

APPENDICES

Appendix 1. Abbreviations and Acronyms

The following is an alphabetical listing of abbreviations/acronyms that may be used in this permit.

AQD	Air Quality Division	MM	Million
acfm	Actual cubic feet per minute	MSDS	Material Safety Data Sheet
BACT	Best Available Control Technology	MW	Megawatts
BTU	British Thermal Unit	NA	Not Applicable
°C	Degrees Celsius	NAAQS	National Ambient Air Quality Standards
CAA	Federal Clean Air Act	NESHAP	National Emission Standard for Hazardous Air Pollutants
CAM	Compliance Assurance Monitoring	NMOC	Non-methane Organic Compounds
CEM	Continuous Emission Monitoring	NOx	Oxides of Nitrogen
CFR	Code of Federal Regulations	NSPS	New Source Performance Standards
CO	Carbon Monoxide	NSR	New Source Review
COM	Continuous Opacity Monitoring	PM	Particulate Matter
department	Michigan Department of Environmental Quality	PM-10	Particulate Matter less than 10 microns in diameter
dscf	Dry standard cubic foot	pph	Pound per hour
dscm	Dry standard cubic meter	ppm	Parts per million
EPA	United States Environmental Protection Agency	ppmv	Parts per million by volume
EU	Emission Unit	ppmw	Parts per million by weight
°F	Degrees Fahrenheit	PS	Performance Specification
FG	Flexible Group	PSD	Prevention of Significant Deterioration
GACS	Gallon of Applied Coating Solids	psia	Pounds per square inch absolute
gr	Grains	psig	Pounds per square inch gauge
HAP	Hazardous Air Pollutant	PeTE	Permanent Total Enclosure
Hg	Mercury	PTI	Permit to Install
hr	Hour	RACT	Reasonable Available Control Technology
HP	Horsepower	ROP	Renewable Operating Permit
H_2S	Hydrogen Sulfide	SC	Special Condition
HVLP	High Volume Low Pressure *	scf	Standard cubic feet
ID	Identification (Number)	sec	Seconds
IRSL	Initial Risk Screening Level	SCR	Selective Catalytic Reduction
ITSL	Initial Threshold Screening Level	SO_2	Sulfur Dioxide
LAER	Lowest Achievable Emission Rate	SRN	State Registration Number
lb	Pound	TAC	Toxic Air Contaminant
m	Meter	Temp	Temperature
MACT	Maximum Achievable Control Technology	THC	Total Hydrocarbons
MAERS	Michigan Air Emissions Reporting System	tpy	Tons per year
MAP	Malfunction Abatement Plan	µg	Microgram
MDEQ	Michigan Department of Environmental Quality	VE	Visible Emissions
mg	Milligram	VOC	Volatile Organic Compounds
mm	Millimeter	yr	Year

*For HVLP applicators, the pressure measured at the gun air cap shall not exceed 10 pounds per square inch gauge (psig).

Appendix 2. Schedule of Compliance

The permittee certified in the ROP application that this stationary source is in compliance with all applicable requirements and the permittee shall continue to comply with all terms and conditions of this ROP. A Schedule of Compliance is not required. **(R 336.1213(4)(a), R 336.1119(a)(ii))**

Appendix 3. Monitoring Requirements

Specific monitoring requirement procedures, methods or specifications are detailed in Part A or the appropriate Source-Wide, Emission Unit and/or Flexible Group Special Conditions. Therefore, this appendix is not applicable.

Appendix 4. Recordkeeping

The permittee shall use the following approved formats and procedures for the recordkeeping requirements referenced in EUAIRSTRIPPER. Alternative formats must be approved by the AQD District Supervisor.

A. The permittee shall use the following format or an approved equivalent method to document monthly records as required in EUAIRSTRIPPER. [1]

Groundwater Remediation Emission Calculation and Recordkeeping

Source Name		**Contact Person**	
Location		**County**	
Recordkeeping Period		**Permit Number**	**Pollutant(s)**
Start Date	**End Date**		

	A	**B**	**C**	**D**	**F**	**G**
Date	**Water Flow (gal/minute, averaged on a monthly basis)**	**Concentration (ppm)**			**Control Efficiency (Percent)**	**VOC Emissions (lbs/month)**
		Inlet	**Outlet**	**In - Out**		
EXAMPLE	100	21	10	11	0	396

EQUATIONS TO CALCULATE EMISSIONS:

D = B – C, all units in parts per million (ppm)

$$G\,\frac{\text{lbs}}{\text{month}} = A\,\frac{\text{gal}}{\text{min}\,*} \times 60\,\frac{\text{min}}{\text{hr}} \times 8.34\,\frac{\text{lbs}}{\text{gal}} \times D \times 10^{-6} \times \frac{(100 - F)}{100}\,x\,(no.\,of\ \ hours\,operated\ \ per\ month)$$

* gal/minute, averaged on a monthly basis

Signature:_____ **Date:**_____

Telephone Number:_____

Appendix 5. Testing Procedures

The permittee shall use the following approved procedures, to measure the pollutant emissions for the applicable requirements referenced in EULANDFILL<50.

Tier 2

The permittee shall determine the NMOC concentration using the following sampling procedure. The permittee shall install at least two sample probes per hectare of landfill surface that has retained waste for at least 2 years. If the landfill is larger than 25 hectares in area, only 50 samples are required. The sample probes should be located to avoid known areas of nondegradable solid waste. The permittee shall collect and analyze one sample of landfill gas from each probe to determine the NMOC concentration using Method 25 or 25C of Appendix A of 40 CFR Part 60. Method 18 of Appendix A of 40 CFR Part 60 may be used to analyze the samples collected by the Method 25 or 25C sampling procedure. Taking composite samples from different probes into a single cylinder is allowed; however, equal sample volumes must be taken from each probe. For each composite, the sampling rate, collection times, beginning and ending cylinder vacuums, or alternative volume measurements must be recorded to verify that composite volumes are equal. Composite sample volumes should not be less than one liter unless evidence can be provided to substantiate the accuracy of smaller volumes. Terminate compositing before the cylinder approaches ambient pressure where measurement accuracy diminishes. If using Method 18, the permittee must identify all compounds in the sample and, at a minimum, test for those compounds published in the most recent Compilation of Air Pollutant Emission Factors (AP-42), minus carbon monoxide, hydrogen sulfide, and mercury. At a minimum, the instrument must be calibrated for each of the compounds on the list. Convert the concentration of each Method 18 compound to CNMOC as hexane by multiplying by the ratio of its carbon atoms divided by six. If more than the required number of samples are taken, all samples must be used in the analysis. The permittee must divide the NMOC concentration from Method 25 or 25C of Appendix A of 40 CFR Part 60 by six to convert from CNMOC as carbon to CNMOC as hexane. If the landfill has an active or passive gas removal system in place, Method 25 or 25C samples may be collected from these systems instead of surface probes provided the removal system can be shown to provide sampling as representative as the two sampling probe per hectare requirement. For active collection systems, samples may be collected from the common header pipe before the gas moving or condensate removal equipment. For these systems, a minimum of three samples must be collected from the header pipe. **(40 CFR 62.14354, 40 CFR 60.754(a)(3))**

Tier 3

The site-specific methane generation rate constant shall be determined using the procedures provided in Method 2E of Appendix A of 40 CFR Part 60. The permittee shall estimate the NMOC mass emission rate using **Equation 1** (§ 60.754(a)(1)(i)) or **Equation 2** (§ 60.754(a)(1)(ii)) and using a site-specific methane generation rate constant k, and the site-specific NMOC concentration as determined in § 60.754(a)(3) instead of the default values provided in § 60.754(a)(1). The permittee shall compare the resulting NMOC mass emission rate to the standard of 50 megagrams per year. **(40 CFR 62.14354, 40 CFR 60.754(a)(4))**

Performance test

For the performance test required in §60.752(b)(2)(iii)(A), the net heating value of the combusted landfill gas as determined in §60.18(f)(3) is calculated from the concentration of methane in the landfill gas as measured by Method 3C. A minimum of three 30-minute Method 3C samples are determined. The measurement of other organic components, hydrogen, and carbon monoxide is not applicable. Method 3C may be used to determine the landfill gas molecular weight for calculating the flare gas exit velocity under §60.18(f)(4).

For the performance test required in § 60.752(b)(2)(iii)(B), Method 25, 25C, or Method 18 of Appendix A of 40 CFR Part 60 must be used to determine compliance with the 98 weight-percent efficiency or the 20 ppmv outlet concentration level, unless another method to demonstrate compliance has been approved by the District Supervisor as provided by § 60.752(b)(2)(i)(B). Method 3 or 3A shall be used to determine oxygen for correcting the NMOC concentration as hexane to 3 percent. In cases where the outlet concentration is less than 50 ppm NMOC as carbon (8 ppm NMOC as hexane), Method 25A should be used in place of Method 25. If using Method 18 of Appendix A of 40 CFR Part 60, the minimum list of compounds to be tested shall be those published in the most recent Compilation of Air Pollutant Emission Factors (AP-42). The following equation shall be used to calculate efficiency: **(40 CFR 62.14354, 40 CFR 60.754(d))**

Control Efficiency = (NMOCin − NMOCout)/(NMOCin) where,

NMOCin = mass of NMOC entering control device

NMOCout = mass of NMOC exiting control device

Appendix 6. Permits to Install

The following table lists any PTIs issued since the effective date of previously issued ROP No. 200100007

Permit to Install Number	Description of Equipment	Corresponding Emission Unit(s) or Flexible Group(s)
80-04	Air stripper used for groundwater remediation.	EUAIRSTRIPPER
167-06	Open flare for burning landfill gas. The maximum capacity of the open flare is 4,000 scfm.	EUOPENFLARE

Appendix 7. Emission Calculations

The permittee shall use the following calculations in conjunction with monitoring, testing or recordkeeping data to determine compliance with the applicable requirements referenced in EU-LANDFILL<50.

Default Values

The permittee shall calculate the NMOC emission rate using either **Equation 1** (the equation provided in § 60.754(a)(1)(i)) or **Equation 2** (the equation provided in § 60.754(a)(1)(ii)). Both equations may be used if the actual year-to-year solid waste acceptance rate is known, as specified in **Equation 1** (§ 60.754(a)(1)(i)), for part of the life of the landfill and the actual year-to-year solid waste acceptance rate is unknown, as specified in **Equation 2** (§ 60.754(a)(1)(ii)), for part of the life of the landfill. The values to be used in both equations are 0.05 per year for k, 170 cubic meters per megagram for L_o, and 4,000 parts per million by volume as hexane for the C_{NMOC}. For landfills located in geographical areas with a thirty year annual average precipitation of less than 25 inches, as measured at the nearest representative official meteorologic site, the k value to be used is 0.02 per year. **(40 CFR 62.14354, 40 CFR 60.754(a)(1))**

Equation 1

The following equation shall be used if the actual year-to-year solid waste acceptance rate is known. **(40 CFR 62.14354, 40 CFR 60.754(a)(1)(i))**

$$M_{NMOC} = \sum_{i=1}^{n} 2\,k\,L_o M_i \left(e^{-kt_i}\right)\left(C_{NMOC}\right)\left(3.6\times10^{-9}\right)$$

Where:

M_{NMOC} = Total NMOC emission rate from the landfill, megagrams per year

k = methane generation rate constant, year−1

L_o = methane generation potential, cubic meters per megagram solid waste

M_i = mass of solid waste in the ith section, megagrams

t_i = age of the ith section, years

C_{NMOC} = concentration of NMOC, parts per million by volume as hexane

3.6×10^{-9} = conversion factor

The mass of nondegradable solid waste may be subtracted from the total mass of solid waste in a particular section of the landfill when calculating the value for Mi if documentation of the nature and amount of such wastes is maintained.

Equation 2

The following equation shall be used if the actual year-to-year solid waste acceptance rate is unknown. **(40 CFR 62.14354, 40 CFR 60.754(a)(1)(ii))**

$$M_{NMOC} = 2L_o\,R\,(e^{-kc} - e^{-kt})\,(C_{NMOC})\,(3.6 \times 10^{-9})$$

Where:

M_{NMOC} = mass emission rate of NMOC, megagrams per year

L_o = methane generation potential, cubic meters per megagram solid waste

R = average annual acceptance rate, megagrams per year

k = methane generation rate constant, $year^{-1}$

t = age of landfill, years

C_{NMOC} = concentration of NMOC, parts per million by volume as hexane

c = time since closure, years; for active landfill c = 0 and $e^{-kc} = 1$

3.6×10^{-9} = conversion factor

The mass of nondegradable solid waste may be subtracted from the total mass of solid waste in a particular section of the landfill when calculating the value of R, if documentation of the nature and amount of such wastes is maintained.

Tier 2

The permittee shall recalculate the NMOC mass emission rate using **Equation 1** or **Equation 2** in **Appendix 7** and using the average NMOC concentration from the collected samples (**Tier 2** testing in **Appendix 5**) instead of the default value in the equation provided in § 60.754(a)(1). **(40 CFR 62.14354, 40 CFR 60.754(a)(3)(i))**

If the resulting mass emission rate calculated using the site-specific NMOC concentration is equal to or greater than 50 megagrams per year, then the permittee shall either comply with § 60.752(b)(2) (submit a collection and control system design plan prepared by a professional engineer within 1 year), or determine the site-specific methane generation rate constant and recalculate the NMOC emission rate using the site-specific methane generation rate using the procedure specified in **Tier 3** (§ 60.752(a)(4)). **(40 CFR 62.14354, 40 CFR 60.754(a)(3)(ii))**

If the resulting **Tier 2** NMOC mass emission rate is less than 50 megagrams per year, the permittee shall submit a periodic estimate of the emission rate report as provided in § 60.757(b)(1) and retest the site-specific NMOC concentration every 5 years using the methods specified in this section. **(40 CFR 62.14354, 40 CFR 60.754(a)(3)(iii))**

Tier 3

If the **Tier 3** NMOC mass emission rate as calculated using the site-specific methane generation rate and concentration of NMOC is equal to or greater than 50 megagrams per year, the permittee shall comply with § 60.752(b)(2) (submit a collection and control system design plan prepared by a professional engineer within 1 year). **(40 CFR 62.14354, 40 CFR 60.754(a)(4)(i))**

If the NMOC mass emission rate is less than 50 megagrams per year, then the permittee shall submit a periodic emission rate report as provided in § 60.757(b)(1) and shall recalculate the NMOC mass emission rate annually, as provided in § 60.757(b)(1) using **Equation 1** or **Equation 2**, and using the site-specific methane generation rate constant (**Tier 3**) and NMOC concentration (**Tier 2**) obtained in § 60.754(a)(3). The calculation of the methane generation rate constant (**Tier 3**) is performed only once, and the value obtained from this test shall be used in all subsequent annual NMOC emission rate calculations. **(40 CFR 62.14354, 40 CFR 60.754(a)(4)(ii))**

Calculating expected gas generation flow rates from the landfill

For the purposes of calculating the maximum expected gas generation flow rate from the landfill to determine compliance with § 60.752(b)(2)(ii)(A)(*1*), either **Equation 3** or **Equation 4**, below, shall be used. The k and L_o kinetic factors should be those published in the most recent Compilation of Air Pollutant Emission Factors (AP-42) or other site specific values demonstrated to be appropriate and approved by the USEPA, Region V. If k has been determined as specified in § 60.754(a)(4), the value of k determined from the test shall be used. A value of no more than 15 years shall be used for the intended use period of the gas mover equipment. The active life of the landfill is the age of the landfill plus the estimated number of years until closure. **(40 CFR 60.755(a)(1))**

If a collection and control system has been installed, actual flow data may be used to project the maximum expected gas generation flow rate instead of, or in conjunction with, **Equation 3** or **Equation 4**. If the landfill is still accepting waste, the actual measured flow data will not equal the maximum expected gas generation rate, so calculations using **Equation 3** or **Equation 4** or other methods shall be used to predict the maximum expected gas generation rate over the intended period of use of the gas control system equipment. **(40 CFR 62.14354, 40 CFR 60.755(a)(1)(ii))**

Equation 3

For sites with unknown year-to-year solid waste acceptance rate:

$$Q_m = 2L_o R (e^{-kc} - e^{-kt})$$

Where:

Q_m = maximum expected gas generation flow rate, cubic meters per year

L_o = methane generation potential, cubic meters per megagram solid waste

R = average annual acceptance rate, megagrams per year

k = methane generation rate constant, $year^{-1}$

t = age of the landfill at equipment installation plus the time the owner or operator intends to use the gas mover equipment or active life of the landfill, whichever is less. If the equipment is installed after closure, t is the age of the landfill at installation, years

c = time since closure, years (for an active landfill c = 0 and $e^{-kc} = 1$)

Equation 4

For sites with known year-to-year solid waste acceptance rate:

$$Q_M = \sum_{i=1}^{n} 2\,k\,L_o\,M_i\left(e^{-kt_i}\right)$$

Where,

Q_M = maximum expected gas generation flow rate, cubic meters per year

k = methane generation rate constant, $year^{-1}$

L_o = methane generation potential, cubic meters per megagram solid waste

M_i = mass of solid waste in the ith section, megagrams

t_i = age of the ith section, years

Appendix 8. Reporting

A. Annual, Semiannual, and Deviation Certification Reporting

The permittee shall use the MDEQ Report Certification form (EQP 5736) and MDEQ Deviation Report form (EQP 5737) for the annual, semiannual and deviation certification reporting referenced in the Reporting Section of the Source-Wide, Emission Unit and/or Flexible Group Special Conditions. Alternative formats must meet the provisions of Rule 213(4)(c) and Rule 213(3)(c)(i), respectively, and be approved by the AQD District Supervisor.

B. Other Reporting

Specific reporting requirement formats and procedures are detailed in Part A or the appropriate Source-Wide, Emission Unit and/or Flexible Group Special Conditions. Therefore, Part B of this appendix is not applicable.

Attachment C

Electric Well Pumps

25S Easy Selection Chart

25 GPM

SELECTION CHARTS

(Ratings are in GALLONS PER HOUR-GPH)

FLOW RANGE

(18 TO 32 GPM)

PUMP OUTLET
1 1/2" NPT

			DEPTH TO PUMPING WATER LEVEL (LIFT) IN FEET																								
PUMP MODEL	**HP**	**PSI**	**20**	**40**	**60**	**80**	**100**	**120**	**140**	**160**	**180**	**200**	**220**	**240**	**260**	**280**	**300**	**340**	**400**	**460**	**520**	**600**	**700**	**800**	**900**	**1000**	**1100**
25S05-3	**1/2**	20	1115	390	195																						
		30	630																								
		40																									
		50																									
		60																									
SHUT-OFF PSI:			31	22	13	5																					
25S07-5	**3/4**	0			2070	1785	1435	1085																			
		20	1975	1715	1310	905	450																				
		30	1625	1350	735	120																					
		40	1170	705	350																						
		50	605																								
		60	245																								
SHUT-OFF PSI:			57	48	39	31	22	13																			
25S10-7	**1**	0					1880	1710	1460	1210	760	305															
		20		1990	1820	1655	1375	1100	625	150	80																
		30	1980	1795	1590	1385	780	575	290																		
		40	1765	1595	1280	970	490																				
		50	1520	1290	855	420	210																				
		60	1180	835	420																						
SHUT-OFF PSI:			83	74	65	57	48	39	31	22	13	5															
25S15-9	**1 1/2**	0						1930	1800	1675	1485	1295	975	650													
		20				1890	1760	1630	1420	1215	870	530	265														
		30			1875	1745	1585	1420	1135	850	470	90															
		40		1850	1715	1580	1355	1125	770	410	205																
		50	1835	1705	1530	1350	1045	735	370																		
		60	1670	1530	1280	1030	660	290	145																		
SHUT-OFF PSI:			109	100	91	83	74	65	57	48	39	31	22	13													
25S20-11	**2**	0						1985	1865	1760	1655	1505	1350	1110	870	560											
		20					1950	1835	1725	1620	1455	1290	1035	780	465	150											
		30				1920	1820	1720	1585	1450	1235	1015	720	420	210												
		40			1910	1805	1690	1580	1400	1225	955	685	375														
		50		1890	1785	1685	1540	1395	1165	935	625	320	160														
		60	1880	1775	1655	1535	1345	1155	870	590	295																
SHUT-OFF PSI:			135	126	118	109	100	92	83	74	66	57	48	40	31	23											
25S30-15	**3**	0										1935	1860	1785	1705	1625	1510	1240									
		20								1910	1835	1760	1680	1595	1475	1360	1190	810									
		30						1980	1900	1825	1750	1670	1570	1470	1325	1180	985	560									
		40					1970	1890	1815	1740	1650	1560	1440	1315	1140	965	745	295									
		50				1955	1880	1800	1720	1645	1540	1430	1280	1125	920	720	490	130									
		60			1945	1865	1790	1715	1620	1530	1400	1270	1085	900	680	455	230										
SHUT-OFF PSI:					170	161	152	144	135	126	118	109	100	92	83	74	66	48									
25S50-26	**5**	0																1950	1815	1680	1515	1195	610				
		20															1935	1845	1715	1555	1350	950	300				
		30														1925	1880	1795	1660	1480	1250	810	150				
		40													1920	1875	1830	1745	1600	1400	1135	660					
		50											1960	1910	1870	1825	1780	1690	1530	1305	1010	510					
		60										1950	1905	1860	1815	1775	1730	1635	1455	1200	875	350					
SHUT-OFF PSI:												253	245	236	227	219	210	193	167	141	115	80	37				

See 25S performance curves for higher head models.
SPECIFICATIONS SUBJECT TO CHANGE WITHOUT NOTICE.

GRUNDFOS®

Company name:	-
Created by:	-
Phone:	-
Fax:	-
Date:	-

05010009 25S15-9 60 Hz

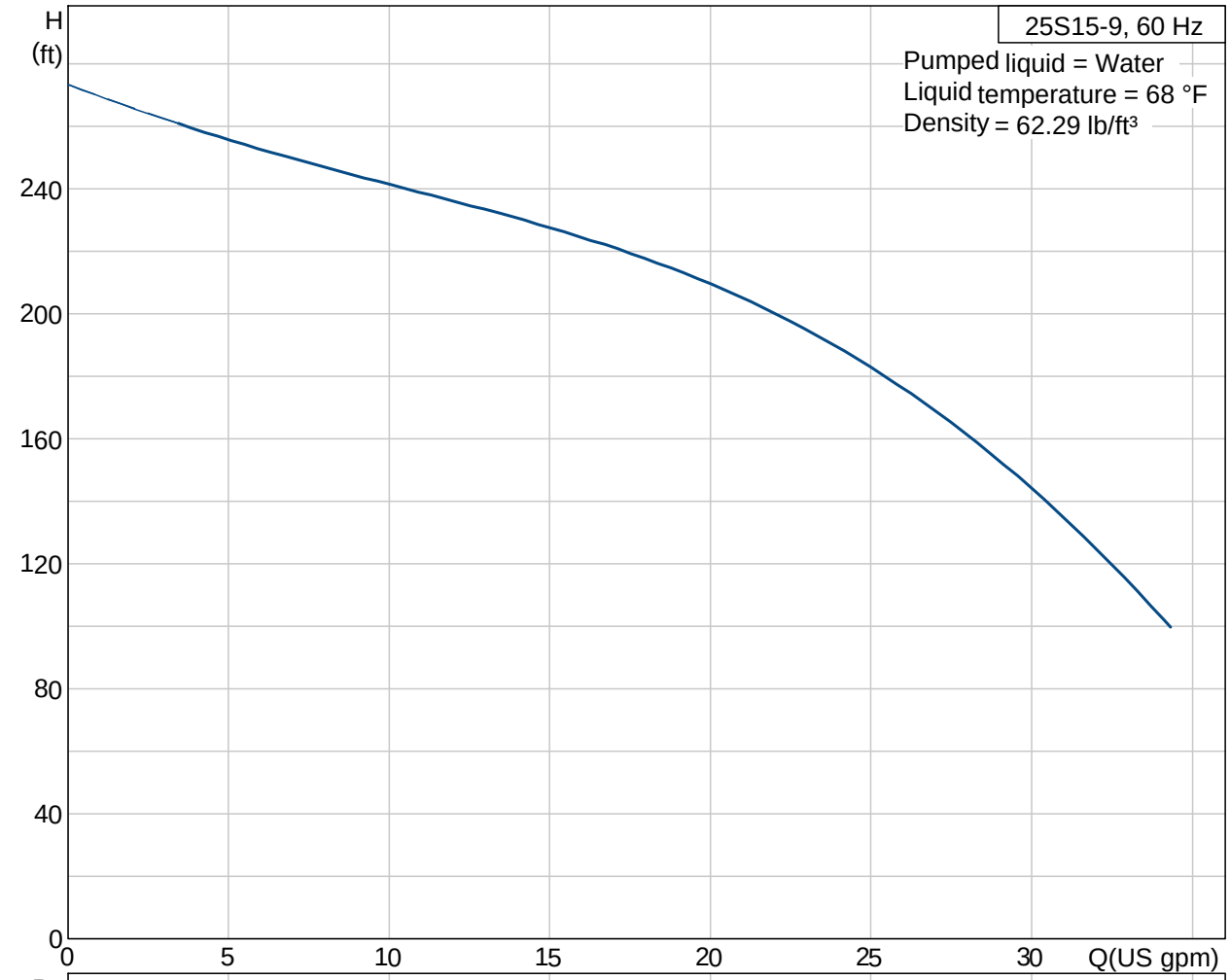

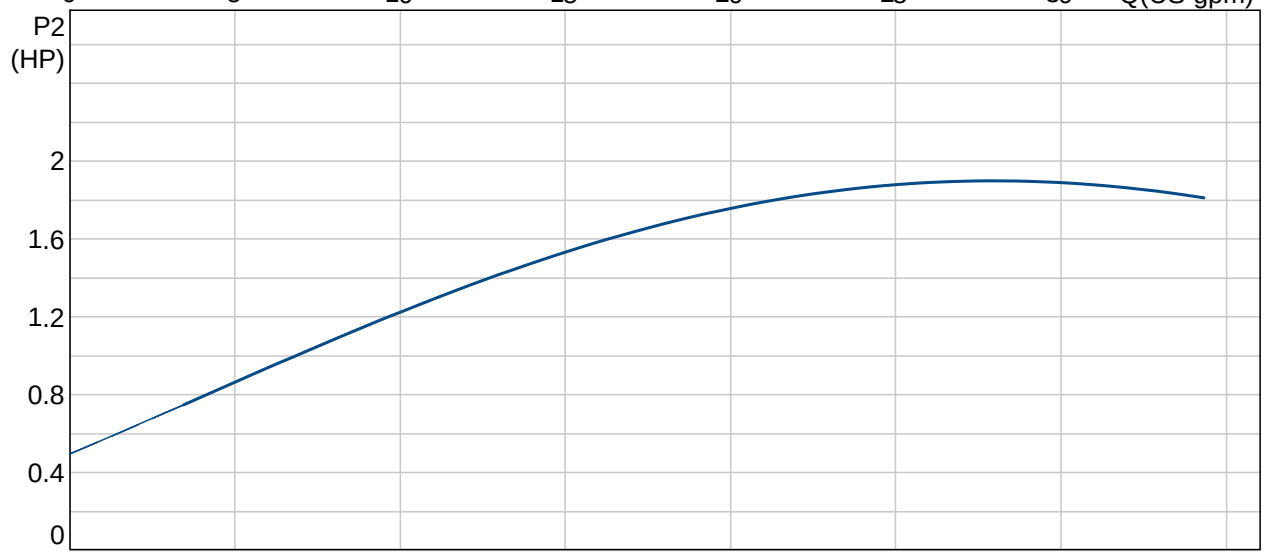

Company name:	-
Created by:	-
Phone:	-
Fax:	-
Date:	-

Position	*Count*	*Description*	*Unit price*
	1	**25S15-9**	On request

Product photo could vary from the actual product

Product No.: 05010009
Multi-stage submersible pump for raw water supply, groundwater lowering and pressure boosting. The pump is suitable for pumping clean, thin, non-agressive liquids without solid particles or fibers.

The pump is made entirely of Stainless steel DIN W.-Nr. DIN W.-Nr. 1.4301and suitable for horizontal and vertical installation.
The pump is fitted with a built-in non-return valve.

Liquid:

Maximum liquid temperature:	104 °F
Liquid temp:	68 °F
Density:	998.2 kg/m³

Technical:

Speed for pump data:	3450 rpm
Rated flow:	26.4 US gpm
Rated head:	180 ft

Materials:

Pump:	Stainless steel DIN W.-Nr. 1.4301 AISI 304
Impeller:	Stainless steel DIN W.-Nr. 1.4301 AISI 304

Installation:

Pump outlet:	1 1/2" NPT
Motor diameter:	4 inch

Electrical data:

Power (P2) required by pump:	1.93 HP
Main frequency:	60 Hz
Start. method:	DOL

FRANKLIN ELECTRIC

2011 AIM MANUAL

SUBMERSIBLE MOTORS

Application • Installation • Maintenance

60 Hz, Single-Phase and Three-Phase Motors

System Solutions

Franklin Electric

Storage

Franklin Electric submersible motors are a water-lubricated design. The fill solution consists of a mixture of deionized water and Propylene Glycol (a non-toxic antifreeze). The solution will prevent damage from freezing in temperatures to -40 °F (-40 °C); motors should be stored in areas that do not go below this temperature. The solution will partially freeze below 27 °F (-3 °C), but no damage occurs. Repeated freezing and thawing should be avoided to prevent possible loss of fill solution.

There may be an interchange of fill solution with well water during operation. Care must be taken with motors removed from wells during freezing conditions to prevent damage.

When the storage temperature does not exceed 100 °F (37 °C), storage time should be limited to two years. Where temperatures reach 100° to 130 °F, storage time should be limited to one year.

Loss of a few drops of liquid will not damage the motor as an excess amount is provided, and the filter check valve will allow lost liquid to be replaced by filtered well water upon installation. If there is reason to believe there has been a considerable amount of leakage, consult the factory for checking procedures.

Frequency of Starts

The average number of starts per day over a period of months or years influences the life of a submersible pumping system. Excessive cycling affects the life of control components such as pressure switches, starters, relays and capacitors. Rapid cycling can also cause motor spline damage, bearing damage, and motor overheating. All these conditions can lead to reduced motor life.

The pump size, tank size and other controls should be selected to keep the starts per day as low as practical for longest life. The maximum number of starts per 24-hour period is shown in table 3.

Motors should run a minimum of one minute to dissipate heat build up from starting current. Six inch and larger motors should have a minimum of 15 minutes between starts or starting attempts.

Table 3 Number of Starts

MOTOR RATING		MAXIMUM STARTS PER 24 HR PERIOD	
HP	KW	SINGLE-PHASE	THREE-PHASE
Up to 0.75	Up to 0.55	300	300
1 thru 5.5	0.75 thru 4	100	300
7.5 thru 30	5.5 thru 22	50	100*
40 and over	30 and over	-	100

* Keeping starts per day within the recommended numbers provides the best system life. However, when used with a properly configured Reduced Voltage Starter (RVS) or Variable Frequency Drive (VFD), 7.5 thru 30 hp three-phase motors can be started up to 200 times per 24 hour period.

Mounting Position

Franklin submersible motors are designed primarily for operation in the vertical, shaft-up position.

During acceleration, the pump thrust increases as its output head increases. In cases where the pump head stays below its normal operating range during startup and full speed condition, the pump may create upward thrust. This creates upward thrust on the motor upthrust bearing. This is an acceptable operation for short periods at each start, but running continuously with upthrust will cause excessive wear on the upthrust bearing.

With certain additional restrictions as listed in this section and the Inline Booster Pump Systems sections of this manual, motors are also suitable for operation in positions from shaft-up to shaft-horizontal. As the mounting position becomes further from vertical and closer to horizontal, the probability of shortened thrust bearing life increases. For normal motor life expectancy with motor positions other than shaft-up, follow these recommendations:

1. Minimize the frequency of starts, preferably to fewer than **10** per 24-hour period. Six and eight inch motors should have a minimum of 20 minutes between starts or starting attempts
2. Do not use in systems which can run even for short periods at full speed without thrust toward the motor.

Transformer Capacity - Single-Phase or Three-Phase

Distribution transformers must be adequately sized to satisfy the kVA requirements of the submersible motor. When transformers are too small to supply the load, there is a reduction in voltage to the motor.

Table 4 references the motor horsepower rating, single-phase and three-phase, total effective kVA required, and the smallest transformer required for open or closed three-phase systems. Open systems require larger transformers since only two transformers are used.

Other loads would add directly to the kVA sizing requirements of the transformer bank.

Table 4 Transformer Capacity

MOTOR RATING		TOTAL EFFECTIVE KVA REQUIRED	SMALLEST KVA RATING-EACH TRANSFORMER	
HP	KW		OPEN WYE OR DELTA 2- TRANSFORMERS	CLOSED WYE OR DELTA 3- TRANSFORMERS
1.5	1.1	3	2	1
2	1.5	4	2	1.5
3	2.2	5	3	2
5	3.7	7.5	5	3
7.5	5.5	10	7.5	5
10	7.5	15	10	5
15	11	20	15	7.5
20	15	25	15	10
25	18.5	30	20	10
30	22	40	25	15
40	30	50	30	20
50	37	60	35	20
60	45	75	40	25
75	55	90	50	30
100	75	120	65	40
125	93	150	85	50
150	110	175	100	60
175	130	200	115	70
200	150	230	130	75

NOTE: Standard kVA ratings are shown. If power company experience and practice allows transformer loading higher than standard, higher loading values may be used to meet total effective kVA required, provided correct voltage and balance is maintained.

Effects of Torque

During starting of a submersible pump, the torque developed by the motor must be supported through the pump, delivery pipe or other supports. Most pumps rotate in the direction which causes unscrewing torque on right-handed threaded pipe or pump stages. All threaded joints, pumps and other parts of the pump support system must be capable of withstanding the maximum torque repeatedly without loosening or breaking. Unscrewing joints will break electrical cable and may cause loss of the pump-motor unit.

To safely withstand maximum unscrewing torques with a minimum safety factor of 1.5, tightening all threaded joints to at least 10 lb-ft per motor horsepower is recommended (table 4A). It may be necessary to tack or strap weld pipe joints on high horsepower pumps, especially at shallower settings.

Table 4A Torque Required (Examples)

MOTOR RATING		MINIMUM SAFE TORQUE-LOAD
HP	KW	
1 hp & Less	0.75 kW & Less	10 lb-ft
20 hp	15 kW	200 lb-ft
75 hp	55 kW	750 lb-ft
200 hp	150 kW	2000 lb-ft

Use of Engine Driven Generators - Single-Phase or Three-Phase

Table 5 lists minimum generator sizes based on typical 80 °C rise continuous duty generators, with 35% maximum voltage dip during starting, for Franklin's three-wire motors, single- or three-phase.

This is a general chart. The generator manufacturer should be consulted whenever possible, especially on larger sizes.

There are two types of generators available: externally and internally regulated. Most are externally regulated. They use an external voltage regulator that senses the output voltage. As the voltage dips at motor start-up, the regulator increases the output voltage of the generator.

Internally regulated (self-excited) generators have an extra winding in the generator stator. The extra winding senses the output current to automatically adjust the output voltage.

Generators must be sized to deliver at least 65% of the rated voltage during starting to ensure adequate starting torque. Besides sizing, generator frequency is important as the motor speed varies with the frequency (Hz). Due to pump affinity laws, a pump running at 1 to 2 Hz below motor nameplate frequency design will not meet its performance curve. Conversely, a pump running at 1 to 2 Hz above may trip overloads.

Generator Operation

Always start the generator before the motor is started and always stop the motor before the generator is shut down. The motor thrust bearing may be damaged if the generator is allowed to coast down with the motor running. This same condition occurs when the generator is allowed to run out of fuel.

Follow generator manufacturer's recommendations for de-rating at higher elevations or using natural gas.

Table 5 Engine Driven Generators

NOTE: This chart applies to 3-wire or 3-phase motors. For best starting of 2-wire motors, the minimum generator rating is 50% higher than shown.

MOTOR RATING		MINIMUM RATING OF GENERATOR			
		EXTERNALLY REGULATED		INTERNALLY REGULATED	
HP	KW	KW	KVA	KW	KVA
1/3	0.25	1.5	1.9	1.2	1.5
1/2	0.37	2	2.5	1.5	1.9
3/4	0.55	3	3.8	2	2.5
1	0.75	4	5.0	2.5	3.13
1.5	1.1	5	6.25	3	3.8
2	1.5	7.5	9.4	4	5
3	2.2	10	12.5	5	6.25
5	3.7	15	18.75	7.5	9.4
7.5	5.5	20	25.0	10	12.5
10	7.5	30	37.5	15	18.75
15	11	40	50	20	25
20	15	60	75	25	31
25	18.5	75	94	30	37.50
30	22	100	125	40	50
40	30	100	125	50	62.5
50	37	150	188	60	75
60	45	175	220	75	94
75	55	250	313	100	125
100	75	300	375	150	188
125	93	375	469	175	219
150	110	450	563	200	250
175	130	525	656	250	313
200	150	600	750	275	344

WARNING: To prevent accidental electrocution, automatic or manual transfer switches must be used any time a generator is used as standby or back up on power lines. Contact power company for use and approval.

Use of Check Valves

It is recommended that one or more check valves always be used in submersible pump installations. If the pump does not have a built-in check valve, a line check valve should be installed in the discharge line within 25 feet of the pump and below the draw down level of the water supply. For deeper settings, check valves should be installed per the manufacturer's recommendations. More than one check valve may be required, but more than the recommended number of check valves should not be used.

Swing type check valves are **not** acceptable and should never be used with submersible motors/pumps. Swing type check valves have a slower reaction time which can cause water hammer (see next page). Internal pump check valves or spring loaded check valves close quickly and help eliminate water hammer.

Check valves are used to hold pressure in the system when the pump stops. They also prevent backspin, water hammer and upthrust. Any of these can lead to early pump or motor failure.

NOTE: Only positive sealing check valves should be used in submersible installations. Although drilling the check valves or using drain-back check valves may prevent back spinning, they create upthrust and water hammer problems.

A. Backspin - With no check valve or a failed check valve, the water in the drop pipe and the water in the system can flow down the discharge pipe when the motor stops. This can cause the pump to rotate in a reverse direction. If the motor is started while it is backspinning, an excessive force is placed across the pump-motor assembly that can cause impeller damage, motor or pump shaft breakage, excessive bearing wear, etc.

B. Upthrust - With no check valve, a leaking check valve, or drilled check valve, the unit starts under

a zero head condition. This causes an uplifting or upthrust on the impeller-shaft assembly in the pump. This upward movement carries across the pump-motor coupling and creates an upthrust condition in the motor. Repeated upthrust can cause premature failure of both the pump and the motor.

C. **Water Hammer -** If the lowest check valve is more than 30 feet above the standing (lowest static) water level, or a lower check valve leaks and the check valve above holds, a vacuum is created in the discharge piping. On the next pump start, water moving at very high velocity fills the void and strikes the closed check valve and the stationary water in the pipe above it, causing a hydraulic shock. This shock can split pipes, break joints and damage the pump and/or motor. Water hammer can often be heard or felt. When discovered, the system should be shut down and the pump installer contacted to correct the problem.

Wells – Large Diameter, Uncased, Top Feeding and Screened Sections

Franklin Electric submersible motors are designed to operate with a cooling flow of water over and around the full length of the motor.

If the pump installation does not provide the minimum flow shown in table 6, a flow inducer sleeve (flow sleeve) must be used. The conditions requiring a flow sleeve are:

- Well diameter is too large to meet table 6 flow requirements.
- Pump is in an open body of water.
- Pump is in a rock well or below the well casing.
- The well is “top-feeding” (a.k.a. cascading)
- Pump is set in or below screens or perforations.

Water Temperature and Flow

Franklin Electric’s standard submersible motors, except Hi-Temp designs (see note below), are designed to operate up to maximum service factor horsepower in water up to 86 °F (30 °C). A flow of 0.25 ft/s for 4" motors rated 3 hp and higher, and 0.5 ft/s for 6" and 8" motors is required for proper cooling. Table 6 shows minimum flow rates, in gpm, for various well diameters and motor sizes.

If a standard motor is operated in water over 86 °F (30 °C), water flow past the motor must be increased to maintain safe motor operating temperatures. See HOT WATER APPLICATIONS on page 7.

NOTE: Franklin Electric offers a line of Hi-Temp motors designed to operate in water at higher temperatures or lower flow conditions. Consult factory for details.

Table 6 Required Cooling Flow

MINIMUM GPM REQUIRED FOR MOTOR COOLING IN WATER UP TO 86 °F (30 °C).			
CASING OR SLEEVE ID INCHES (MM)	4" MOTOR (3-10 HP) 0.25 FT/S GPM (L/M)	6" MOTOR 0.50 FT/S GPM (L/M)	8" MOTOR 0.50 FT/S GPM (L/M)
4 (102)	1.2 (4.5)	-	-
5 (127)	7 (26.5)	-	-
6 (152)	13 (49)	9 (34)	-
7 (178)	20 (76)	25 (95)	-
8 (203)	30 (114)	45 (170)	10 (40)
10 (254)	50 (189)	90 (340)	55 (210)
12 (305)	80 (303)	140 (530)	110 (420)
14 (356)	110 (416)	200 (760)	170 (645)
16 (406)	150 (568)	280 (1060)	245 (930)

0.25 ft/s = 7.62 cm/sec 0.50 ft/s = 15.24 cm/sec
1 inch = 2.54 cm

Flow Inducer Sleeve

If the flow rate is less than specified, then a flow inducer sleeve must be used. A flow sleeve is always required in an open body of water. FIG. 1 shows a typical flow inducer sleeve construction.

EXAMPLE: A 6" motor and pump that delivers 60 gpm will be installed in a 10" well.

From table 6, 90 gpm would be required to maintain proper cooling. In this case adding an 8" or smaller flow sleeve provides the required cooling.

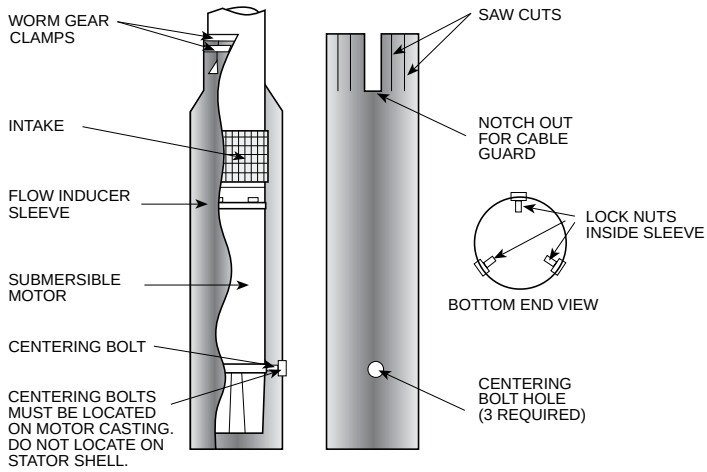

FIG. 1

Head Loss From Flow Past Motor

Table 7 lists the approximate head loss due to flow between an average length motor and smooth casing or flow inducer sleeve.

Table 7 Head Loss in Feet (Meters) at Various Flow Rates

MOTOR DIAMETER		4"	4"	4"	6"	6"	6"	8"	8"
CASING ID IN INCHES (MM)		4 (102)	5 (127)	6 (152)	6 (152)	7 (178)	8 (203)	8.1 (206)	10 (254)
Flow Rate in gpm (l/m)	25 (95)	0.3 (.09)							
	50 (189)	1.2 (.37)							
	100 (378)	4.7 (1.4)	0.3 (.09)		1.7 (.52)				
	150 (568)	10.2 (3.1)	0.6 (.18)	0.2 (.06)	3.7 (1.1)				
	200 (757)		1.1 (.34)	0.4 (.12)	6.3 (1.9)	0.5 (.15)		6.8 (2.1)	
	250 (946)		1.8 (.55)	0.7 (.21)	9.6 (2.9)	0.8 (.24)		10.4 (3.2)	
	300 (1136)		2.5 (.75)	1.0 (.30)	13.6 (4.1)	1.2 (.37)	0.2 (.06)	14.6 (4.5)	
	400 (1514)				23.7 (7.2)	2.0 (.61)	0.4 (.12)	24.6 (7.5)	
	500 (1893)					3.1 (.94)	0.7 (.21)	37.3 (11.4)	0.6 (0.2)
	600 (2271)					4.4 (1.3)	1.0 (.30)	52.2 (15.9)	0.8 (0.3)
	800 (3028)								1.5 (0.5)
	1000 (3785)								2.4 (0.7)

Hot Water Applications (Standard Motors)

Franklin Electric offers a line of Hi-Temp motors which are designed to operate in water with various temperatures up to 194 °F (90 °C) without increased flow. When a standard pump-motor operates in water hotter than 86 °F (30 °C), a flow rate of at least 3 ft/s is required. When selecting the motor to drive a pump in over 86 °F (30 °C) water, the motor horsepower must be de-rated per the following procedure.

1. Using table 7A, determine pump gpm required for different well or sleeve diameters. If necessary, add a flow sleeve to obtain at least 3 ft/s flow rate.

Table 7A Minimum gpm (l/m) Required for 3 ft/s (.91 m/sec) Flow Rate

CASING OR SLEEVE ID		4" HIGH THRUST MOTOR		6" MOTOR		8" MOTOR	
INCHES	(MM)	GPM	(L/M)	GPM	(L/M)	GPM	(L/M)
4	(102)	15	(57)				
5	(127)	80	(303)				
6	(152)	160	(606)	52	(197)		
7	(178)			150	(568)		
8	(203)			260	(984)	60	(227)
10	(254)			520	(1970)	330	(1250)
12	(305)					650	(2460)
14	(356)					1020	(3860)
16	(406)					1460	(5530)

Continued on next page

2. Determine pump horsepower required from the pump manufacturer's curve.

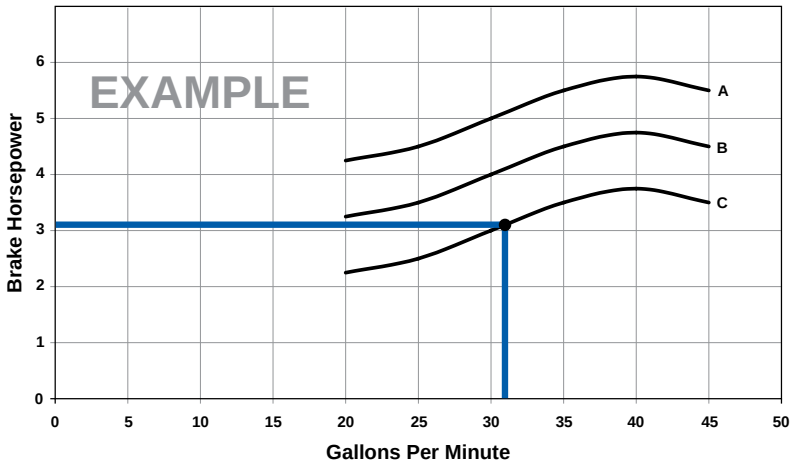

FIG. 2 MANUFACTURER'S PUMP CURVE

3. Multiply the pump horsepower required by the heat factor multiplier from table 8.

Table 8 Heat Factor Multiplier at 3 ft/s (.91 m/sec) Flow Rate

MAXIMUM WATER TEMPERATURE	1/3 - 5 HP .25 - 3.7 KW	7 1/2 - 30 HP 5.5 - 22 KW	OVER 30 HP OVER 22 KW
140 °F (60 °C)	1.25	1.62	2.00
131 °F (55 °C)	1.11	1.32	1.62
122 °F (50 °C)	1.00	1.14	1.32
113 °F (45 °C)	1.00	1.00	1.14
104 °F (40 °C)	1.00	1.00	1.00
95 °F (35 °C)	1.00	1.00	1.00

4. Select a rated hp motor on table 8A whose Service Factor Horsepower is at least the value calculated in Item 3.

Table 8A Service Factor Horsepower

HP	KW	SFHP	HP	KW	SFHP	HP	KW	SFHP	HP	KW	SFHP
1/3	0.25	0.58	3	2.2	3.45	25	18.5	28.75	100	75	115.00
1/2	0.37	0.80	5	3.7	5.75	30	22.0	34.50	125	93	143.75
3/4	0.55	1.12	7.5	5.5	8.62	40	30.0	46.00	150	110	172.50
1	0.75	1.40	10	7.5	11.50	50	37.0	57.50	175	130	201.25
1.5	1.10	1.95	15	11.0	17.25	60	45.0	69.00	200	150	230.00
2	1.50	2.50	20	15.0	23.00	75	55.0	86.25			

Hot Water Applications - Example

EXAMPLE: A 6" pump end requiring 39 hp input will pump 124 °F water in an 8" well at a delivery rate of 140 gpm. From table 7A, a 6" flow sleeve will be required to increase the flow rate to at least 3 ft/s.

Using table 8, the 1.62 heat factor multiplier is selected because the hp required is over 30 hp and water temperature is above 122 °F. Multiply 39 hp x 1.62 (multiplier), which equals 63.2 hp. This is the minimum rated service factor horsepower usable at 39 hp in 124 °F. Using table 8A, select a motor with a rated service factor horsepower above 63.2 hp. A 60 hp motor has a service factor horsepower of 69, so a 60 hp motor may be used.

Drawdown Seals

Allowable motor temperature is based on atmospheric pressure or higher surrounding the motor. “Drawdown seals,” which seal the well to the pump above its intake to maximize delivery, are not recommended, since the suction created can be lower than atmospheric pressure.

Grounding Control Boxes and Panels

The National Electrical Code requires that the control box or panel-grounding terminal always be connected to supply ground. If the circuit has no grounding conductor and no metal conduit from the box to supply panel, use a wire at least as large as line conductors and connect as required by the National Electrical Code, from the grounding terminal to the electrical supply ground.

WARNING: Failure to ground the control frame can result in a serious or fatal electrical shock hazard.

Grounding Surge Arrestors

An above ground surge arrestor must be grounded, metal to metal, all the way to the lowest draw down water strata for the surge arrestor to be effective. GROUNDING THE ARRESTOR TO THE SUPPLY GROUND OR TO A DRIVEN GROUND ROD PROVIDES LITTLE OR NO SURGE PROTECTION FOR THE MOTOR.

Control Box, Pumptec Products and Panel Environment

Franklin Electric control boxes, Pumptec products and three-phase panels meet UL requirements for NEMA Type 3R enclosures. They are suitable for indoor and outdoor applications within temperatures of +14 °F (-10 °C) to 122 °F (50 °C). Operating control boxes below +14 °F can cause reduced starting torque and loss of overload protection when overloads are located in control boxes.

Control boxes, Pumptec products and three-phase panels should never be mounted in direct sunlight or high temperature locations. This will cause shortened capacitor life (where applicable) and unnecessary tripping of overload protectors. A ventilated enclosure painted white to reflect heat is recommended for an outdoor, high temperature location.

A damp well pit, or other humid location, accelerates component failure from corrosion.

Control boxes with voltage relays are designed for vertical upright mounting only. Mounting in other positions will affect the operation of the relay.

Equipment Grounding

WARNING: Serious or fatal electrical shock may result from failure to connect the motor, control enclosures, metal plumbing and all other metal near the motor or cable to the power supply ground terminal using wire no smaller than motor cable wires.

The primary purpose of grounding the metal drop pipe and/or metal well casing in an installation is safety. It is done to limit the voltage between nonelectrical (exposed metal) parts of the system and ground, thus minimizing dangerous shock hazards. Using wire at least the size of the motor cable wires provides adequate current-carrying capability for any ground fault that might occur. It also provides a low resistance path to ground, ensuring that the current to ground will be large enough to trip any overcurrent device designed to detect faults (such as a ground fault circuit interrupter, or GFCI).

Normally, the ground wire to the motor would provide the primary path back to the power supply ground for any ground fault. There are conditions, however, where the ground wire connection could become compromised. One such example would be the case where the water in the well is abnormally corrosive or aggressive. In this example, a grounded metal drop pipe or casing would then become the primary path to ground. However, the many installations that now use plastic drop pipes and/or casings require further steps to be taken for safety purposes, so that the water column itself does not become the conductive path to ground.

When an installation has abnormally corrosive water AND the drop pipe or casing is plastic, Franklin Electric recommends the use of a GFCI with a 10 mA set-point. In this case, the motor ground wire should be routed through the current-sensing device along with the motor power leads. Wired this way, the GFCI will trip only when a ground fault has occurred AND the motor ground wire is no longer functional.

Table 17 Three-Phase 60 °C Cable (Continued)

60 °C

MOTOR RATING			60 °C INSULATION - AWG COPPER WIRE SIZE													MCM COPPER WIRE SIZE				
VOLTS	HP	KW	14	12	10	8	6	4	3	2	1	0	00	000	0000	250	300	350	400	500
460 V 60 Hz Three-Phase 3 - Lead	1/2	0.37	3770	6020	9460															
	3/4	0.55	2730	4350	6850															
	1	0.75	2300	3670	5770	9070														
	1.5	1.1	1700	2710	4270	6730														
	2	1.5	1300	2070	3270	5150	8050													
	3	2.2	1000	1600	2520	3970	6200													
	5	3.7	590	950	1500	2360	3700	5750												
	7.5	5.5	420	680	1070	1690	2640	4100	5100	6260	7680									
	10	7.5	310	500	790	1250	1960	3050	3800	4680	5750	7050								
	15	11	0	**340**	540	850	1340	2090	2600	3200	3930	4810	5900	7110						
	20	15	0	0	**410**	650	1030	1610	2000	2470	3040	3730	4580	5530						
	25	18.5	0	0	0	**530**	830	1300	1620	1990	2450	3010	3700	4470	5430					
	30	22	0	0	0	**430**	680	1070	1330	1640	2030	2490	3060	3700	4500	5130	5860			
	40	30	0	0	0	0	**500**	790	980	1210	1490	1830	2250	2710	3290	3730	4250			
	50	37	0	0	0	0	0	**640**	800	980	1210	1480	1810	2190	2650	3010	3420	3830	4180	4850
	60	45	0	0	0	0	0	**540**	**670**	**830**	1020	1250	1540	1850	2240	2540	2890	3240	3540	4100
	75	55	0	0	0	0	0	0	0	**680**	**840**	1030	1260	1520	1850	2100	2400	2700	2950	3440
	100	75	0	0	0	0	0	0	0	0	**620**	**760**	**940**	1130	1380	1560	1790	2010	2190	2550
	125	93	0	0	0	0	0	0	0	0	0	0	**740**	**890**	**1000**	1220	1390	1560	1700	1960
	150	110	0	0	0	0	0	0	0	0	0	0	0	**760**	**920**	**1050**	**1190**	1340	1460	1690
	175	130	0	0	0	0	0	0	0	0	0	0	0	0	**810**	**930**	**1060**	**1190**	1300	1510
	200	150	0	0	0	0	0	0	0	0	0	0	0	0	0	**810**	**920**	**1030**	**1130**	1310
575 V 60 Hz Three-Phase 3 - Lead	1/2	0.37	5900	9410																
	3/4	0.55	4270	6810																
	1	0.75	3630	5800	9120															
	1.5	1.1	2620	4180	6580															
	2	1.5	2030	3250	5110	8060														
	3	2.2	1580	2530	3980	6270														
	5	3.7	920	1480	2330	3680	5750													
	7.5	5.5	660	1060	1680	2650	4150													
	10	7.5	490	780	1240	1950	3060	4770	5940											
	15	11	**330**	530	850	1340	2090	3260	4060											
	20	15	0	**410**	650	1030	1610	2520	3140	3860	4760	5830								
	25	18.5	0	0	**520**	830	1300	2030	2530	3110	3840	4710								
	30	22	0	0	**430**	680	1070	1670	2080	2560	3160	3880	4770	5780	7030	8000				
	40	30	0	0	0	**500**	790	1240	1540	1900	2330	2860	3510	4230	5140	5830				
	50	37	0	0	0	0	**640**	1000	1250	1540	1890	2310	2840	3420	4140	4700	5340	5990	6530	7580
	60	45	0	0	0	0	0	**850**	1060	1300	1600	1960	2400	2890	3500	3970	4520	5070	5530	6410
	75	55	0	0	0	0	0	**690**	**860**	**1060**	1310	1600	1970	2380	2890	3290	3750	5220	4610	5370
	100	75	0	0	0	0	0	0	0	**790**	**970**	**1190**	1460	1770	2150	2440	2790	3140	3430	3990
	125	93	0	0	0	0	0	0	0	0	**770**	**950**	**1160**	1400	1690	1920	2180	2440	2650	3070
	150	110	0	0	0	0	0	0	0	0	0	**800**	**990**	**1190**	1440	1630	1860	2080	2270	2640
	175	130	0	0	0	0	0	0	0	0	0	0	**870**	**1050**	**1270**	**1450**	1650	1860	2030	2360
	200	150	0	0	0	0	0	0	0	0	0	0	0	**920**	**1110**	**1260**	**1440**	1620	1760	2050

Lengths in **BOLD** only meet the US National Electrical Code ampacity requirements for individual conductors in free air or water. Lengths NOT in bold meet NEC ampacity requirements for either individual conductors or jacketed cable. See 11 for additional details.

Continued on next page

Table 22 Three-Phase Motor Specifications (60 Hz) 3450 rpm

TYPE	MOTOR MODEL PREFIX	RATING					FULL LOAD		MAXIMUM LOAD		LINE TO LINE RESISTANCE OHMS	EFFICIENCY %		LOCKED ROTOR AMPS	KVA CODE
		HP	KW	VOLTS	HZ	S.F.	AMPS	WATTS	AMPS	WATTS		S.F.	F.L.		
4"	234501	1/2	0.37	200	60	1.6	2.8	585	3.4	860	6.6-8.4	70	64	17.5	N
	234511			230	60	1.6	2.4	585	2.9	860	9.5-10.9	70	64	15.2	N
	234541			380	60	1.6	1.4	585	2.1	860	23.2-28.6	70	64	9.2	N
	234521			460	60	1.6	1.2	585	1.5	860	38.4-44.1	70	64	7.6	N
	234531			575	60	1.6	1.0	585	1.2	860	58.0-71.0	70	64	6.1	N
	234502	3/4	0.55	200	60	1.5	3.6	810	4.4	1150	4.6-5.9	73	69	24.6	N
	234512			230	60	1.5	3.1	810	3.8	1150	6.8-7.8	73	69	21.4	N
	234542			380	60	1.5	1.9	810	2.5	1150	16.6-20.3	73	69	13	N
	234522			460	60	1.5	1.6	810	1.9	1150	27.2-30.9	73	69	10.7	N
	234532			575	60	1.5	1.3	810	1.6	1150	41.5-50.7	73	69	8.6	N
	234503	1	0.75	200	60	1.4	4.5	1070	5.4	1440	3.8-4.5	72	70	30.9	M
	234513			230	60	1.4	3.9	1070	4.7	1440	4.9-5.6	72	70	26.9	M
	234543			380	60	1.4	2.3	1070	2.8	1440	12.2-14.9	72	70	16.3	M
	234523			460	60	1.4	2	1070	2.4	1440	19.9-23.0	72	70	13.5	M
	234533			575	60	1.4	1.6	1070	1.9	1440	30.1-36.7	72	70	10.8	M
	234504	1.5	1.1	200	60	1.3	5.8	1460	6.8	1890	2.5-3.0	76	76	38.2	K
	234514			230	60	1.3	5	1460	5.9	1890	3.2-4.0	76	76	33.2	K
	234544			380	60	1.3	3	1460	3.6	1890	8.5-10.4	76	76	20.1	K
	234524			460	60	1.3	2.5	1460	3.1	1890	13.0-16.0	76	76	16.6	K
	234534			575	60	1.3	2	1460	2.4	1890	20.3-25.0	76	76	13.3	K
	234305	2	1.5	200	60	1.25	7.7	1960	9.3	2430	1.8-2.4	76	76	50.3	K
	234315			230	60	1.25	6.7	1960	8.1	2430	2.3-3.0	76	76	45.0	K
	234345			380	60	1.25	4.1	1960	4.9	2430	6.6-8.2	76	76	26.6	K
	234325			460	60	1.25	3.4	1960	4.1	2430	9.2-12.0	76	76	22.5	K
	234335			575	60	1.25	2.7	1960	3.2	2430	14.6-18.7	76	76	17.8	K
	234306	3	2.2	200	60	1.15	10.9	2920	12.5	3360	1.3-1.7	77	77	69.5	K
	234316			230	60	1.15	9.5	2920	10.9	3360	1.8-2.2	77	77	60.3	K
	234346			380	60	1.15	5.8	2920	6.6	3360	4.7-6.0	77	77	37.5	K
	234326			460	60	1.15	4.8	2920	5.5	3360	7.2-8.8	77	77	31.0	K
	234336			575	60	1.15	3.8	2920	4.4	3360	11.4-13.9	77	77	25.1	K
	234307	5	3.7	200	60	1.15	18.3	4800	20.5	5500	.68-.83	78	78	116	K
	234317			230	60	1.15	15.9	4800	17.8	5500	.91-1.1	78	78	102	K
	234347			380	60	1.15	9.6	4800	10.8	5500	2.6-3.2	78	78	60.2	K
	234327			460	60	1.15	8.0	4800	8.9	5500	3.6-4.4	78	78	53.7	K
	234337			575	60	1.15	6.4	4800	7.1	5500	5.6-6.9	78	78	41.8	K
	234308	7.5	5.5	200	60	1.15	26.5	7150	30.5	8200	.43-.53	78	78	177	K
	234318			230	60	1.15	23.0	7150	26.4	8200	.60-.73	78	78	152	K
	234348			380	60	1.15	13.9	7150	16.0	8200	1.6-2.0	78	78	92.7	K
	234328			460	60	1.15	11.5	7150	13.2	8200	2.3-2.8	78	78	83.8	K
	234338			575	60	1.15	9.2	7150	10.6	8200	3.6-4.5	78	78	64.6	K
	234549	10	7.5	380	60	1.15	19.3	10000	21.0	11400	1.2-1.6	75	75	140	L
	234595			460	60	1.15	15.9	10000	17.3	11400	1.8-2.3	75	75	116.0	L
	234598			575	60	1.15	12.5	10000	13.6	11400	2.8-3.5	75	75	92.8	L

Table 23 Three-Phase Motor Fuse Sizing

TYPE	MOTOR MODEL PREFIX	RATING			CIRCUIT BREAKERS OR FUSE AMPS (MAXIMUM PER NEC)			CIRCUIT BREAKERS OR FUSE AMPS (TYPICAL SUBMERSIBLE)		
		HP	KW	VOLTS	STANDARD FUSE	DUAL ELEMENT TIME DELAY FUSE	CIRCUIT BREAKER	STANDARD FUSE	DUAL ELEMENT TIME DELAY FUSE	CIRCUIT BREAKER
4"	234501	1/2	0.37	200	10	5	8	10	4	15
	234511			230	8	4.5	6	8	4	15
	234541			380	5	2.5	4	5	2	15
	234521			460	4	2.25	3	4	2	15
	234531			575	3	1.8	3	3	1.4	15
	234502	3/4	0.55	200	15	7	10	12	5	15
	234512			230	10	5.6	8	10	5	15
	234542			380	6	3.5	5	6	3	15
	234522			460	5	2.8	4	5	3	15
	234532			575	4	2.5	4	4	1.8	15
	234503	1	0.75	200	15	8	15	15	6	15
	234513			230	15	7	10	12	6	15
	234543			380	8	4.5	8	8	4	15
	234523			460	6	3.5	5	6	3	15
	234533			575	5	2.8	4	5	2.5	15
	234504	1.5	1.1	200	20	12	15	20	8	15
	234514			230	15	9	15	15	8	15
	234544			380	10	5.6	8	10	4	15
	234524			460	8	4.5	8	8	4	15
	234534			575	6	3.5	5	6	3	15
	234305	2	1.5	200	25	15	20	25	11	20
	234315			230	25	12	20	25	10	20
	234345			380	15	8	15	15	6	15
	234325			460	15	6	10	11	5	15
	234335			575	10	5	8	10	4	15
	234306	3	2.2	200	35	20	30	35	15	30
	234316			230	30	17.5	25	30	12	25
	234346			380	20	12	15	20	8	15
	234326			460	15	9	15	15	6	15
	234336			575	15	7	10	11	5	15
	234307	5	3.7	200	60	35	50	60	25	50
	234317			230	50	30	40	45	20	40
	234347			380	30	17.5	25	30	12	25
	234327			460	25	15	20	25	10	20
	234337			575	20	12	20	20	8	20
	234308	7.5	5.5	200	90	50	70	80	35	70
	234318			230	80	45	60	70	30	60
	234348			380	45	25	40	40	20	40
	234328			460	40	25	30	35	15	30
	234338			575	30	17.5	25	30	12	25
	234349	10	7.5	380	70	40	60	60	25	60
	234329			460	60	30	45	50	25	45
	234339			575	45	25	35	40	20	35
	234549			380	70	35	60	60	25	60
	234595			460	60	30	45	50	25	45
	234598			575	45	25	35	40	20	35

Overload Protection of Three-Phase Submersible Motors Class 10 Protection Required

The characteristics of submersible motors are different than standard motors and special overload protection is required.

If the motor is locked, the overload protection must trip within 10 seconds to protect the motor windings. Subtrol/SubMonitor, a Franklin-approved adjustable overload relay, or a Franklin-approved fixed heater must be used.

Fixed heater overloads must be the ambient-compensated quick-trip type to maintain protection at high and low air temperatures.

All heaters and amp settings shown are based on total line amps. When determining amperage settings or making heater selections for a six-lead motor with a Wye-Delta starter, divide motor amps by 1.732.

Pages 29, 30 and 31 list the correct selection and settings for some manufacturers. Approval for other manufacturers' types not listed may be requested by calling Franklin's Submersible Service Hotline at 800-348-2420.

Refer to notes on page 30.

Table 29 - 60 Hz 4" Motors

HP	KW	VOLTS	NEMA STARTER SIZE	HEATERS FOR OVERLOAD RELAYS		ADJUSTABLE RELAYS (NOTE 3)	
				FURNAS (NOTE 1)	G.E. (NOTE 2)	SET	MAX.
1/2	0.37	200	00	K31	L380A	3.2	3.4
		230	00	K28	L343A	2.7	2.9
		380	00	K22	L211A	1.7	1.8
		460	00	-	L174A	1.4	1.5
		575	00	-	-	1.2	1.3
3/4	0.55	200	00	K34	L510A	4.1	4.4
		230	00	K32	L420A	3.5	3.8
		380	00	K27	L282A	2.3	2.5
		460	00	K23	L211A	1.8	1.9
		575	00	K21	L193A	1.5	1.6
1	0.75	200	00	K37	L618A	5.0	5.4
		230	00	K36	L561A	4.4	4.7
		380	00	K28	L310A	2.6	2.8
		460	00	K26	L282A	2.2	2.4
		575	00	K23	L211A	1.8	1.9
1.5	1.1	200	00	K42	L750A	6.3	6.8
		230	00	K39	L680A	5.5	5.9
		380	00	K32	L420A	3.3	3.6
		460	00	K29	L343A	2.8	3.0
		575	00	K26	L282A	2.2	2.4
2	1.5	200	0	K50	L111B	8.6	9.3
		230	0	K49	L910A	7.5	8.1
		380	0	K36	L561A	4.6	4.9
		460	00	K33	L463A	3.8	4.1
		575	00	K29	L380A	3.0	3.2
3	2.2	200	0	K55	L147B	11.6	12.5
		230	0	K52	L122B	10.1	10.9
		380	0	K41	L750A	6.1	6.6
		460	0	K37	L618A	5.1	5.5
		575	0	K34	L510A	4.1	4.4
5	3.7	200	1	K62	L241B	19.1	20.5
		230	1	K61	L199B	16.6	17.8
		380	0	K52	L122B	10.0	10.8
		460	0	K49	L100B	8.3	8.9
		575	0	K42	L825A	6.6	7.1
7.5	5.5	200	1	K68	L332B	28.4	30.5
		230	1	K67	L293B	24.6	26.4
		380	1	K58	L181B	14.9	16.0
		460	1	K55	L147B	12.3	13.2
		575	1	K52	L122B	9.9	10.6
10	7.5	380	1	K62	L241B	19.5	21.0
		460	1	K60	L199B	16.1	17.3
		575	1	K56	L165B	12.9	13.6

SubMonitor Three-Phase Protection

Applications

SubMonitor is designed to protect 3-phase pumps/motors with service factor amp ratings (SFA) from 5 to 350 A (approx. 3 to 200 hp). Current, voltage, and motor temperature are monitored using all three legs and allows the user to set up the SubMonitor quickly and easily.

Protects Against

- Under/Overload
- Under/Overvoltage
- Current Unbalance
- Overheated Motor
  (if equipped with Subtrol Heat Sensor)
- False Start (Chattering)
- Phase Reversal

Power Factor Correction

In some installations, power supply limitations make it necessary or desirable to increase the power factor of a submersible motor. The table lists the capacitive kVAR required to increase the power factor of large Franklin three-phase submersible motors to the approximate values shown at maximum input loading.

Capacitors must be connected on the line side of the overload relay, or overload protection will be lost.

Table 32 kVAR Required 60 Hz

MOTOR		KVAR REQUIRED FOR PF OF:		
HP	KW	0.90	0.95	1.00
5	3.7	1.2	2.1	4.0
7.5	5.5	1.7	3.1	6.0
10	7.5	1.5	3.3	7.0
15	11	2.2	4.7	10.0
20	15	1.7	5.0	12.0
25	18.5	2.1	6.2	15.0
30	22	2.5	7.4	18.0
40	30	4.5	11.0	24.0
50	37	7.1	15.0	32.0
60	45	8.4	18.0	38.0
75	55	6.3	18.0	43.0
100	75	11.0	27.0	60.0
125	93	17.0	36.0	77.0
150	110	20.0	42.0	90.0
175	130	9.6	36.0	93.0
200	150	16.0	46.0	110.0

Values listed are total required (not per phase).

Three-Phase Starter Diagrams

Three-phase combination magnetic starters have two distinct circuits: a power circuit and a control circuit.

The power circuit consists of a circuit breaker or fused line switch, contacts, and overload heaters connecting incoming power lines L1, L2, L3 and the three-phase motor.

The control circuit consists of the magnetic coil, overload contacts and a control device such as a pressure switch. When the control device contacts are closed, current flows through the magnetic contactor coil, the contacts close, and power is applied to the motor. Hand-Off-Auto switches, start timers, level controls and other control devices may also be in series in the control circuit.

Line Voltage Control

This is the most common type of control encountered. Since the coil is connected directly across the power lines L1 and L2, the coil must match the line voltage.

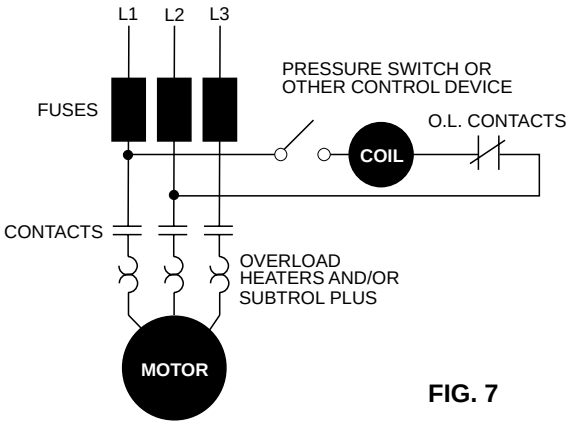

FIG. 7

Low Voltage Transformer Control

This control is used when it is desirable to operate push buttons or other control devices at some voltage lower than the motor voltage. The transformer primary must match the line voltage and the coil voltage must match the secondary voltage of the transformer.

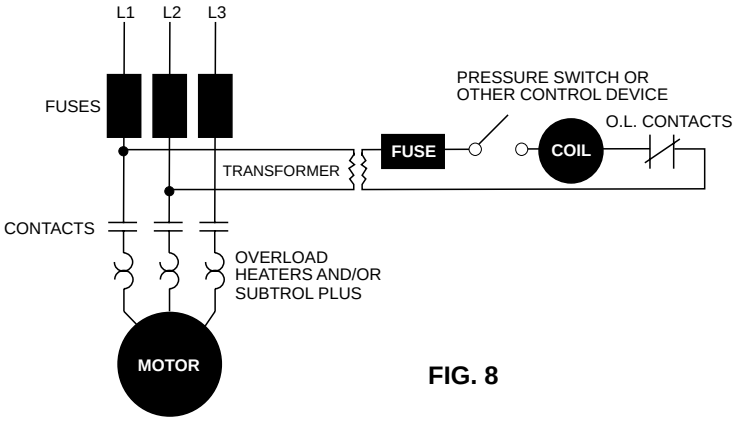

FIG. 8

External Voltage Controls

Control of a power circuit by a lower circuit voltage can also be obtained by connecting to a separate control voltage source. The coil rating must match the control voltage source, such as 115 or 24 volts.

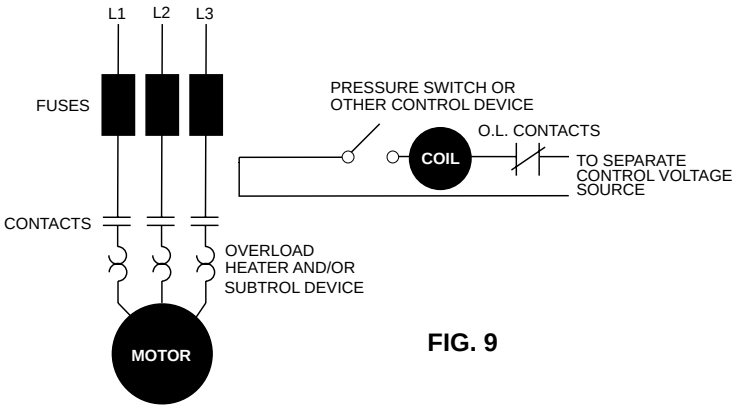

FIG. 9

Three-Phase Power Unbalance

A full three-phase supply is recommended for all three-phase motors, consisting of three individual transformers or one three-phase transformer. So-called “open” delta or Wye connections using only two transformers can be used, but are more likely to cause problems, such as poor performance, overload tripping or early motor failure due to current unbalance.

Transformer rating should be no smaller than listed in table 4 for supply power to the motor alone.

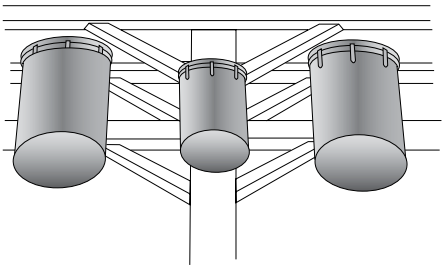

FIG. 10
FULL THREE-PHASE

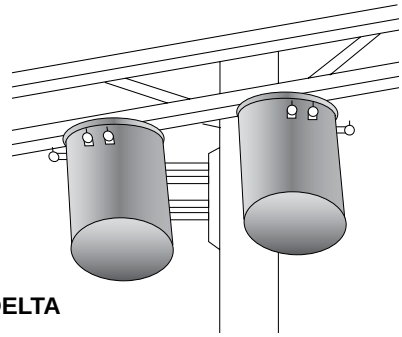

FIG. 11
OPEN DELTA

Checking and Correcting Rotation and Current Unbalance

1. Establish correct motor rotation by running the motor in both directions. Normal rotation is CCW viewing the shaft end. Rotation can be changed by interchanging any two of the three motor leads. The rotation that gives the most water flow is typically the correct rotation.
2. After correct rotation has been established, check the current in each of the three motor leads and calculate the current unbalance as explained in 3 below.

   If the current unbalance is 2% or less, leave the leads as connected.

   If the current unbalance is more than 2%, current readings should be checked on each leg using each of three possible hook-ups. Roll the motor leads across the starter in the same direction to prevent motor reversal.
3. To calculate percent of current unbalance:
   A. Add the three line amps values together.
   B. Divide the sum by three, yielding average current.
   C. Pick the amp value which is furthest from the average current (either high or low).
   D. Determine the difference between this amp value (furthest from average) and the average.
   E. Divide the difference by the average. Multiply the result by 100 to determine percent of unbalance.
4. Current unbalance should not exceed 5% at max amp load or 10% at rated input load. If the unbalance cannot be corrected by rolling leads, the source of the unbalance must be located and corrected. If, on the three possible hookups, the leg farthest from the average stays on the same power lead, most of the unbalance is coming from the “power side” of the system. If the reading farthest from average moves with the same motor lead, the primary source of unbalance is on the “motor side” of the starter. In this instance, consider a damaged cable, leaking splice, poor connection, or faulty motor winding.

Phase designation of leads for CCW rotation viewing shaft end.

To reverse rotation, interchange any two leads.

Phase 1 or “A” - Black, T1, or U1

Phase 2 or “B” - Yellow, T2, or V1

Phase 3 or “C” - Red, T3, or W1

NOTICE: Phase 1, 2 and 3 may not be L1, L2 and L3.

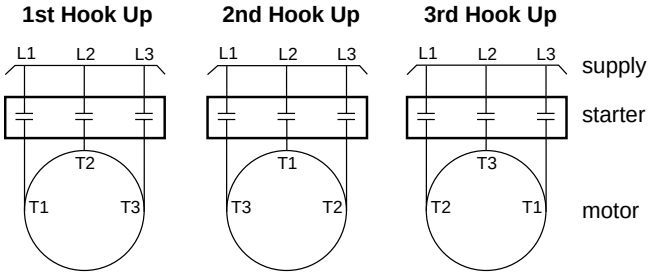

EXAMPLE:

T1 = 51 amps	T3 = 50 amps	T2 = 50 amps
T2 = 46 amps	T1 = 49 amps	T3 = 48 amps
+ T3 = 53 amps	+ T2 = 51 amps	+ T1 = 52 amps
Total = 150 amps	Total = 150 amps	Total = 150 amps
$\frac{150}{3}$ = 50 amps	$\frac{150}{3}$ = 50 amps	$\frac{150}{3}$ = 50 amps
50 - 46 = 4 amps	50 - 49 = 1 amp	50 - 48 = 2 amps
$\frac{4}{50}$ = 0.08 or 8%	$\frac{1}{50}$ = 0.02 or 2%	$\frac{2}{50}$ = 0.04 or 4%

Three-Phase Motor Lead Identification

Line Connections — Six-Lead Motors

WARNING: When installing 6-lead motors extra care must be used to ensure lead identification at the surface. Leads must be marked and connected per diagram. Motor leads are not connected red to red, yellow to yellow, etc.

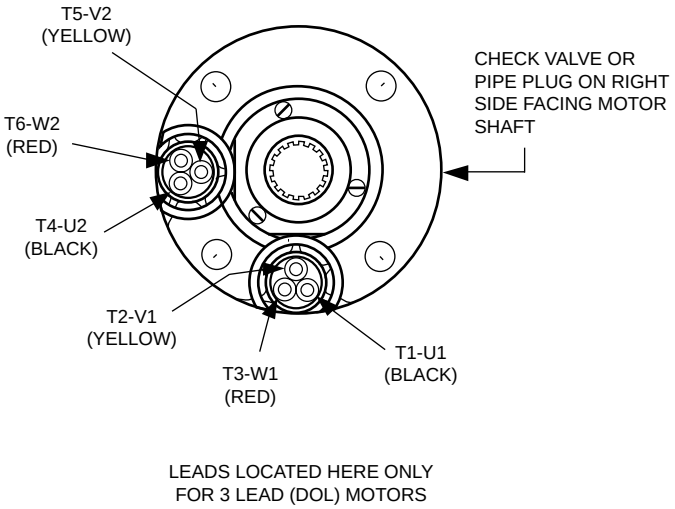

90° Lead Spacing

Connections for across-the-line starting, running, and any reduced voltage starting except WYE-DELTA type starters.

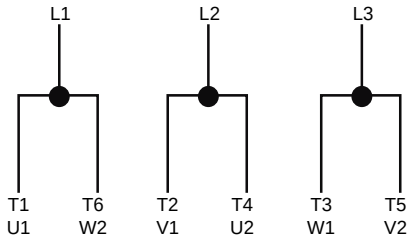

WYE-DELTA starters connect the motor as shown below during starting, then change to the running connection shown at the left.

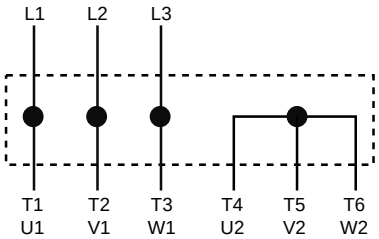

Each motor lead is numbered with two markers, one near each end. To reverse rotation, interchange any two line connections.

Phase Converters

There are a number of different types of phase converters available. Each generates three-phase power from a single-phase power line.

In all phase converters, the voltage balance is critical to current balance. Although some phase converters may be well balanced at one point on the system-operating curve, submersible pumping systems often operate at differing points on the curve as water levels and operating pressures fluctuate. Other converters may be well balanced at varying loads, but their output may vary widely with fluctuations in the input voltage.

The following guidelines have been established for submersible installations to be warrantable when used with a phase converter.

1. Limit pump loading to rated horsepower. Do not load into motor service factor.
2. Maintain at least 3 ft/s flow past the motor. Use a flow sleeve when necessary.
3. Use time delay fuses or circuit breakers in pump panel. Standard fuses or circuit breakers do not provide secondary motor protection.
4. SubMonitor may be used with electro mechanical type phase converters, however special connections are required. Consult SubMonitor Manual for connections of receiver and lightning arrestor.
5. SubMonitor will not work with electronic solid state phase converters.
6. Current unbalance must not exceed 10%.

Reduced Voltage Starters

All Franklin three-phase submersible motors are suitable for full-voltage starting. Under this condition the motor speed goes from zero to full speed within a half second or less. The motor current goes from zero to locked rotor amps, then drops to running amps at full speed. This may dim lights, cause momentary voltage dips to other electrical equipment, and shock power distribution transformers.

In some cases the power companies may require reduced-voltage starters to limit this voltage dip. There are also times when reduced-voltage starters may be desirable to reduce motor starting torque thus reducing the stress on shafts, couplings, and discharge piping. Reduced-voltage starters also slow the rapid acceleration of the water on start-up to help control upthrust and water hammer.

Reduced-voltage starters may not be required if the maximum recommended cable length is used. With maximum recommended cable length there is a 5% voltage drop in the cable at running amps, resulting in about 20% reduction in starting current and about 36% reduction in starting torque compared to having rated voltage at the motor. This may be enough reduction in starting current so that reduced-voltage starters are not required.

Three-Lead Motors: Autotransformer or solid-state reduced-voltage starters may be used for soft-starting standard three-phase motors.

When autotransformer starters are used, the motor should be supplied with at least 55% of rated voltage to ensure adequate starting torque. Most autotransformer starters have 65% and 80% taps. Setting the taps on these starters depends on the percentage of the maximum allowable cable length used in the system. If the cable length is less than 50% of the maximum allowable, either the 65% or the 80% taps may be used. When the cable length is more than 50% of allowable, the 80% tap should be used.

Six-Lead Motors: Wye-Delta starters are used with six-lead Wye-Delta motors. All Franklin 6" and 8" three-phase motors are available in six-lead Wye-Delta construction. Consult the factory for details and availability. Part winding starters are not compatible with Franklin Electric submersible motors and should not be used.

Wye-Delta starters of the open-transition type, which momentarily interrupt power during the starting cycle, are not recommended. Closed-transition starters have no interruption of power during the start cycle and can be used with satisfactory results.

Reduced-voltage starters have adjustable settings for acceleration ramp time, typically preset at 30 seconds. They must be adjusted so the motor is at full voltage within THREE SECONDS MAXIMUM to prevent excessive radial and thrust bearing wear.

If Subtrol-Plus or SubMonitor is used the acceleration time must be set to TWO SECONDS MAXIMUM due to the 3 second reaction time of the Subtrol-Plus or SubMonitor.

Solid-state starters AKA soft starts may not be compatible with Subtrol-Plus/SubMonitor. However, in some cases a bypass contactor has been used. Consult the factory for details.

During shutdown, Franklin Electric's recommendation is for the power to be removed, allowing the pump/motor to coast down. Stopping the motor by ramping down the voltage is possible, but should be limited to three (3) seconds maximum.

Inline Booster Pump Systems

Franklin Electric offers three different types of motors for non-vertical applications.

1. The **Booster** motors are specifically designed for booster applications. They are the **"Best Choice" for sealed Reverse Osmosis applications.** These motors are the result of two years of focused development and bring additional value and durability to booster module systems. These motors are only available to OEMs or Distributors who have demonstrated capability in Booster Module systems design and operation and adhere to Franklin's Application Manual requirements.

2. The **Hi-Temp** motors have many of the internal design features of the Booster motor. It's additional length allows for higher temperature handling and the Sand Fighter sealing system provides greater abrasion resistance. One or both of these conditions are often experienced in open atmosphere applications such as lakes, ponds, etc.

3. The **Standard Vertical Water Well** (40-125 hp) motors can be adapted to non-vertical applications when applied per the below guidelines. However, they will be more sensitive to application variances than the other two designs.

All of the above motors must be applied per the guidelines listed below. In addition, for all applications where the motor is applied in a sealed system, a Submersible Motor Booster Installation Record (Form 3655) or its equivalent must be completed at startup and received by Franklin Electric within 60 days. A sealed system is one where the motor and pump intake are mounted in a sleeve and the water feeding the pump intake is not open to the atmosphere.

Continued on next page

Inline Booster Pump Systems (continued)

Design And Operational Requirements

1. **Non-Vertical Operation:** Vertical Shaft-up (0°) to Horizontal (90°) operation is acceptable as long as the pump transmits "down-thrust" to the motor within 3 seconds after start-up and continuously during operation. However, it is best practice to provide a positive slope whenever it is possible, even if it is only a few degrees.

2. **Motor, Sleeve, and Pump Support System:** The booster sleeve ID must be sized according to the motor cooling and pump NPSHR requirements. The support system must support the motor's weight, prevent motor rotation and keep the motor and pump aligned. The support system must also allow for thermal axial expansion of the motor without creating binding forces.

3. **Motor Support Points:** A minimum of two support points are required on the motor. One in the motor/pump flange connection area and one in the bottom end of the motor area. The motor castings, not the shell area, are recommended as support points. If the support is a full length support and/or has bands in the shell area, they must not restrict heat transfer or deform the shell.

4. **Motor Support Material and Design:** The support system shall not create any areas of cavitation or other areas of reduced flow less than the minimum rate required by this manual. They should also be designed to minimize turbulence and vibration and provide stable alignment. The support materials and locations must not inhibit the heat transfer away from the motor.

5. **Motor and Pump Alignment:** The maximum allowable misalignment between the motor, pump, and pump discharge is 0.025 inch per 12 inches of length (2 mm per 1000 mm of length). This must be measured in both directions along the assembly using the motor/pump flange connection as the starting point. The booster sleeve and support system must be rigid enough to maintain this alignment during assembly, shipping, operation and maintenance.

6. The best motor lubrication and heat resistance is obtained with the factory based propylene glycol fill solution. Only when an application MUST HAVE deionized (DI) water should the factory fill solution be replaced. When a deionized water fill is required, the motor must be derated as indicated on the below chart. The exchange of the motor fill solution to DI water must be done by an approved Franklin service shop or representative using a vacuum fill system per Franklin's Motor Service Manual instruction. The motor shell then must be permanently stamped with a D closely behind the Serial Number.

   The maximum pressure that can be applied to the motor internal components during the removal of the factory fill solution is 7 psi (0.5 bar.)

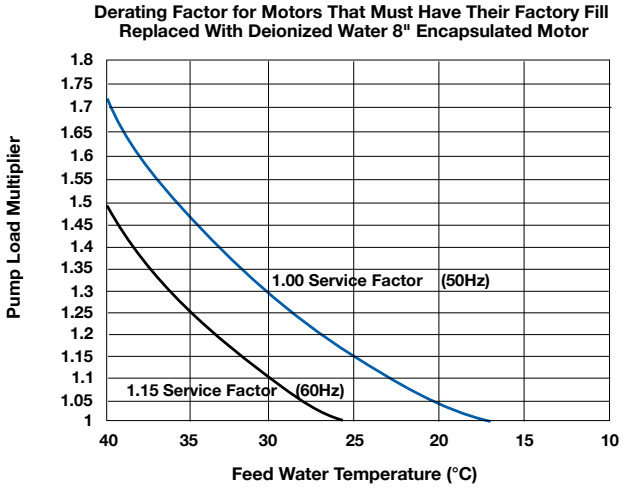

FIG. 12

First: Determine maximum Feed Water Temperature that will be experienced in this application. If the feed water exceeds the maximum ambient of the motor, both the DI water derating and a hot water application derating must be applied.

Second: Determine the Pump Load Multiplier from the appropriate Service Factor curve. (Typical 1.15 Service Factor is for 60 Hz ratings &1.00 Service Factor for 50 Hz ratings).

Third: Multiply the Pump Load Requirement times the pump load multiplier number indicated on the vertical axis to determine the Minimum Motor Nameplate Rating.

Fourth: Select a motor with a nameplate equal or higher than the above calculated value.

7. **Motor Alterations - Sand Slinger & Check Valve Plug:** On 6" and 8" motors, the rubber sand slinger located on the shaft must be removed. If a pipe plug is covering the check valve, it must be removed. The special Booster motor already has these modifications.

8. **Frequency of Starts:** Fewer than 10 starts per 24-hour period are recommended. Allow at least 20 minutes between shutdown and start-up of the motor.

Continued on next page

Inline Booster Pump Systems (continued)

9. **Controls-Soft Starters and VFDs:** Reduced voltage starters and variable speed drives (inverter drives) may be used with Franklin three-phase submersible motors to reduce starting current, upthrust, and mechanical stress during start-up. The guidelines for their use with submersible motors are different than with normal air cooled motor applications. Refer to the Franklin Electric Application, Installation and Maintenance (AIM) Manual Reduced Voltage Starters section or Variable Speed Submersible Pump Operation, Inverter Drives sections for specific details including required filtering.

10. **Motor Overload Protection:** Submersible motors require properly sized ambient compensated Class 10 quick-trip overloads per Franklin's AIM Manual guidelines to protect the motor. Class 20 or higher overloads are NOT acceptable. Franklin's SubMonitor is strongly recommended for all large submersibles since it is capable of sensing motor heat without any additional wiring to the motor. Applications using Soft Starters with a SubMonitor require a start-up bypass - consult the factory for details. SubMonitor can not be used in applications using a VFD control.

11. **Motor Surge Protection:** Properly sized, grounded and dedicated motor surge arrestors must be installed in the supply line of the booster module as close to the motor as possible. This is required on all systems including those using soft-starters and variable speed drives (inverter drives).

12. **Wiring:** Franklin's lead assemblies are only sized for submerged operation in water to the motor nameplate maximum ambient temperature and may overheat and cause failure or serious injury if operated in air. Any wiring not submerged must meet applicable national and local wiring codes and Franklin Cable Chart tables 16-21. (Notice: wire size, wire rating and insulation temperature rating must be known when determining its suitability to operate in air or conduit. Typically, for a given size and rating, as the insulation temperature rating increases its ability to operate in air or conduit also increases.)

13. **Check Valves:** Spring-loaded check valves must be used on start-up to minimize motor upthrusting, water hammer, or in multiple booster (parallel) applications to prevent reverse flow.

14. **Pressure Relief Valves:** A pressure relief valve is required and must be selected to ensure that, as the pump approaches shut-off, it never reaches the point that the motor will not have adequate cooling flow past it.

15. **System Purge (Can Flooding):** An air bleeder valve must be installed on the booster sleeve so that flooding may be accomplished prior to booster start-up. Once flooding is complete, the booster should be started and brought up to operating pressure as quickly as possible to minimize the duration of an upthrust condition. At no time should air be allowed to gather in the booster sleeve because this will prevent proper cooling of the motor and permanently damage it.

16. **System Flush – Must Not Spin Pump:** Applications may utilize a low flow flushing operation. Flow through the booster sleeve must not spin the pump impellers and the motor shaft. If spinning takes place, the bearing system will be permanently damaged and the motor life shortened. Consult the booster pump manufacturer for maximum flow rate through the pump when the motor is not energized.

Table 38 Franklin Cable chart (See 12. Wiring)

CABLE TEMP. RATING (°C)	MOTOR NAMEPLATE RATED AMPS FULL LOAD	#10 AWG		#8 AWG		#6 AWG		#4 AWG		#2 AWG	
		IN AIR	IN CONDUIT	IN AIR	IN CONDUIT	IN AIR	IN CONDUIT	IN AIR	IN CONDUIT	IN AIR	IN CONDUIT
75	3-LEAD (DOL)	40A	28A	56A	40A	76A	52A	100A	68A	136A	92A
	6-LEAD (Y-Δ)	69A	48A	97A	69A	132A	90A	173A	118A	236A	159A
90	3-LEAD (DOL)	44A	32A	64A	44A	84A	60A	112A	76A	152A	104A
	6-LEAD (Y-Δ)	76A	55A	111A	76A	145A	104A	194A	132A	263A	180A
125	3-LEAD (DOL)	66A	46A	77A	53A	109A	75A	153A	105A	195A	134A
	6-LEAD (Y-Δ)	114A	80A	133A	91A	188A	130A	265A	181A	337A	232A

Based on 30 °C maximum ambient with cable length of 100 feet or less.

Continued on next page

Inline Booster Pump Systems (continued)

17. **Open Atmosphere Booster Pump Systems:** When an open booster is placed in a lake, tank, etc. that is open to atmospheric pressure, the water level must provide sufficient head pressure to allow the pump to operate above its NPSHR requirement at all times and all seasons. Adequate inlet pressure must be provided prior to booster start-up.

Four Continuous Monitoring System Requirements for Sealed Booster Systems.

1. **Water Temperature:** Feed water on each booster must be continuously monitored and not allowed to exceed the motor nameplate maximum ambient temperature at any time. IF THE INLET TEMPERATURE EXCEEDS THE MOTOR NAMEPLATE MAXIMUM AMBIENT TEMPERATURE, THE SYSTEM MUST SHUTDOWN IMMEDIATELY TO PREVENT PERMANENT MOTOR DAMAGE. If feed water temperatures are expected to be above the allowable temperature, the motor must be derated. See Franklin's AIM Manual Hot Water Applications section for derating guidelines. (The high temperature feed water derating is in addition to the exchange to DI water derating if the motor factory fill solution was exchanged to DI water.)

2. **Inlet Pressure:** The inlet pressure on each booster module must be continuously monitored. It must always be positive and higher than the NPSHR (Net Positive Suction Head Requirement) of the pump. A minimum of 20 PSIG (1.38 Bar) is required at all times, except for 10 seconds or less when the motor is starting and the system is coming up to pressure. Even during these 10 seconds the pressure must remain positive and be higher than the NPSHR (Net Positive Suction Head Requirement) of the pump.

   PSIG is the actual value displayed on a pressure gauge in the system piping. PSIG is the pressure above the atmospheric conditions. If at any time these pressure requirements are not being met, the motor must be de-energized immediately to prevent permanent damage to the motor. Once the motor is damaged, it is usually not immediately noticeable, but progresses and results in a premature motor failure weeks or months after the damage occurred.

   Motors that will be exposed to pressure in excess of 500 psi (34.47 Bar) must undergo special high pressure testing. Consult factory for details and availability.

3. **Discharge Flow:** The flow rate for each pump must not be allowed to drop below the motor minimum cooling flow requirement. IF THE MOTOR MINIMUM COOLING FLOW REQUIREMENT IS NOT BEING MET FOR MORE THAN 10 SECONDS, THE SYSTEM MUST BE SHUT DOWN IMMEDIATELY TO PREVENT PERMANENT MOTOR DAMAGE.

4. **Discharge Pressure:** The discharge pressure must be monitored to ensure that a downthrust load toward the motor is present within 3 seconds after start-up and continuously during operation. IF THE MOTOR DISCHARGE PRESSURE IS NOT ADEQUATE TO MEET THIS REQUIREMENT, THE SYSTEM MUST BE SHUT DOWN IMMEDIATELY TO PREVENT PERMANENT MOTOR DAMAGE.

Variable Frequency Drive Submersible Motor Requirements

Franklin Electric's three-phase, encapsulated submersible motors can be used with variable frequency drives (VFD) when applied within the guidelines below.

All three-phase, encapsulated submersible motors must have the VFD sized based on the motor's nameplate maximum amps, not horsepower. The continuous rated amps of the VFD must be equal to or greater than the motor's nameplate maximum amps or warranty will be void.

Franklin Electric's single-phase, 2- and 3-wire, encapsulated submersible motors can only be used with the appropriate Franklin constant pressure controller.

Franklin Electric's submersible motor Application Installation Maintenance (AIM) manual should be checked for the latest guidelines and can be found online at www.franklin-electric.com.

WARNING: There is a potential shock hazard from contact with and/or touching the insulated cables connected to the variable frequency drive output anytime the motor has energy applied.

Output Filter Requirement Test:

NOTICE: An incoming power supply or line-side filter for the drive does not replace the need for additional output filters.

An output filter is required if the answer is yes to one or both of the items below:
#1 - Is the VFD's pulse width modulation (PWM) voltage rise-time (dV/dt) more than 500 Volts per micro-second (500 V/µ-second)?

#2 - Is the motor nameplate voltage more than 379 Volts and is the cable from drive-to-motor more than 50 ft (15.2 m)?

NOTICE:
More than 99% of the drives applied on water well submersible motors will require the purchase of additional output filtering based on question #1.

Output filters can be expensive. However, when needed, it is required for the motor to be considered for warranty. Make sure this item is not overlooked when quoting a job.

PWM dV/dt value can be defined as: the rate at which voltage is changing with time or how fast the voltage is accelerating. This information can be supplied by the drive manufacturer or the manufacturer's drive specification sheet. The dV/dt value cannot be measured with typical field equipment, even when using a true-RMS voltage/amperage multi-meter.

Franklin Electric has a line of VFDs that are specifically designed for Franklin application systems. These VFDs are used in the MonoDrive and SubDrive constant pressure systems. Franklin drive systems have the required additional output filtering installed; however, the SubDrive HPX does not.

Types of Output Filters:

A resistor-inductor-capacitor (RLC) filter has both a high pass filter & a low pass filter section and are considered the best practice, but a high pass reactor filter is also acceptable.

Filters should be recommended by the drive manufacturer; for the correct recommendations provide them with answers to all five of the items below.

REQUIRED ITEMS FOR PROPER VFD FILTER SIZING:
(1) VFD model (2) Carrier frequency setting (3) Motor nameplate voltage (4) Motor nameplate max amps (5) Cable length from the drive output terminals to the motor

Input Current & Motor Overload Protection:

- Motor input current should be set at the system's typical operating current when running at nameplate rated voltage and frequency (Hz).
- Motor overload protection should be set to trip at 115% of the system's typical operating current.
- Motor overload protection must trip equal to or faster than NEMA Class 10 motor overload curve requirements.

Motor Maximum Load Limits:

- The system must never operate in excess of the motor nameplate maximum amps.
- On 50 Hz motors, nameplate amps are maximum amps as these motors have a 1.0 service factor.

Variable Frequency Drive Submersible Motor Requirements

Motor Operating Hertz, Cooling Requirements & Underload Settings:

- Standard practice for large VFD installations is to limit the operation to 60 Hz max. Operating at greater than 60 Hz requires special system design considerations.
- The motor must never operate below 30 Hz. This is the minimum speed required to provide correct bearing lubrication.
- The motor's operating speed must always operate so the minimum water flow requirements of 0.5 ft/sec for 6-inch & 8-inch motors and 0.25 ft/sec for 4-inch motors is supplied.
- The motor underload protection is normally set to trip at 80% of the system's typical operating current. However, the underload trip point must be selected so that minimum flow requirements are always met.

Starting & Stopping Ramp Settings:

- The motor must reach or pass the 30 Hz operating speed within 1 second of the motor being energized. If this does not occur, the motor bearings will be damaged and the motor life reduced.
- The best stopping method is to turn power off followed by a natural coast to stop.
- A controlled stop from 30 Hz to 0 Hz is allowed if the time does not exceed 1 second.

Drive Carrier Frequency:

- The carrier frequency is set in the field. The drive typically has a selectable range between 2k and 12k Hz. The higher the carrier wave frequency setting, the greater the voltage spikes; the lower the carrier wave frequency setting, the rougher/poorer the shape of the power curve.
- The carrier frequency should be set within the range of 4k to 5k Hz for encapsulated submersible motors.

Application Function Setting:

- If the VFD has a setting of centrifugal pump or propeller fan it should be used.
- Centrifugal pumps and fans have similar load characteristics.

VFD Frequency of Starts:

- Keeping the starts per day within the recommended numbers shown in the frequency of starts section of the AIM manual provides the best system life. However, since in-rush current is typically reduced when used with a properly configured VFD, large 3-phase submersible motors can be started more frequently. In all cases a minimum of 7 minutes must be allowed between a power off and the next restart attempt or consecutive restart attempts.

NEMA MG1 Above Ground Motor Standard Comments:

- Franklin Electric encapsulated submersible motors are not declared inverter duty motors by NEMA MG1 standards. The reason is NEMA MG1 standard part 31 does not include a section covering encapsulated winding designs.
- Franklin submersible motors can be used with VFDs without problems or warranty concerns providing Franklin's Application Installation Maintenance (AIM) manual guidelines are followed. See Franklin's on-line AIM manual for the latest guidelines.

4" Super Stainless — Dimensions

(Standard Water Well)

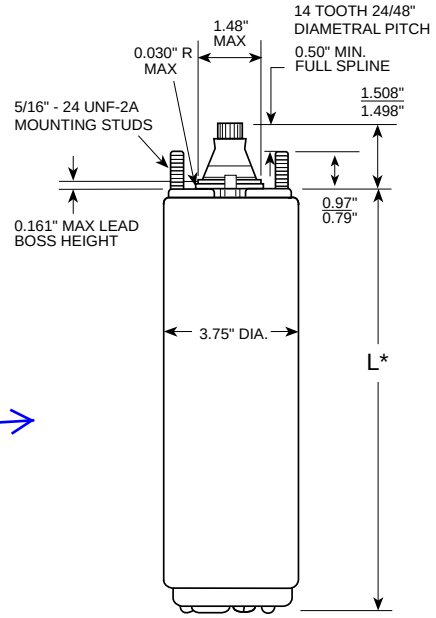

4" High Thrust — Dimensions

(Standard Water Well)

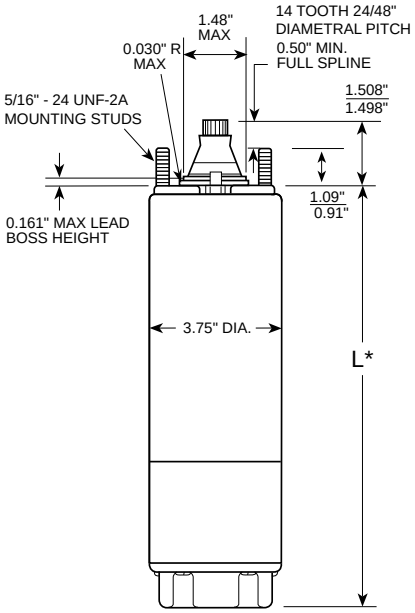

6" — Dimensions

(Standard Water Well)

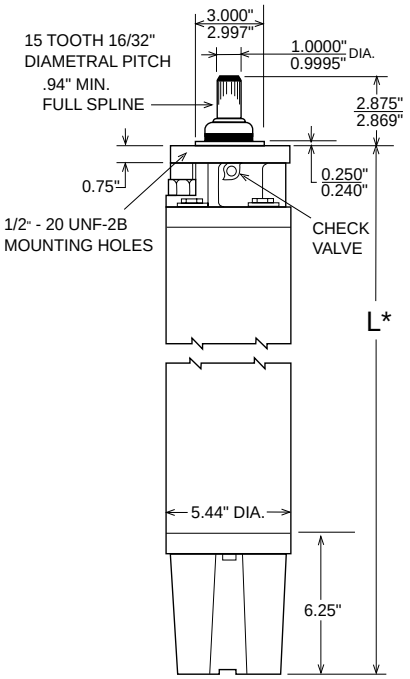

8" — Dimensions

(Standard Water Well)

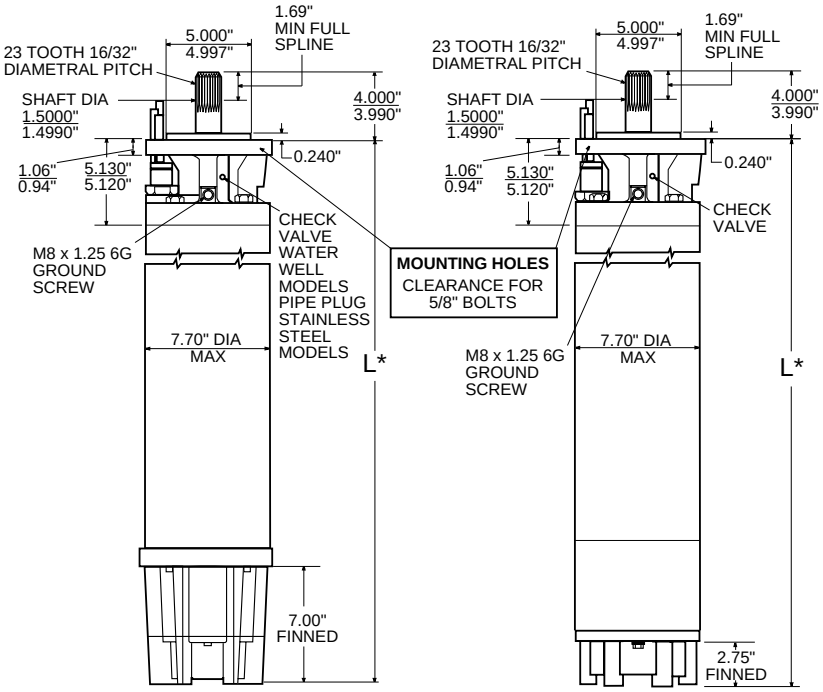

40 to 100 hp

125 to 200 hp

*** Motor lengths and shipping weights are available on Franklin Electric's web site (www.franklin-electric.com) or by calling Franklin's submersible hotline (800-348-2420).**

Tightening Motor Lead Connector Jam Nut

4" Motors with Jam Nut:
15 to 20 ft-lb (20 to 27 Nm)

4" Motors with 2 Screw Clamp Plate:
35 to 45 in-lb (4.0 to 5.1 Nm)

6" Motors:
40 to 50 ft-lb (54 to 68 Nm)

8" Motors with 1-3/16" to 1-5/8" Jam Nut:
50 to 60 ft-lb (68 to 81 Nm)

8" Motors with 4 Screw Clamp Plate:
Apply increasing torque to the screws equally in a criss-cross pattern until 80 to 90 in-lb (9.0 to 10.2 Nm) is reached.

Jam nut tightening torques recommended for field assembly are shown. Rubber compression set within the first few hours after assembly may reduce the jam nut torque. This is a normal condition which does not indicate reduced seal effectiveness. Retightening is not required, but is permissible and recommended if original torque was questionable.

A motor lead assembly should not be reused. A new lead assembly should be used whenever one is removed from the motor, because rubber set and possible damage from removal may prevent proper resealing of the old lead.

All motors returned for warranty consideration must have the lead returned with the motor.

Pump to Motor Coupling

Assemble coupling with non-toxic FDA approved waterproof grease such as Mobile FM102, Texaco CYGNUS2661, or approved equivalent. This prevents abrasives from entering the spline area and prolongs spline life.

Pump to Motor Assembly

After assembling the motor to the pump, torque mounting fasteners to the following:

4" Pump and Motor: 10 lb-ft (14 Nm)

6" Pump and Motor: 50 lb-ft (68 Nm)

8" Pump and Motor: 120 lb-ft (163 Nm)

Shaft Height and Free End Play

Table 42

MOTOR	NORMAL SHAFT HEIGHT		DIMENSION SHAFT HEIGHT		FREE END PLAY	
					MIN.	MAX.
4"	1 1/2"	38.1 mm	1.508" / 1.498"	38.30 / 38.05 mm	0.010" 0.25 mm	0.045" 1.14 mm
6"	2 7/8"	73.0 mm	2.875" / 2.869"	73.02 / 72.88 mm	0.030" 0.76 mm	0.050" 1.27 mm
8" TYPE 1	4"	101.6 mm	4.000" / 3.990"	101.60 / 101.35 mm	0.008" 0.20 mm	0.032" 0.81 mm
8" TYPE 2.1	4"	101.6 mm	4.000" 3.990"	101.60 101.35 mm	0.030" 0.76 mm	0.080" 2.03 mm

If the height, measured from the pump-mounting surface of the motor, is low and/or end play exceeds the limit, the motor thrust bearing is possibly damaged, and should be replaced.

Submersible Leads and Cables

A common question is why motor leads are smaller than specified in Franklin's cable charts.

The leads are considered a part of the motor and actually are a connection between the large supply wire and the motor winding. The motor leads are short and there is virtually no voltage drop across the lead.

In addition, the lead assemblies **operate under water**, while at least part of the supply cable must **operate in air.** Lead assemblies running under water operate cooler.

CAUTION: Lead assemblies on submersible motors are suitable only for use in water and may overheat and cause failure if operated in air.

System Troubleshooting

Motor Does Not Start

POSSIBLE CAUSE	CHECKING PROCEDURES	CORRECTIVE ACTION
A. No power or incorrect voltage.	Check voltage at line terminals. The voltage must be ± 10% of rated voltage.	Contact power company if voltage is incorrect.
B. Fuses blown or circuit breakers tripped.	Check fuses for recommended size and check for loose, dirty or corroded connections in fuse receptacle. Check for tripped circuit breakers.	Replace with proper fuse or reset circuit breakers.
C. Defective pressure switch.	Check voltage at contact points. Improper contact of switch points can cause voltage less than line voltage.	Replace pressure switch or clean points.
D. Control box malfunction.	For detailed procedure, see pages 48-56.	Repair or replace.
E. Defective wiring.	Check for loose or corroded connections or defective wiring	Correct faulty wiring or connections.
F. Bound pump.	Check for misalignment between pump and motor or a sand bound pump. Amp readings will be 3 to 6 times higher than normal until the overload trips	Pull pump and correct problem. Run new installation until the water clears
G. Defective cable or motor.	For detailed procedure, see pages 46 & 47.	Repair or replace.

Motor Starts Too Often

A. Pressure switch.	Check setting on pressure switch and examine for defects.	Reset limit or replace switch.
B. Check valve - stuck open.	Damaged or defective check valve will not hold pressure.	Replace if defective.
C. Waterlogged tank.	Check air charge	Clean or replace.
D. Leak in system.	Check system for leaks.	Replace damaged pipes or repair leaks.

System Troubleshooting

Motor Runs Continuously

POSSIBLE CAUSE	CHECKING PROCEDURES	CORRECTIVE ACTION
A. Pressure switch.	Check switch for welded contacts. Check switch adjustments.	Clean contacts, replace switch, or adjust setting.
B. Low water level in well.	Pump may exceed well capacity. Shut off pump, wait for well to recover. Check static and drawdown level from well head.	Throttle pump output or reset pump to lower level. Do not lower if sand may clog pump.
C. Leak in system.	Check system for leaks.	Replace damaged pipes or repair leaks.
D. Worn pump.	Symptoms of worn pump are similar to those of drop pipe leak or low water level in well. Reduce pressure switch setting, if pump shuts off worn parts may be the fault.	Pull pump and replace worn parts.
E. Loose coupling or broken motor shaft.	Check for loose coupling or damaged shaft.	Replace worn or damaged parts.
F. Pump screen blocked.	Check for clogged intake screen.	Clean screen and reset pump depth.
G. Check valve stuck closed.	Check operation of check valve.	Replace if defective.
H. Control box malfunction.	See pages 47-55 for single-phase.	Repair or replace.

Motor Runs But Overload Protector Trips

A. Incorrect voltage.	Using voltmeter, check the line terminals. Voltage must be within ± 10% of rated voltage.	Contact power company if voltage is incorrect.
B. Overheated protectors.	Direct sunlight or other heat source can raise control box temperature causing protectors to trip. The box must not be hot to touch.	Shade box, provide ventilation or move box away from source.
C. Defective control box.	For detailed procedures, see pages 47-55.	Repair or replace.
D. Defective motor or cable.	For detailed procedures, see pages 45 & 46.	Repair or replace.
E. Worn pump or motor.	Check running current, see tables 13, 22, 24 & 27.	Replace pump and/or motor.

Table 45 Preliminary Tests - All Sizes Single- and Three-Phase

TEST	PROCEDURE	WHAT IT MEANS
Insulation Resistance	1. Open master breaker and disconnect all leads from control box or pressure switch (QD type control, remove lid) to avoid electric shock hazard and damage to the meter. 2. Use a megohmmeter or set the scale lever to R X 100K on an ohmmeter. Zero the meter. 3. Connect one meter lead to any one of the motor leads and the other lead to the metal drop pipe. If the drop pipe is plastic, connect the meter lead to ground.	1. If the ohms value is normal (table 46), the motor is not grounded and the cable insulation is not damaged. 2. If the ohms value is below normal, either the windings are grounded or the cable insulation is damaged. Check the cable at the well seal as the insulation is sometimes damaged by being pinched.
Winding Resistance	1. Open master breaker and disconnect all leads from control box or pressure switch (QD type control, remove lid) to avoid electric shock hazard and damage to the meter. 2. Set the scale lever to R X 1 for values under 10 ohms. For values over 10 ohms, set the scale lever to R X 10. “zero” the ohmmeter. 3. On 3-wire motors measure the resistance of yellow to black (main winding) and yellow to red (start winding). On 2-wire motors: measure the resistance from line-to-line. Three-phase motors: measure the resistance line-to-line for all three combinations.	1. If all ohms values are normal (tables 13, 22, 24 & 27), the motor windings are neither shorted nor open, and the cable colors are correct 2. If any one value is less than normal, the motor is shorted. 3. If any one ohm value is greater than normal, the winding or the cable is open, or there is a poor cable joint or connection. 4. If some ohms values are greater than normal and some less on single-phase motors, the leads are mixed. See page 46 to verify cable colors.

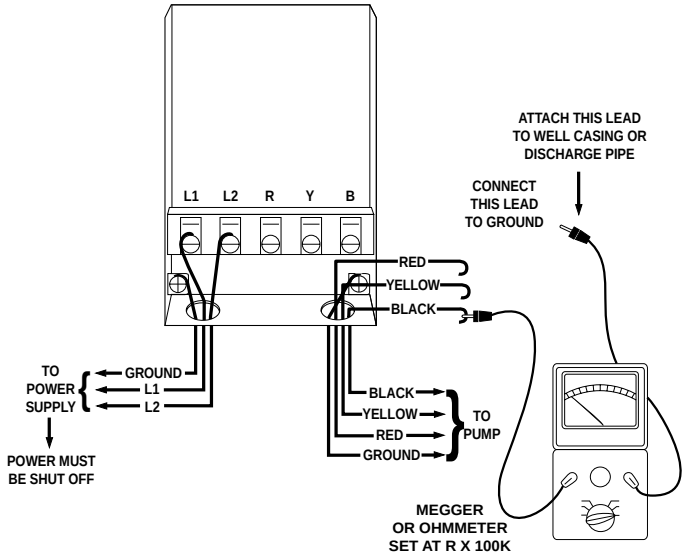

FIG. 13

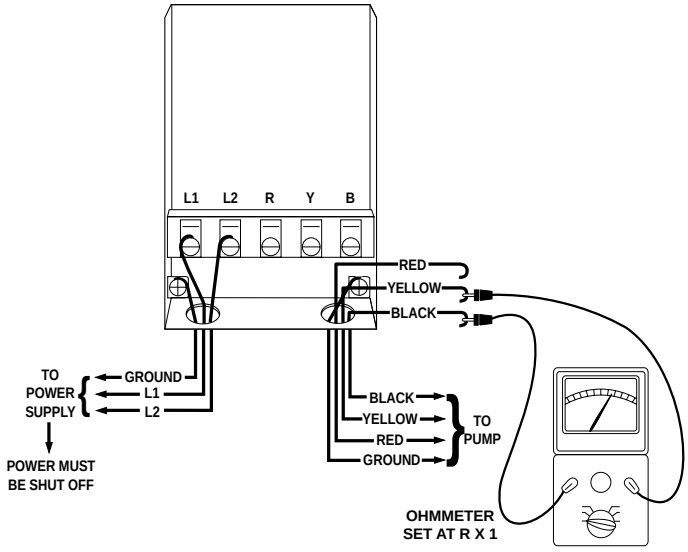

FIG. 14

Insulation Resistance Readings

Table 46 Normal ohm and Megohm Values Between All Leads and Ground

CONDITION OF MOTOR AND LEADS	OHMS VALUE	MEGOHM VALUE
A new motor (without drop cable).	200,000,000 (or more)	200.0 (or more)
A used motor which can be reinstalled in well.	10,000,000 (or more)	10.0 (or more)
MOTOR IN WELL. READINGS ARE FOR DROP CABLE PLUS MOTOR.		
New motor.	2,000,000 (or more)	2.0 (or more)
Motor in good condition.	500,000 - 2,000,000	0.50 - 2.0
Insulation damage, locate and repair.	Less than 500,000	Less than .50

Insulation resistance varies very little with rating. Motors of all hp, voltage, and phase rating have similar values of insulation resistance.

The table above is based on readings taken with a megohm meter with a 500 VDC output. Readings may vary using a lower voltage ohmmeter, consult Franklin Electric if readings are in question.

Resistance of Drop Cable (ohms)

The values below are for copper conductors. If aluminum conductor drop cable is used, the resistance will be higher. To determine the actual resistance of the aluminum drop cable, divide the ohm readings from this chart by 0.61. This chart shows total resistance of cable from control to motor and back.

Winding Resistance Measuring

The winding resistance measured at the motor should fall within the values in tables 13, 22, 24 & 27. When measured through the drop cable, the resistance of the drop cable must be subtracted from the ohmmeter readings to get the winding resistance of the motor. See table below.

Table 46A DC Resistance in ohms per 100 ft of Wire (Two conductors) @ 50 °F

AWG OR MCM WIRE SIZE (COPPER)	14	12	10	8	6	4	3	2
OHMS	0.544	0.338	0.214	0.135	0.082	0.052	0.041	0.032

1	1/0	2/0	3/0	4/0	250	300	350	400	500	600	700
0.026	0.021	0.017	0.013	0.010	0.0088	0.0073	0.0063	0.0056	0.0044	0.0037	0.0032

Attachment D

Air Stripper

QED Environmental Systems

EZ-Tray™ Air Stripper

System Operation and Maintenance Manual

P/N 95168 1/13/11

QED Environmental Systems

P.O. Box 3726 Ann Arbor, MI 48106-3726 USA
1-800-624-2026 Fax (734) 995-1170
info@qedenv.com www.qedenv.com

Table of Contents

Service Department Phone and Special Precautions — **1**

Basic System Description — **2-6**

Equipment Setup — **7-9**

Startup — **10-12**

System Shutdown Procedure — **13**

Equipment Maintenance Instructions — **14-15**

Troubleshooting — **16-19**

QED Warranty — **20-21**

Figures

Figure 1: General Drawing of E-Z Tray Air Stripper — **22**

Figure 2: Typical Tray Drawing — **23**

Figure 3: Typical Blower Piping — **24**

Figure 4: Typical Gravity Discharge Piping — **25**

Other Manuals Included (In Order of Appearance):

1. New York Blower Manual

2. G&L Pump Manual

3. Dwyer Gauge Manual

4. Gem Sensors Float Switch Manual

Service Department Phone & Special Precautions

Thank you for relying on QED Treatment Systems to handle your treatment needs. After reading your Operation and Maintenance Manual, if you have any questions regarding the startup or operation of your system, please contact the ***QED Service and Repair Department at 1-800-624-2026.***

PLEASE NOTE!

Read the QED Operation and Maintenance Manual First!
The manual will assist you in equipment hookups, installation, startup, maintenance, and troubleshooting.

It is Important That a Qualified, Licensed Electrician Perform All Electrical/Wiring Installation Work.
Please see “Equipment Set-Up” in the Operating Instructions section of this manual.

Follow the Manufacturers Instructions
All the mechanical equipment that was supplied with your air stripper system should include the respective manufacturer’s instruction manual for each piece of equipment.The documentation will either be found with the actual piece of equipment (if shipped loose) or found within a QED Operation and Maintenance manual that includes all relevant manufacturers’ instruction sheets.

Follow Safe Work Practices
Be sure to follow all associated safety practices.

EZ-Tray™ systems are fabricated from rugged stainless steel. Each system is pre-assembled and factory tested before shipment to your site. EZ-Tray™ low profile air strippers are built to meet site and project specifications, which can include a number of standard or optional pieces of equipment. Depending upon the specifics of your order, the equipment described in this manual may or may not be included with your system configuration. Please refer to your sales order for the equipment that should be included with your system. Equipment information will be found either within this O&M manual or in separate documentation provided in addition to this manual.

Air Pressure Gauge (Standard)
The standard pressure gauge reads the differential pressure between the sump pressure and atmospheric pressure, in inches of water column (" wc). The gauge is connected to the system via tubing that is attached to a pressure port on the air stripper sump. The air tubing from the sump leads to the "high" pressure port on the gauge. The "low" pressure port is left open to the atmosphere.

Demister (Standard)
A demister pad is installed beneath the air discharge stack located on the top cover of the unit. The purpose of the demister pad is to remove entrained water droplets that would have blown through the discharge stack. It is possible, though unlikely, that the demister pad may become plugged or fouled. If this occurs the demister pad is easily removed. Disconnect the vent line, take off the demister cap, and remove the demister. The demister pad can be cleaned with a pressure washer or replaced with a new one.

Gaskets (Standard)
Various gaskets are used in the EZ-Tray™ air stripper units. One gasket is installed in the air discharge stack flange, one gasket is used to form an air tight seal between the front hatch and aeration trays, and a felt gasket is located on the underside of each aeration tray and a gasket is used under each downcomer flange. Through the course of regular maintenance, these gaskets will eventually wear and will not seal effectively. When the gaskets are ripped, worn, or do not seal properly, these gaskets should be replaced. Contact QED for replacement gaskets and adhesive. *Please contact QED prior to making any gasket repairs or adjustments.*

Sight Tube (Standard)
The sight tube provides a means of easily viewing the water level in the sump tank.

Blower
The blowers on the EZ-Tray™ low profile air stripper units are typically cast aluminum type B spark resistant, direct drive @ 3450 rpm, with motor options of TEFC or EXP. Each blower is selected to meet the proper air flow requirements (cfm) at the anticipated working pressures (inches of water column) of each system.

It is critical that the blower damper be opened wide enough to provide the unit with the designated minimum flow. If the damper is opened too wide, however, high air flow can cause water entrainment, with water droplets caught up in the airstream and sent out of the air stripper discharge stack.

It is also critical that water does not enter the blower housing while the blower is in operation; this will damage your blower and void the warranty. The high water level alarm switch prevents this from happening. Make sure it is installed correctly. If not installed by QED, it is recommended that the blower piping be of an inverted-U design,capable of collecting water within the blower piping and minimizing the potential for blower flooding. Please refer to **Figure 3** for a typical blower piping configuration.

If water does accumulate in the blower, it must be removed from the blower housing before continuing operation. A small drain hole may be drilled and plugged on the bottom side of the blower housing to provide a means of discharging any water that may accumulate. Remove the plug temporarily to drain any water or take off the front panel of the fan housing and remove the water.

When starting the unit for the first time, check that the blower wheel is rotating in the direction of the arrow on the blower housing. If you hear the blower wheel rubbing or any odd sounds, shut down the system immediately and call QED.

Damper

The standard QED blowers normally have a damper on the discharge side of the blower. The damper is used to make adjustments to the air flow rate (cubic feet per minute) of your system. The air flow rate is increased by opening the damper, and decreased by closing the damper.

Use the damper to adjust the sump pressure to its proper operating value. By adjusting the sump pressure, the proper operating air flow through the air stripper will be achieved. Follow the instructions given in the earlier “Air Pressure Gauge” section to obtain the correct sump operating pressure. Using an air flow meter and an air pressure gauge together is desirable for confirming air flow and sump pressure, especially when attempting to troubleshoot any problems encountered with the air stripper operation. It is also recommended that you keep a log book of pressure readings so you can determine the frequency of cleaning required to minimize system fouling.

Air Blower Silencer

The air blower silencer reduces the dynamic noise level of the blower. The size of the silencer and the type of connection used to mount it is dictated by the size of the blower and the choice of options. If a silencer is purchased through QED, they are typically shipped loose, for customer installation. The silencer can be mounted either horizontally or vertically (through the use of an elbow) must be properly supported to avoid over-stressing the blower housing. Silencers exposed to high wind velocities must be properly secured.

Air Flow Meter

The air flow meter measures the amount of air flowing through the system. If it is a pitot tube-type, two air tubes lead from the air piping to a meter/gauge. To operate effectively, the pitot tube must be located a minimum required distance upstream and downstream from elbows, valves, etc. Refer to manufacturer’s installation instructions for proper installation procedures.

The air flow meter typically gives readings in feet per minute (FPM), which is then multiplied by the cross sectional area, (square feet), of the vent line to give cubic feet per minute (CFM). As stated in the damper section, the air flow meter is needed to make damper adjustments, especially after initial start-up.

Control Panel
The control panel serves two basic functions required for the safe operation of the system. The first is to provide the required electrical safety components for each motor (blowers and pumps) per NEC standards. These components consist of fuses,motor starters, and overload relays.

The second function is to provide the required process safety alarm components. The alarm circuit monitors the low air pressure switch and the high water level alarm switch. If either of these alarms occur, the alarm contacts will shut off the incoming water source (feed or well pumps) if the appropriate connections have been made. A qualified, licensed electrician should perform any and all electrical connections.

Control Panel Intrinsically Safe Components
EZ-Tray™ low profile air stripper systems that process potentially explosive concentrations of vapors require intrinsically safe (IS) signals to all electrical components housed in non-explosion proof enclosures. The IS signal does not have enough energy to ignite the concentration of any NEC classified explosive vapor. Typical components that need IS signals are the float switches and well probes. Determination of when IS signals are required is generally the responsibility of the ground water remediation engineer who has placed the order for a system. A qualified,licensed electrician should perform any and all electrical connections.

Water Flow Indicators and Totalizers
The digital water flow indicator, typically installed in the incoming process water line or shipped loose, reads the rate of flow (GPM) and the totalized flow (gallons). The flow meters are selected to exceed the maximum flow of your system while providing a wide working range. The digital face plate is battery operated and intrinsically safe. The mechanical components of the meter consists of a “turbine style” rotor which spins around a shaft that is axial to the flow of water.

The standard “nutating disc” meters have a totalizing function only. They operate on the positive-displacement principle, where the flow of water through the meter moves a disc which in turn rotates a magnet. Every magnet rotation corresponds to a fixed volume of fluid which is then added to the summed total of flow.

Feed and Discharge Pumps
Any transfer pumps included in the air stripper order have been selected by our engineering staff to meet all known flow and pressure requirements. The standard pumps are typically stainless steel centrifugal-type with motor options of EXP or TEFC. The standard pumps are not self-priming; they must be primed before starting by filling either the discharge port or the priming port with clean water until the entire pump chamber is full. The pipe/hose leading into the pump should also be full of water. Install throttle valves on the discharge lines for adjusting water flow rate. The valve should be throttled back until the motor draws “full-load amps” (refer to the current rating on the nameplate).

Warning: *If the pump is running wide open and it is not pumping against the required head, the pump will cavitate and adversely affect pump performance and pump life.*

Centrifugal transfer pumps used by QED typically must be throttled back if they are not pumping against the required head. Before initial system startup, double check the pump rotation. A pump shaft rotating in the wrong direction could spin off the pump impeller and cause serious damage to the pump. Pumps operating in the wrong rotation will show poor performance. Systems using pumps should have the flow rates tuned so that the discharge is keeping up with the feed pump.

High Water Level Alarm Switch

The high water level alarm switch is one of the two alarm interlocks that must be properly connected by a licensed electrician prior to the system's initial start-up. Please see the “Special Precautions” at the beginning of the “Equipment Setup” section for more information. The purpose of the high water level alarm switch is to prevent water from flooding the blower by shutting off the incoming contaminated water once it has reached a designated level. The high water level switch will send an alarm signal when it is approximately 3½ inches above the coupling from which its cord emerges.

Line Sampling Ports

The line sampling ports provide a quick and easy means to take a water sample of both incoming contaminated water and outgoing clean water. The sampling ports are the ball valves located on both the inlet and outlet piping. When starting the unit for the first time, double check that the valves on the sample ports are closed.

When taking a water sample, open the valve and let the water flow for at least 1 minute prior to taking the sample. This purges the sample port of any stagnant water. When purging the sample port on the contaminated water line, make sure the contaminated water is collected in some sort of storage container and then properly dispose of the water after sampling.

Low Air Pressure Alarm Switch

The low air pressure alarm switch is one of the two alarm interlocks that must be properly connected by a licensed electrician prior to the system's initial start up. Please see the “Special Precautions” at the beginning of “The Equipment Setup” section for more information. The low air pressure alarm switch monitors the blower for continuous water treatment.

Should the blower fail, the low air pressure switch should be wired to shut off all incoming water. It, like the air pressure gauge, is connected to the system via an air hose which is attached to a pressure port on the sump tank. The air hose is connected to the "high" pressure port on the switch. The "low" pressure port is open to the atmosphere. Periodically inspect and remove any water which may have accumulated in the tubing. The presence of water can affect proper switch operation.

Test the switch, at initial start up, by removing the air hose from the pressure port on the sump tank once the system is in full operation. This should set the system into an alarm condition and shut off the incoming contaminated water.

Main Disconnect Switch

The main disconnect switch removes power from the EZ-Tray™ low profile air stripper. A disconnect is required by the National Electric Code (NEC) and must be installed. Some control panels, not supplied by QED, contain an internal disconnect or circuit breaker to remove power. Disconnects supplied by QED are external to the control panel, providing flexibility in situations where a site already contains a disconnect for the air stripper system. A qualified, licensed electrician should perform any and all electrical connections.

Intermittent Operation

Some systems are ordered with the intermittent operation option. EZ-Tray™ low profile air stripper systems can be designed to run intermittently when continuous blower operation is a concern. When the feed water is flowing into the system, the blower will be in operation and the outlet pump (if provided) will maintain proper sump tank levels. When the feed water is shut down, the blower will run for an additional period of time to treat the water that had previously entered the air stripper before shutting down. When the feed water is restored, the blower will start up to treat the new incoming water. The benefits of intermittent operation are lower operating costs, better control of noise, and longer motor life.

Water Temperature Gauge

The temperature gauges can be installed on both the inlet and outlet piping. The water temperature represents an important factor when estimating the system's performance since it directly effects removal efficiency. Temperature gauges provided by QED typically have a range of 0-140º F.

Water Pressure Gauge

Water pressure gauges can be installed on both the inlet and outlet water lines. The gauges can be used to determine the water pressures entering and exiting the system. Excessively high readings could signal that something in your system is plugged. Large fluctuations in the pressure readings could be a sign that the water flow rate is varying.

Special Precautions!

Use a Licensed, Qualified Electrician for Any and All Electrical/Wiring Work, and Always Use Proper Work Safety Practices!

Follow All Applicable Codes
The plumbing and electrical installations must be performed by qualified personnel. All installations must be done in accordance with local, state and national codes.

Install Adequate Supports on Piping and Ductwork
The external process piping that will connect into and from the QED equipment should be properly supported to minimize stresses and vibration from non-QED equipment. The QED equipment is not designed to support the process water and air lines without proper structural support.

Do Not Run Free Product, Oil or Grease Through the Air Stripper
Free product will contaminate the unit by coating the side walls with a film of free-product. Air strippers are not designed to treat free product, oil, grease, or any other type of immiscible phase.

Equipment Setup Steps

Depending upon how the system was ordered, some of the following instructions may not apply.

Setup Step 1. Secure/Mount the Equipment
For shipping purposes, the EZ-Tray™ unit may come either already skid-mounted or the equipment shipped loose. If shipped loose, locate the equipment as required and firmly secure to the floor, base, etc.

Setup Step 2. Install the Blower Piping
If the blower is not already pre-piped on a QED skid, install the blower piping to connect the blower outlet to the air inlet nozzle on the air stripper sump. Refer to **Figure 3** for an example of a blower piping configuration.

Setup Step 3. Level the EZ-Tray™ Unit
Level the EZ-Tray™ unit. This is a critical step in the proper assembly and installation of the equipment. The aeration trays must be level for proper operation.

Setup Step 4. Install Discharge Piping, either gravity-discharge or pump-discharge.

Install the Gravity Discharge Pipe (For Gravity Discharge Units Only)
Refer to the outlet piping drawing in **Figure 4** to assemble the piping kit and vacuum breaker. Customers providing their own gravity discharge piping must ensure that proper water sump levels are maintained during operation. It is essential that the piping be mounted vertically and that it be properly supported. Install outlet piping from the pump's discharge port. Use proper pipe sealant, PVC cement, and proper plumbing practices and techniques as necessary.

Caution: *The vertical height of the piping should not be changed from that provided in the kit unless air stripper conditions have changed dramatically from the originally-specified flows. The piping kit includes flexible couplings to allow easy vertical height adjustment, should it be necessary.*

Install the Pump Discharge Pipe (For Pump Discharge Units Only)
For a unit with a discharge pump that has not come mounted to a QED skid, install the water line from the air stripper sump to the pump inlet. If customer has purchased a QED pump kit, the components will be found in a separate box. Install outlet piping from the pump's discharge port. Use proper pipe sealant, PVC cement, and proper plumbing practices and techniques as necessary.

Prime the pump. Allow the inlet line and pump chamber to fill completely.

Setup Step 5. Install the Sump Drain Valve and the Sight Tube
(if not already installed at the factory). Make sure all fittings and hose clamps are tight and secure.

Setup Step 6. Connect the Water Lines
Connect the process water lines to the inlet and discharge piping. *Firmly support the process water lines to prevent excessive stress on the piping. The piping is not designed to support the weight of the customer's process water lines.*

Use proper pipe sealant, PVC cement, and proper plumbing practices and techniques as necessary.

Setup Step 7. Connect the Tubing Between Pressure Gauges, Pressure Switch(es), and Air Stripper Sump
Connect the air line tubing from the hose barb located on the top of the sight tube to the high pressure ports on both the air pressure gauge and the air pressure switch(es). Keep the low pressure ports open to the atmosphere (remove plugs or caps).

Setup Step 8. Install Air Discharge Stack
Install any necessary extension to the air stripper air discharge stack as necessary.

Caution: *Any added extension should have an inner diameter at least as large as the air stripper stack.*

Connect the stack extension to the exhaust stack using a flexible rubber coupling or other suitable means. Support the extension independently of the air stripper so that it can be easily disconnected if the demister element must be removed for maintenance purposes, and to prevent damage to top of air stripper housing.

Setup Step 9. Wire the Electrical Components
Have a qualified, licensed electrician wire up the electrical components in compliance with local, state, and national codes.

IMPORTANT! *Make sure the safety interlocks are connected properly!*

To avoid damage to the blower and flooding of the equipment with contaminated feed water, install the high water level and low air pressure interlock switches. If the water level in the sump tank rises beyond the maximum level water could flood the blower. This will destroy the blower and void the warranty. The high water level interlock switch will shut off the feed water pump in an emergency situation. The low air pressure interlock switch will shut off the feed water pump in the event of a blower failure. This reduces the risk of having untreated water passing through the air stripper.

If QED is supplying the control panel, refer to the appropriate wiring diagrams.

Setup Step 10. Install Optional Items
Refer to manufacturers' installation instructions for all equipment and properly support all equipment in an appropriate manner. This also applies to the optional air stripper blower silencer which requires support to avoid overstressing the air stripper blower housing.

Please refer to **Figures 1 and 2** at the end of this manual for a general drawing of an E-Z Tray air stripper and its aeration tray. Upon completion of the equipment set-up procedure, mechanical and electrical installation (including float switches, air pressure switches, etc.), proceed as follows:

Startup Step 1. Turn Off Electrical Components Using the Site's Appropriate "Lock-Out" Procedure. Close Drain and Sample Valves.
Check that all electrical components associated with the unit are turned off,and all drain and sample valves are closed.

Startup Step 2. *IMPORTANT!* Fill the Inlet Chambers with Clean Water.
Each downcomer (**see Figures 1 and 2**) must be sealed by having its end immersed in the seal pot water of the tray below it. Failure to do so may create a situation where not enough back pressure is provided upon blower startup, causing the blower motor overload to trip.

Startup Step 3. *IMPORTANT!* Fill the Sump Tank with One Foot of CleanWater.
On initial start-up, the sump tank must be filled with clean water to a height of about one foot. The sump tank can be filled by taking off the front hatch and filling the sump directly or by disconnecting the water inlet piping and using a hose applied through the water inlet connection. The water level should be seen in the sight tube.

Startup Step 4. Power May Now Be Supplied to the System.

Startup Step 5. *IMPORTANT!* Check the Blower Rotation (*IMPORTANT* for proper air stripper operation)
Check the blower rotation by momentarily turning the Hand-Off-Auto (HOA) Switch to the "Hand" position ("bumping" the motor). Verify that the fan turns in the direction of the arrow on the blower casing. If rotation is incorrect:

1. Have a licensed electrician correct the wiring per manufacturer's instructions.

2. Check and correct the rotation of the other motor(s) in the system. *(This is a common oversight and very often is the reason for inadequate blower operation. If the blower is not providing the expected air flow or backpressure, please double-check this step).*

Startup Step 6. Connect A Clean Water Line To The Air Stripper Inlet. Trial-run Air Stripper System Using Clean Feed Water At The Expected Flow Rate.
Start the QED Air Stripper System by closing the Blower Damper and Placing the Appropriate HOA Switches in the "Auto" Position. Carefully open the damper to achieve the desired tray pressure or air flow rate at the anticipated water flow rate for the system.

Blower throttling is not always possible at unattended and/or intermittent operation sites when the system restarts. Our testing shows that the new seal pots maintain seal water for up to 10 minutes once they are filled. If your system frequently shuts down for longer than 10 minutes, or you've experienced water blow off on start-up, we've created plastic insert pans that sit in the seal pots and ensure that the pot will maintain its water seal.

QED's recommendation is to use the pans on systems that operate intermittently and/or systems where an operator is not present on start up to throttle the blower at the beginning until the seal pots have filled. Reference **Figure 2**.

Startup Step 7. Monitor the Trial Run and Adjust the System Accordingly.
The following items should be monitored as water builds up on each tray:

1. Proper sump pressure. This may require 15-30 minutes for the water to reach the proper depth on each tray. Once the blower has reached its operational speed and water flow is steady, the blower can be throttled to adjust air flow to optimal conditions. QED wet-tests every EZ-Tray unit for proper sump pressures at the customer's expected water flow rates for "clean tray" and "fouled tray" conditions. These values are normally printed on a label and affixed to the side of the air stripper. Adjustments should be made first by referring to these wet-test pressure values. If no values are given, refer to the table below. The values are estimates, and vary depending upon the influent water flow rates. The table assumes there is no additional pressure from equipment downstream of the air stack. If down stream equipment adds back pressure, these values may not be accurate.

	Typical Sump Operating Pressures (Approximate*)
1 Tray System	4-6" wc
2 Tray System	8-12" wc
3 Tray System	12-18" wc
4 Tray System	16-24" wc
5 Tray System	20-30" wc
6 Tray System	24-36" wc

IT IS RECOMMENDED THAT A BOOSTER BLOWER BE USED IF IT IS EXPECTED THAT THE COMBINED PRESSURE LOSS OF THE QED AIR STRIPPER AND ANY DOWN STREAM EQUIPMENT EXCEEDS 40" WC.

Be careful when making damper adjustments—fouling of the system over time will affect the air flow rate. A "fouled" system will have lower air flow at the same sump pressure reading than a clean system. A severely fouled air stripper will not produce the minimum air flow the system requires for proper performance. The blower damper should therefore be adjusted to the proper sump pressure after the trays have been properly cleaned. Refer to the "Equipment Maintenance Instructions" for proper cleaning procedures.

2. Check for any leaks and correct.

Note: *If the blower overload trips, the system will shut down. This overload may indicate that the damper needs to be parially* closed. Reset the overload and try to start the system again.

Once **Step 7** is successfully completed, turn HOA switches to "Off" and proceed to **Step 8**.

Startup Step 8. Replace the Clean Water Feed Line with the Contaminated or Process Feed Line.
Install the inlet piping according to proper plumbing practices. Use proper pipe sealant and PVC cement where necessary.

Startup Step 9. Initiate Full Operation.
Switch all air stripper system HOA switches to “Auto”.

Please Note: The blower damper should now already be in its proper position to provide the desired air flow for the system’s anticipated influent water flow rate; however, the air flow through the air stripper upon initiating “full operation” will be greater until water builds up on the trays. If this increased air flow is a concern, it is advised to close the damper slightly to throttle the air flow until the water has built up to its final height on each tray.

Startup Step 10. Inspect and Record Unit's Operation Data
Inspect the unit's operation at regular intervals and take pertinent instrument readings. Record readings and performance data in an operations log book.

Startup Step 11. Set the Throttle Valve on Discharge Pump
Units with a discharge pump are supplied with a throttle valve. The valve should be set so that the pump matches the influent flow rate without cavitation and draws no more than the rated full load amps stamped on the pump motor.

System Shutdown Procedure

Shutdown Step 1. Shut Water Off
Shut off the water feed to the system.

Shutdown Step 2. Wait 5 Minutes Before Blower Shut Off
Wait 5 minutes to allow the water in the aeration trays to be completely treated, then shut off the blower.

Shutdown Step 3. Shut Power Off
Shut off power at the main disconnected switch if more than a temporary shutdown is anticipated.

Caution: *If proper shutdown procedures are not followed contaminated water will drain into the sump and contaminate the water that has collected in the sump. Allow the blower to run the additional 5 minutes after the feed water is shut off.*

This information describes how to clean the QED EZ-Tray™ Air Stripper unit. Please refer to the manufacturer's instructions for maintenance on the non-air stripper equipment.

Tray Fouling
With normal operation of the air stripper, the sump pressure will typically increase over time. This typically indicates that the air stripper trays are becoming fouled. If this occurs, shut down the system. Remove the door and visually inspect for signs of fouling and clean the air stripper as outlined in the "Maintenance" section of this manual. Occasionally inspect the pressure gauge tubing for water build up. Water trapped in the air tubing could produce an erroneous reading. A pinch clamp is provided on the tubing and should be closed when no one is at the site in order to prevent potential condensate accumulation. Condensation buildup will ruin the pressure gauge.

Dealing with High Mineral Concentrations
Minerals, dissolved in high concentrations, tend to precipitate out of ground water during aeration processes. These minerals form insoluble deposits commonly referred to as "fouling". Deposits from iron-rich or mineral-rich feed water can be reduced by pre-treating it with sequestering agents or possibly other types of technologies. There are a number of sequestering suppliers that should be able to offer recommendations or suggestions. The recommended cleaning procedure is pressure-washing. Follow the instructions detailed below.

Cleaning the Air Stripper

Recommended cleaning equipment:

Pressure Washer with Washer Wand
2 GPM minimum flow at 900 PSI maximum. Equipment rental companies can usually supply such a unit on a daily rental basis.

Clean Water Supply
Clean water supply with a capacity of at least 2 GPM at 20 PSI, connected to the pressure washer by means of an ordinary garden hose.

Cleaning the Unit.
The QED air stripper is designed for easy cleaning. Trays can either be removed for cleaning or left in the unit and cleaned. Another option would be for the customer to purchase a spare set of trays which would allow maintenance personnel to replace the fouled trays with clean trays and reduce air stripper down time and allow the maintenance personnel to clean the trays at their convenience.

Cleaning Step 1. Turn Off Equipment, Perform Electrical "Lockout"Procedure
Turn off the feed water supply and all associated electrical equipment.

Cleaning Step 2. Provide for Waste Disposal
Make provisions for disposing of the sludge and waste generated during cleaning.

Cleaning Step 3. Remove Front Cover(s). Either remove the traysfrom the air stripper unit or leave them in for cleaning.

Cleaning Step 4. Turn On Water and Pressure Washer
Turn on the water supply to the pressure washer. Then, turn on the pressure washer itself. Wear protective goggles while spraying.

Cleaning Step 5. Insert Wand into Air Stripper
(This step is for cleaning trays while they remain in the air stripper unit. If trays have been removed for cleaning, skip step 5 and proceed to step 6.)

Insert the wand all the way into the door opening. Point the spray nozzle up towards the bottom of the lowest tray.

Cleaning Step 6. Clean Bottom Side of Tray
Holding the wand tightly, pull the trigger to start the pressurized water flow. Expect the wand to kick back as flow starts. Move the wand side to side at a rate of about 1" per second. Be sure to cover the entire tray bottom area. The tray holes must be cleaned of all deposits. Periodically stop the cleaning operation and inspect the cleaned area. The area is clean when there are no deposits around the aeration holes.

Cleaning Step 7. Clean Top Side of Tray
Move the wand to the top side of the tray. Continue spraying with the nozzle pointed down onto the top surface of the tray. Also clean the downcomer and sealpot areas. Remove all visible deposits from the tray baffles and the walls of the unit. Inspect the cleaned area for deposits.

Cleaning Step 8. Repeat for all Trays
Repeat the procedure for all trays, working up to the top-most tray.

Cleaning Step 9. Spray the Ceiling and Walls of the Air Stripper.
Cleaning the walls and ceiling are not necessarily required for proper air stripper operation.

Cleaning Step 10. Rinse
After the cleaning operation is finished, rinse the ceiling, trays, baffles,and walls with the pressure washer. Work down from the top down to the sump tank. Make sure the surfaces are clean and the holes are not blocked by loosened debris.

Cleaning Step 11. Check the Demister Pad and Replace as Necessary
Inspect the demister pad and clean as needed. Use the pressure sprayer to remove debris, deposits and gummy residues sometimes found on the demister pad. Demister pads that are excessively plugged should be replaced.

Cleaning Step 12. Inspect the Air Stripper
Visually inspect the air stripper box for the following:

1. Gasket integrity
2. Inspect the air stripper for any damage and repair as necessary.
3. Aeration tray integrity. Inspect trays for structural damage.
4. Inspect the internal piping (typically PVC piping) and replace as necessary.

Problem 1. Blower Won't Start or Run

No Power to Blower
Check that all switches are in "ON" or "AUTO" position.

Position main disconnect switch to "ON" position. Turn control switches to"ON" or "AUTO".

Blown Fuse
Check to see if fuses are okay. Check fuses in main disconnect switch and in control panel.

If blown, replace with fuse of same size and rating.

Overload Relay Trips
Locate reset button on blower overload relay. Push reset button in. Reasons for tripping: incorrect line voltage, motor wired incorrectly, loose wire connections, inadequate ventilation, bearings are bad.

Tubing to Pressure Switch Plugged with Water or Debris
Remove tubing from pressure switch and blow into it towards tank.

Clean or replace tubing if plugged or kinked.

Blower Wheel Jammed Against Side of Housing
TURN OFF ALL power to the system. Try to spin wheel by hand. Wheel should rotate freely. See blower manual for more details. Call QED.

Problem 2. Discharge Pump Won't Shut Off

Suction or Discharge Piping for Pump is Clogged
Check water flow from discharge pipe. Piping should be clean inside. Look for narrowing caused by scale or iron accumulation.

Remove piping, inspect and clean or replace as necessary.

Float Switch in Tank is Stuck in Down Position
Look into sump and check that all floats are free moving and floating on the water.

Clean all deposits from float. Replace float as necessary.

Normal Operation - Water Level in Sump is Okay
Pump will stop when water level reaches pre-determined height in tank (low level).

Allow water level to decrease until pump turns off.
Let water level reach pre-determined lower level, which will cause discharge pump to turn off.

Problem 3. Discharge Pump Won't Start or Run

No Power to Pump
Check that all switches are in "ON" or "AUTO" position.

Position main disconnect switch to "ON" position. Turn control switches to "ON" or "AUTO".

Blown Fuse
Check to see if fuses are okay. Check fuses in main disconnect switch and in control panel.

If blown, replace with fuse of same size and rating.

Overload Relay Trips
Locate reset button on pump contactor overload relay.

Push reset button in. Reasons for tripping: incorrect line voltage, motor wired incorrectly, inadequate ventilation, obstruction in piping, bearings are bad.

Normal Operation - Water Level in Sump is Okay
Pump will start when water level reaches pre-determined height in tank.

Allow water level to increase until pump turns on. Be sure pump switch is in "Auto" position.

Let water level reach pre-determined upper level, which will cause discharge pump to turn on.

Level Switch in Tank is Wired Incorrectly in Control Panel
Check wiring circuit against diagram. See that all connections are tight and no short circuits exist because of worn insulation, crossed wires, etc.

Rewire any incorrect circuits. Tighten connections, replace defective wires.

Impeller, Seal or Bearing Damaged
TURN OFF POWER. Try to turn impeller by hand.

If impeller won't turn, remove housing and locate source of binding, or obstruction.

Problem 4. Low Air Pressure in Stripper Tank

Blower Damper Closed
Visually check position of damper near discharge of blower.

Open damper to get proper reading on pressure gauge. Firmly tighten screws.

Motor Rotation Backwards
Watch rotation of blower wheel at slow speed.

Reconnect for proper rotation as per motor diagram.

Gravity Discharge Trap Installed Incorrectly
Tray should be positioned vertically.

Install discharge trap per outlet plumbing drawings provided in **Figure 4**.

Inlet Chamber (Sealpot) in each Tray is Not Full of Water
Follow inlet chambers fill up procedures above in Initial Start Up.

Front Cover not in Place
Front cover must be secured during operation.

Tubing to Pressure Gauge Plugged with Water or Debris
Remove tubing from pressure gauge and blow into it towards tank.

Clean or replace tubing if plugged or kinked.

Debris Blocking Blower Intake
Look at blower intake. Remove any accumulated debris.

Normal Operation in Automatic Mode
When inlet pump starts, blowers will start, air pressure will rise to operational level.

No action necessary.

Problem 5. High Pressure in Stripper

Air Exhaust Piping is Restricted
Check vent piping for obstructions. Check that vent pipe diameter does not decrease.

Vent piping diameter must be the same as the outlet vent diameter on the cover.

Air Holes in Bottom of Trays are Plugged
Remove front cover and visually inspect holes.

For iron fouling, clean out unit with a 1000 PSI pressure washer. For scaling, scrape or tap scale from all surfaces, then use a pressure washer to open holes. Consider using sequestering agent or other technology to reduce scaling.

Demister Pad is Plugged
Inspect the bottom of the demister pad in the cover. Clean and/or replace as necessary.

Problem 6. Water Won't Flow Into Unit

Inlet/Well Pump Functioning Properly
Allow water level to rise in well pump, which will turn on inlet pump to system.

No action necessary.

Tank Air Pressure is Low. System is in Alarm Condition
Read tank air pressure from pressure gauge. System should be in alarm condition if pressure is below about 2 inches w.c.

Check that blower is operating properly.

Inlet Piping is Plugged
Remove inlet piping and inspect for debris and buildup.

Clean or replace clogged parts.

Problem 7. Iron Fouling is a Problem

Iron Precipitates Out of Water When Treated with an Air Stripper Causing Iron Build Up in Unit
Remove the front door(s) and inspect inside of tray for buildup/fouling.

Clean out unit with 1000 PSI pressure washer on routine basis.

Pretreat incoming water using sequestering agents or other appropriate technology.

Treatment Equipment Warranty

QED Environmental Systems Inc. (QED) warrants to the original purchaser of its products that, subject to the limitations and conditions provided below, the products, materials and/or workmanship shall reasonably conform to descriptions of the products and shall be free of defects in materials and workmanship. Any failure of the products to conform to this warranty will be remedied by QED in the manner provided herein.

QED warrants the equipment components of its manufacture for a period of one (1) year from date of delivery. Our sole obligation during this warranty will be to repair or replace (at our option) the defective components. We are not responsible for consequential damages. Labor costs are not included.

Purchaser's exclusive remedy for breach of said warranty shall be as follows: if, and only if, QED is notified in writing within the applicable warranty period of the existence of any such defects in the said products, and QED upon examination of any such defects, shall find the same to be within the term of and covered by the warranty running from QED to Purchaser, QED will, at its option, as soon as reasonably possible, replace or repair any such product, without charge to Purchaser. If QED for any reason, cannot repair a product covered hereby within four (4) weeks after receipt of the original Purchaser's notification of a warranty claim, then QED's sole responsibility shall be, at its option, either to replace the defective product with a comparable new unit at no charge to the Purchaser, or to refund the full purchase price. In no event shall such allegedly defective products be returned to QED without its consent, and QED's obligations of repair, replacement or refund are conditioned upon the Purchaser's return of the defective product to QED.

IN NO EVENT SHALL QED ENVIRONMENTAL SYSTEMS INC. BE LIABLE FOR CONSEQUENTIAL OR INCIDENTAL DAMAGES FOR BREACH OF SAID WARRANTY.

The foregoing warranty does not apply to major subassemblies and other equipment, accessories, and other parts manufactured by others, and such other parts, accessories, and equipment are subject only to the warranties supplied by their respective manufacturers. In the event of failure of any such product or accessory, QED will give assistance to Purchaser in obtaining from the respective manufacturer whatever adjustment is reasonable in light of the manufacturer's own warranty.

THE FOREGOING WARRANTY IS IN LIEU OF ALL OTHER WARRANTIES, EXPRESSED, IMPLIED OR STATUTORY (INCLUDING BUT NOT LIMITED TO THE WARRANTIES OF MERCHANT ABILITY AND FITNESS FOR A PARTICULAR PURPOSE), WHICH OTHER WARRANTIES ARE EXPRESSLY EXCLUDED HEREBY, and of any other obligations or liabilities on the part of QED, and QED neither assumes nor authorizes any person to assume for it any other obligation or liability in connection with said products, materials and/or workmanship.

It is understood and agreed that QED shall in no event be liable for incidental or consequential damages resulting from its breach of any of the terms of this agreement, nor for special damages, nor for improper selection of any product described or referred to for a particular application.

This warranty will be void in the event of unauthorized disassembly of component assemblies. Defects in any equipment that result from abuse, operation in any manner outside the recommended procedures, use and applications other than for intended use, or exposure to chemical or physical environment beyond the designated limits of materials and construction will also void this warranty.

Treatment Equipment Warranty

The equipment is warranted to perform as specified under the conditions specified here and within the air stripper model or QED will make the necessary changes at no cost to the owner. Some restrictions apply. Requirements for warranty consideration include, (but are not limited to):

1. Current operating conditions do not differ from the previously-modeled conditions.
2. The system should be cleaned regularly to maintain system performance.
3. The equipment is installed, operated and maintained according to QED's instruction or non-QED manufactured subassembly manufacturer's instructions.
4. Air stripper influent air is not "dirty" (does not contain VOC's, etc.).
5. No surfactants, oils, greases, immiscible phases or other Henry's constant altering water additions present in the water.
6. Each influent contaminant does not exceed 25% of its maximum solubility under modeled conditions.

QED shall be released from all obligations under all warranties if any product covered hereby is repaired or modified by persons other than QED's service personnel unless such repair by others is made with the consent of QED. If any product covered hereby is actually defective within the terms of this warranty, Purchaser must contact QED for determination of warranty coverage. If the return of a component is determined to be necessary, QED will authorize the return of the component, at owner's expense. If the product proves not to be defective within the terms of this warranty, then all costs and expenses in connection with the processing of the Purchaser's claim and all costs for repair, parts and labor as authorized by owner hereunder shall be borne by the Purchaser.

In the event of air stripper performance issues, QED may require customer to conduct a variety of troubleshooting steps. These include, but are not limited to, modifying operational parameters, cleaning air stripper system, modifying (temporarily or permanently) process piping, and obtaining reasonable and necessary influent/effluent samples. These steps are the responsibility of the customer and will be conducted by customer prior to consideration by QED for a site visit. These steps and the associated costs incurred are the responsibility of the customer, regardless of future action. Should customer request a site visit by QED or accept a site visit offer by a QED-trained technician, the visit and associated costs: a) will be the responsibility of the customer at $750/day, plus travel, lodging, and meals, if the visit finds improper sampling, process piping installation, or equipment operation inconsistent with QED's Operation and Maintenance Manual; or b) will be the responsibility of QED if the visit finds QED responsible for the performance issue(s) raised.

The original Purchaser's sole responsibility in the instance of a warranty claim shall be to notify QED of the defect, malfunction, or other manner in which the terms of this warranty are believed to be violated. You may secure performance of obligations hereunder by contacting the Customer Service Department of QED and:

1. Identify the product or system involved by job number or QED order number.
2. Specifying where, when, and from whom the product was purchased.
3. Describing the nature of the defect or malfunction covered by this warranty.
4. If applicable, send the malfunctioning component, after receiving a Return Authorization Code (RAC) Number from the QED Service Department, to:

QED Environmental Systems Inc.
6241 Jackson Road
Ann Arbor, MI 48103
Attn: RAC Number
(RAC provided by QED Service Dept.)

Figure 1 General Drawing of E-Z Tray Air Stripper

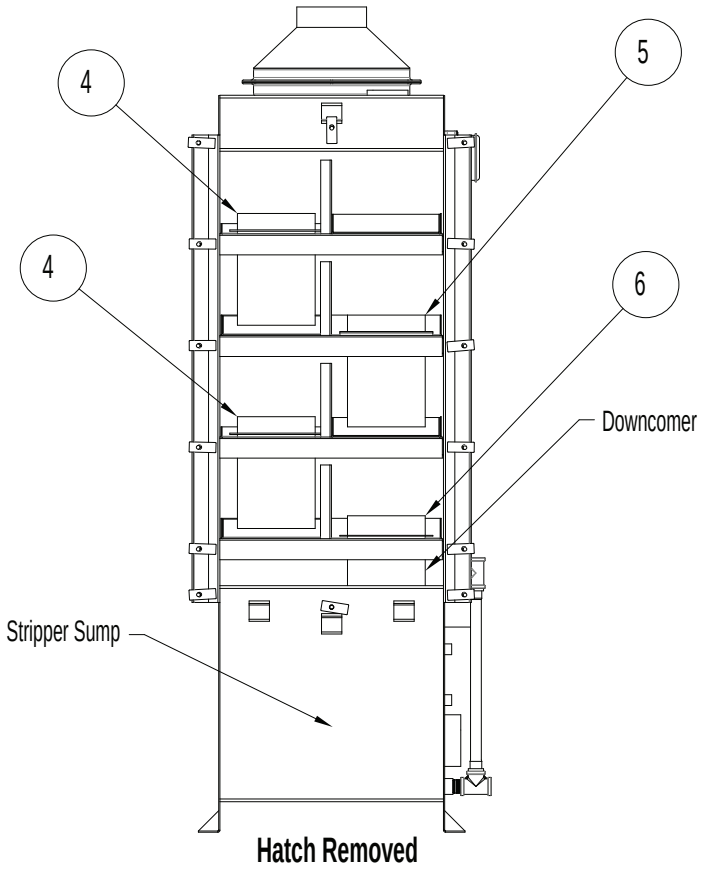

ITEM NO.	Description	QTY.
1	EZ TRAY AIR STRIPPER	1
2	DEMISTER HOUSING	1
3	SIGHT TUBE	1
4	TRAY L.H.	2
5	TRAY R.H.	1
6	TRAY R.H. BOTTOM	1
7	GAUGE MAGNEHELIC	1

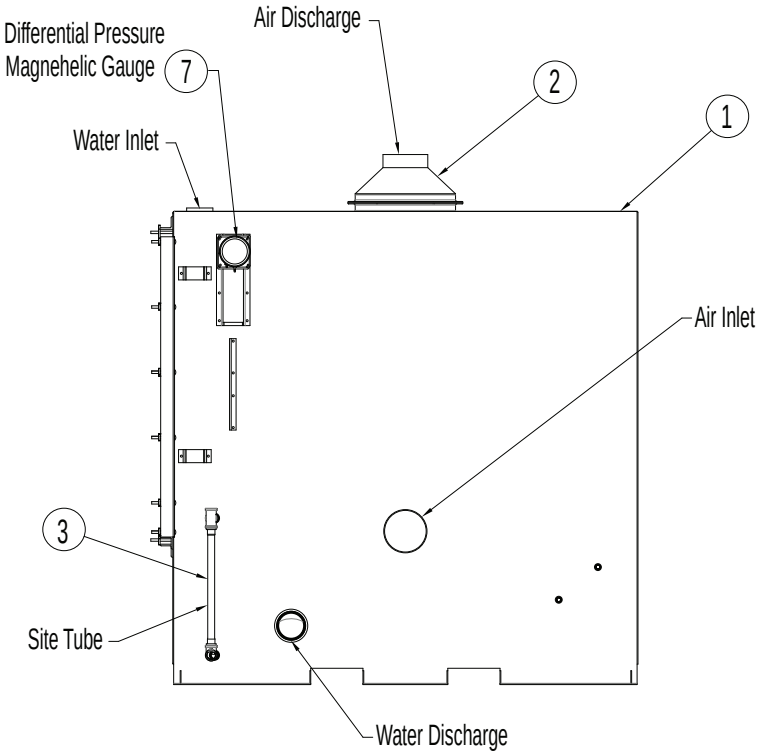

Figure 2 Typical Tray Assembly

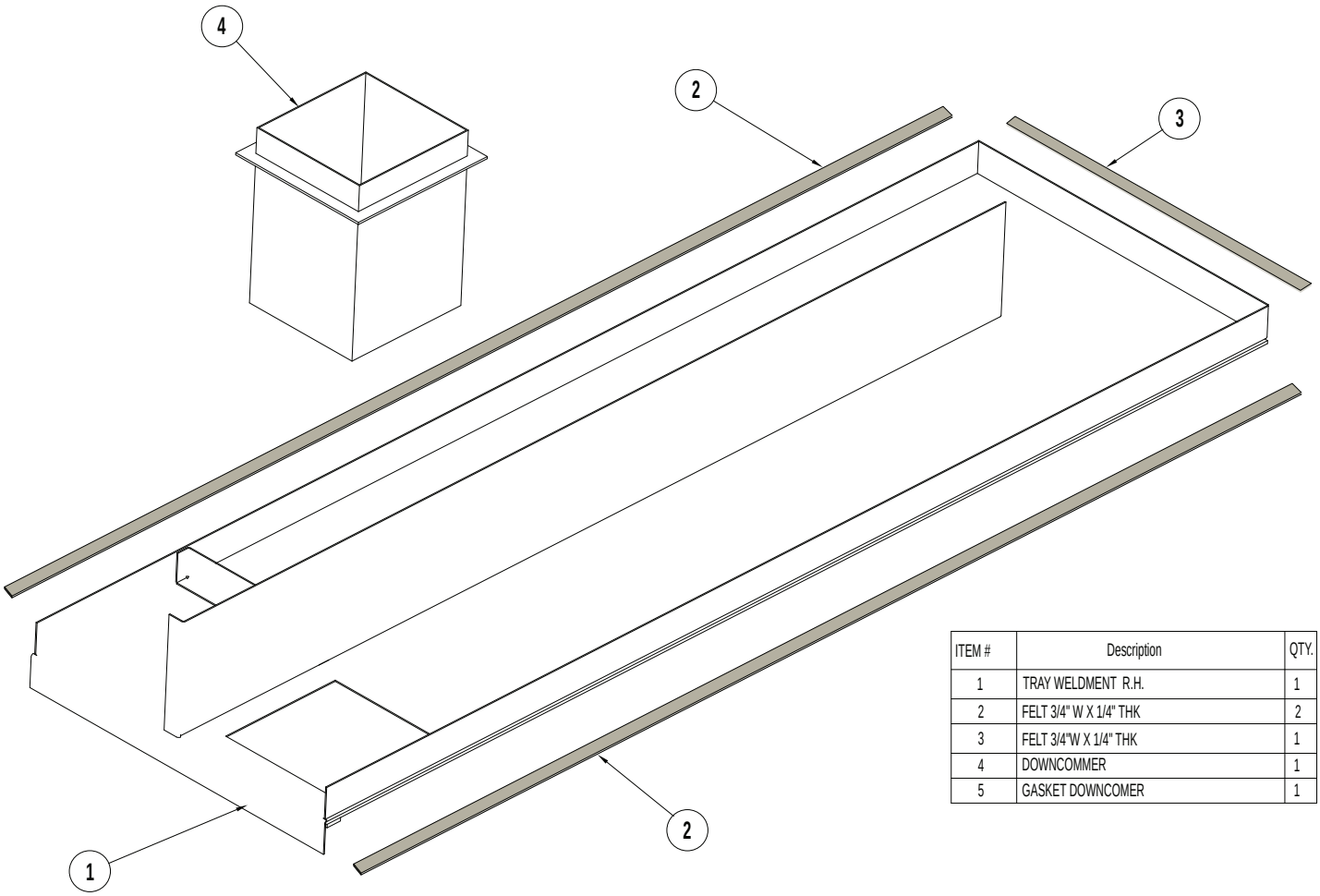

ITEM #	Description	QTY.
1	TRAY WELDMENT R.H.	1
2	FELT 3/4" W X 1/4" THK	2
3	FELT 3/4"W X 1/4" THK	1
4	DOWNCOMMER	1
5	GASKET DOWNCOMER	1

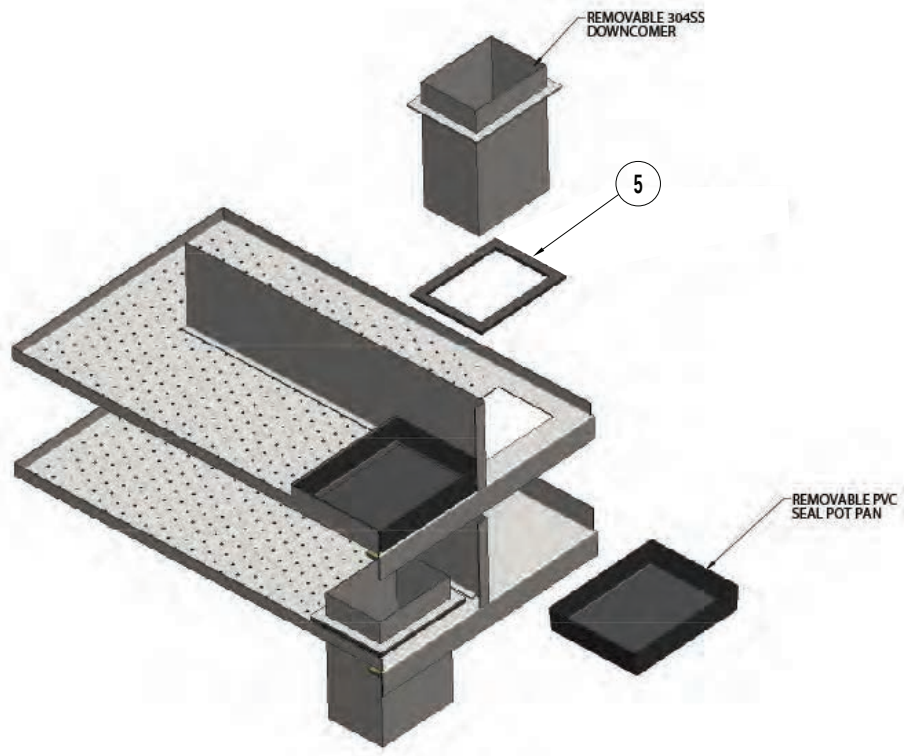

Figure 3 Typical Blower Piping

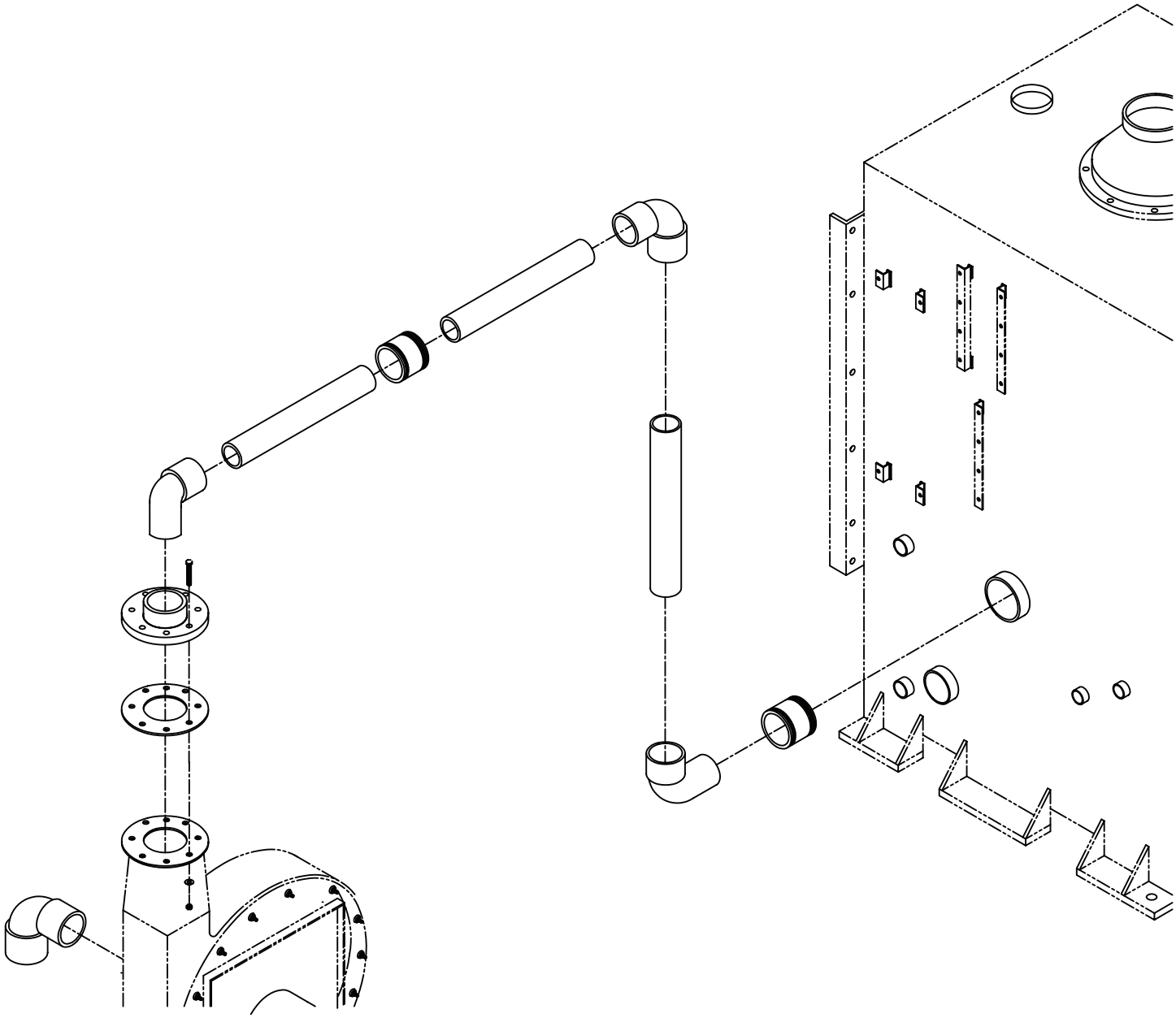

Figure 4 Typical Gravity Discharge Piping

NOTE:

1. CENTER LINE OF WATER OUT (ITEM 1) TO CENTER LINE OF DRAIN CONNECTOR (ITEM 9) TO BE 27" – 6 TRAY
   18" – 4 TRAY

(DIMENSIONS ARE APPROXIMATE––REQUIRES SOME ADJUSTMENT AS NECESSARY BASED UPON SUMP PRESSURES AND WATER FLOWS. ASSUMES STANDARD OPERATING CONDITIONS.)

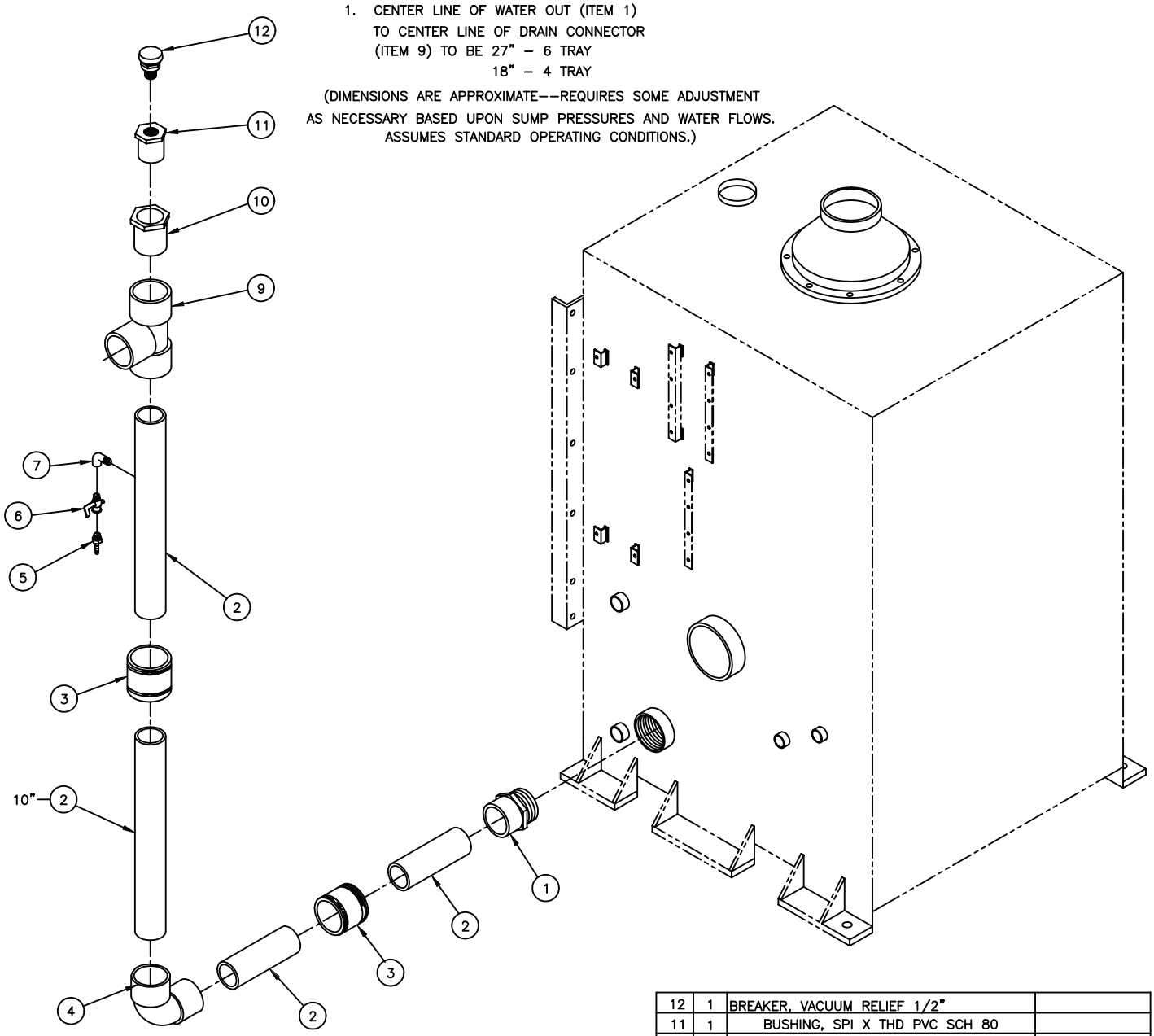

ITEM	QTY	DESCRIPTION	PART #
12	1	BREAKER, VACUUM RELIEF 1/2"	
11	1	BUSHING, SPI X THD PVC SCH 80	
10	1	BUSHING, REDUCER SPI. X SOC.	
9	1	TEE, SOCKET PVC SCH 80	
8			
7	1	ELBOW, STREET 1/8" FPT BRASS	
6	1	COCK, SHUTOFF 1/8"MPT X 1/8"FPT BRASS	
5	1	BARB, 1/8"MPT X 3/16" BARB	
4	1	ELBOW, 90 DEGREE PVC SCH 80 SOCKET	
3	2	FERNCO, FLEXIBLE PVC	
2	TBD	PIPE, PVC SCH 80	
1	1	ADAPTER, PVC SCH 80	

UNLESS OTHERWISE SPECIFIED, DIMENSIONS ARE IN INCHES AND INCLUDE PLATING REMOVE ALL BURRS	DRAWN BY MEB	DATE 10/29/99	QED ENVIRONMENTAL SYSTEMS INC. 6155 JACKSON ROAD, ANN ARBOR, MI.
	CHECKED BY	DATE	
TOLERANCES .XX+/–.01 FRACT +/–1/64 .XXX+/–.005 ANGLES+/–1/2 OTHER TOLERANCES AS SPECIFIED	APPROVED BY	DATE	TITLE GRAVITY DRAIN ASSEMBLY/BOM/KIT
	MFG. APPROVAL		
EZ–TRAY (24.X)	MATERIAL		DRAWING NUMBER eztgravdis REV
NEXT ASS'Y / USED ON	FINISH		SCALE N.T.S. SHEET 1 OF 1

nyb | The New York Blower Company®
7660 QUINCY STREET—WILLOWBROOK, ILLINOIS 60527-5530
TEL: [630] 794-5700 • FAX: [630] 794-5776 • WEB: http://www.nyb.com • E-MAIL: nyb@nyb.com

INSTALLATION, MAINTENANCE, OPERATING INSTRUCTIONS

IM-140

PRESSURE BLOWERS
TYPE HP PRESSURE BLOWERS

⚠ WARNING

THIS FAN HAS MOVING PARTS THAT CAN CAUSE SERIOUS BODILY INJURY. BEFORE OPERATING OR STARTING MAINTENANCE READ THE INSTALLATION AND MAINTENANCE INSTRUCTIONS AND THE AMCA SAFETY PRACTICES MANUAL PROVIDED WITH THIS FAN.

DURING OPERATION

1. KEEP BODY, HANDS, AND FOREIGN OBJECTS AWAY FROM THE INLET, THE OUTLET, AND THE OTHER MOVING PARTS OF THE FAN SUCH AS SHAFTS, BELTS, AND PULLEYS.

2. DO NOT OPERATE AT EXCESSIVE SPEEDS OR TEMPERATURES.

BEFORE STARTING MAINTENANCE WORK:

LOCK POWER SUPPLY IN OFF POSITION AND IMMOBILIZE FAN WHEEL.

98-0250

A WORD ABOUT SAFETY

The above **WARNING** decal appears on all **nyb** fans. Air moving equipment involves electrical wiring, moving parts, sound, and air velocity or pressure which can create safety hazards if the equipment is not properly installed, operated and maintained. To minimize this danger, follow these instructions as well as the additional instructions and warnings on the equipment itself.

All installers, operators and maintenance personnel should study AMCA Publication 410, "Recommended Safety Practices for Air Moving Devices", which is included as part of every shipment. Additional copies can be obtained by writing to New York Blower Company, 7660 Quincy St., Willowbrook, IL 60527.

ELECTRICAL DISCONNECTS

Every motor driven fan should have an independent disconnect switch to isolate the unit from the electrical supply. It should be near the fan and must be capable of being locked by maintenance personnel while servicing the unit, in accordance with OSHA procedures.

MOVING PARTS

All moving parts must have guards to protect personnel. Safety requirements vary, so the number and type of guards needed to meet company, local and OSHA standards must be determined and specified by the user. Never start a fan without having all safety guards installed. Check regularly for damaged or missing guards and do not operate any fan with guards removed. Fans can also become dangerous because of potential “windmilling”, even though all electrical power is disconnected. Always block the rotating assembly before working on any moving parts.

SOUND

Some fans can generate sound that could be hazardous to exposed personnel. It is the responsibility of the system designer and user to determine sound levels of the system, the degree of personnel exposure, and to comply with applicable safety requirements to protect personnel from excessive noise. Consult **nyb** for fan sound power level ratings.

AIR PRESSURE AND SUCTION

In addition to the normal dangers of rotating machinery, fans present another hazard from the suction created at the fan inlet. This suction can draw materials into the fan where they become high velocity projectiles at the outlet. It can also be extremely dangerous to persons in close proximity to the inlet, as the forces involved can overcome the strength of most individuals. Inlets and outlets that are not ducted should be screened to prevent entry and discharge of solid objects.

⚠ DANGER

DO NOT OPEN UNTIL THE POWER SUPPLY HAS BEEN LOCKED OFF AND THE SHAFT HAS STOPPED ROTATING.
FAILURE TO DO THIS CAN RESULT IN SERIOUS BODILY INJURY.

98-0249

ACCESS DOORS

The above DANGER decal is placed on all **nyb** cleanout doors. These doors, as well as access doors to the duct system, should never be opened while the fan is in operation. Serious injury could result from the effects of air pressure or suction.

Bolted doors must have the door nuts or fasteners securely tightened to prevent accidental or unauthorized opening.

RECEIVING AND INSPECTION

The fan and accessories should be inspected on receipt for any shipping damage. Turn the wheel by hand to see that it rotates freely and does not bind. If dampers or shutters are provided, check these accessories for free operation of all moving parts.

F.O.B. factory shipping terms require that the receiver be responsible for inspecting the equipment upon arrival. Note damage or shortages on the Bill of Lading and file any claims for damage or loss in transit. **nyb** will assist the customer as much as possible; however, claims must be originated at the point of delivery.

HANDLING AND STORAGE

Fans should be lifted by the base, mounting supports, or lifting eyes only. Never lift a fan by the wheel, shaft, motor, motor bracket, housing inlet, outlet, or any fan part not designed for lifting. A spreader should always be used to avoid damage.

On a direct drive Arrangement 8 fan, lifting holes are provided in the motor base to assist in handling the fan assembly. These lifting holes should be used in conjunction with the lifting eyes when lifting and positioning the fan onto its foundation. A heavy round steel bar or appropriate fixture can be passed through the lifting holes to simplify attachment of the lifting device. Be sure to follow all local safety codes when moving heavy equipment.

Whenever possible, fans and accessories should be stored in a clean, dry location to prevent rust and corrosion of steel components. If outdoor storage is necessary, protection should be provided. Cover the inlet and outlet to prevent the accumulation of dirt and moisture in the housing. Cover motors with waterproof material. Refer to the bearing section for further storage instructions.

Check shutters for free operation and lubricate moving parts prior to storage. Inspect the stored unit periodically. **Rotate the wheel by hand every two weeks to redistribute grease on internal bearing parts.**

FAN INSTALLATION

nyb wheels are dynamically balanced when fabricated. Complete assembled fans are test run at operating speeds to check the entire assembly for conformance to **nyb** vibration limits. Nevertheless, all units must be adequately supported for smooth operation. **Ductwork or stacks should be independently supported as excess weight may distort the fan housing and cause contact between moving parts.** Where vibration isolators are used, consult the **nyb** certified drawing for proper location and adjustment.

Slab-Mounted Units

A correctly designed and level concrete foundation provides the best means of installing floor-mounted fans. The mass of the base must maintain the fan/driver alignment, absorb normal vibration, and resist lateral loads. The overall dimensions of the concrete base should extend at least six inches beyond the base of the fan. The weight of the slab should be two to three times the weight of the rotating assembly, including the motor. The foundation requires firmly anchored fasteners such as the anchor bolts shown in Figure 1.

Move the fan to the mounting location and lower it over the anchor bolts, leveling the fan with shims around the bolts. Fasten the fan securely. When grout is used, shim the fan at least 3/4-inch from the concrete base. (See Figure 1.) When isolation is used, check the **nyb** certified drawing for installation instructions.

Elevated Units

When an elevated or suspended structural steel platform is used, it must have sufficient bracing to support the unit load and prevent side sway. The platform should be of welded construction to maintain permanent alignment of all members.

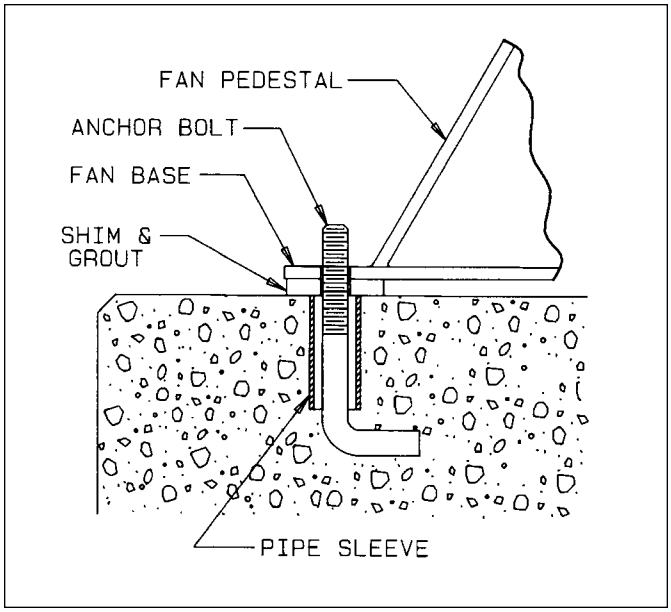

Figure 1

V-BELT DRIVE

Installation

1. Remove all foreign material from the fan and motor shafts. Coat shafts with machine oil for easier mounting. Mount the belt guard backplate at this time if partial installation is required prior to sheave mounting.
2. Mount sheaves on shafts after checking sheave bores and bushings for nicks or burrs. Avoid using force. If resistance is encountered, lightly polish the shaft with emery cloth until the sheave slides on freely. Tighten tapered bushing bolts sequentially so that equal torque is applied to each.
3. Adjust the motor on its base to a position closest to the fan shaft. Install belts by working each one over the sheave grooves until all are in position. Never pry the belts into place. On **nyb** packaged fans, sufficient motor adjustment is provided for easy installation of the proper size belts.
4. Adjust sheaves and the motor shaft angle so that the sheave faces are in the same plane. Check this by placing a straightedge across the face of the sheaves. Any gap between the edge and sheave faces indicates misalignment. Important: This method is only valid when the width of the surface between the belt edge and the sheave face is the same for both sheaves. When they are not equal, or when using adjustable-pitch sheaves, adjust so that all belts have approximately equal tension. Both shafts should be at the right angles to the center belt.

Belt Tensioning

1. Check belt tension with a tensioning gage and adjust using the motor slide base. Excess tension shortens bearing life while insufficient tension shortens belt life, can reduce fan performance and may cause vibration. The lowest allowable tension is that which prevents slippage under full load. Belts may slip during start-up, but slipping should stop as soon as the fan reaches full speed. For more precise tensioning methods, consult the drive manufacturer's literature.
2. Recheck setscrews, rotate the drive by hand and check for rubbing, then complete the installation of the belt guard.

3. Belts tend to stretch somewhat after installation. Recheck tension after several days of operation. Check sheave alignment as well as setscrew and/or bushing bolt tightness.

COUPLING

Coupling alignment should be checked after installation and prior to start up. Alignment is set at the factory, but shipping, handling, and installation can cause misalignment. Also check for proper coupling lubrication. For details on lubrication and for alignment tolerances on the particular coupling supplied, see the manufacturer's installation and maintenance supplement in the shipping envelope.

Installation

Most **nyb** fans are shipped with the coupling installed. In cases where the drive is assembled after shipping, install the coupling as follows:

1. Remove all foreign material from fan and motor shafts and coat with machine oil for easy mounting of coupling halves.
2. Mount the coupling halves on each shaft, setting the gap between the faces specified by the manufacturer. Avoid using force. If mounting difficulty is encountered, lightly polish the shaft with emery cloth until the halves slide on freely.

Alignment

1. Align the coupling to within the manufacturer's limits for parallel and angular misalignment (see Figure 2). A dial indicator or laser can also be used for alignment where greater precision is desired. Adjustments should be made by moving the motor to change shaft angle, and by the use of foot shims to change motor shaft height. Do not move the fan shaft or bearing.
2. When correctly aligned, install the flexible element and tighten all fasteners in the coupling and motor base. Lubricate the coupling if necessary.
3. Recheck alignment and gap after a short period of operation, and recheck the tightness of all fasteners in the coupling assembly.

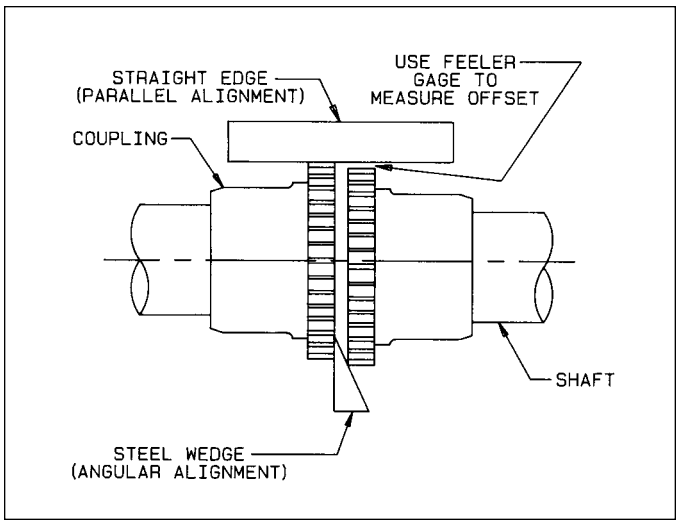

Figure 2

START-UP

Safe operation and maintenance includes the selection and use of appropriate safety accessories for the specific installation. This is the responsibility of the system designer and requires consideration of equipment location and accessibility as well as adjacent components. All safety accessories must be installed properly prior to start-up.

Safe operating speed is a function of system temperature and wheel design. Do not under any circumstances exceed the maximum safe fan speed published in the **nyb** engineering supplement, which is available from your **nyb** field sales representative.

⚠ CAUTION

BEFORE INITIAL OPERATION:

1. **TIGHTEN ALL SET SCREWS IN FAN WHEEL.**
2. **TIGHTEN ALL SET SCREWS IN BEARINGS.**
3. **REPEAT AFTER 8 HOURS OF OPERATION.**
4. **REPEAT AGAIN AFTER TWO WEEKS OPERATION.**

98-0271

Procedure

1. If the drive components are not supplied by **nyb**, verify with the manufacturer that the starting torque is adequate for the speed and inertia of the fan.
2. Inspect the installation prior to starting the fan. Check for any loose items or debris that could be drawn into the fan or dislodged by the fan discharge. Check the interior of the fan as well. Turn the wheel by hand to check for binding.
3. Check drive installation and belt tension.
4. Check the tightness of all setscrews, nuts and bolts. When furnished, tighten hub setscrews with the wheel oriented so that the setscrew is positioned underneath the shaft.
5. Install all remaining safety devices and guards. Verify that the supply voltage is correct and wire the motor. “Bump” the starter to check for proper wheel rotation.
6. Use extreme caution when testing the fan with ducting disconnected. Apply power and check for unusual sounds or excessive vibration. If either exists, see the section on Common Fan Problems. To avoid motor overload, do not run the fan for more than a few seconds if ductwork is not fully installed. On larger fans, normal operating speed may not be obtained without motor overload unless ductwork is attached. Check for correct fan speed and complete installation. Ductwork and guards must be fully installed for safety.
7. Setscrews should be rechecked after a few minutes, eight hours and two weeks of operation (see Tables 1 & 2 for correct tightening torques).

NOTE: Shut the fan down immediately if there is any sudden increase in fan vibration.

Table 1 - WHEEL SETSCREW TORQUES

Setscrew Size Diameter (in.)	Carbon Steel Setscrew Torque*	
	lb.-in.	lb.-ft.
1/2	600	50
5/8	--	97
3/4	--	168

*** Stainless Steel setscrews are not hardened and should not be tightened to more than 1/2 the values shown.**

Table 2 - BEARING SETSCREW TORQUE, lb.-in.

Setscrew Diameter	Manufacturer				
	Link-Belt	Sealmaster	SKF	McGill	Dodge
1/4	90	65	50	85	--
5/16	185	125	165	165	160

Note: Split pillow block bearings are fixed to the shaft with tapered sleeves and generally do not have setscrews.

FAN MAINTENANCE

nyb fans are manufactured to high standards with quality materials and components. Proper maintenance will ensure a long and trouble-free service life.

Do not attempt any maintenance on a fan unless the electrical supply has been completely disconnected and locked. In many cases, a fan can windmill despite removal of all electrical power. The rotating assembly should be blocked securely before attempting maintenance of any kind.

The key to good fan maintenance is regular and systematic inspection of all fan parts. Inspection frequency is determined by the severity of the application and local conditions. Strict adherence to an inspection schedule is essential.

Regular fan maintenance should include the following:

1. Check the fan wheel for any wear or corrosion, as either can cause catastrophic failures. Check also for the build-up of material which can cause unbalance resulting in vibration, bearing wear and serious safety hazards. Clean or replace the wheel as required.
2. Check the V-belt drive for proper alignment and tension (see section on V-belt drives). If belts are worn, replace them as a set, matched to within manufacturer's tolerances. Lubricate the coupling of direct-drive units and check for alignment (see section on couplings).
3. Lubricate the bearings, but do not over lubricate (see the bearing section for detailed specifications).
4. Ceramic-felt shaft seals require no maintenance, although worn seals should be replaced. When lip-type shaft seals are provided, lubricate them with "NEVER-SEEZ" or other anti-seize compound.
5. During any routine maintenance, all setscrews and bolts should be checked for tightness. See the table for correct torques.
6. When installing a new wheel, the proper wheel-to-inlet clearance must be maintained (see Figure 3).

WHEEL BALANCE

Airstreams containing particulate or chemicals can cause abrasion or corrosion of the fan parts. This wear is often uneven and can lead to significant wheel unbalance over time. When such wear is discovered, a decision must be made as to whether to rebalance or replace the wheel.

The soundness of all parts should be determined if the original thickness of components is reduced. Be sure there is no hidden structural damage. The airstream components should also be cleaned to remove any build-up of foreign material. Specialized equipment can be used to rebalance a cleaned wheel that is considered structurally sound.

Balance weights should be rigidly attached at a point that will not interfere with the housing nor disrupt airflow. Remember that centrifugal forces can be extremely high at the outer radius of a fan wheel. Welding is the preferred method of balance weight attachment. Be sure to ground the welder directly to the fan wheel. Otherwise, the welding current could pass through the fan bearings and damage them.

WHEEL-INLET CLEARANCE

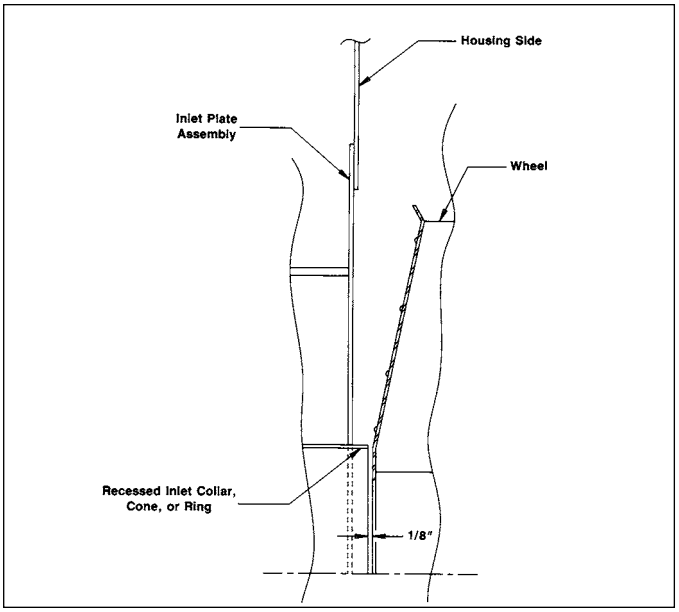

Figure 3

BEARINGS

Storage

Any stored bearing can be damaged by condensation caused by temperature variations. Therefore, **nyb** fan bearings are filled with grease at the factory to exclude air and moisture. Such protection is adequate for shipment and subsequent immediate installation.

For long term or outdoor storage, mounted bearings should be regreased and wrapped with plastic for protection. **Rotate the fan wheel by hand at least every two weeks to redistribute grease on internal bearing parts.** Each month the bearings should be purged with new grease to remove condensation, since even a filled bearing can accumulate moisture. Use caution when purging, as excessive pressure can damage the seals. Rotate the shaft while slowly adding grease.

Operation

Check the setscrew torque before start-up (see table for correct values). Since bearings are completely filled with grease at the factory, they may run at an elevated temperature during initial operation. Surface temperatures may reach 180°F. and grease may bleed from the bearing seals. This is normal and no attempt should be made to replace lost grease. Bearing surface temperatures will decrease when the internal grease quantity reaches a normal operating level. Relubrication should follow the recommended schedule.

Lubrication

Use the table for relubrication scheduling according to operating speed and shaft diameter. Bearings should be lubricated with a premium quality lithium-based grease conforming to NLGI Grade 2. Examples are:

Mobil	-	Mobilith AW2	Chevron	-	Amolith #2
Texaco	-	Premium RB	Shell	-	Alvania #2

These greases are for bearing surface temperatures of 40°F. to 180°F. For surface temperatures of 181°F. to 230°F. use Mobilith SHC220.

Do not use “high temperature” greases, as many are not formulated to be compatible with fan bearings.

Add grease to the bearing while running the fan or rotating the shaft by hand. Be sure all guards are in place if lubrication is performed while the fan is operating. Add just enough grease to cause a slight purging at the seals. Except on split pillowblocks. Completely filled bearings will run hotter until a sufficient amount of grease is purged out of the seals.

Split pillowblock bearings (Link-Belt P-LB6800 & P-LB6900, SKF SAF 22500, Dodge SAF-XT) should be cleaned and repacked at approximately every eighth lubrication interval. This requires removal of the bearing cap. Clean out old grease and repack the bearing with fresh grease. Pack the bearing fully and fill the housing reservoir to the bottom of the shaft on both sides of the bearing. Replace the bearing cap, being careful not to mix caps as they are not interchangeable from one bearing to another. **Do not over lubricate.**

BEARING LUBRICATION INTERVAL [months]

RPM / Shaft	1 - 500	501-1000	1001-1500	1501-2000	2001-2500	2501-3000	3001-3500	3501-4000
1 7/16	6 / 6	6 / 4	5-6 / 4	4-6 / 2	4-6 / 2	3-5 / 1	2-4 / 1	2-4 / 1
1 11/16	6 / 6	6 / 4	4-6 / 2	4-6 / 1	2-4 / 1	2-4 / 1	2 / 1-2	1-2 / 1-2
2 3/16			6	4-6	4	2-4	2	--
2 7/16			6	4-6	4	2-4	2	--
2 15/16			4-6	4-6	2-4	2	1-2	--

Ball Bearings & Split Split Pillowblock Spherical Roler Bearings → / ← **Non- Split Pillowblock Spherical Roller Bearings**

NOTE:

1. **These are general recommendations only; specific manufacturer’s recommendations may vary slightly.**
2. **Assumes clean environment, -20°F. to 120°F.**
   a. **Consult The New York Blower Company for operation below -20°F. ambient.**
   b. **Ambient temperatures greater than 120°F. will shorten bearing life.**
   c. **Under extremely dirty conditions, lubricate more frequently.**
3. **Assumes horizontal mounting configuration. For vertically mounted applications, lubricate twice as frequently.**

COMMON FAN PROBLEMS

Excessive Vibration

A common complaint regarding industrial fans is “excessive vibration”. **nyb** is careful to ensure that each unit is precisely balanced prior to shipment; however, there are many other causes of vibration including:

1. Loose mounting bolts, setscrews, bearings or couplings.
2. Misalignment or excessive wear of couplings or bearings.
3. Misaligned or unbalanced motor.
4. Bent shaft due to mishandling or material impact.
5. Accumulation of foreign material on the wheel.
6. Excessive wear or erosion of the wheel.
7. Excessive system pressure or restriction of airflow due to closed dampers.
8. Inadequate structural support, mounting procedures or materials.
9. Externally transmitted vibration.

Inadequate Performance

1. Incorrect testing procedures or calculations.
2. Fan running too slowly.
3. Fan wheel rotating in wrong direction or installed backwards on shaft.
4. Wheel not properly centered relative to inlet cone.
5. Damaged or incorrectly installed cut off sheet or diverter.
6. Poor system design, closed dampers, air leaks, clogged filters, or coils.
7. Obstructions or sharp elbows near inlets.
8. Sharp deflection of airstream at fan outlet.

Excessive Noise

1. Fan operating near “stall” due to incorrect system design or installation.
2. Vibration originating elsewhere in the system.
3. System resonance or pulsation.
4. Improper location or orientation of fan intake and discharge.
5. Inadequate or faulty design of supporting structures.
6. Nearby sound reflecting surfaces.
7. Loose accessories or components.
8. Loose drive belts.
9. Worn bearings.

Premature Component Failure

1. Prolonged or major vibration.
2. Inadequate or improper maintenance.
3. Abrasive or corrosive elements in the airstream or surrounding environment.
4. Misalignment or physical damage to rotating components or bearings.
5. Bearing failure from incorrect or contaminated lubricant or grounding through the bearings while arc welding.
6. Excessive fan speed.
7. Extreme ambient or airstream temperatures.
8. Improper belt tension.
9. Improper tightening of wheel setscrews.

REPLACEMENT PARTS

It is recommended that only factory-supplied replacement parts be used. **nyb** fan parts are built to be fully compatible with the original fan, using specific alloys and tolerances. These parts carry a standard **nyb** warranty.

When ordering replacement parts, specify the part name, **nyb** shop and control number, fan size, type, rotation (viewed from drive end), arrangement and bearing size or bore. Most of this information is on the metal nameplate attached to the fan base.

For assistance in selecting replacement parts, contact your local **nyb** representative or visit: http://www.nyb.com.

Example: Part required: Wheel/shaft assembly
Shop/control number: B-10106-100
Fan description: Size 2206A10 Pressure Blower
Rotation: Clockwise
Arrangement: 4

Suggested replacement parts include:

Wheel	Component parts:	Damper
Shaft •		Motor
Bearings*		Coupling*
Shaft Seal*		Sheaves*
		V-Belts*

• For Arrangement 1/8 fan only.

SPECIFY ROTATION AS VIEWED FROM DRIVE SIDE

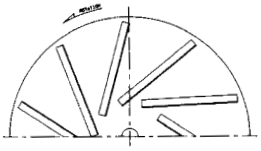

ARROW INDICATES COUNTER CLOCKWISE ROTATION

Arrangement 4
Pressure Blower

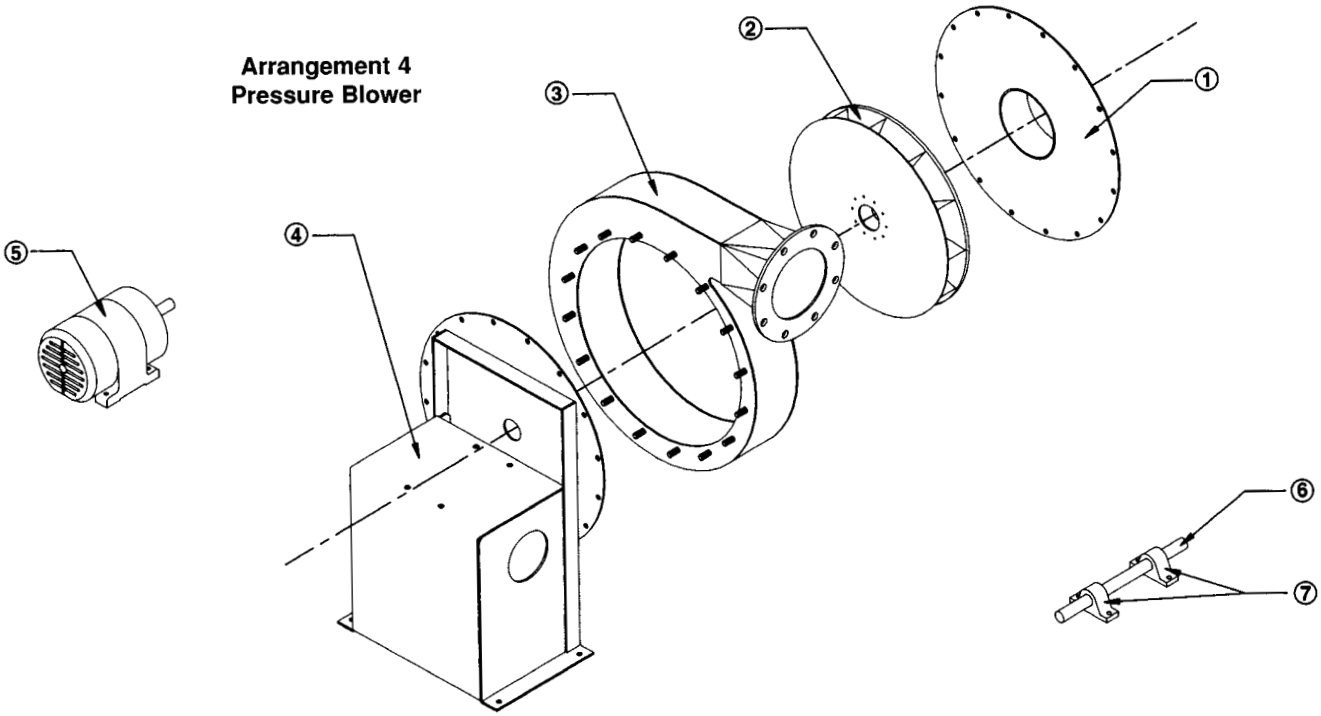

Arrangement 4
Type HP
Pressure Blower

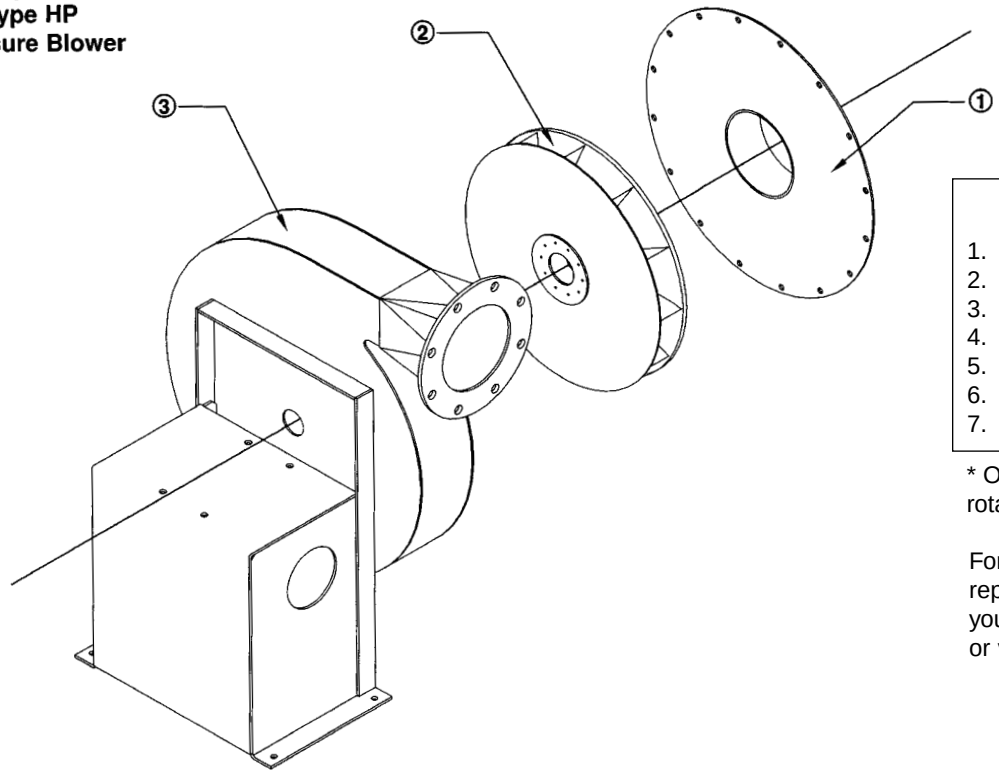

Parts List

1. Inlet Plate Assembly
2. Wheel*
3. Housing*
4. Pedestal Assembly
5. Motor
6. Shaft
7. Bearings

* Order for parts must specify rotation.

For assistance in selecting replacement parts, contact your local **nyb** representative or visit: http://www.nyb.com.

Form 300 GPB SW
Printed in U.S.A.

Using Performance Curves

Performance is shown according to outlet sizes for quick reference to duct diameter and velocity. Brake horsepower increments are identified on each curve. Recommended standard blower size and motor combinations are based on the most efficient area of operation and are indicated by the arrows. Nonstandard combinations are generally available, but are usually less efficient than the standard combinations.

SIZING NOMENCLATURE

7-digit model number designates the wheel diameter, outlet size, wheel type, and nominal motor horsepower.

Note: the last two digits showing motor horsepower are not required for Arrangement 1 Pressure Blowers.

EXAMPLE

21	06	A	7½
Wheel diameter	Outlet size [inches]	Wheel type A = aluminum S = steel/ stainless steel	Nominal horse-power

PROCEDURE	STEPS	EXAMPLE
Determine the appropriate outlet size.	1	The 06 outlet is selected for 800 CFM at 32"SP.
Plot the CFM and SP [standard] and follow a projected system line up to the pressure curve that meets or slightly exceeds the required performance.	2	A Size 2106A will provide 820 CFM at 33.6"SP.
Determine the BHP required for the point of operation . . . see page 4 for steel or stainless-steel wheel factors.	3	2106A requires 6.3 BHP. 2106S requires 7.2 BHP [6.3 x 1.15].
Read to the right to select motor horsepower.	4	A 7½ HP motor will cover both wheel types.

Note: The horsepower coverage of a given motor will increase 15% when a 1.15 service factor motor is utilized.

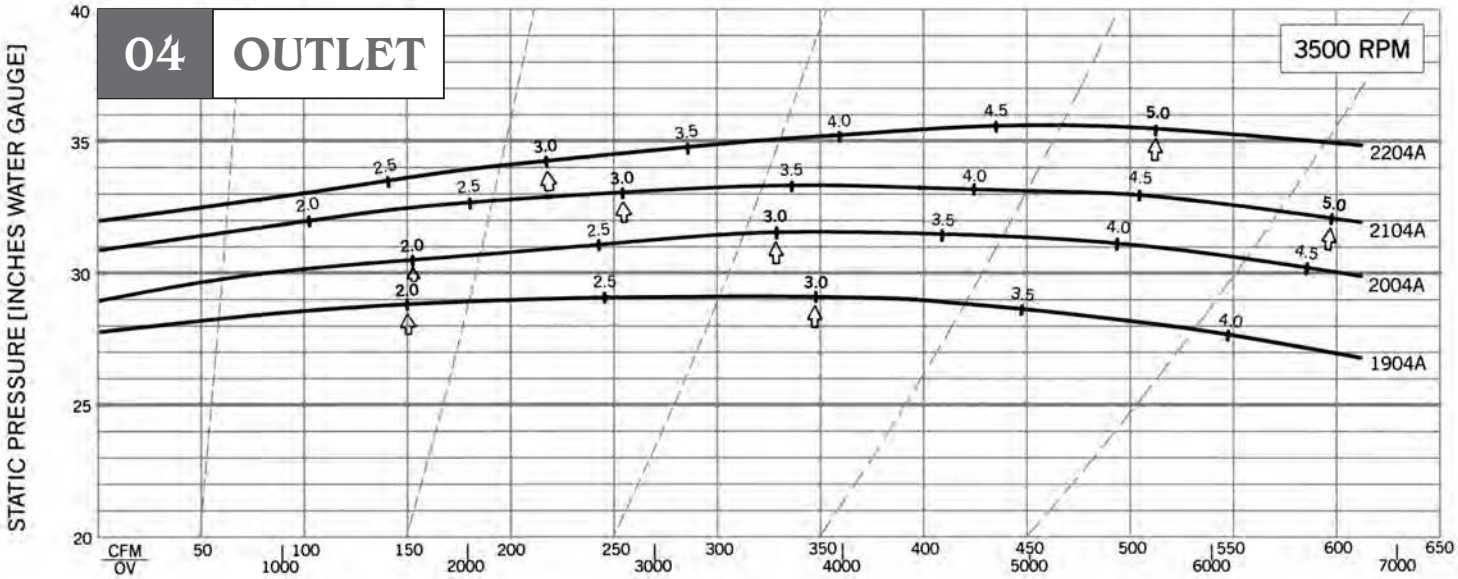

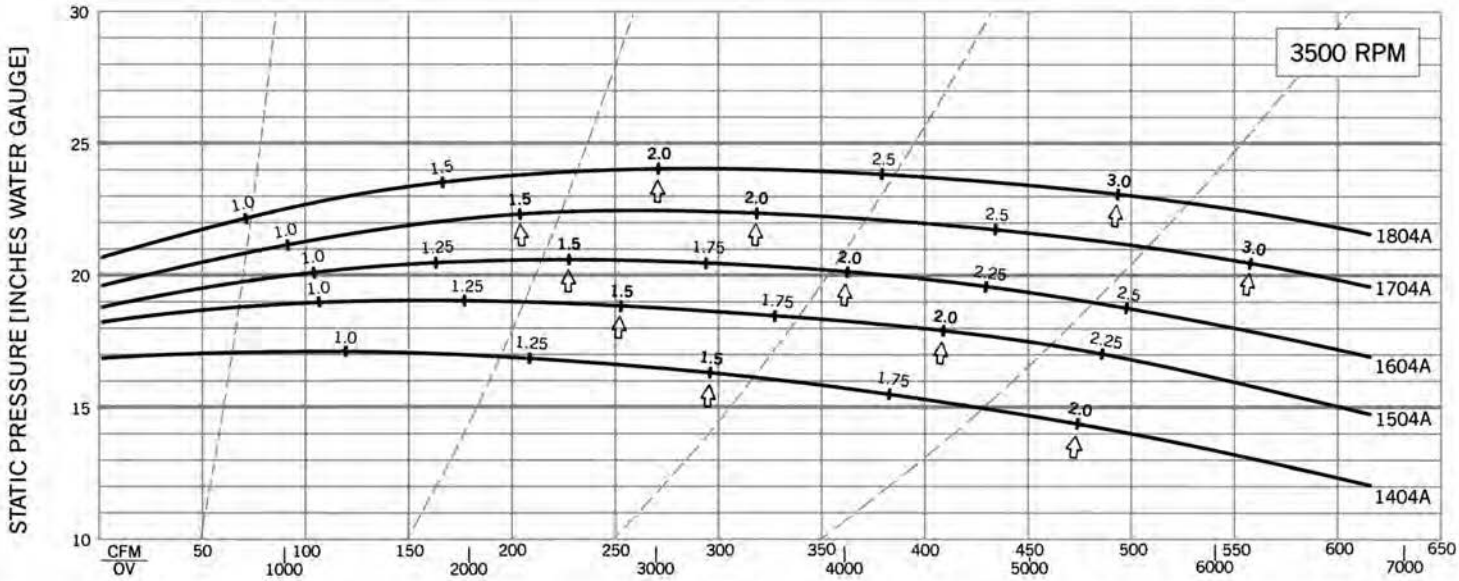

Performance shown is installation Type B: Free inlet, Ducted outlet. Power rating (BHP) does not include drive losses. Performance ratings do not include the effects of appurtenances in airstream.

06 OUTLET

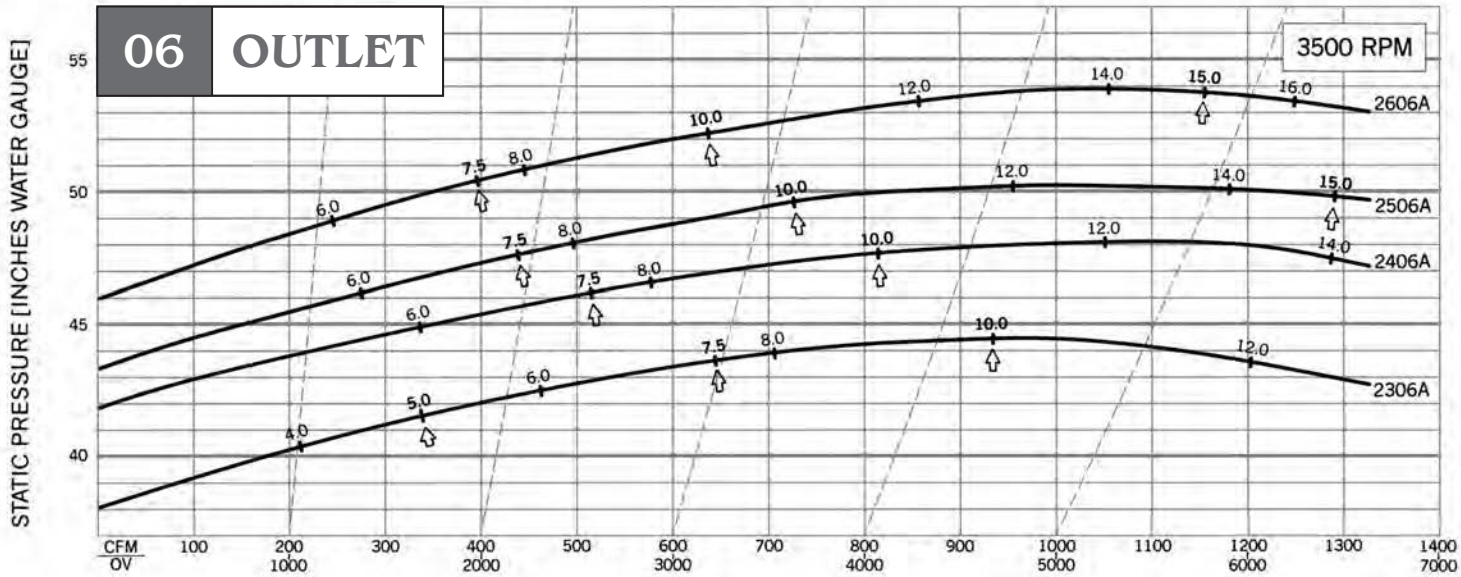

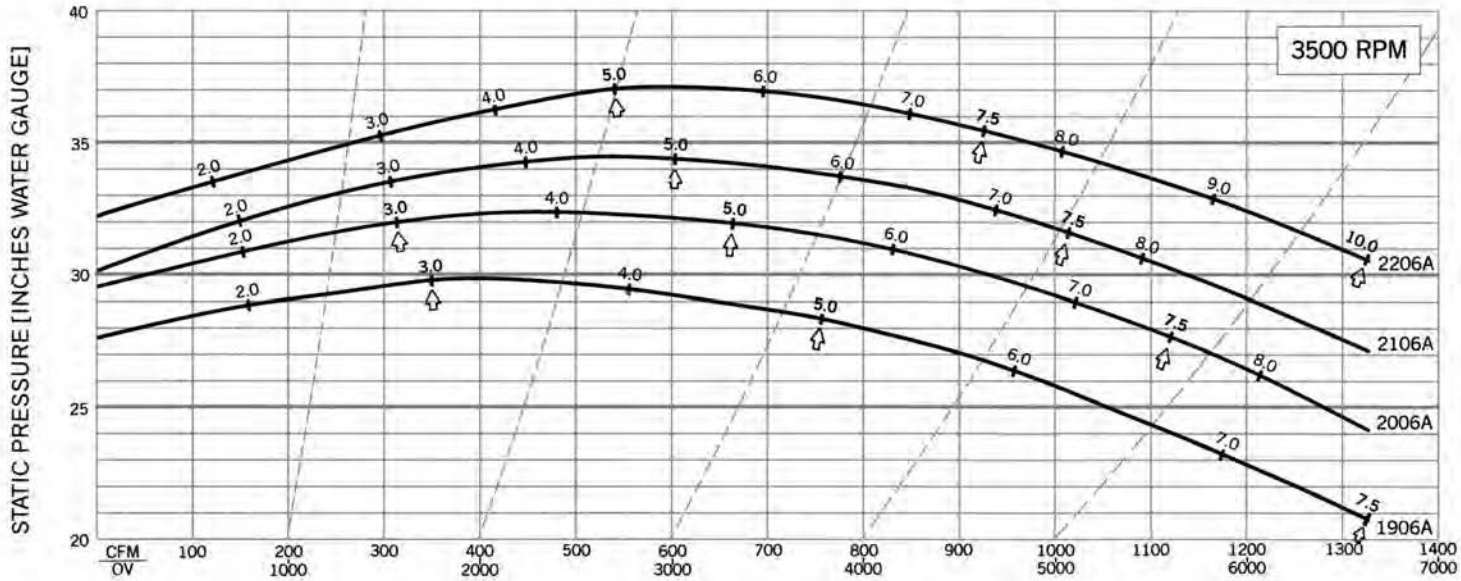

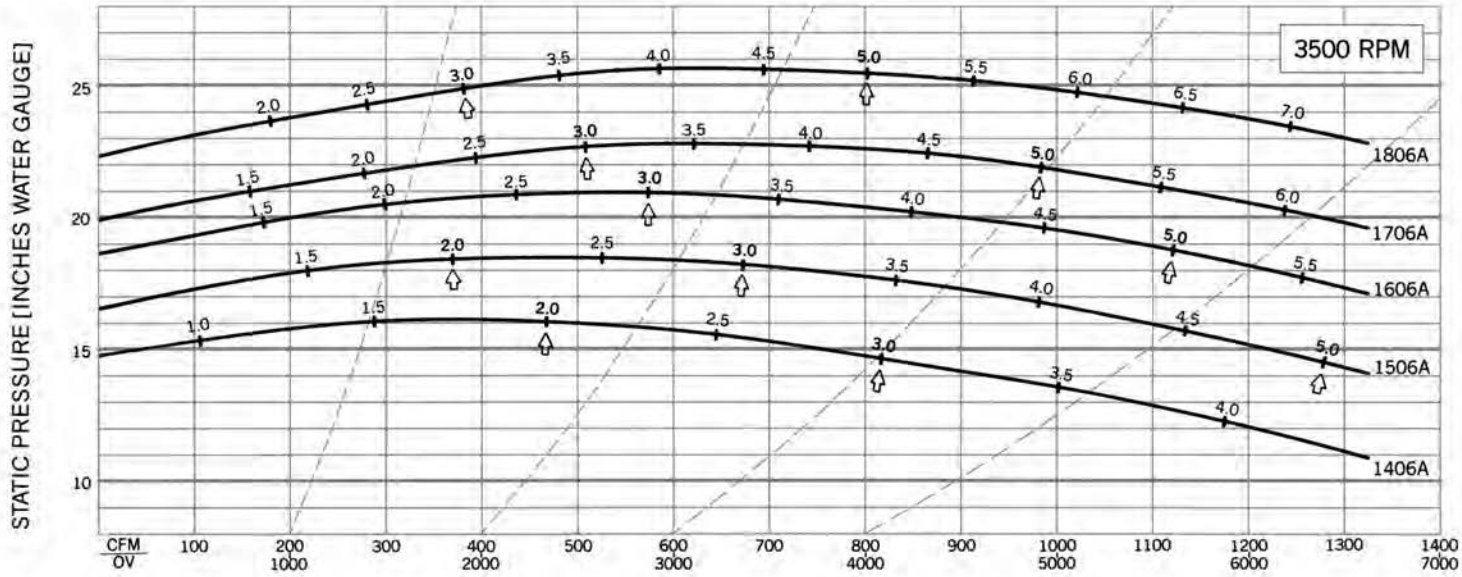

Performance shown is installation Type B: Free inlet, Ducted outlet. Power rating (BHP) does not include drive losses.
Performance ratings do not include the effects of appurtenances in airstream.

08 OUTLET

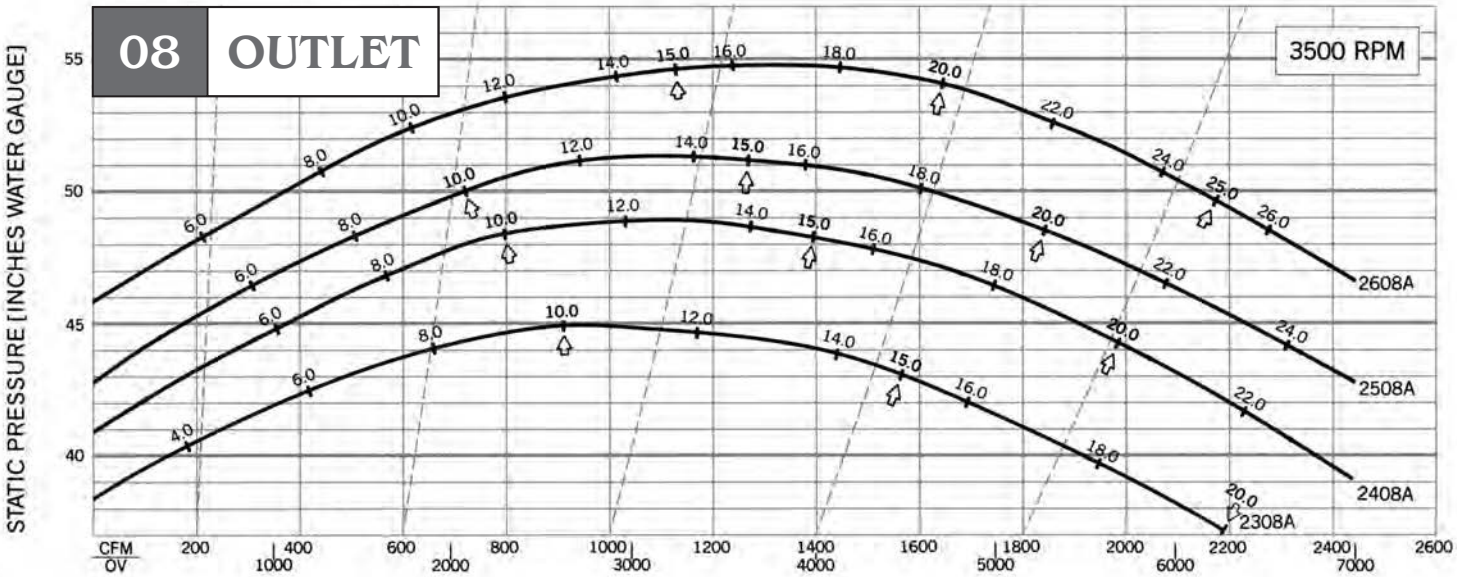

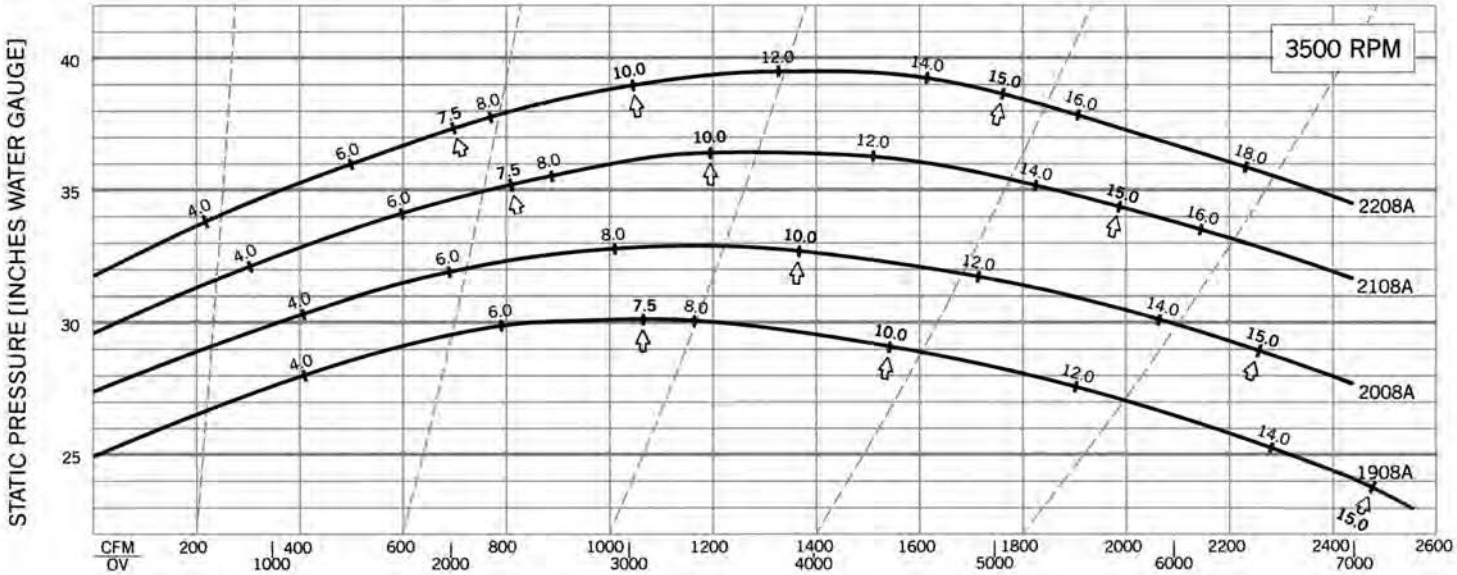

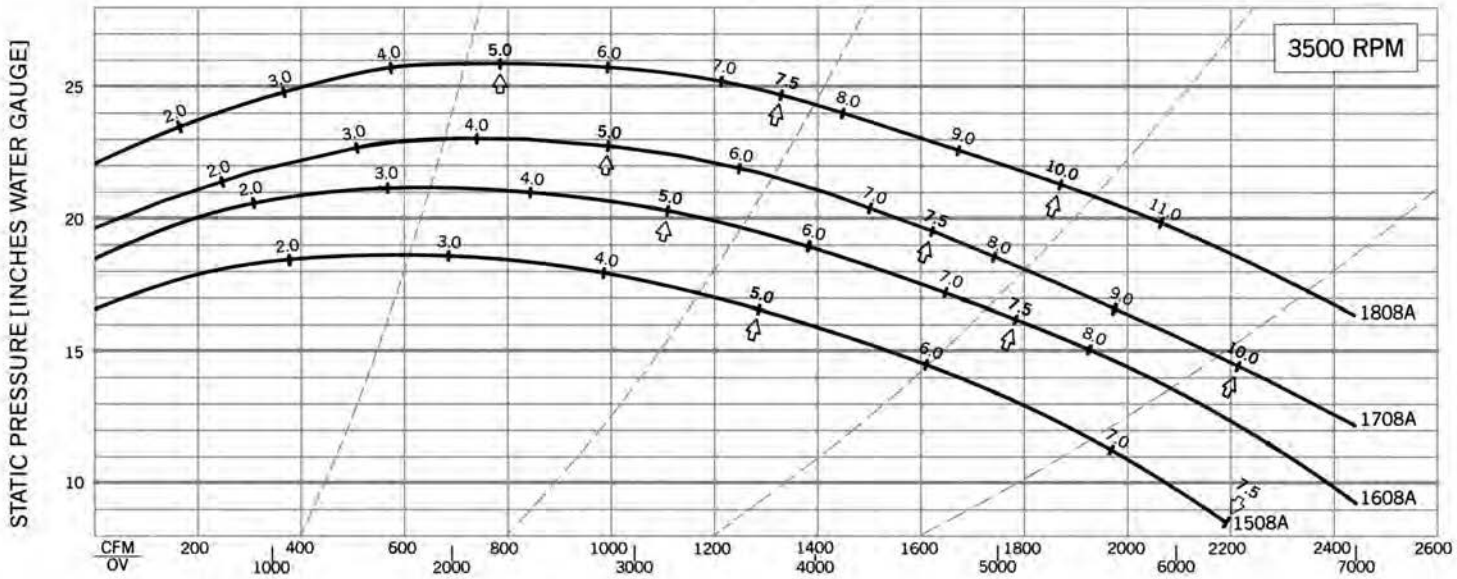

Performance shown is installation Type B: Free inlet, Ducted outlet. Power rating (BHP) does not include drive losses.
Performance ratings do not include the effects of appurtenances in airstream.

Recommended

SAFETY PRACTICES

for Users and Installers of Industrial and Commercial Fans

AMCA Publication 410-96

FOREWORD

i. This publication has been prepared by the Air Movement Division of the Air Movement and Control Association International, Inc. (AMCA International). The information contained in this publication has been derived from many sources. The suggestions made necessarily should be general in their meaning and cannot be applied literally to all specific situations or conditions.

ii. ***The safe installation and operation of fans is the responsibility of the system designer, installer, maintainer, and user.*** From the initial system design through the life of the equipment, safety should be a foremost consideration. Some areas which require some special attention include system design, layout and construction, fan performance specification, foundation and installation details, storage procedures, start-up and commissioning procedures, operation, maintenance, and repair. Specific safety requirements are mandated by federal, state, and local codes. *Recommended Safety Practices for Users and Installers of Industrial and Commercial Fans* is published by AMCA International for assistance. System designers, installers, maintainers, and users should consult and properly comply with all applicable codes and guidelines.

iii. The safety recommendations contained herein are intended to assist designers, installers, maintainers, or other users of air moving devices in the safe operation and use of the devices mentioned. These recommendations do not represent the only methods, procedures, or devices appropriate for the situations discussed. Caution should be used at all times when working in or around moving parts.

iv. AMCA International disclaims any and all warranties, expressed or implied, regarding the products sold by the manufacturer with which this booklet has been provided. Further, AMCA International recommends that competent personnel be consulted in deciding what is the preferred or recommended safety procedure in a particular instance where the guidelines contained in this booklet are unclear or in any way incomplete.

v. AMCA International has offered the information within this booklet to assist in the safe operation, maintenance, and use of the products sold by members of AMCA International. In so doing, AMCA International does not assume any legal duties of the designer or manufacturer to instruct or warn about their product. AMCA International expressly disclaims liability for any injury or damage arising out of the operation or use of the product or the guidelines contained herein.

vi. These recommended safety practices were adopted by the AMCA International membership on April 28, 1996.

Power Roof Ventilator

Wall Exhauster

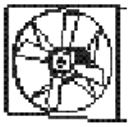

Propeller Fan

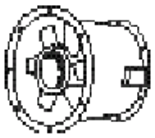

Axial Fan

1. INTRODUCTION

Centrifugal Fan

Upblast Roof Exhauster

1.1 Fans and other air moving devices are made in a wide variety of types, sizes, and arrangements. This publication addresses the proper use and installation of industrial and commercial fans. It is not intended to address residential and consumer fans.

1.2 Various "size" factors are important when assessing potential for injury; some factors are: diameter of impeller (wheel, rotor, propeller), rotational inertia, voltage, and current.

1.3 This guide is intended to assist in the safe installation of air moving equipment and to warn operating and maintenance personnel of the commonly recognized hazards associated with this equipment.

1.4 ***Handling and installation should always be performed only by experienced and trained personnel who are aware of the hazards associated with rotating equipment. Failure to comply with these practices may result in death or serious bodily injury.*** In addition to following the manufacturer's installation instructions, care should be taken to ensure compliance with specific safety requirements mandated by federal, state, and local codes. Industry safety standards and practices published by AMCA International and by other recognized agencies and associations should be consulted and followed where applicable.

2. PERSONNEL SAFETY ACCESSORIES

2.1 GENERAL

2.1.1 Protective devices are incorporated as standard construction on some types of fans but on many fans, these devices are offered as optional accessories. This is done because the need for the devices and the design required will frequently depend upon the type of system, fan location, and operating procedures being employed. Proper protective safety devices; company safety standards; specific safety requirements mandated by federal, state, and local codes; and industry safety standards and practices published by AMCA International and by other recognized agencies and associations should be determined by the user, who should specify and obtain the appropriate devices from the fan manufacturer or others, and should not allow operation of the equipment without them. Examples of available devices include the following:

2.2 FAN GUARDS

2.2.1 All fans have moving parts which require guarding in the same way as other moving machinery. Fans located less than seven (7) feet above the floor require special consideration. Specific safety requirements should comply with mandated federal, state, and local codes; and industry safety standards and practices published by AMCA International and by other recognized agencies and associations should be followed.

2.2.2 Roof-mounted fans and other fans which are not generally accessible may not require safety guards which might otherwise be appropriate. Where accessibility to these fans is occasional or infrequent, the expense of permanent guarding may be reduced through the use of lockout switches and suitable warnings. In such cases, maintenance personnel

© 1996

should engage the lockout switch before undertaking any maintenance or repairs. As is the case with other machinery involving moving parts, common sense and caution will preserve personal safety.

Industrial Type Guard For Propeller Fan

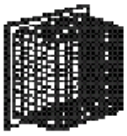

Maximum Safety Guard for Propeller Fan

Screen on Roof Ventilator

2.3 INLET AND OUTLET GUARDS

2.3.1 Axial and centrifugal fans are often connected directly to ductwork which will prevent contact with the internal moving parts; when an exposed inlet or outlet represents a hazard, a suitable guard should be installed.

Centrifugal Fan Protected by Ductwork

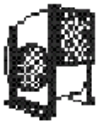

Inlet or Outlet Guard on Centrifugal Fan

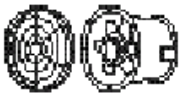

Guard for Axial Fan With Non-Ducted Inlet or Outleg

2.4 DRIVE GUARDS

2.4.1 Fans may be driven directly from the motor shaft or through a belt drive. Where the bearing assembly, rotating shaft, sheaves, or belts are exposed, a suitable guard may need to be provided. Some example guards are shown below.

Drive Coupling Guard

Heat Slinger Guard (Shaft and bearing guard omitted for clarity

Shaft and Bearing Guard

2.4.2 Drive guards may be required for tubular centrifugal or axial fans to cover the exposed drive sheave and belts outside the fan housing.

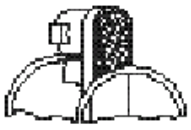

Drive Guard - Axial Fan

2.4.3 A typical centrifugal fan drive guard may vary with the arrangement. Safety guards should be used when drive systems are accessible to personnel. In restricted areas, omission of the back cover may be acceptable.

Drive Guard - Centrifugal Fan

2.4.4 Dampers and their linkage may operate suddenly without warning at high speeds Dampers and their linkage contain pinch points which should be identified and guarded.

3. HIDDEN DANGERS

3.1 GENERAL

3.1.1 In addition to the obvious hazards associated with the moving parts of rotating machinery, fans present additional potential hazards that are not so obvious and should be considered by the system designer and user for safe operation.

3.2 SUCTION AND AIR PRESSURE

3.2.1 Fans operate by creating suction and air pressure which can be hazardous. Solid objects can be drawn into a fan's inlet and then become dangerous projectiles when they are exhausted through the fan's outlet. ***Solid objects can also cause fan failure or impeller failure due to imbalance or damage to the impeller blades.*** Personnel in close proximity to a fan inlet can be overcome by the suction, and drawn into the fan.

Special Purpose Intake Screen

3.2.2 Whenever there is a possibility that solid objects can be drawn into a remote intake, the intake should be guarded at all times. Before a guard is removed, the fan should be disconnected and the power supply locked out.

3.2.3 Where fans are installed over an occupied area, safety guards should be provided to prevent dropped objects from entering this area during installation and maintenance.

3.2.4 Access doors to a fan or duct system should never be opened while the fan is operating or coasting to a stop. On the downstream (or pressure) side of the system, releasing the door with the system in operation may result in an explosive opening. On the upstream (or suction) side, the inflow may be sufficient to draw in tools, clothing, and other materials. The power supply should always be locked out prior to accessing a fan or ductwork.

3.2.5 Fan design sometimes requires access doors to be supplied with internal components such as a plug to fill a hole in the fan casing. These doors can often be heavy and difficult to handle. Care should be exercised when opening, removing, and installing these components.

Bolted Access Door in Duct

3.3 WINDMILLING

3.3.1 Even when the power supply is locked out, fans may cause injury or damage if the impeller is subject to "windmilling" which is the turning of the impeller and drive components due to a draft in the system. To guard against this hazard, the impeller should be secured to physically restrict rotational movement.

3.4 TEMPERATURE

3.4.1 Many fans, fan motors, and fan components run at temperatures that could burn someone who comes in contact with the hot areas, including discharged or leaking gases. If this potential hazard is present, steps should be taken so that personnel working near the fan are aware of the danger and can exercise caution.

3.5 FAN NOISE AND ENVIRONMENT

3.5.1 Some fans can generate sound that could be haz ardous to exposed personnel. Sound pressure can be measured in the field, but obtaining accurate data is difficult. The environment in which the fan operates can impact the ability to obtain accurate fan sound readings. Consult the manufacturer for fan sound data. It is the responsibility of the system designer, installer, user, and maintainer to comply with specific safety requirements mandated by federal, state, and local codes; and to follow industry safety standards and practices published by AMCA International and by other recognized agencies and associations, regarding personnel safety from exposure to fan noise associated with use and exposure to equipment.

Hearing Protection

3.6 STROBOSCOPIC EFFECT

3.6.1 The stroboscopic effect of certain lights in combination with certain fan speeds may cause a rotating assembly to appear stopped. In these cases, irregular markings can be placed on the moving parts to prevent this type of effect. Personnel should be warned that the fan may be in motion even if it appears not to be.

3.7 SPECIAL PRUPOSE FANS AND SYSTEMS

3.7.1 The hidden dangers associated with Special Purpose Fans used in special systems are covered in Section 6.

4. POWER ISOLATION

4.1 Every fan should be installed with a suitable device allowing it to be completely disconnected or isolated from the power supply.

4.2 Many fans are started by remote switches or push-buttons, by interlocks with other equipment, or by automatic controls. Before performing any maintenance, inspection, or other activity which will require removal of guards, ductwork, access doors, etc., or exposure of moving parts, the fan power supply should be locked out and the fan tagged out of service.

4.3 In some installations other equipment, such as gas burners, may be interlocked with the fan so that disconnecting the fan will automatically shut off the burner or other device. Maintenance on systems of this type should be performed only under the supervision of competent engineering personnel and in accordance with applicable codes and standards.

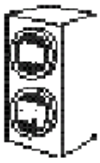

Remote Switch

Disconnect Switch

Lock Carried by Maintenance Personnel

4.4 In cases where the fan is power driven by a source other than an electric motor, appropriate provisions should be made for the isolation or disengagement of the power supply.

5. START-UP CHECK LIST

5.1 GENERAL

5.1.1 Before putting any fan into initial operation, the manufacturer's instructions should be followed. Transportation, handling, and installation can cause fasteners to loosen, and cause misalignment of fan components. Carefully follow this check list when commissioning equipment.

5.1.2 Lock out the primary and all secondary power sources.

5.1.3 A complete inspection should be made of all of the ductwork and the interior of the fan. Make certain there is no foreign material which can be drawn into or blown through the fan or ductwork. Appropriate protective measures and safety practices should be observed when entering or working within these areas. These measures might include the use of goggles, respirators, or other personal protective devices.

5.1.4 Make sure the foundation or mounting arrangement and the duct connections are adequately designed and installed per drawings and in accordance with recognized acceptable engineering practices and with the fan manufacturer's recommendations.

5.1.5 Check and tighten all bolts, fasteners, and set screws as necessary.

5.1.6 Check the fan assembly and bearings for proper grounding to prevent static electricity discharge.

5.1.7 Ensure power and drive components such as motor starter, variable frequency drive, or hydraulic power unit are properly sized, matched, and connected to the fan.

5.1.8 Check bearings for recommended lubricant and lubrication amount.

5.1.9 Spin the rotating assembly to determine whether it rotates freely, without hitting anything, and is not grossly out of balance.

5.1.10 Inspect impeller for proper rotation for the fan design.

5.1.11 Check alignment of drives and all other components.

5.1.12 Check the belt drive for proper sheave selection and installation and make sure the sheaves are not reversed (excessive speeds could develop).

5.1.13 Check for recommended belt tension.

5.1.14 Properly secure all safety guards.

5.1.15 Assure that all appropriate warnings have been put in place.

5.1.16 Secure all access doors to the fan and ductwork.

5.1.17 Momentarily energize the fan to check the direction of rotation. Listen as the fan coasts to a stop for any unusual noise, identify the source, and take corrective action as necessary.

5.1.18 Switch on the electrical supply and allow the fan to reach full speed. Check carefully for:

(1) Excessive vibration
(2) Unusual noise
(3) Proper belt alignment
(4) Proper lubrication
(5) Proper amperage, voltage, or power values.
(6) If any problem is indicated, **SWITCH OFF IMMEDIATELY.**
(7) Lock out the power supply. Secure the fan impeller if there is a potential for windmilling. Check carefully for the cause of the trouble, correct as necessary, and repeat check list procedure.

5.2 Even if the fan appears to be operating satisfactorily, shut down after a brief period, lock out the power supply, and recheck items 5.1.5 through 5.1.17 as the initial start-up may have loosened the bolts, fasteners, and set screws.

5.3 The fan may now be put into operation, but during the first eight hours of running, it should be closely observed and checked for excessive vibration and noise. At this time checks should also be made of motor input current and motor and bearing temperatures to ensure that they do not exceed manufacturer's recommendations.

5.4 After eight hours of operation, the fan should be shut down and the power locked out. Check list items 5.1.5 through 5.1.17 should be inspected and adjusted if necessary.

5.5 After twenty-four (24) hours of satisfactory operation, the fan should be shut down (locked out) and the drive belt tension should be readjusted to recommended tension.

5.6 After commissioning and start-up, the fan should be operated and maintained in accordance with the manufacturer's and component manufacturer's recommendations. Some basic guidelines for **WARNING SIGNS** and **ROUTINE MAINTENANCE** are included in Sections 7 and 8 of this publication. These sections are meant as a supplement to other publications and are not intended to replace the manufacturer's instructions.

6. SPECIAL PURPOSE FANS

6.1 Most fans are designed to handle clean air at standard temperatures between 32 F and 120 F. These fans should not be placed in systems or used for other than their design intended use. *Special Purpose Fans* are designed for use in systems that may include extreme temperatures, explosive, toxic, or special gases, material handling, corrosive environments, or other special hazards which should be carefully considered. Specific safety requirements should comply with mandated federal, state, and local codes; and industry safety standards and practices published by AMCA International and by other recognized agencies and associations should be followed.

6.2 Where the system will handle explosive or flammable material (i.e., dust, fumes, vapors or gases), fans of spark-resistant construction should be used.

6.3 Fans connected by ductwork or other piping may contain gases other than air which are hazardous. In these cases, procedures should be established to prevent exposure of personnel working on or near the fan, and by maintenance personnel who may need to enter the fan. Appropriate personal protective equipment as determined by the material safety data sheet, and system operators should be utilized. Appropriate environmental protective measures should also be taken.

6.4 Fan inlet boxes, housings, ductwork, and other system components which are large enough to permit entry should be considered confined spaces. System areas may also serve as low points where heavy gases, liquids, or other substances may accumulate and present explosive, fire, health, or suffocation hazards. Appropriate protective measures and safety practices should be observed when entering or working within these areas.

6.5 Material-handling fans are specially designed to allow the fan to handle a specific type of material without excessive accumulation of material on the fan impeller. Fans handling corrosive gases or erosive material should be checked periodically. If loss of material is evident, the fan should be shut down, power supply locked out, and tagged out of service. The manufacturer or other qualified personnel should be consulted to determine if the fan is within safety limits for operation. To ensure satisfactory operation it is essential to observe the manufacturer's limitations concerning the type of material to be handled by the fan.

6.6 Fan ratings and maximum speed limits are typically based on the use of air at 70 F. At temperatures above the normal range (specified by the manufacturer), a reduction should be made in the maximum speed limit. Information on this reduction and on other precautions to be taken for high temperature applications should be obtained from the fan manufacturer. Personnel working near high temperature fans should be aware that coming in contact with the fan's housing, ductwork, or handled gases could result in serious burns. Where the danger of burns is not apparent, appropriate warnings should be posted. Appropriate protective apparel should be worn whenever working in close contact with heated housings or ductwork.

6.7 Corrosive contaminants can be formed when moisture combines with an active airborne chemical. Fans subjected to corrosive contaminants will corrode; however, suitable protective coatings or material, if used in

the fan construction, can delay corrosion. Protected fans should be regularly inspected to ensure that the protection remains effective. Personnel working in environments with airborne chemicals may require personal protective apparel equipment.

6.8 Where liquid can accumulate within the fan, provide for the installation of adequately sized drains.

6.9 In those applications where there is a potential for chemical build-up (such as grease, creosote, etc.), periodic cleaning and proper drainage are necessary to avoid a fire hazard.

7. WARNING SIGNS

7.1 GENERAL

7.1.1 A change in the operating characteristics of a fan may indicate the need for maintenance. Sudden changes may indicate severe problems or dangerous conditions developing. Investigate any changes in the operational characteristics or unusual symptoms of the fan. Refer to AMCA Publication 202, *Troubleshooting*, for a more detailed explanation of investigating procedures. Consult your manufacturer or other qualified consultant with questions concerning changes observed.

7.2 EXCESSIVE VIBRATION

7.2.1 Operational vibration levels are one of the best indicators of the condition of the blower. Careful observation and monitoring of vibration levels can detect a minor problem in the early stages of development when correction is less costly and easier. Recommended maximum vibration levels should be obtained from the equipment manufacturer.

7.2.2 If excessive vibration is observed, stop the fan and lock it out until the cause is corrected. Check for material build-up on the impeller. Generally this will show up as material flaking off the fan impeller and causing an imbalance which may lead to catastrophic failure of the fan or its components. Excessive vibration can also be caused by looseness in the drive train, loose fasteners, misalignment or impeller damage. Contact the fan manufacturer or other qualified consultant to determine the maximum vibration level if it is not included in maintenance instructions.

7.3 NOISE

7.3.1 Changes to the sound level may indicate maintenance is needed. Some unusual noises often heard include: bearing noise indicating the bearings need lubricant or replacement; scraping or ticking noise indicating the rotating parts are hitting the stationary parts; squealing indicating the belt drive needs tensioning; repeated changing pitch of the blower indicating operation of the blower at too low a flow. If any of these noises or any other unusual noises are detected, their cause should be determined and corrective action taken as necessary.

7.4 HIGH MOTOR TEMPERATURES

7.4.1 Check that cooling air to the motor has not been diverted or blocked by dirty guards or similar obstacles. Check the input amperage. An increase in amperage may indicate that some major change has occurred in the system.

7.5 HIGH BEARING TEMPERATURES

7.5.1 This condition is usually caused by improper lubrication; this can be either "over," "under," or "unsuitable" lubrication. In every case, if the cause of the trouble is not easily seen, experienced personnel should examine the equipment before it is put back in operation.

7.6 POOR PERFORMANCE

7.6.1 Too much flow or pressure or too little flow or pressure is often a symptom of a change in the operating system. A fan will typically operate at the same performance in a static system some typical causes include: operating of the fan backwards after maintenance procedures; filters dirty or not in place; change or blockage in the ductwork; change in speed of the fan (switching the sheaves); loss or failure of the impeller. All of these causes and many others will affect the flow and pressure produced by the fan.

8. ROUTINE MAINTENANCE

8.1 A preventive maintenance program is an important aspect of an effective safety program. Consult your manufacturer or other qualified consultant with questions concerning changes observed during periodic inspections and routine maintenance.

8.2 The fan manufacturer's operating and maintenance recommendations, as well as the components manufacturer's instructions (such as motor, bearing, drives, etc.) should be strictly followed.

8.3 *Maintenance should always be performed by experienced and trained personnel who are aware of the hazards associated with rotating equipment.* Do not attempt any maintenance on a fan unless the fan power supply has been locked out and tagged out and the impeller has been secured.

8.4 When performing maintenance functions which include disassembly of the fan, careful consideration should be given to the size, weight, center of gravity, and lifting means of the fan components. It should also be noted that the outboard bearing on some fans such as arrangements 1, 8, 9, and 10 is often cap-loaded. Removal of the securing means may result in a sudden change in impeller position.

8.5 Historical data is often the best indicator for determining the operational condition of the fan. Maintenance logs which include relubrication, vibration levels, temperature levels, power requirements, inspection, and other pertinent records should be maintained and consulted as necessary when assessing the condition of the fan.

8.6 Under normal circumstances, handling clean air, the system should require cleaning only once a year. However, the fan and system should be checked at regular intervals to detect any unusual accumulation.

8.7 The fan impeller should be specially checked for build-up of material or dirt which may cause an imbalance with resulting undue wear on bearings and belt drives. A regular maintenance program should be established as needed to prevent material build-up.

8.8 Periodic inspection of the rotating assembly should be made to detect any indication of weakening of the rotor because of corrosion, erosion, or metal fatigue. Where signs of deterioration are found, lock out and tag out the impeller until the unit has been inspected and approved by a qualified consultant.

G&L Pumps

Installation, Operation and Maintenance Instructions

Model NPE/ NPE-F

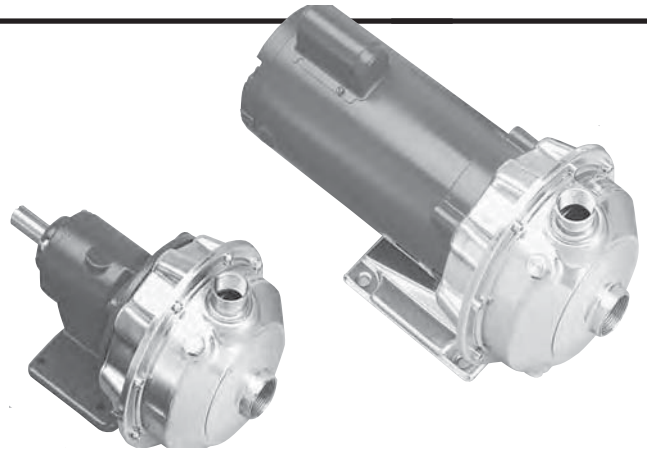

DESCRIPTION & SPECIFICATIONS:

The Models NPE (close-coupled) and NPE-F (frame-mounted) are end suction, single stage centrifugal pumps for general liquid transfer service, booster applications, etc. Liquid-end construction is all AISI Type 316 stainless steel, stamped and welded. Impellers are fully enclosed, non-trimable to intermediate diameters. Casings are fitted with a diffuser for efficiency and for negligible radial shaft loading.

Close-coupled units have NEMA 48J or 56J motors with C-face mounting and threaded shaft extension. Frame-mounted units can be coupled to motors through a spacer coupling, or belt driven.

1. Important:

1.1. Inspect unit for damage. Report any damage to carrier/dealer immediately.

1.2. Electrical supply must be a separate branch circuit with fuses or circuit breakers, wire sizes, etc., per National and Local electrical codes. Install an all-leg disconnect switch near pump.

CAUTION

Always disconnect electrical power when handling pump or controls.

1.3. Motors must be wired for proper voltage. Motor wiring diagram is on motor nameplate. Wire size must limit maximum voltage drop to 10% of nameplate voltage at motor terminals, or motor life and pump performance will be lowered.

1.4. Always use horsepower-rated switches, contactor and starters.

1.5. Motor Protection

1.5.1. Single-phase: Thermal protection for single-phase units is sometimes built in (check nameplate). If no built-in protection is provided, use a contactor with a proper overload. Fusing is permissible.

1.5.2. Three-phase: Provide three-leg protection with properly sized magnetic starter and thermal overloads.

1.6. Maximum Operating Limits:

Liquid Temperature:	212° F (100° C) with standard seal. 250° F (120° C) with optional high temp seal.
Pressure:	75 PSI.
Starts Per Hour:	20, evenly distributed.

1.7. Regular inspection and maintenance will increase service life. Base schedule on operating time. Refer to Section 8.

2. Installation:

2.1. General

2.1.1. Locate pump as near liquid source as possible (below level of liquid for automatic operation).

2.1.2. Protect from freezing or flooding.

2.1.3. Allow adequate space for servicing and ventilation.

2.1.4. All piping must be supported independently of the pump, and must "line-up" naturally.

CAUTION

Never draw piping into place by forcing the pump suction and discharge connections.

2.1.5. Avoid unnecessary fittings. Select sizes to keep friction losses to a minimum.

2.2. Close-Coupled Units:

2.2.1. Units may be installed horizontally, inclined or vertically.

CAUTION

Do not install with motor below pump. Any leakage or condensation will affect the motor.

2.2.2. Foundation must be flat and substantial to eliminate strain when tightening bolts. Use rubber mounts to minimize noise and vibration.

2.2.3. Tighten motor hold-down bolts before connecting piping to pump.

2.3. Frame-Mounted Units:

2.3.1. It is recommended that the bedplate be grouted to a foundation with solid footing. Refer to Fig.1.

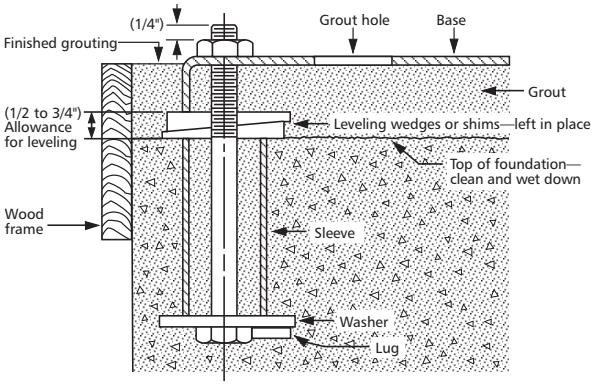

Figure 1

Goulds Pumps

ITT Industries

2.3.2. Place unit in position on wedges located at four points (two below approximate center of driver and two below approximate center of pump). Adjust wedges to level unit. Level or plumb suction and discharge flanges.

2.3.3. Make sure bedplate is not distorted and final coupling alignment can be made within the limits of movement of motor and by shimming, if necessary.

2.3.4. Tighten foundation bolts finger tight and build dam around foundation. Pour grout under bedplate making sure the areas under pump and motor feet are filled solid. Allow grout to harden 48 hours before fully tightening foundation bolts.

2.3.5. Tighten pump and motor hold-down bolts before connecting the piping to pump.

3. Suction Piping:

3.1. Low static suction lift and short, direct, suction piping is desired. For suction lift over 10 feet and liquid temperatures over 120 F, consult pump performance curve for Net Positive Suction Head Required.

3.2. Suction pipe must be at least as large as the suction connection of the pump. Smaller size will degrade performance.

3.3. If larger pipe is required, an eccentric pipe reducer (with straight side up) must be installed at the pump.

3.4. Installation with pump below source of supply:

3.4.1. Install full flow isolation valve in piping for inspection and maintenance.

CAUTION

Do not use suction isolation valve to throttle pump.

3.5. Installation with pump above source of supply:

3.5.1. Avoid air pockets. No part of piping should be higher than pump suction connection. Slope piping upward from liquid source.

3.5.2. All joints must be airtight.

3.5.3. Foot valve to be used only if necessary for priming, or to hold prime on intermittent service.

3.5.4. Suction strainer open area must be at least triple the pipe area.

3.6. Size of inlet from liquid source, and minimum submergence over inlet, must be sufficient to prevent air entering pump through vortexing. See Figs. 2-5

3.7. Use 3-4 wraps of Teflon tape to seal threaded connections.

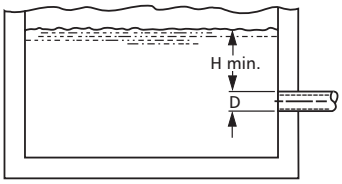

Figure 2

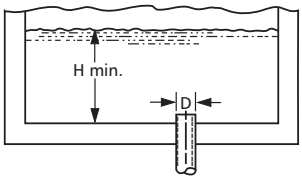

Figure 3

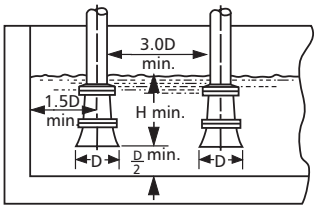

Figure 4

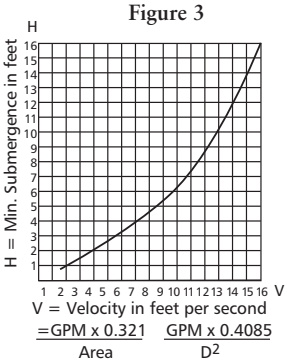

Figure 5

4. Discharge Piping:

4.1. Arrangement must include a check valve located between a gate valve and the pump. The gate valve is for regulation of capacity, or for inspection of the pump or check valve.

4.2. If an increaser is required, place between check valve and pump.

4.3. Use 3-4 wraps of Teflon tape to seal threaded connections.

5. Motor-To-Pump Shaft Alignment:

5.1. Close-Coupled Units:

5.1.1. No field alignment necessary.

5.2. Frame-Mounted Units:

5.2.1. Even though the pump-motor unit may have a factory alignment, this could be disturbed in transit and must be checked prior to running. See Fig. 6.

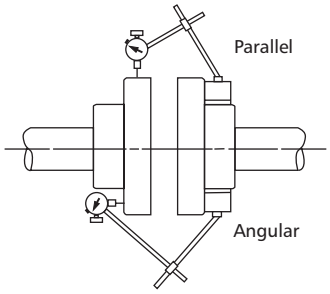

Figure 6

5.2.2. Tighten all hold-down bolts before checking the alignment.

5.2.3. If re-alignment is necessary, always move the motor. Shim as required.

5.2.4. Parallel misalignment - shafts with axis parallel but not concentric. Place dial indicator on one hub and rotate this hub 360 degrees while taking readings on the outside diameter of the other hub. Parallel alignment occurs when Total Indicator Reading is .005", or less.

5.2.5. Angular misalignment - shafts with axis concentric but not parallel. Place dial indicator on one hub and rotate this hub 360 degrees while taking readings on the face of the other hub. Angular alignment is achieved when Total Indicator Reading is .005", or less.

5.2.6. Final alignment is achieved when parallel and angular requirements are satisfied with motor hold-down bolts tight.

CAUTION

Always recheck both alignments after making any adjustment.

6. Rotation:

6.1. Correct rotation is right-hand (clockwise when viewed from the motor end). Switch power on and off quickly. Observe shaft rotation. To change rotation:

6.1.1. Single-phase motor: Non-reversible.

6.1.2. Three-phase motor: Interchange any two power supply leads.

7. Operation:

7.1. Before starting, pump must be primed (free of air and suction pipe full of liquid) and discharge valve partially open.

CAUTION

Pumped liquid provides lubrication. If pump is run dry,rotating parts will seize and mechanical seal will be damaged. Do not operate at or near zero flow. Energy imparted to the liquid is converted into heat. Liquid may flash to vapor. Rotating parts require liquid to prevent scoring or seizing.

7.2. Make complete check after unit is run under operating conditions and temperature has stabilized. Check for expansion of piping. On frame-mounted units coupling alignment may have changed due to the temperature differential between pump and motor. Recheck alignment.

8. Maintenance:

8.1. Close-Coupled Unit. Ball bearings are located in and are part of the motor. They are permanently lubricated. No greasing required.

8.2. Frame-Mounted Units:

8.2.1. Bearing frame should be regreased every 2,000 hours or 3 month interval, whichever occurs first. Use a #2 sodium or lithium based grease. Fill until grease comes out of relief fittings, or lip seals, then wipe off excess.

8.2.2. Follow motor and coupling manufacturers' lubrication instructions.

8.2.3. Alignment must be rechecked after any maintenance work involving any disturbance of the unit.

9. Disassembly:

Complete disassembly of the unit will be described. Proceed only as far as required to perform the maintenance work needed.

9.1. Turn off power.

9.2. Drain system. Flush if necessary.

9.3. Close-Coupled Units: Remove motor hold-down bolts.

Frame-Mounted Units: Remove coupling, spacer, coupling guard and frame hold-down bolts.

9.4. Disassembly of Liquid End:

9.4.1. Remove casing bolts (370).

9.4.2. Remove back pull-out assembly from casing (100).

9.4.3. Remove impeller locknut (304).

CAUTION

Do not insert screwdriver between impeller vanes to prevent rotation of close-coupled units. Remove cap at opposite end of motor. A screwdriver slot or a pair of flats will be exposed. Using them will prevent impeller damage.

9.4.4. Remove impeller (101) by turning counter-clockwise when looking at the front of the pump. Protect hand with rag or glove.

CAUTION

Failure to remove the impeller in a counter-clockwise direction may damage threading on the impeller, shaft or both.

9.4.5. With two pry bars 180 degrees apart and inserted between the seal housing (184) and the motor adapter (108), carefully separate the two parts. The mechanical seal rotary unit (383) should come off the shaft with the seal housing.

9.4.6. Push out the mechanical seal stationary seat from the motor side of the seal housing.

9.5. Disassembly of Bearing Frame:

9.5.1. Remove bearing cover (109).

9.5.2. Remove shaft assembly from frame (228).

9.5.3. Remove lip seals (138 & 139) from bearing frame and bearing cover if worn and are being replaced.

9.5.5. Use bearing puller or arbor press to remove ball bearings (112 & 168).

10. Reassembly:

10.1. All parts should be cleaned before assembly.

10.2. Refer to parts list to identify required replacement items. Specify pump index or catalog number when ordering parts.

10.3. Reassembly is the reverse of disassembly.

10.3.1. Impeller and impeller locknut assembled onto motor shaft with 10 ft-lbs of torque.

10.4. Observe the following when reassembling the bearing frame:

10.4.1. Replace lip seals if worn or damaged.

10.4.2. Replace ball bearings if loose, rough or noisy when rotated.

10.4.3. Check shaft for runout. Maximum permissible is .002" T.I.R.

10.5. Observe the following when reassembling the liquid-end:

10.5.1. All mechanical seal components must be in good condition or leakage may result. Replacement of complete seal assembly, whenever seal has been removed, is good standard practice.

It is permissible to use a light lubricant, such as glycerin, to facilitate assembly. Do not contaminate the mechanical seal faces with lubricant.

10.5.2. Inspect casing O-ring (513) and replace if damaged. This O-ring may be lubricated with petroleum jelly to ease assembly.

10.5.3. Inspect guidevane O-ring (349) and replace if worn.

CAUTION

Do not lubricate guidevane O-ring (349). Insure it is not pinched by the impeller on reassembly.

10.6. Check reassembled unit for binding. Correct as required.

10.7. Tighten casing bolts in a star pattern to prevent O-ring binding.

11. Trouble Shooting Chart:

MOTOR NOT RUNNING
(See causes 1 thru 6)

LITTLE OR NO LIQUID DELIVERED:
(See causes 7 thru 17)

POWER CONSUMPTION TOO HIGH:
(See causes 4, 17, 18, 19, 22)

EXCESSIVE NOISE AND VIBRATION:
(See causes 4, 6, 9, 13, 15, 16, 18, 20, 21, 22)

PROBABLE CAUSE:

1. Tripped thermal protector
2. Open circuit breaker
3. Blown fuse
4. Rotating parts binding
5. Motor wired improperly
6. Defective motor
7. Not primed
8. Discharge plugged or valve closed
9. Incorrect rotation
10. Foot valve too small, suction not submerged, inlet screen plugged.
11. Low voltage
12. Phase loss (3-phase only)
13. Air or gasses in liquid
14. System head too high
15. NPSHA too low:
    Suction lift too high or suction losses excessive. Check with vacuum gauge.
16. Impeller worn or plugged
17. Incorrect impeller diameter
18. Head too low causing excessive flow rate
19. Viscosity or specific gravity too high
20. Worn bearings
21. Pump or piping loose
22. Pump and motor misaligned

NPE Standard Repair Parts List

Item No.	Description	Materials of Construction
100	Casing	AISI 316L Stainless Steel
101	Impeller	
108A	Motor adapter with foot	
108B	Motor adapter less foot	
108C	Motor adapter with foot and Flush	
108D	Motor adapter less foot with Flush	
123	Deflector	BUNA-N
184A	Seal housing std.	AISI 316L S.S.
184B	Seal housing with seal flush	
240	Motor support	300 S.S.
	Rubber channel	Rubber
304	Impeller locknut	AISI 316 S.S.
347	Guidevane	AISI 316L S.S.
349	Seal-Ring, guidevane	Viton Standard
		EPR
		BUNA
370	Socket head screw, casing	AISI 410 S.S.
371	Bolts, motor	Steel/plated
383	Mechanical seal	
408	Drain and vent plug, casing	AISI 316 S.S.
412B	O-Ring, drain plugs	Viton, standard
		EPR
		BUNA
513	O-Ring, casing	Viton, standard
		EPR
		BUNA

Item 383 Mechanical Seal (⅝" seal)				
Rotary	Stationary	Elastomers	Metal Parts	Part No.
Carbon	Sil-Carbide	EPR	316SS	10K18
		Viton		10K55
Sil-Carbide		EPR		10K81
		Viton		10K62

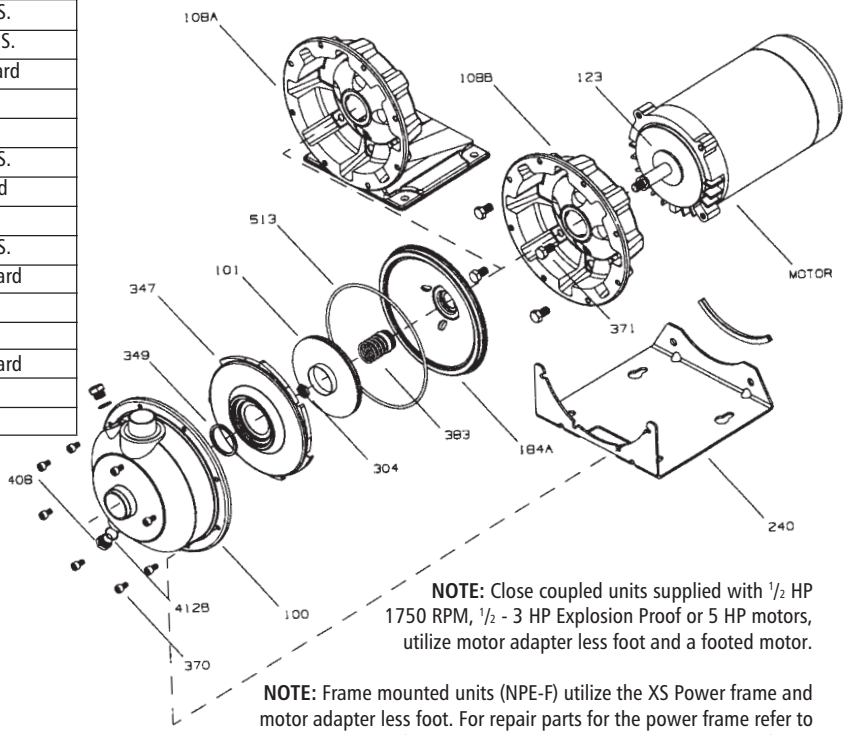

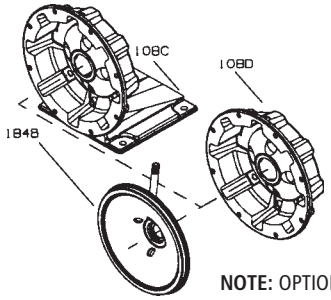

NOTE: OPTIONAL SEAL FLUSH COMPONENTS

NOTE: Close coupled units supplied with 1/2 HP 1750 RPM, 1/2 - 3 HP Explosion Proof or 5 HP motors, utilize motor adapter less foot and a footed motor.

NOTE: Frame mounted units (NPE-F) utilize the XS Power frame and motor adapter less foot. For repair parts for the power frame refer to the XS-Power frame repair parts page in the parts section of your catalog. To order the power frame complete order item 14L61

GOULDS PUMPS LIMITED WARRANTY

This warranty applies to all water systems pumps manufactured by Goulds Pumps.

Any part or parts found to be defective within the warranty period shall be replaced at no charge to the dealer during the warranty period. The warranty period shall exist for a period of twelve (12) months from date of installation or eighteen (18) months from date of manufacture, whichever period is shorter.

A dealer who believes that a warranty claim exists must contact the authorized Goulds Pumps distributor from whom the pump was purchased and furnish complete details regarding the claim. The distributor is authorized to adjust any warranty claims utilizing the Goulds Pumps Customer Service Department.

The warranty excludes:

(a) Labor, transportation and related costs incurred by the dealer;
(b) Reinstallation costs of repaired equipment;
(c) Reinstallation costs of replacement equipment;
(d) Consequential damages of any kind; and,
(e) Reimbursement for loss caused by interruption of service.

For purposes of this warranty, the following terms have these definitions:

(1) "Distributor" means any individual, partnership, corporation, association, or other legal relationship that stands between Goulds Pumps and the dealer in purchases, consignments or contracts for sale of the subject pumps.
(2) "Dealer" means any individual, partnership, corporation, association, or other legal relationship which engages in the business of selling or leasing pumps to customers.
(3) "Customer" means any entity who buys or leases the subject pumps from a dealer. The "customer" may mean an individual, partnership, corporation, limited liability company, association or other legal entity which may engage in any type of business.

THIS WARRANTY EXTENDS TO THE DEALER ONLY.

Goulds Pumps and the ITT Engineered Blocks Symbol are registered trademarks and tradenames of ITT Industries.

Visit us at www.goulds.com

Goulds Pumps

ITT Industries

© 2002 Goulds Pumps
Printed in USA

Performance Curves – 60 Hz, 3500 RPM
Curvas de Funcionamiento – 60 Hz, 3500 RPM

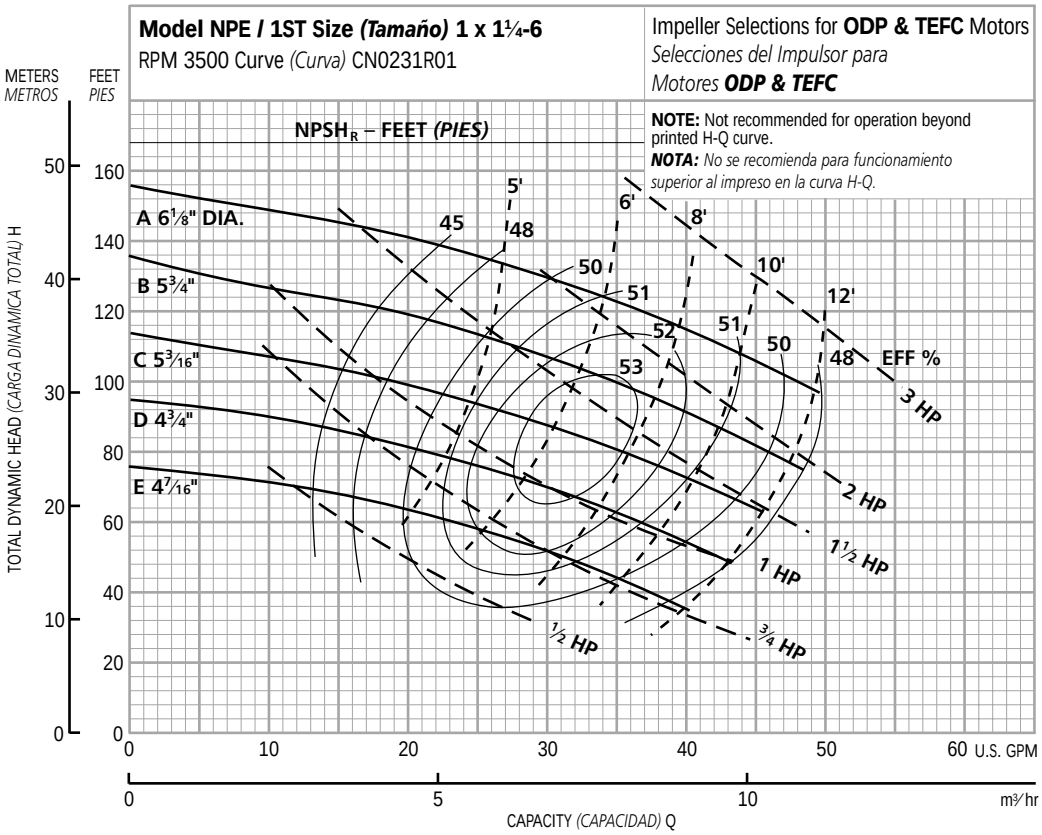

Ordering Code, *Código de Pedido*	Standard HP Rating, *Estándar HP Potencia*	Imp. Dia.
E	½	4⁷⁄₁₆"
D	¾	4¾
C	1	5³⁄₁₆
B	1½	5¾
A	2	6⅛

NOTE: Although not recommended, the pump may pass a ¹⁄₁₆" sphere.

NOTA: *Si bien no se recomienda, la bomba puede pasar una esfera de ¹⁄₁₆".*

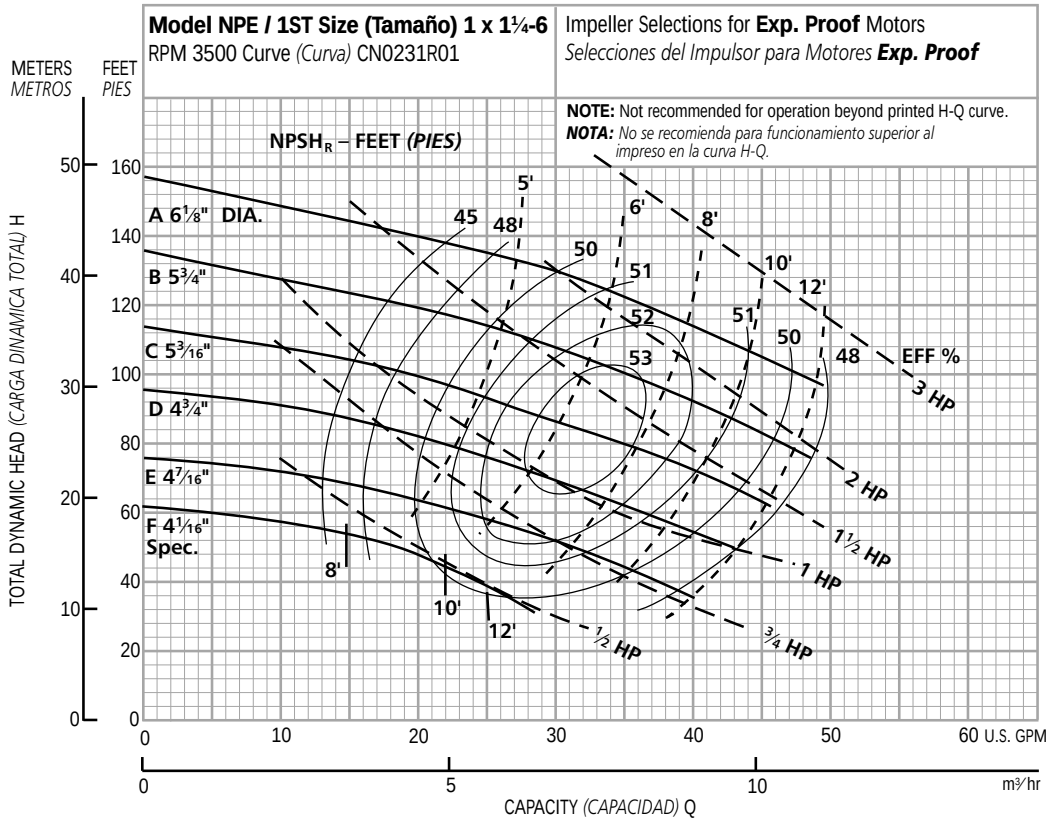

Ordering Code, *Código de Pedido*	Standard HP Rating, *Estándar HP Potencia*	Imp. Dia.
F	½	4¹⁄₁₆" spec.
E	¾	4⁷⁄₁₆
D	1	4¾
C	1½	5³⁄₁₆
B	2	5¾
A	3	6⅛

NOTE: Although not recommended, the pump may pass a ¹⁄₁₆" sphere.

NOTA: *Si bien no se recomienda, la bomba puede pasar una esfera de ¹⁄₁₆".*

Performance Curves – 60 Hz, 3500 RPM
Curvas de Funcionamiento – 60 Hz, 3500 RPM

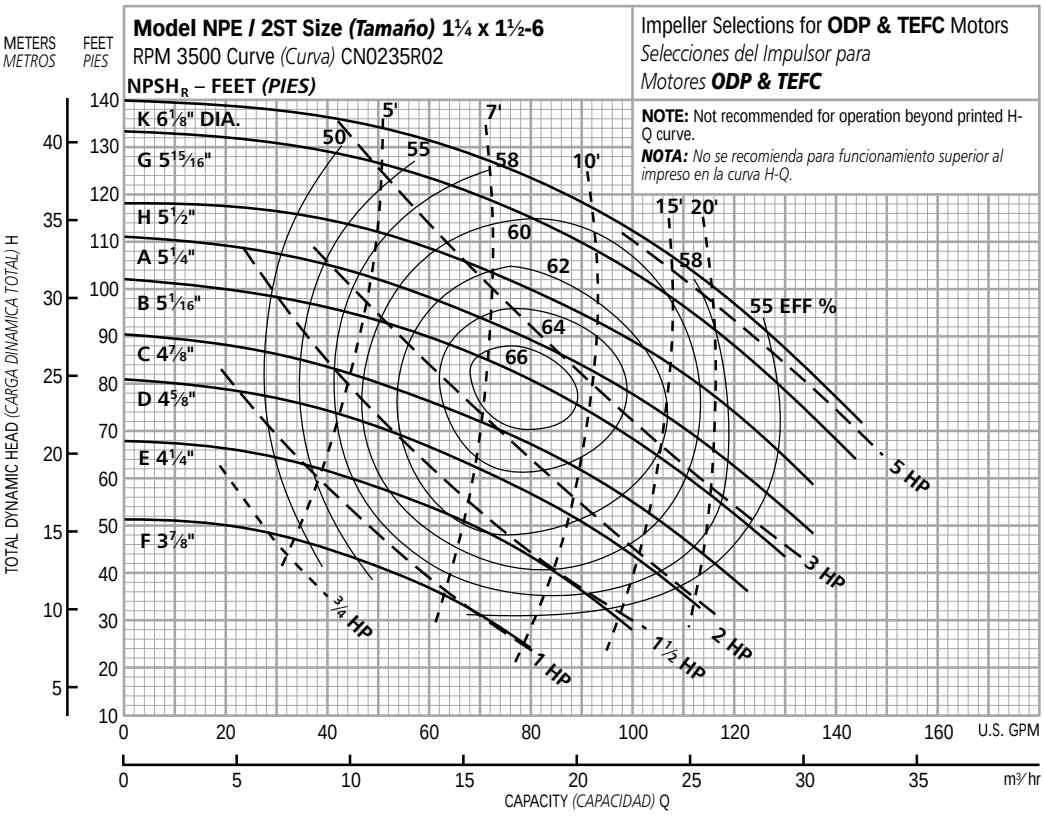

Ordering Code, *Código de Pedido*	Standard HP Rating, *Estándar HP Potencia*	Imp. Dia.
F	¾	3⅞"
E	1	4¼
D	1½	4⅝
C	2	4⅞
B	3	5 1/16
A	3	5¼
H	5	5½
G	5	5 15/16
K	5	6⅛

NOTE: Although not recommended, the pump may pass a 3/16" sphere.

NOTA: *Si bien no se recomienda, la bomba puede pasar una esfera de 3/16".*

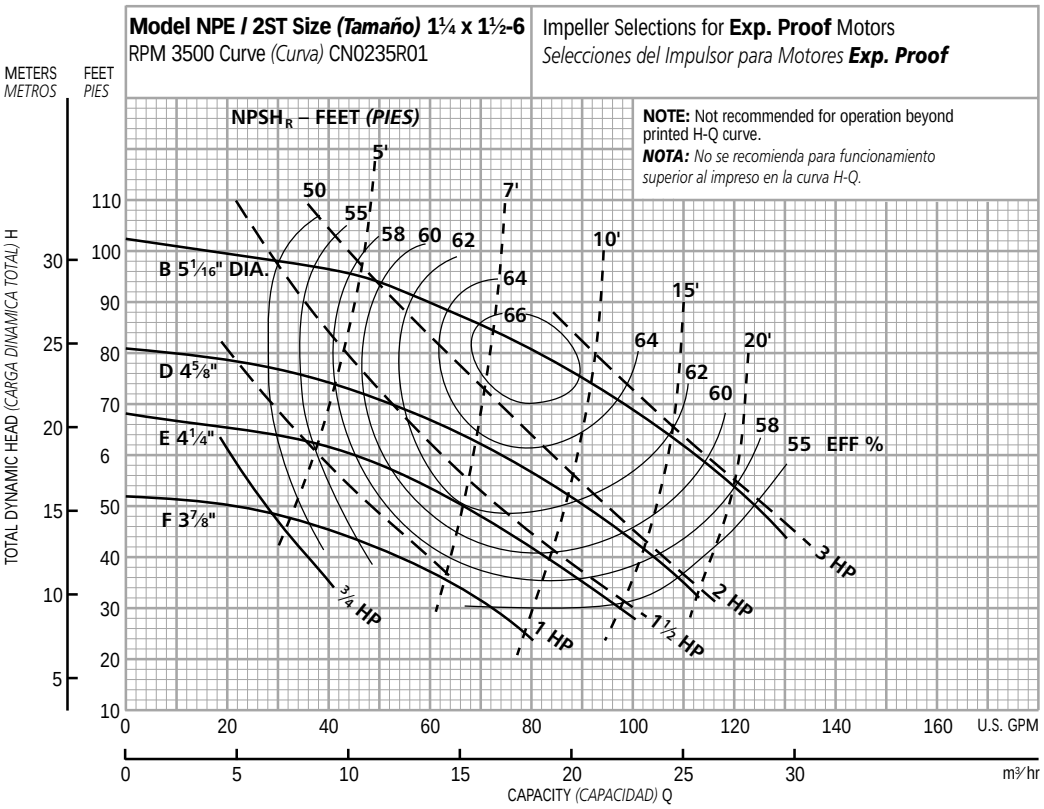

Ordering Code, *Código de Pedido*	Standard HP Rating, *Estándar HP Potencia*	Imp. Dia.
F	1	3⅞"
E	1½	4¼
D	2	4⅝
B	3	5 1/16

NOTE: Although not recommended, the pump may pass a 3/16" sphere.

NOTA: *Si bien no se recomienda, la bomba puede pasar una esfera de 3/16".*

Performance Curves – 60 Hz, 3500 RPM
Curvas de Funcionamiento – 60 Hz, 3500 RPM

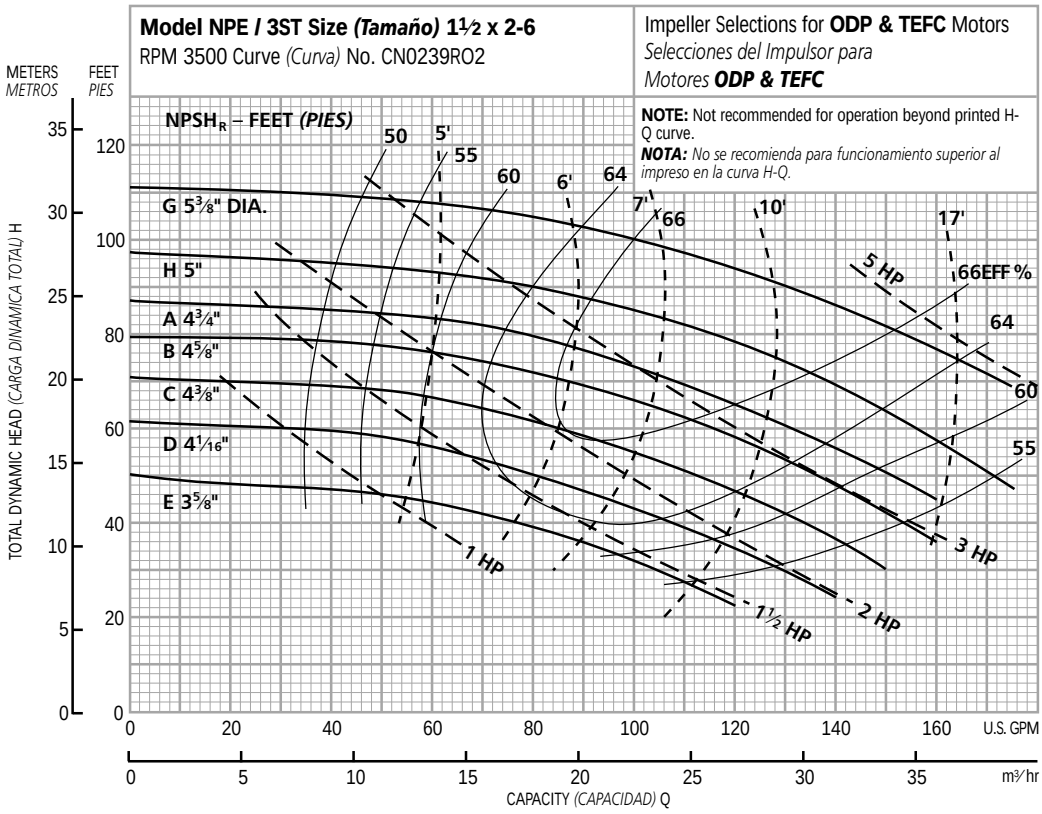

Ordering Code, *Código de Pedido*	Standard HP Rating, *Estándar HP Potencia*	Imp. Dia.
E	1	3⅝"
D	1½	4¹⁄₁₆
C	2	4⅜
B	3	4⅝
A	3	4¾
H	5	5
G	5	5⅜

NOTE: Although not recommended, the pump may pass a ¹¹⁄₃₂" sphere.

NOTA: *Si bien no se recomienda, la bomba puede pasar una esfera de ¹¹⁄₃₂".*

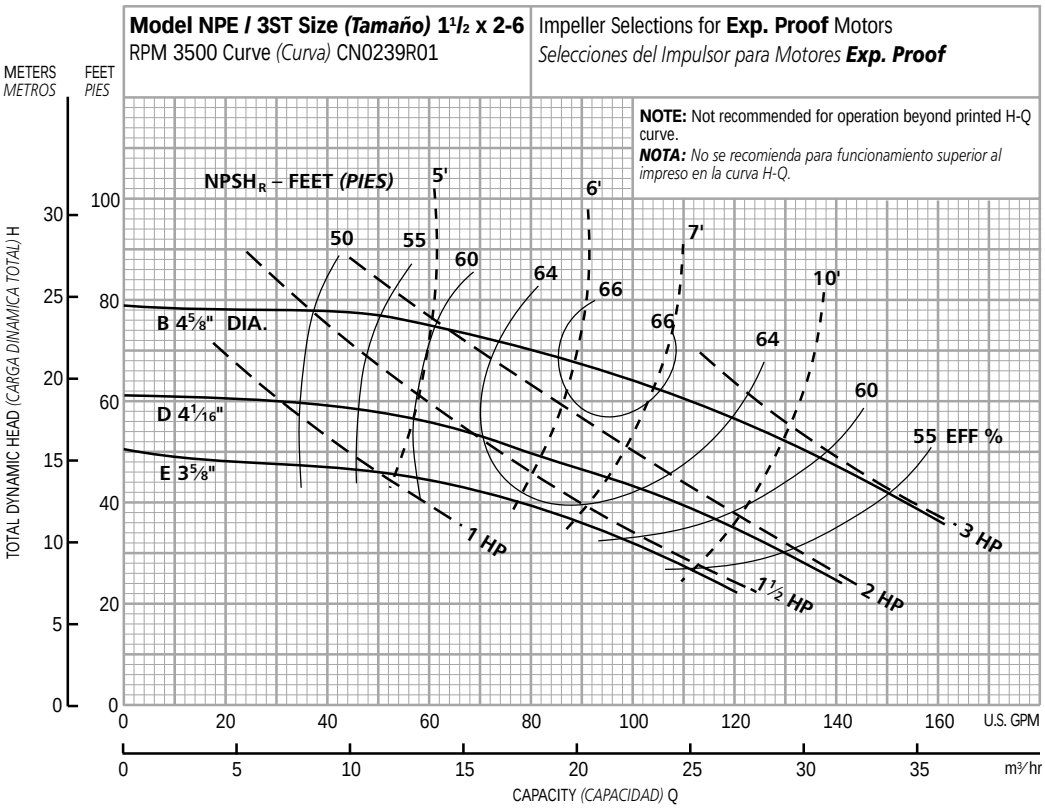

Ordering Code, *Código de Pedido*	Standard HP Rating, *Estándar HP Potencia*	Imp. Dia.
E	1½	3⅝"
D	2	4¹⁄₁₆
B	3	4⅝

NOTE: Although not recommended, the pump may pass a ¹¹⁄₃₂" sphere.

NOTA: *Si bien no se recomienda, la bomba puede pasar una esfera de ¹¹⁄₃₂".*

G&L Pumps

Repair Parts

MODEL

NPE/NPE-F

Goulds Pumps

ITT Industries

© 2003 G&L
Effective February, 2003
RNPE

TABLE OF CONTENTS

NPE END SUCTION

NPE Product Line Numbering System 1
NPE Seal Chart (Part of Numbering System) 1
Parts List 2
Optional Components 2
Pictorial Breakdown of Pump 3
Impeller Chart Standard Impeller by Impeller Code 4
Impeller Chart by Motor Size at 3500 RPM 4
Motor Chart 5

NOTE:
For units built before September, 1997
The following upgrades are interchangeable.

(1) Item 349 Guidevane O-Ring was upgraded from O-Ring to Square Seal Ring.

(2) Pump Components have been upgraded from 304 SS to 316L SS

(3) Mechanical Seal upgrades as noted on page 1

(4) Pump Mounting location for motor adapter with foot to pump support are interchangeable.

NPE/NPE-F NUMBERING SYSTEM

1 ST 2 C 1 A 4 F

SEAL VENT/FLUSH OPTION

MECHANICAL SEAL and O-RING
4 = Pre-Engineered Standard
For Optional Mechanical Seal modify catalog order no. with Seal Code listed below.

21 Mechanical Seal (⅝" seal)						
Seal Code	**Rotary**	**Stationary**	**Elastomers**	**Metal Parts**	**Part No.**	**Casing O-Ring**
2	Carbon	Sil-Carbide	EPR	316 SS	10K18*	EPR
4			Viton		10K55***	Viton
5	Sil-Carbide		EPR		10K81	EPR
6			Viton		10K62**	Viton

Note: *Replaces obsolete 10K56 **Replaces obsolete 10K29 ***Replaces obsolete 10K46 and 10K24

Impeller Option Code . . . No Adder Required
For Optional Impeller Diameters modify catalog order no. with Impeller code listed below.
Select Optional Impeller Diameter from Pump Performance Curve.

Impeller Code	Pump Size		
	1 x 1¼-6	**1¼ x 1½-6**	**1½ x 2-6**
	Diameter	**Diameter**	**Diameter**
K		6⅛	
G		5 15/16	5⅜
H		5½	5
A	6⅛	5¼	4¾
B	5¾	5 1/16	4⅝
C	5 3/16	4⅞	4⅜
D	4¾	4⅝	4 1/16
E	4 7/16	4¼	3⅝
F	4 1/16	3⅞	

Note: Not recommended for operation beyond printed H-Q curve.

For critical application conditions consult factory.

Note: Not all combinations of motor, impeller and seal options are available for every pump model. Please check with G&L on non-cataloged numbers.

DRIVER
1 = 1PH, ODP 4 = 1 PH, TEFC 7 = 3 PH, XP
2 = 3 PH, ODP 5 = 3 PH, TEFC 8 = 575 V, XP
3 = 575 V, ODP 6 = 575 V, TEFC 0 = 1 PH, XP

HP RATING
C = ½ HP F = 1½ HP J = 5 HP
D = ¾ HP G = 2 HP
E = 1 HP H = 3 HP

DRIVER: HERTZ/POLE/RPM
1 = 60 HZ, 2 pole, 3500 RPM
2 = 60 HZ, 4 pole, 1750 RPM
3 = 60 HZ, 6 pole, 1150 RPM
4 = 50 HZ, 2 pole, 2900 RPM
5 = 50 HZ, 4 pole, 1450 RPM

MATERIAL
ST = Stainless Steel

PUMP SIZE
1 = 1 x 1¼ - 6 2 = 1¼ x 1½ - 6 3 = 1½ x 2 - 6

For Frame Mounted version, substitute the letters "FRM" in these positions.

NPE STANDARD REPAIR PARTS LIST

Item No.	Description	Materials of Construction	1ST 1 x 1¼	2ST 1¼ x 1½	3ST 1½ x 2	QTY.
100	Casing	AISI 316L SS	1L81	1L82	1L83	1
101	Impeller		See Impeller chart on page 4			1
108A	Motor adapter with foot		1L80			1
108B	Motor adapter less foot		1L87			
108C	Motor adapter with foot & flush		1L334			
108D	Motor adapter less foot with flush		1L335			
123	Deflector	BUNA-N	5K7			1
184A	Seal housing standard	AISI 316L SS	1L79			1
184B	Seal housing with seal flush		1L333			
240	Motor support	300 SS	4L320			1
	Rubber channel	Rubber	9K188			1
304	Impeller locknut	AISI 316 SS	13K286			1
347	Guidevane	AISI 316L SS	3L23	3L24	3L25	1
349	Seal ring, guidevane	Viton standard	5K269	5K270		1
		EPR	5K273	5K274		
		BUNA	5K271	5K272		
370	Socket head screw, casing	AISI 410 SS	13L65			8
371	Bolts, motor	Steel/plated	13K252			4
383	Mechanical seal		See Mechanical Seal Chart on Page 1			1
408	Drain and vent plug, casing	AISI 316 SS	6L3			2
412B	O-ring, drain plugs	Viton, standard	5L99			2
		EPR	5L80			
		BUNA	5L62			
513	O-ring, casing	Viton standard	5K206			1
		EPR	5K193			
		BUNA	5K4			
575	Pipe Cap	304 SS	6K150			1

NOTE:
OPTIONAL SEAL FLUSH COMPONENTS

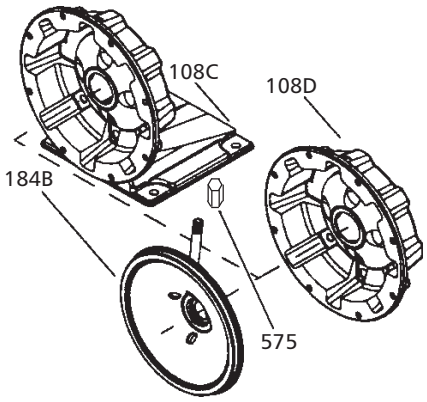

NOTE:
Close coupled units supplied with ½ HP 1750 RPM, ½ - 3 HP Explosion Proof or 5 HP motors, utilize motor adapter less foot and a footed motor.

NOTE:
Frame mounted units (NPE-F) utilize the XS Power Frame and motor adapter less foot. For repair parts for the power frame refer to the XS-Power frame repair parts page in the parts section of your catalog. To order the power frame complete order item 14L61.

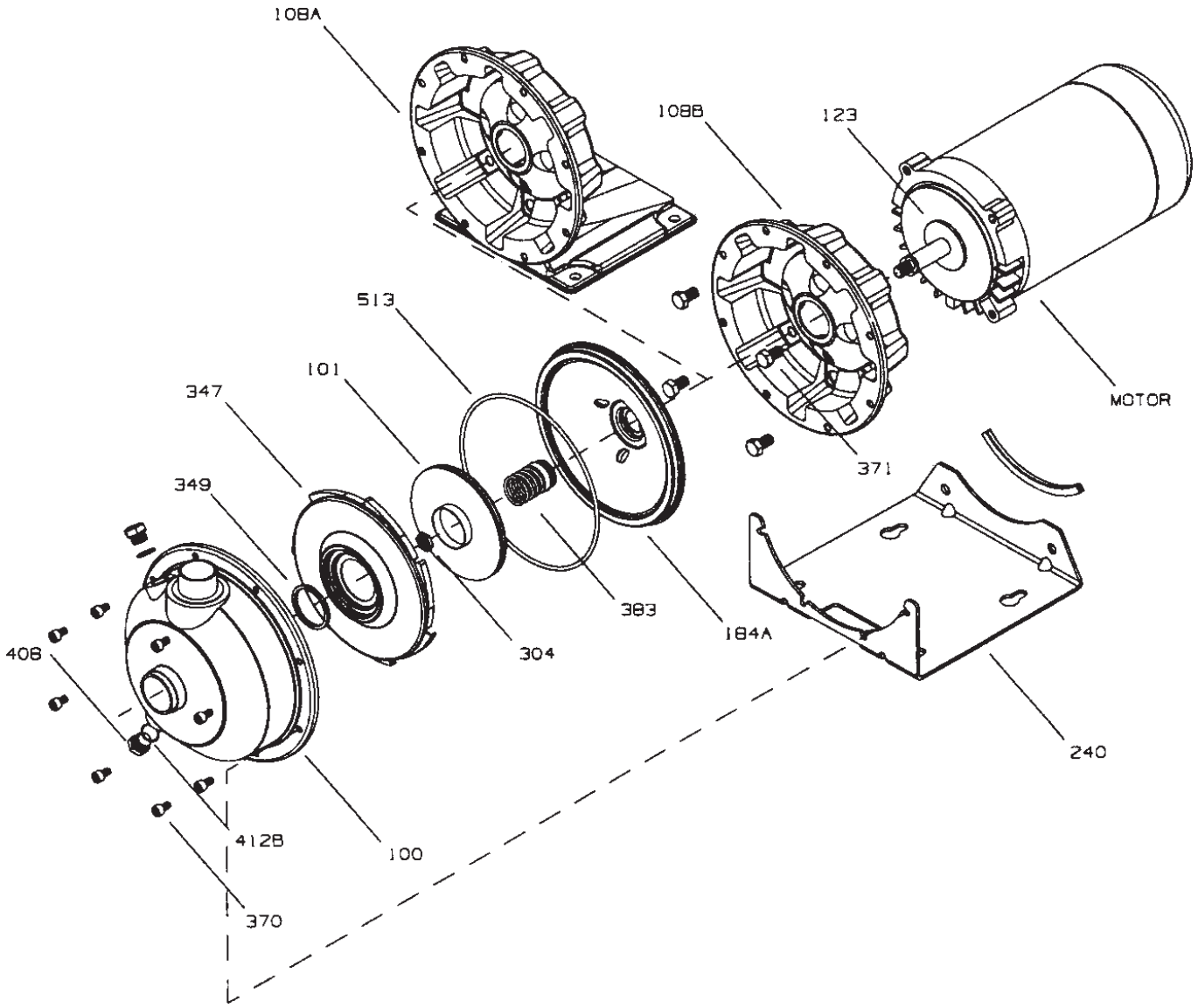

NPE STANDARD IMPELLERS

Impeller Code	Pump Size					
	1 x 1¼-6		1¼ x 1½-6		1½ x 2-6	
	Diameter	Part No.	Diameter	Part No.	Diameter	Part No.
K			6⅛	2L885		
G			5 15/16	2L700	5⅜	2L702
H			5½	2L699	5	2L701
A	6⅛	2L47	5¼	2L48	4¾	2L49
B	5¾	2L44	5 1/16	2L54	4⅝	2L58
C	5 3/16	2L46	4⅞	2L53	4⅜	2L57
D	4¾	2L42	4⅝	2L52	4 1/16	2L56
E	4 7/16	2L45	4¼	2L51	3⅝	2L55
F	4 1/16	2L59	3⅞	2L50		

NPE STANDARD IMPELLERS BY MOTOR SIZE AT 3500 RPM

For ODP/TEFC Units Built After September 1, 1997

HP	HP Code		1ST	2ST		3ST
			ODP/TEFC	ODP/TEFC		ODP/TEFC
½	C	Repair #	2L45			
		Dia.	4 7/16			
		Imp. Code	E			
¾	D	Repair #	2L42	2L50		
		Dia.	4¾	3⅞		
		Imp. Code	D	F		
1	E	Repair #	2L46	2L51		2L55
		Dia.	5 3/16	4¼		3⅝
		Imp.Code	C	E		E
1½	F	Repair #	2L44	2L52		2L56
		Dia.	5¾	4⅝		4 1/16
		Imp. Code	B	D		D
2	G	Repair #	2L47	2L53		2L57
		Dia.	6⅛	4⅞		4⅜
		Imp. Code	A	C		C
3	H	Repair #	2L47	2L48		2L49
		Dia.	6⅛	5¼		4¾
		Imp. Code	A	A		A
5	J	Repair #		2L700	2L885	2L702
		Dia.		5 15/16	6⅛	5⅜
		Imp. Code		G	K	G

For Current Explosion Proof and All Units Built Before September 1, 1997

HP	HP Code		1ST		2ST		3ST	
			ODP	TEFC/EXP	ODP	TEFC/EXP	ODP	TEFC/EXP
½	C	Repair #	2L45	2L59				
		Dia.	4 7/16	4 1/16				
		Imp. Code	E	F				
¾	D	Repair #	2L42	2L45	2L50			
		Dia.	4¾	4 7/16	3⅞			
		Imp. Code	D	E	F			
1	E	Repair #	2L46	2L42	2L51	2L50	2L55	
		Dia.	5 3/16	4¾	4¼	3⅞	3⅝	
		Imp. Code	C	D	E	F	E	
1½	F	Repair #	2L44	2L46	2L52	2L51	2L56	2L55
		Dia.	5¾	5 3/16	4⅝	4¼	4 1/16	3⅝
		Imp. Code	B	C	D	E	D	E
2	G	Repair #	2L47	2L44	2L53	2L52	2L57	2L56
		Dia.	6⅛	5¾	4⅞	4⅝	4⅜	4 1/16
		Imp. Code	A	B	C	D	C	D
3	H	Repair #	2L47	2L47	2L48	2L54	2L49	2L58
		Dia.	6⅛	6⅛	5¼	5 1/16	4¾	4⅝
		Imp. Code	A	A	A	B	A	B
5	J	Repair #			2L700 2L885		2L702	
		Dia.			5 15/16 6⅛		5⅜	
		Imp. Code			G K		G	

Note:** Max. Explosion Proof rating is 2 HP.

NPE CLOSE-COUPLED MOTORS

MODEL NPE 3500 RPM

HP	Single-Phase, 60 Hz, 115/230 V**, 56J Frame								
	Open, Drip-Proof①			Totally Enclosed, Fan Cooled			Explosion Proof		
	Order No.	Max. Amps	Wt. (lbs.)	Order No.	Max. Amps	Wt. (lbs.)	Order No.	Max. Amps	Wt. (lbs.)
½	E04853S	10.0/5.0	16	E04821	6.2/3.1	21	BBC04825	6.2/3.1	47
¾	E05853S	14.0/7.0	19	E05821	8.8/4.4	24	BBC05825	8.8/4.4	41
1	E06853S	16.0/8.0	22	E06821	11.6/5.8	26	BBC06825	11.6/5.8	49
1½	E07858S	21.4/10.7	31	E07821	16.2/8.1	35	BBC07825	16.2/8.1	56
2	E08854	26.8/13.4	36	E08821	20.8/10.4	39	BBC08825	20.8/10.4	60
3	E09854	14.0	40	E09821	11.89	44			
5	E10754	14.4	55						

Note:** 3 and 5 HP Single-Phase motors are 230 V only.

HP	Three-Phase, 60 Hz, 208-230/460 V, 56J Frame								
	Open, Drip-Proof①			Totally Enclosed, Fan Cooled			Explosion Proof		
	Order No.	Max. Amps	Wt. (lbs.)	Order No.	Max. Amps	Wt. (lbs.)	Order No.	Max. Amps	Wt. (lbs.)
½	E04873	2.6/1.3	19	E04876	1.9/.95	18	BBC04875	1.9/.95	27
¾	E05873	3.4/1.7	19	E05876	2.3/1.15	21	BBC05875	2.3/1.15	30
1	E06873	4.2/2.1	22	E06876	3.2/1.6	21	BBC06875	3.2/1.6	30
1½	E07878	5.8/2.9	25	E07876	4.8/2.4	27	BBC07875	4.8/2.4	37
2	E08874	6.9/3.3	39	E08876	5.4/2.7	33	BBC08875	5.4/2.7	44
3	E09874	7.2/3.6	31	E09876	7.6/3.8	37			
5	E10774	7.2/14.4	50	E10876	6.2/12.4	48			

① For vertical mounting order motor canopy separately - 9K272 for ½, ¾ and 1 HP single phase or 9K273 for all other ODP motors.

MODEL NPE 1750 RPM

HP	Single-Phase, 60 HZ, 115/230 V, 56J Frame								
	Open, Drip-Proof①			Totally Enclosed, Fan Cooled			Explosion Proof		
	Order No.	Max. Amps	Wt. (lbs.)	Order No.	Max. Amps	Wt. (lbs.)	Order No.	Max. Amps	Wt. (lbs.)
½	E04811	8.6/4.3	19	E04812	8.0/4.0	20	BBC04815	8.0/4.0	45

HP	Three-Phase, 60 HZ, 208-230/460 V, 56J Frame								
	Open, Drip-Proof①			Totally Enclosed, Fan Cooled			Explosion Proof		
	Order No.	Max. Amps	Wt. (lbs.)	Order No.	Max. Amps	Wt. (lbs.)	Order No.	Max. Amps	Wt. (lbs.)
½	E04831	3.76/4.0/2.0	20	E04832	1.77/1.6/.8	20	BBC04835	1.77/1.6/.8	45

Note: Explosion Proof Motors are class 1 and 2, Group D

Magnehelic® Differential Pressure Gage

OPERATING INSTRUCTIONS

SPECIFICATIONS

Dimensions: 4-3/4″ dia. x 2-3/16″ deep.

Weight: 1 lb. 2 oz.

Finished: Baked dark gray enamel.

Connections: 1/8″ NPT high and low pressure taps, duplicated, one pair side and one pair back.

Accuracy: Plus or minus 2% of full scale, at 70°F. (Model 2000-0, 3%; 2000-00, 4%).

Pressure Rating: 15 PSI (0,35 bar)

Ambient Temperature Range: 20° to 140°F (-7 to 60°C).

Standard gage accessories include two 1/8″ NPT plugs for duplicate pressure taps, two 1/8″ NPT pipe thread to rubber tubing adapters, and three flush mounting adapters with screws.

Caution: For use with air or compatible gases only.

For repeated over-ranging or high cycle rates, contact factory.

Not for use with Hydrogen gas. Dangerous reactions will occur.

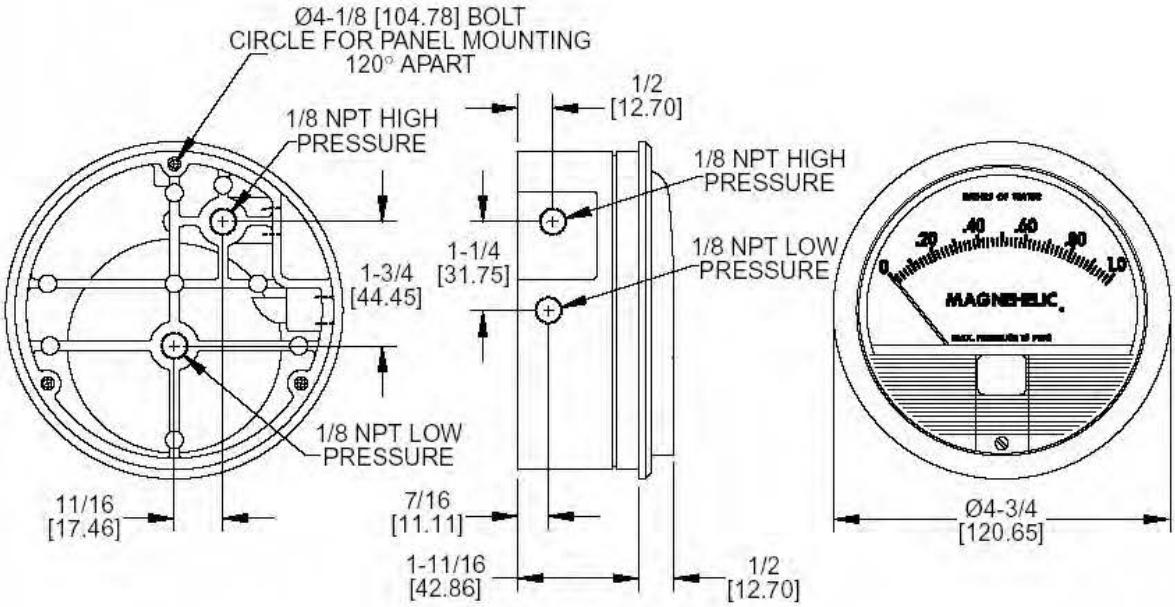

DWYER INSTRUMENTS, INC.
P.O. BOX 373 • MICHIGAN CITY, INDIANA 46361 U.S.A.

Phone: 219/879-8000
Fax: 219/872-9057
Lit-by-Fax: 888/891-4963

www.dwyer-inst.com
e-mail: info@dwyer-inst.com

MAGNEHELIC® INSTALLATION

1. Select a location free from excessive vibration and where the ambient temperature will not exceed 140°F. Also, avoid direct sunlight which accelerates discoloration of the clear plastic cover. Sensing lines my be run any necessary distance. Long tubing lengths will not affect accuracy but will increase response time slightly. Do not restrict lines. If pulsating pressures or vibration cause excessive pointer oscillation, consult the factory for ways to provide additional damping.

2. All standard Magnehelic gages are calibrated with the diaphragm vertical and should be used in that position for maximum accuracy. If gages are to be used in other than vertical position, this should be specified on the order. Many higher range gages will perform within tolerance in other positions with only rezeroing. Low range Model 2000-00 and metric equivalents must be used in the vertical position only.

3. Surface Mounting

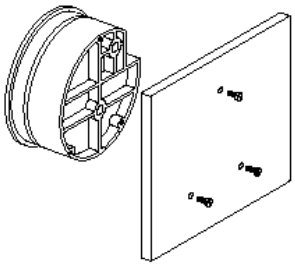

Locate mounting holes, 120° apart on a 4-1/8″ dia. circle. Use No. 6-32 machine screws of appropriate length.

4. Flush Mounting

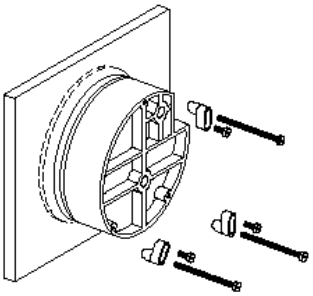

Provide a 4-9/16″ dia. opening in panel. Insert gage and secure in place with No. 6-32 machine screws of appropriate length, with adapters, firmly secured in place. To mount gage on 1-1/4″-2″ pipe, order optional A-610 pipe mounting kit.

5. To zero the gage after installation

Set the indicating pointer exactly on the zero mark, using the external zero adjust screw on the cover at the bottom. Note that the zero check or adjustment can only be made with the high and low pressure taps both open to atmosphere.

Operation

Positive Pressure: Connect tubing from source of pressure to either of the two high pressure ports. Plug the port not used. Vent one or both low pressure ports to atmosphere.

Negative Pressure: Connect tubing from source of vacuum or negative pressure to either of the two low pressure ports. Plug the port not used. Vent one or both high pressure ports to atmosphere.

Differential Pressure: Connect tubing from the greater of two pressure sources to either high pressure port and the lower to either low pressure port. Plug both unused ports.

When one side of the gage is vented in dirty, dusty atmosphere, we suggest an A-331 Filter Vent Plug be installed in the open port to keep inside of gage clean.

A. For portable use of temporary installation use 1/8″ pipe thread to rubber tubing adapter and connect to source of pressure with rubber or Tygon tubing.

B. For permanent installation, 1/4″ O.D., or larger, copper or aluminum tubing is recommended. See accessory bulletin S-101 for fittings.

Ordering Instructions:

When corresponding with the factory regarding Magnehelic® gage problems, be sure to include model number, pressure range, and any special options. Field repair is not recommended; contact the factory for repair service.

MAINTENANCE

Maintenance: No lubrication or periodic servicing is required. Keep case exterior and cover clean. Occasionally disconnect pressure lines to vent both sides of gage to atmosphere and re-zero. Optional vent valves, (bulletin S-101), should be used in permanent installations.

Calibration Check: Select a second gage or manometer of known accuracy and in an appropriate range. Using short lengths of rubber or vinyl tubing, connect the high pressure side of the Magnehelic gage and the test gage to two legs of a tee. Very slowly apply pressure through the third leg. Allow a few seconds for pressure to equalize, fluid to drain, etc., and compare readings. If accuracy unacceptable, gage may be returned to factory for recalibration. To calibrate in the field, use the following procedure.

Calibration:

1. With gage case, held firmly, loosen bezel, by turning counterclockwise. To avoid damage, a canvas strap wrench or similar tool should be used.
2. Lift out plastic cover and "O" ring.
3. Remove scale screws and scale assembly. Be careful not to damage pointer.
4. The calibration is changed by moving the clamp. Loosen the clamp screw(s) and move slightly toward the helix if gage is reading high, and away if reading low. Tighten clamp screw and install scale assembly.
5. Place cover and O-ring in position. Make sure the hex shaft on inside of cover is properly engaged in zero adjust screw.
6. Secure cover in place by screwing bezel down snug. Note that the area under the cover is pressurized in operation and therefore gage will leak if not properly tightened.
7. Zero gage and compare to test instrument. Make further adjustments as necessary.

Caution: If bezel binds when installing, lubricate threads sparingly with light oil or molybdenum disulphide compound.

Warning: Attempted field repair may void your warrenty. Recalibration or repair by the user is not recommended. For best results, return gage to the factory. Ship prepaid to:

Dwyer Instruments, Inc.

Attn: Repair Dept.

102 Indiana Highway 212

Michigan City, IN 46360

Trouble Shooting Tips:

•*Gage won't indicate or is sluggish.*

1. Duplicate pressure port not plugged.
2. Diaphragm ruptured due to overpressure.
3. Fittings or sensing lines blocked, pinched, or leaking.
4. Cover loose or "O"ring damaged, missing.
5. Pressure sensor, (static tips, Pitot tube, etc.) improperly located.
6. Ambient temperature too low. For operation below 20°F, order gage with low temperature, (LT) option.

•Pointer stuck-gage can't be zeroed.

1. Scale touching pointer.
2. Spring/magnet assembly shifted and touching helix.
3. **Metallic particles clinging to magnet and interfering with helix movement.**
4. Cover zero adjust shaft broken or not properly engaged in adjusting screw.

We generally recommend that gages needing repair be returned to the factory. Parts used in various sub-assemblies vary from one range of gage to another, and use of incorrect components may cause improper operation. After receipt and inspection, we will be happy to quote repair costs before proceeding.

Consult factory for assistance on unusual applications or conditions.

Use with air or compatible gases only.

©Copyright 2001 Dwyer Instruments, Inc.
Printed in U.S.A. 4/01 FR# 12-440212-00 Rev. 3

DWYER INSTRUMENTS, INC.
P.O. BOX 373 • MICHIGAN CITY, INDIANA 46361 U.S.A.
Phone: 219/879-8000
Fax: 219/872-9057
Lit-by-Fax: 888/891-4963
www.dwyer-inst.com
e-mail: info@dwyer-inst.com

QED p/n EZ-LOWP - Dwyer p/n 1950-1

Kit Includes Pressure Switch, Fitting, Barb & Tubing

Series 1950 – Explosion-Proof Differential Pressure Switches

Specifications - Installation and Operating Instructions

Series 1950 Explosion-Proof Differential Pressure Switches combine the best features of the Dwyer Series 1900 Pressure Switch with an integral explosion-proof and weather-proof housing. Each unit is UL & CSA listed; FM approved for use in Class I, Groups C & D; Class II, Groups E, F, & G; and Class III atmospheres (NEMA 7 & 9). They are totally rain-tight for outdoor installations. Twelve models allow set-points from .03 to 20 inches w.c. and from .5 to 50 psi (3.4 to 345 kPa).

Easy access to the SPDT switch for electrical hook-up is provided by removing the top plate of the three-part aluminum housing. Adjustment to the set point of the switch can be made without disassembling the housing. The unit is very compact, about half the weight and bulk of equivalent conventional explosion-proof switches.

CAUTION
For use only with air or compatible gases. Use of the Model 1950 switch with explosive media connected to the Low pressure port (including differential pressure applications in such media) is not recommended. Switch contact arcing can cause an explosion inside the switch housing which, while contained, may render the switch inoperative. If switch is being used to sense a single positive pressure relative to atmosphere, run a line from the low pressure port to a non-hazardous area free of combustible gases. This may increase response time on -0 and -00 models.

NOTE: The last number-letter combination in the model number identifies the switch's electrical rating (number) and diaphragm material (letter). The 2F combination is standard as described in the physical data above. In case of special models, a number 1 rating is the same as 2; a number 3 or 4 rating is 10A 125, 250, 480 VAC; 1/8 H.P. 125 VAC; 1/4 H.P. 250 VAC; a number 5 or 6 rating is 1A 125 VAC. Letter B indicates a Buna-N diaphragm; N = Neoprene; S = Silicone; and V = Viton®.

UL and CSA Listed, FM Approved For
CL. I GR. C, D - CL. II GR. E, F, G - CL. III

Series 1950 Switches
Operating ranges and deadbands

To order specify Model Number	Operating Range: Inches, W.C.	Approximate Dead Band	
		At Min. Set Point	At Max. Set Point
1950-02	0.03 to 0.10	0.025	0.05
1950-00	0.07 to 0.15	0.04	0.05
1950-0	0.15 to 0.5	0.10	0.15
1950-1	0.4 to 1.6	0.15	0.20
1950-5	1.4 to 5.5	0.3	0.4
1950-10	3.0 to 11.0	0.4	0.5
1950-20	4.0 to 20.0	0.4	0.6
Model Number	**Operating Range: PSI**	**Approximate Dead Band**	
		Min. Set Point	Max. Set Point
1950P-2	0.5 to 2.0	0.3 PSI	0.3 PSI
1950P-8	1.5 to 8.0	1.0 PSI	1.0 PSI
1950P-15	3.0 to 15.0	0.9 PSI	0.9 PSI
1950P-25	4.0 to 25.0	0.7 PSI	0.7 PSI
1950P-50	15.0 to 50	1.0 PSI	1.5 PSI

PHYSICAL DATA

Temperature Limits: -40° to 140°F (-40° to 60°C); 1950P-8, -15, -25, -50: 0° to 140°F (-17.8° to 60°C); 1950-02: - 30° to 130°F (-34.4° to 54.4°C).
Rated Pressure: 1950: 45 in. w.c. (0.1 bar); 1950P: 35 psi (2.4 bar); 1950P-50 only: 70 psi (4.8 bar).
Maximum Surge Pressure: 1950: 10 psi (0.7 bar); 1950P: 50 psi (3.4 bar); 1950P-50 only: 90 psi (6.2 bar).
Pressure Connections: 1/8″ NPT(F).
Electrical Rating: 15A, 125, 250, 480 volts, 60 Hz. AC Resistive 1/8 H.P. @ 125 volts, 1/4 H.P. @ 250 volts, 60 Hz. AC.
Wiring Connections: 3-screw type; common, normally open and normally closed.
Conduit Connections: 1/2″ NPT(F).
Set point adjustment: Screw type on top of housing, field adjustable.
Housing: Anodized cast aluminum.
Diaphragm: Molded fluorosilicone rubber, 02 model: silicone on Nylon.
Calibration Spring: Stainless Steel
Installation: Mount with diaphragm in vertical position.
Weight: 3 1/4 lbs (1.5 kg), 02 model; 4 lbs, 7 oz. (2 kg).

RESPONSE TIME: Because of restrictive effect of flame arrestors, switch response time may be as much as 10-25 seconds where applied pressures are near set point.

DWYER INSTRUMENTS, INC.
P.O. BOX 373 • MICHIGAN CITY, INDIANA 46361, U.S.A.
Phone: 219/879-8000 **www.dwyer-inst.com**
Fax: 219/872-9057 **e-mail: info@dwyer-inst.com**
Lit-By Fax: 888/891-4963

Series 1950 – Explosion-Proof Differential Pressure Switches

Specifications - Installation and Operating Instructions

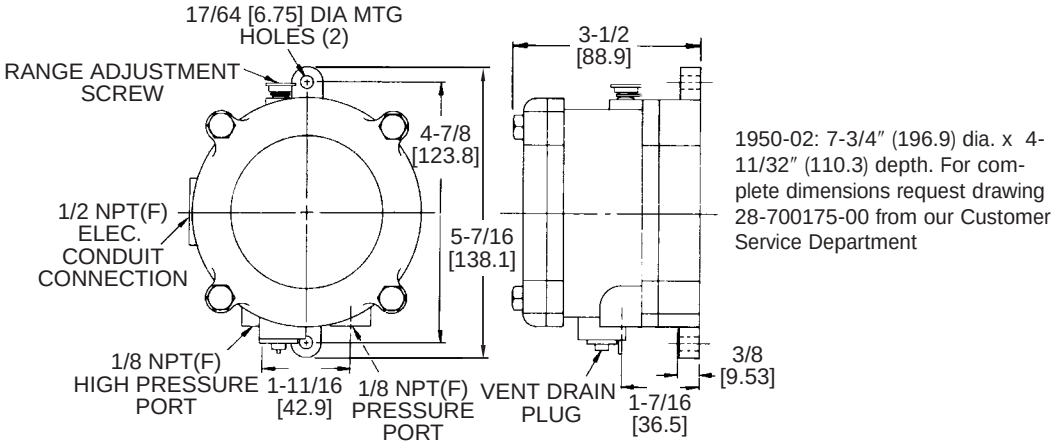

1950 Switch Outline Dimensions

INSTALLATION

1. Select a location free from excess vibration and corrosive atmospheres where temperatures will be within the limits noted under Physical Data on page 1. Switch may be installed outdoors or in areas where the hazard of explosion exists. See page 1 for specific types of hazardous service.

2. Mount standard switches with the diaphragm in a vertical plane and with switch lettering and Dwyer nameplate in an upright position. Some switches are position sensitive and may not reset properly unless they are mounted with the diaphragm vertical.

3. Connect switch to source of pressure, vacuum or differential pressure. Metal tubing with 1/4″ O.D. is recommended, but any tubing which will not restrict the air flow can be used. Connect to the two 1/8″ NPT(F) pressure ports as noted below:

A. Differential pressures - connect pipes or tubes from source of greater pressure to high pressure port marked HIGH PRESS, and from source of lower pressure to low pressure port marked LOW PRESS.

B. Pressure only (above atmospheric pressure) - connect tube from source of pressure to high pressure port. The low pressure port is left open to atmosphere.

C. Vacuum only (below atmospheric pressure) - connect tube from source of vacuum to low pressure port. The high pressure port is left open to atmosphere.

4. To make electrical connections, remove the three hex head screws from the cover and after loosening the fourth captive screw, swing the cover aside. Electrical connections to the standard single pole, double throw snap switch are provided by means of terminals marked “COM” (common), “NO” (norm open), “NC” (norm closed). The normally open contacts close and the normally closed contacts open when pressure increases beyond the set point. Switch loads for standard models should not exceed the maximum specified current rating of 15 amps resistive. Switch capabilities decrease with an increase in ambient temperature, load inductance, or cycling rate. Whenever an application involves one or more of these factors, the user may find it desirable to limit the switched current to 10 amps or less in the interest of prolonging switch life.

ADJUSTMENT: To Change the Set point

1. Remove the plastic cap and turn the slotted Adjust-ment Screw at the top of the housing clockwise to raise the set point pressure and counter-clockwise to lower the set point. After calibration, replace the plastic cap and re-check the set point.

2. The recommended procedure for calibrating or checking calibration is to use a “T” assembly with three rubber tubing leads, all as short as possible and the entire assembly offering minimum flow restriction. Run one lead to the pressure switch, another to a manometer of known accuracy and appropriate range, and apply pressure through the third tube. Make final approach to the set point very slowly. Note that manometer and pressure switch will have different response times due to different internal volumes, lengths of tubing, fluid drainage, etc. Be certain the switch is checked in the position it will assume in use, i.e. with diaphragm in a vertical plane and switch lettering and Dwyer nameplate in an upright position.

3. For highly critical applications check the set point adjustment and if necessary, reset it as noted in step A.

MAINTENANCE

The moving parts of these switches need no maintenance or lubrication. The only adjustment is that of the set point. Care should be taken to keep the switch reasonably clean. Periodically the vent drain plug should be rotated, then returned to its original position. This will dislodge deposits which could accumulate in applications where there is excessive condensation within the switch.

©Copyright 2001 Dwyer Instruments, Inc. Printed in U.S.A. 6/01 FR# 26-440332-00 Rev. 9

DWYER INSTRUMENTS, INC.
P.O. BOX 373 • MICHIGAN CITY, INDIANA 46361, U.S.A.
Phone: 219/879-8000 www.dwyer-inst.com
Fax: 219/872-9057 e-mail: info@dwyer-inst.com
Lit-By Fax: 888/891-4963

Form 237
Sheet P/N 7801165
Rev. B

Warrick®
Series M Mechanical Tilt Float Switch
Installation and Operation Bulletin

Specifications

Cord	16 gauge, 2 or 3 conductor SJOW, Oil Resistant CPE
Contact Rating	13 amp @ 120/240 VAC, 1/2hp
Contact Design	SPST, Normally Open or Normally Closed, Common with N.O. & N.C. (Form C)
Temperature Rating	32°F to 140°F (0°C to 60°C)
Overall Weight	1.0 lbs. (not including weight)
Tether Method	Tie-wrap nylon, weight: 2.5 lbs.
Approvals	U.L. Recognized, CSA Certified

Installation

Tether Tie-Wrap (Fig 1)

Attach cord, using a tie-wrap, to a stationary structure. This is known as the tether point, it will determine the pumping range. The farther the float is placed from the tether point, the greater the pumping range. The minimum distance that the float should be placed from the tether point is 3 inches.

Tether-Weight (Fig 2)

Place tension-brand over the cord before installation. Place the weight at the desired position and secure with the tension-band. This position will determine the pumping range. The farther the float is placed from the tether point, the greater the pumping range. The minimum distance that the float should be placed from the tether point is 3 inches.

Notes:

1. To Prevent Motor Burnout - In a pumpdown application make sure the turn-off level is at least 2 inches above the intake of the submersible pump.

2. Securing Tether Points - Make sure levels are correct and that floats are free from any obstructions before securing tether points.

3. When using Tether Weight - Place the tension-band over the cord prior to installation.

Determine tether point using charts below as a reference

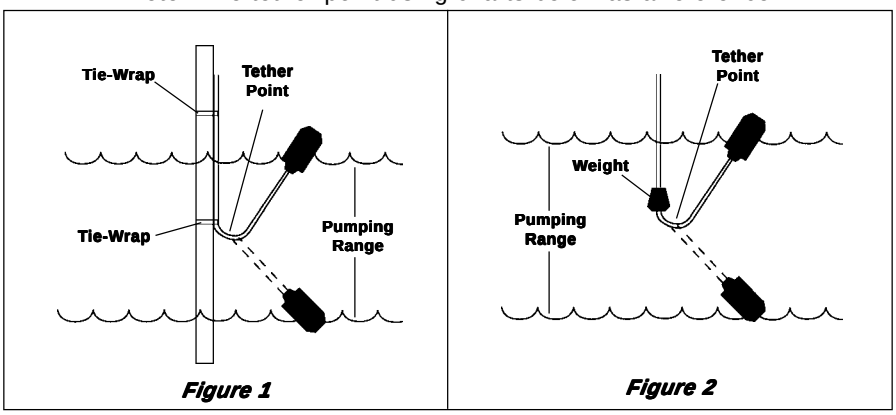

Figure 1 *Figure 2*

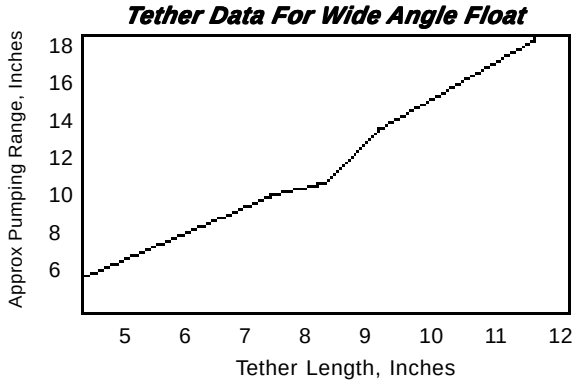

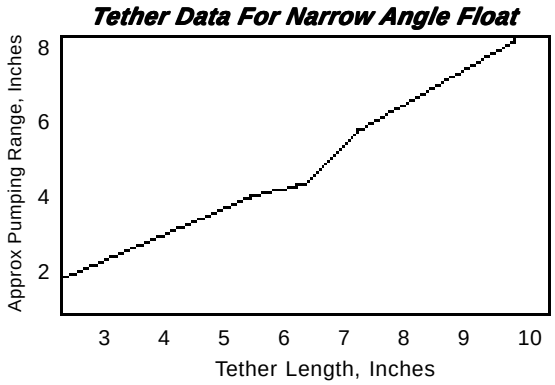

Notes:

1. Narrow angle pumping range is approximately 2 Ft. to 8 Ft.
2. Wide angle pumping range is approximately 5 Ft. to 18 Ft.

Dimensions

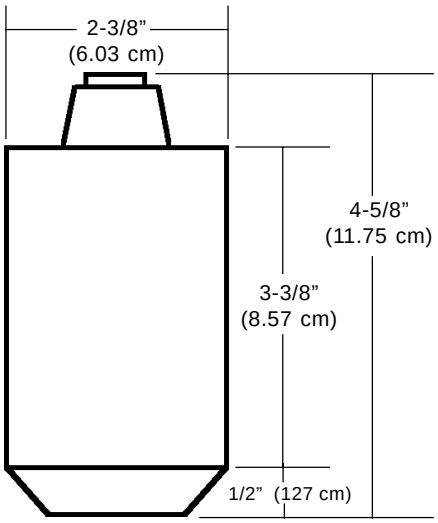

Contact Configurations

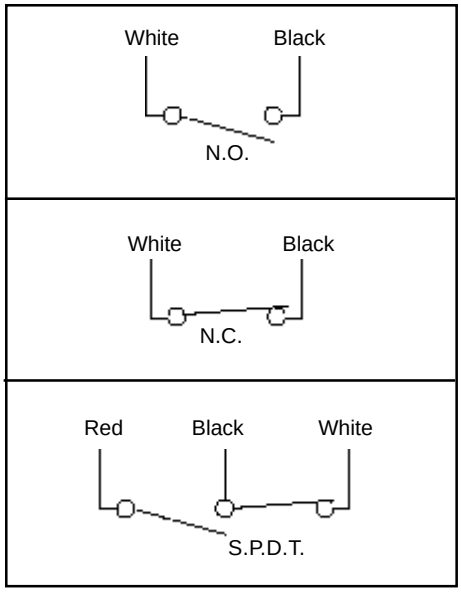

Important Points:

- Gems products must be maintained and installed in strict accordance with the National Electrical Code and the applicable Gems Product Instruction Bulletin that covers installation, operation and proper maintenance. Failure to observe this information may result in serious injury or damages.
- For hazardous area applications involving such things as, but not limited to, ignitable mixtures, combustible dust and flammable materials, use an appropriate explosionproof enclosure or intrinsically safe interface device.
- Please adhere to the pressure and temperature limitations shown throughout this catalog for our level and flow sensors. These limitations must not be exceeded. These pressures and temperatures take into consideration possible system surge pressures/temperatures and their frequencies.
- Selection of materials for compatibility with the media is critical to the life and operation of Gems products. Take care in the proper selection of materials of construction, testing is required.
- NSF-approved sensors are made of materials approved for potable water applica tions according to Standard 61.
- Stainless steel is generally regarded as safe by NSF and FDA.
- Life expectancy of switch contacts varies with application. Contact Gems if life cycle testing is required.
- Ambient temperature changes do affect switch set points, since the gravity of a liquid can vary with temperature.
- Our sensors have been designed to resist shock and vibration. However, shock and vibration should be minimized.
- Filter liquid media containing particulate and/or debris to ensure the proper operation of our products.
- Electrical entries and mounting points in an enclosed tank may require liquid/vapor sealing.
- Our sensors must not be field-repaired.
- Physical damage sustained by product may render it unserviceable.

Return Policy

Returns are accepted on stock items up to 30 days from date of order. You must contact our Returns Department for a Return Authorization (RA) number. Return the goods - freight prepaid - in the original container and include original packing slip. C. O. D. returns are not accepted. Gems reserves the right to apply restocking charges.

Tel: 860-793-4357
Fax: 860-793-4563

Gems Sensors Inc.
One Cowles Road
Plainville, CT 06062-1198
Tel: 860-793-4579
Fax: 860-793-4580

Attachment E

Flow Meters, Flow Sensors, Flow Totalizers

B2800 FLOW MONITOR

- For Gas or Liquid Meters -

PROGRAMMING AND INSTALLATION MANUAL

Advanced - Version 1.05

8635 Washington Ave.
Racine, Wisconsin 53406
Technical Toll-Free: 877.722.4631
Sales Toll-Free: 800.235.1638
Phone: 817.426.2888 Fax: 817.426.5303
www.blancett.com

TABLE OF CONTENTS

Introduction……..……..3

Features……...4

Specifications……..…….....5

Operating the Monitor……..…….....6

Advanced Programming Mode……..6
Programming……..…….….…...6
4-20 mA Programming...…….…..…….……11
Linearization……...13
Password……....……..……14
Battery Replacement……..16

Additional Input Options……...16

Wiring Diagram……..……17

Mounting Options……...19

Troubleshooting……...21

General Notes on Scaling……22

Part Numbering Information……25

Installation Drawing……26

Statement of Warranty……...27

Notice: *Blancett reserves the right to make any changes or improvements to the product described in this manual at any time without notice.*

INTRODUCTION

The B2800 Flow Monitor is a state-of-the-art, microprocessor based flow monitor, designed to provide the user with exceptional flexibility at a very affordable price. Though designed for use with Blancett Flow Meters, this display can be used with almost any flow meter producing a low amplitude AC output or contact closure signal(s).

This flow monitor is capable of accepting a low-level frequency input for calculating flow rate and total. These calculations can then be displayed in the desired units of measurement. All B2800 flow monitors come pre-calibrated, from the factory, if ordered with a Blancett Flow Meter. If required, however, it can easily be re-configured in the field. The monitor's large 8 digit by .75" numeric liquid crystal display makes extended range viewing practical. The second 8 digit by .38" alphanumeric display provides for selectable units viewing in run mode and prompts for variables in programming mode. Finally, the user can choose between displaying rate, total, or alternating between both rate and total.

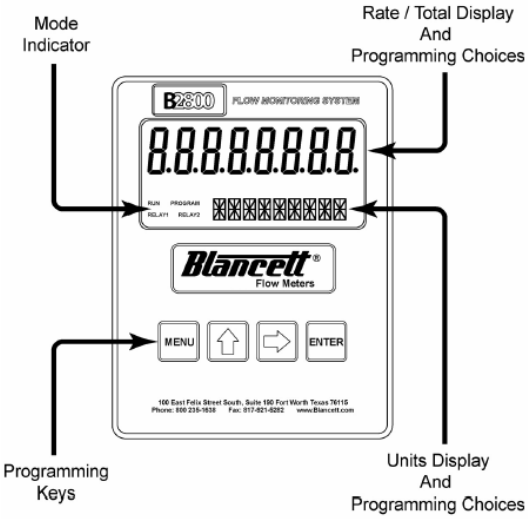

FEATURES

- Displays Rate and/or Total
- Large 0.75 Inch, 8 Digit Display for Easy Viewing
- Simple, Front Panel Programming
- Various Mounting Styles Available
- 10 Point Linearization Capability
- Gas Measurement Software Included
- NEMA 4X Suitable for Outdoor Mounting
- Intrinsically Safe
- Microprocessor Based, Low Power Components
- 2 Power Options – 1.5V “D” Size Battery or 4-20 mA Loop
- Automatic Decimal Point Locating
- Lead Zero Blinking
- Surface Mount Technology Use Throughout

SPECIFICATIONS

Power Supply Options:

Battery Powered: 1 “D” size 1.5 Volt alkaline battery
Loop Powered: 4-20 mA loop power

Power Consumption:

Battery Powered: Less than 1 milliwatt
Loop Powered: 25 mA (Maximum)

Alphanumeric Rate and Total Display:

8 digit, .75” high numeric display
8 character, .38” high alphanumeric display

Pulsed Output Signal:

Outputs one pulse for each increment of the least significant totalizer digit
Max. Voltage: 30Vdc
Pulse Type: Opto-Isolated open collector transistor
Pulse Width ON State: 0.9V drop @ 5.0mA or 0.7V drop @ 0.1A

Magnetic Pick-up Inputs:

Frequency Range: 0 to 3500 Hz
Trigger Sensitivity: 30 mV p-p
Over Voltage Protected: ±30 VDC

Frequency Measurement Accuracy: ±0.1%

Temperature Drift: 50 ppm / ºC (Max)

Analog Output (Loop Powered Version):

4-20 mA Current Loop
Resolution: 1:4000

Transient Overvoltages: Category 3, accordance with IEC664

Pollution Degree: 2, in accordance with IEC664

Mounting Classification:

Meter Mount: NEMA 4X Enclosure
Remote Mount: NEMA 4X Enclosure
Swivel Mount: NEMA 4X Enclosure

Environmental:

Operating Temperature: -22 ºF to 158 ºF (-30 ºC to 70 ºC)
Humidity: 0-90% Non-condensing

Certifications:

CSA: Class I, Div 1 Groups C, D; Class II, Div 1 Groups E, F, G
UL: Class I, II, III Div 1 Groups C, D
CE: IEC 61326-1

Units of Measure:

Gallons, Oil Barrels, Liters, Cubic Meters, MGal, Cubic FT, MCF, MMCF Megltrs, Acre FT, Liq. Barrels, LBS, KGS

Time Intervals: Day, Hour, Minute, Second

OPERATING THE MONITOR

The monitor has two modes of operation referred to as the **RUN** mode and the **PROGRAM** mode. Both the run mode and the program mode display screen enunciators confirming the state of the monitor. A quick glance at the lower left hand corner of the LCD screen will confirm operating status. Normal operation will be in the run mode. To access the programming mode, press the **MENU** button until the first programming screen is displayed. After programming the display with the necessary information, a lock out feature can be turned on to prevent unauthorized access or changing the meter's setup parameters.

ADVANCED PROGRAMMING MODE

Keys:

MENU – Switch between RUN & PROGRAMMING modes
UP Arrow – Scrolls through programming sub-menus in forward direction and increments numeric variables
RIGHT Arrow – Scrolls through programming sub-menus in reverse direction and moves the active digit to the right
ENTER – Used to enter sub-menus, save programming information and in the reset process

If your monitor was ordered with a Blancett flow meter, the two components ship from the factory, calibrated as a set. If the monitor is a replacement, the turbine's K-factor has changed, or the monitor is being used with some other pulse generating device, programming will be necessary.

Programming Using Pulse Output Turbine Flow Meters

Each turbine flow meter is shipped with either a K-factor value or frequency data. If frequency data is provided, the data must be converted to a K-factor before programming; otherwise, 10 Point Linearization must be used to program the monitor. (See "General Notes on Scaling" at the end of this manual). K-factor informa-

tion, when supplied, can usually be found on the neck of the flow meter or stamped on the body. The K-factor represents the number of pulses per unit of volume. The K-factor will be needed to program the monitor readout.

ENTER PROGRAMMING MODE – Change to programming mode by pressing the MENU button once. The mode indicator will change from RUN to PROGRAM.

> ***Note:*** *If any input value exceeds the meters capabilities for that particular parameter, the LIMIT indicator will begin to flash indicating an invalid entry. Press ENTER once to return to the parameter's entry screen to reenter the value.*

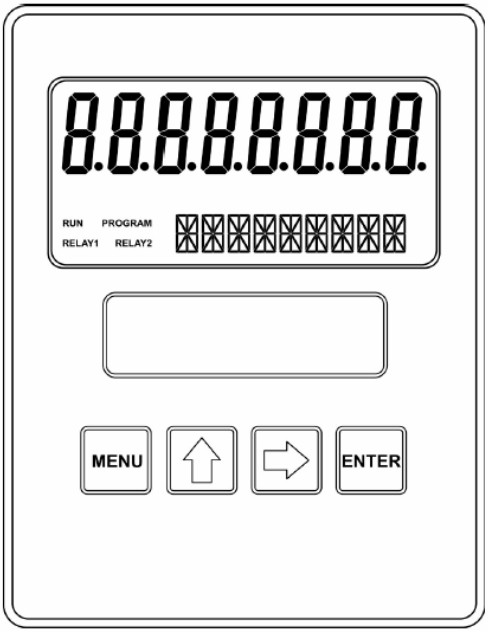

FIGURE 1 - FRONT PANEL

SELECT THE METER SIZE – At the METER prompt, press the ENTER button once. The current meter size number will begin to flash. Using the arrow keys, scroll through the size choices until you find the bore size of your meter. Press ENTER once to save the meter size choice.

> ***Note:*** *The meter connection size and the bore size are different. For example, many of the 1" NPT turbines have bore sizes that range from 3/8" up to 1". Be sure to use the correct bore size or the meter could report incorrect flows and totals.*

SELECT THE DISPLAY FUNCTION – The monitor can display RATE or TOTAL or alternate between BOTH rate and total. At the DISPLAY prompt, press the ENTER key once. The monitor now shows the display mode currently in effect. If the current selection is correct, press the ENTER key to advance to the next parameter. To change to an alternate display mode, use the arrow keys to scroll to the desired display mode and press ENTER to save the choice.

SELECT THE RATE UNITS OF MEASURE – The monitor allows the choice of many common rate units. (See the specifications for a complete listing of the unit choices.) At the RATE UNT prompt, press the ENTER key once. The monitor now shows the rate units of measure the display is currently set for. If the current selection is correct, press the ENTER key to advance to the next parameter. To change to an alternate unit, use the arrow keys to scroll to the desired rate unit and press ENTER to save the choice.

SELECT THE RATE [TIME] INTERVAL – The term Rate implies that something is occurring over a period of time. Most people are familiar with the rate of speed of a car reported in miles per hour (MPH). The same concept holds true for a flow meter. The time choices are SEC (seconds), MIN (minutes), HOUR (hours), and DAY (days). At the RATE INT prompt, press the ENTER key once. The monitor now shows the time interval the display is currently set for. If

the current selection is correct, press the ENTER key to advance to the next parameter. To change to an alternate time interval, use the arrow keys to scroll to the desired time interval and press ENTER to save the choice.

> ***Note:*** *If flow rate is the only measurement of interest, skip to KFAC UNT to complete the programming process.*

SELECT THE TOTAL UNITS OF MEASURE – If a flow amount is desirable, the units for the total must first be chosen. The monitor allows the choice of many common totalization units. (See the specifications for a complete listing.) At the TOTL UNT prompt, press the ENTER key once. The monitor now shows the total units of measure the display is currently set for. If the current selection is correct, press the ENTER key to advance to the next parameter. To change to an alternate unit, use the arrow keys to scroll to the desired totalization unit and press ENTER to save the choice.

> ***Note:*** *This unit of measure does not have to reflect the rate unit you have previously chosen. (Example: Rate Units = Gallons, Total Units = Barrels).*

SELECT THE TOTAL'S DISPLAY MULTIPLIER – The monitor has a very versatile display that has the ability to accumulate the flow total in multiples of ten. For example, if the most desirable totalization unit is 1,000 gallons, the monitor can easily be set up for this requirement. Once the unit is back in RUN mode, every time the total display is incremented by one digit the actual total would be an additional 1,000 gallons. At 1,000 gallons the total display would read 1, at 3,000 gallons the total display would read 3, etc. This feature eliminates having to look at a total, counting the digits and mentally inserting commas for each 1000 multiple.

At the TOTL MUL [Multiple] prompt, press the ENTER key once. The monitor now shows the multiplier the total display

is currently set for. If the current selection is correct, press the ENTER key to advance to the next parameter. To change to an alternate multiplier, use the arrow keys to scroll to the desired multiplier unit and press ENTER to save the choice.

Multiplier Choices – 0.01, 0.1, 1, 10, 100, 1000, 10000, 100000, and 1000000 Units

ENTER THE METER'S K-FACTOR UNIT – At the KFAC UNT prompt, press the ENTER key once. The display now shows the current K-factor unit. If the current selection is correct, press the ENTER key to advance to the next parameter. For meters calibrated in gallons use PUL/GAL. For meters calibrated in cubic meters use PUL/M3 (pulses per cubic meter), etc. To change to an alternate K-factor unit, use the arrow keys to scroll to the desired K-factor unit and press the ENTER key to save your choice.

Note: *Unless otherwise specified, turbine flow meters are supplied with K-factors measured in pulses per gallon (PUL/GAL).*

ENTER THE METER'S K-FACTOR – (**Note: The K-factor supplied with your meter or calculated from calibration data will be needed to complete this step.)**
At the K FACTOR prompt, press the ENTER key once. The most significant digit in the K-factor will begin to flash. Using the **UP** arrow key, increment the display digit until it matches the meter's K-factor digit. If the current selection is correct, press the **RIGHT** arrow key to advance to the next digit. Repeat this process unit all K-factor digits have been entered. Press ENTER once to save the K-factor.

SCALE FACTOR – At the SCALE F prompt, press the ENTER key once. The current Scale Factor will begin to flash. If the current selection is correct, press the ENTER key to ad-

vance to the next parameter. The scale factor is used to force a global change to all variables. For example, under operating conditions the display is reading a consistent 3% below the expected values at all flow rates. Rather than changing all parameters individually, the scale factor can be used to compensate for the 3% offset. The scale factor would be set to 1.03 to correct the readings. The range of scale factors is from 0.5 to 1.5. The default scale factor is 1.00.

METER TYPE – At the METERTYP prompt, press the ENTER key once. The current meter type will be displayed as "Liquid" or "GAS." If the current selection is correct, press the ENTER key to advance to the next parameter. If "GAS" is selected you must then enter your Operating Pressure and Operating Temperature before advancing to the next parameter.

DAMPING FACTOR – At the DAMPING prompt, press the ENTER key once. The current Damping setting will begin to flash. If the current selection is correct, press the ENTER key to advance to the next parameter. The Damping Factor is increased to enhance the stability of the flow readings. Damping values are decreased to allow the flow meter to react faster to changing values of flow. This parameter can take on any value between 0 and 99 with 0 being the default.

TOTALIZER PULSE OUTPUT – The pulse output parameter can be either enabled or disabled. When enabled this output generates 20mS duration pulse for every time the least significant digit of the totalizer increments (20Hz Max). The amplitude of the pulse is dependent on the voltage level of the supply connected to the pulse output and is limited to a maximum 30 VDC.

FLOW 4MA SETTING – When the loop powered option is ordered, the flow rate that corresponds to 4mA must be set. If the current selection is correct, press the **RIGHT** arrow key once to advance to the next parameter. If adjustment is required, press the ENTER key once at the FLOW 4MA

prompt. The most significant digit will begin to flash. The **RIGHT** arrow key moves the active digit one place to the right for each press of the key. The **UP** arrow key increments the active digit one integer for each press of the key. When the correct 4mA flow rate has been entered, press ENTER once to store this value and move to the next parameter.

FLOW 20mA SETTING – Follow the same programming procedure as the FLOW 4MA except for the flow rate setting. In this case, the maximum rate of flow for the meter should be used.

4-20mA CALIBRATION – When ordered with a 4-20mA output, this menu item allows the fine adjustment of the 4-20mA output. The 4mA setting is typically between 35 and 50. To set the 4mA value, connect an ammeter in series with the loop power supply. At the 4-20CAL prompt, press ENTER once. This display will now show a steady NO indication. Press the **UP** arrow key to change to a flashing YES display. Press ENTER once to access the 4mA fine adjustment.

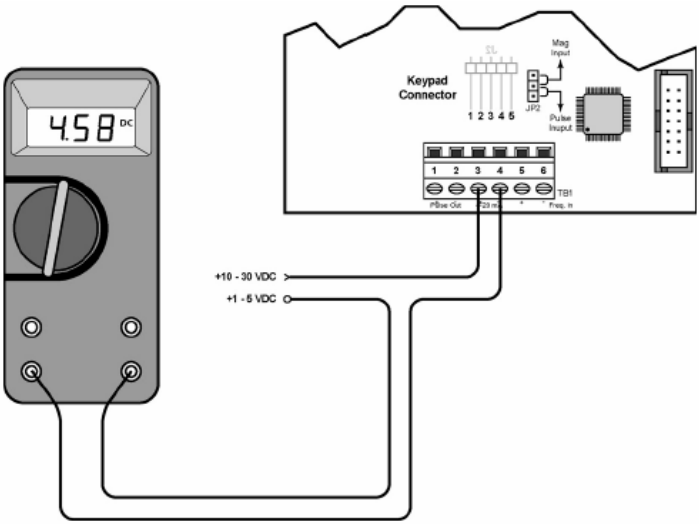

Figure 2 - Typical Ammeter Connection

4mA ADJUSTMENT – While monitoring the ammeter, adjust the 4mA value to obtain a 4mA reading. The **UP** arrow key increments the value and the **RIGHT** arrow key decrements the value. When a steady 4mA reading is obtained on the ammeter, press the ENTER key to lock in this value and move to the 20mA adjustment.

20mA ADJUSTMENT – The 20mA adjustment is performed using the same procedure as the 4mA adjustment.

While monitoring the ammeter, adjust the 20mA value to obtain a 20mA reading. The **UP** arrow key increments the value and the **RIGHT** arrow key decrements the value. When a steady 20mA reading is obtained on the ammeter, press the ENTER key to lock in this value and move to the next parameter.

4-20mA TEST – The monitor contains a diagnostic routine that allows the simulation of mA values between 4 and 20 to check output tracking. At the 4-20TEST prompt the arrow keys change the simulated mA output increments of 1mA. The ammeter should track the simulated mA output. If a 4-20mA test is not necessary, press ENTER once to move to the next parameter.

LINEARIZATION – Enhanced accuracy can be obtained by linearization of the display. The linearization routine will accept a maximum of ten points. Linearization requires additional calibration data from the meter to be used with the monitor. Typically, calibration information can be obtained in three, five, and ten points from the flow meter's manufacturer. If linearization is not needed, pressing the **RIGHT** arrow key will take you to the next parameter. (See "General Notes on Scaling" for more information).

Number of Points – At the LINEAR prompt, press ENTER once. The NUM PTS number will be displayed. Press ENTER to set the number of points you wish to use. Again, the **UP** arrow key increments the value and the

RIGHT arrow moves the cursor between digits. When the number of points has been input, press the ENTER key once to move to the first linear segment.

Press the ENTER key once and the first linear point's frequency input will begin to flash (FREQ 1). Enter the frequency for the first linear point using the arrow keys. When the frequency value input is completed, press ENTER once again to change to the coefficient value for the first linear point.

The coefficient is the value applied to the nominal K-factor to correct it to the exact K-factor for that point. The coefficient is calculated by dividing the actual K-factor for that point by the average K-factor for the flow meter.

Coefficient = Actual K-factor ÷ Average K-factor

At the COEFF prompt, enter the coefficient that corresponds to the frequency value previously entered. Press ENTER once to move to the next scaling point.

Continue entering pairs of frequency and coefficient points until all data has been entered. Press the MENU key twice at the NUM PTS prompts to exit to the LINEAR prompt. Press the **RIGHT** arrow key to move to the next parameter.

PASSWORD – Password protection prevents unauthorized users from changing programming information. Initially, the password is set to all zeros. To change the password, press ENTER once at the password prompt. The first digit of the password value will begin to flash. Using the arrow keys as previously described, enter the password value. Pressing ENTER once will store the password and take you back to the RST PSWD screen.

Note: *This password will allow users to reset totals.*

RST PSWD – Reset Password protection prevents unauthorized users from manually resetting the flow monitor's accumulated totals. Initially, the password is set to all zeros. To change the password, press ENTER once at the password prompt. The first digit of the password value will begin to flash. Using the arrow keys as previously described, enter the password value. Pressing ENTER once will store the password and take you back to the METER size screen, pressing MENU exits the programming mode. The B2800 Flow Monitor is now ready for use with its companion meter. Note: entering a password in the Password screen and leaving the password blank in the RST PSWD screen would allow for total resets (not requiring password) and restrict programming modification.

RESET TOTAL – To reset the monitor total display, in run mode press the MENU and ENTER simultaneously until TOTAL RST starts to flash. The TOTAL RST will stop flashing and the display will return to the run mode at the conclusion of the procedure.

STORE TOTAL – The current total can be manually stored in the monitor's flash memory. This procedure may be desirable prior to changing the settings or replacing the battery. Press and hold the ENTER key for 2 seconds. The display will respond with a flashing TOTALSVD and then return to the run mode.

AUTOMATIC STORE TOTAL – The monitor is equipped with a store total feature that works automatically, saving the current total to flash memory. The frequency of saves depends on the power supply option chosen

Battery Powered: Once per hour and just before a low battery condition turns the unit off.

Loop Powered: Once every ten minutes.

Battery Replacement – Battery powered monitors use a single 1.5V, “D” size, alkaline battery. When replacement is necessary, use a clean fresh battery to insure continued trouble free operation. It is recommended that the total be saved to memory before the battery is removed. (See “Store Total” in the programming section of this manual.)

Unscrew the two captive screws on the front panel to gain access to the battery. Replace the battery being sure to observe the proper polarity, and then re-fasten the front panel.

ADDITIONAL INPUT OPTIONS

The B2800 Flow Monitor is capable of receiving Magnetic Pick-up Input or a Contact Closure Input. Since most Blancett Flow Meters utilize a magnetic pick-up, the monitor is shipped configured for magnetic pick-up input. To change to a contact closure input, remove JP2 from the **Top** two pins and jumper them to the **Bottom** two pins.
See Figure 3

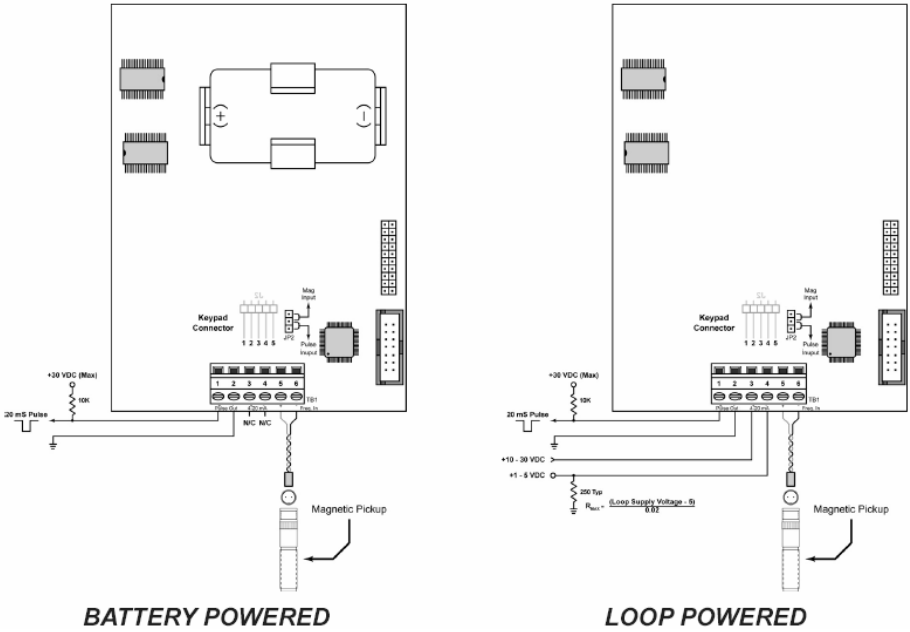

BATTERY POWERED *LOOP POWERED*

FIGURE 3 - CIRCUIT BOARD LAYOUT

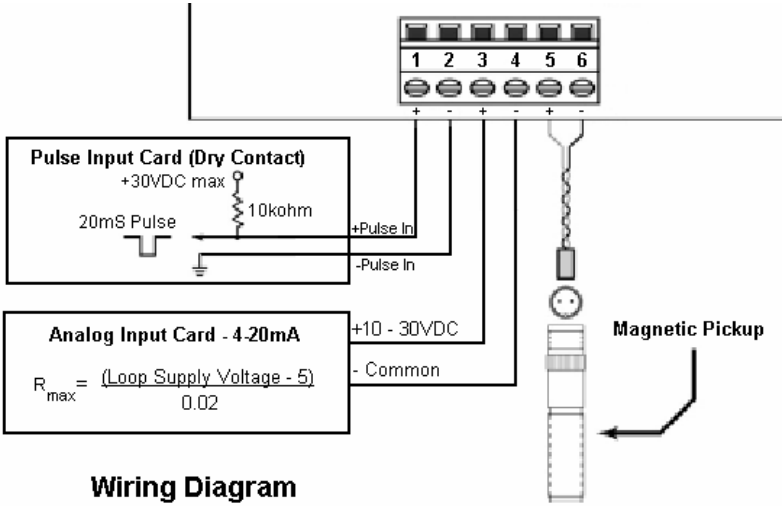

Wiring Diagram

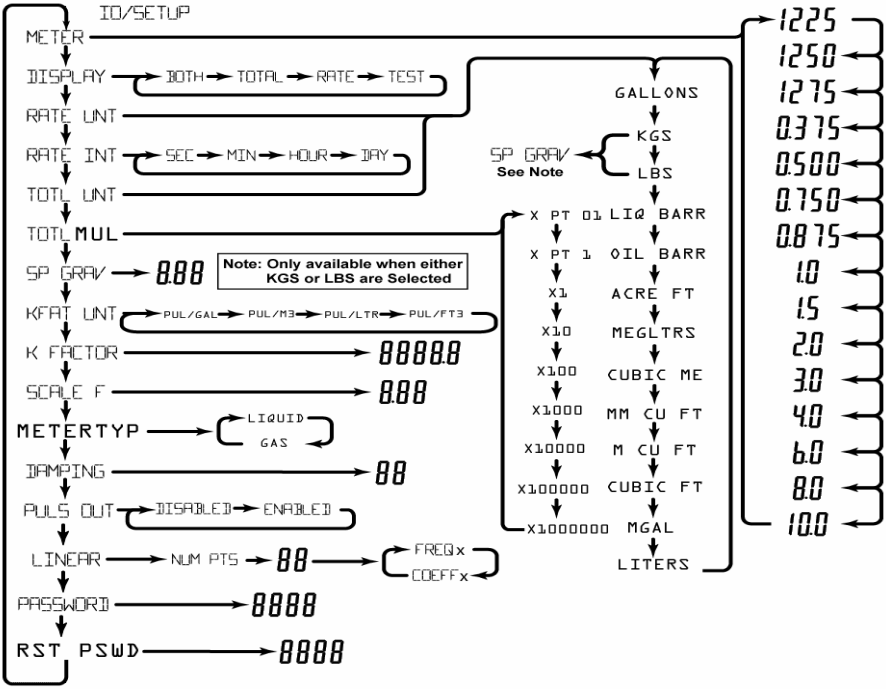

FIGURE 4 - PROGRAMMING MENU

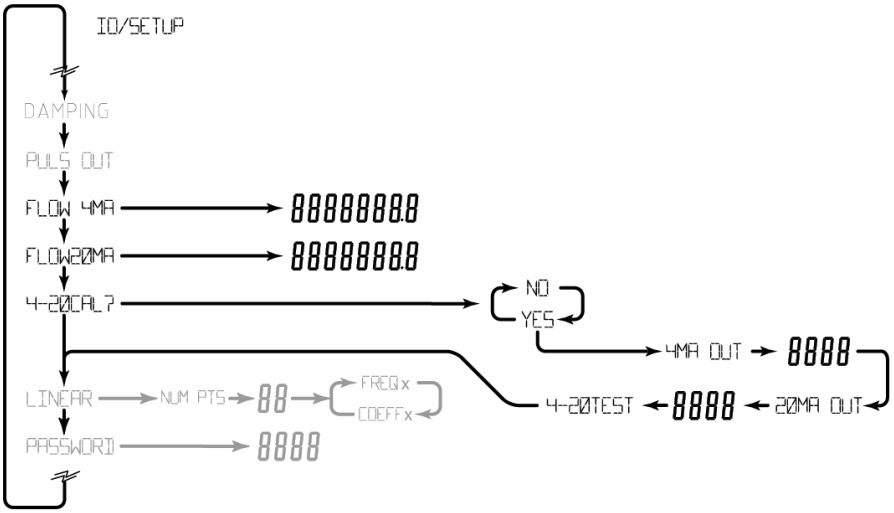

FIGURE 5 - 4-20mA PROGRAMMING

MOUNTING OPTIONS

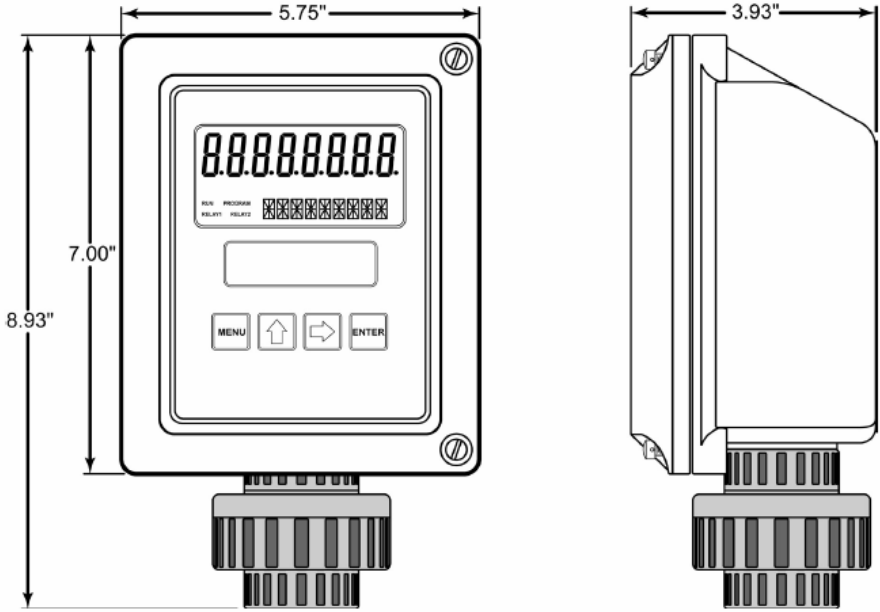

METER MOUNT

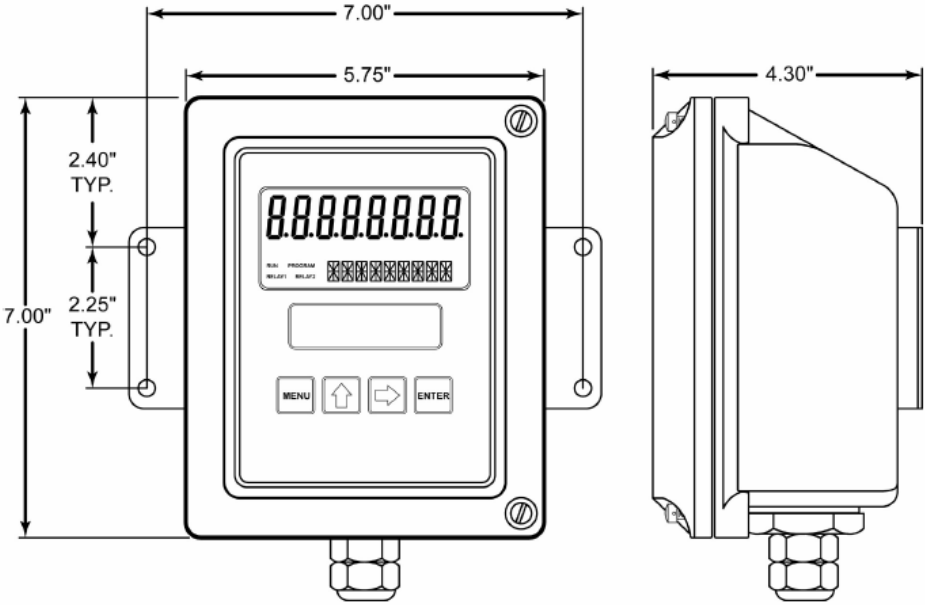

WALL MOUNT

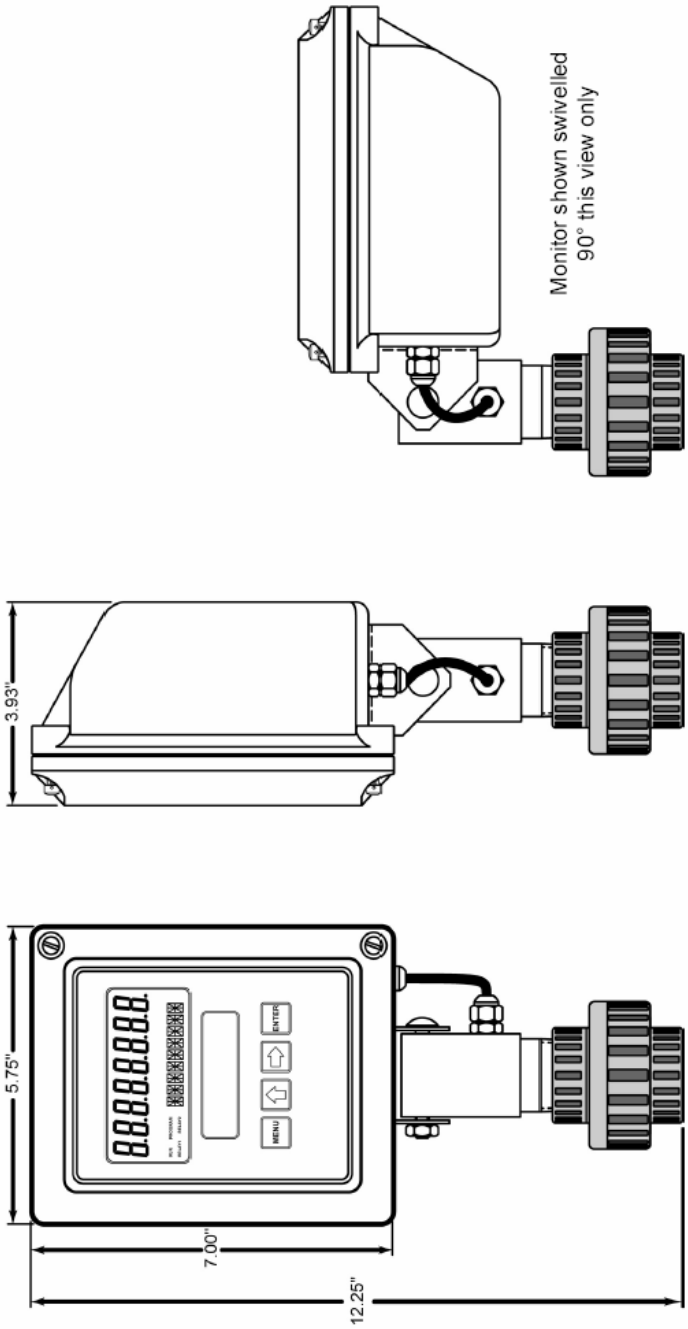

SWIVEL MOUNT

TROUBLE SHOOTING GUIDE

Trouble	Remedy
No LCD Display	• Battery Powered Version: Check battery voltage. Should be 1.5 VDC. Replace if low or bad. • Loop Powered Version: Check for current flow in the loop. Check polarity of the current loop connections for proper orientation.
No Rate or Total Displayed	• Check connection from meter pick-up to display input terminals. • Check turbine meter rotor for debris. Rotor should spin freely. • Check programming of Flow Monitor. • Check to see that the minimum flow rate is being met for the current meter in use, otherwise, the flow meter will not accurately send pulses to the flow monitor.
Flow Rate Display Interprets Reading Constantly	• This is usually an indication of external noise. Keep all AC wires separate from DC wires. • Check for large motors close to the meter pick-up. • Check for radio antenna in close proximity. • Try disconnecting the pick-up from the monitor pig tail. This should stop the noise. If not, then try re-orientating the meter to a new location.
Flow Rate Indicator Bounces	• This usually indicates a weak signal. Replace pick-up and/ or check all connections. • Examine K-factor.

Default K-Factor Values			
Meter Size	Default K-Factor	Lower Limit	Upper Limit
0.375	20,000	16,000	24,000
0.500	13,000	10,400	15,600
0.750	2,750	2,200	3,300
0.875	2,686	2,148	3,223
1.000	870.0	696.0	1,044
1.500	330.0	264.0	396.0
2.000	52.0	41.6	62.0
3.000	57.0	45.6	68.0
4.000	29.0	23.2	35.0
6.000	7.0	5.6	8.0
8.000	3.0	2.4	4.0
10.000	1.6	1.3	2.0

GENERAL NOTES ON SCALING

This information is supplied as a general introduction to the basic concepts used to scale rate displays. The applicability of the information is dependent on the type and capabilities of the specific display/monitor used.

Flow meters producing an electronic signal are normally supplied in one of two output formats. The pulse format generates some form of alternating signal that can be “raw,” that is no amplification or wave shaping can be done prior to transmission to the readout. The output pulse rate is related proportionally to flow rate. Pulses can also be modified to produce higher output amplitudes or specific wave shapes.

The other output format is an analog signal. This is a continuous variable, voltage or current signal that is normally scaled to the dynamic range of the meter. Typical analog signals are 0-5 VDC, 0-10 VDC, and 4-20 mA. The analog signals may or may not be derived from a raw pulse signal produced by the flow meter.

Scaling for any of these input signals always requires at least two scaling points for a linear process, a zero or minimum flow point and the maximum flow point. Additionally each scaling point has two components; the actual input signal value and the desired display value at that input signal, for that scaling point.

For example, a pulse output flow meter has a flow of 50GPM at a pulse rate of 100Hz. The actual input signal is the 100Hz figure but allowing the display to read “100” would be meaningless to the operator. The solution to this problem is to “scale” the display to “read” 50 (GPM) when the input is 100Hz.

PULSE OUTPUT SIGNALS FOR LINEAR PROCESSES (where linearization is not necessary)

Pulse output signals are related to flow rate by a constant, usually referred to as the “K-factor.” The K-factor is reported as the number of accumulated pulses that represents a particu-

lar volume such as gallon or liter. K-factors are indicated in pulsed per unit volume or counts per unit volume. An example of a K-factor, normally supplied by the manufacturer, might be 2000 counts per gallon. The K-factor is correlated to flow through a simple mathematical relationship:

Frequency = K-factor x Volume per unit of time ÷ 60

Using the previous example of 2000 counts per gallon and further assuming this meter has a maximum flow rate of 25GPM, the formula can be rearranged to calculate the input frequency required for a scaling point as follows:

Frequency = 2000 x 1(gal) ÷ 60 = 33.333Hz at 1GPM

Given that the meter has a maximum flow rate of 25GPM the maximum frequency would then be:

Frequency = 2000 x 25 (gal) ÷ 60 = 833.333Hz at 25GPM

A programmable display requires at least two points. The first point is the zero or minimum flow and the second is normally the maximum flow rate. For the imaginary flow meter used in the example above, the scaling would be as follows:

Input Value for Scaling Point 1	=	0
Display Value for Scaling Point 1	=	0
Input Value for Scaling Point 1	=	833.33
Display Value for Scaling Point 2	=	25

PULSE OUTPUT SIGNALS FOR NON-LINEAR PROCESSES (applications that can benefit from linearization)

Few flow meters actually behave in a linear way. There is always some uncertainty about the “exact” flow at a given reported input value. For many common flow measurement applications the assumption of linear flow is adequate for the process being measured. When higher accuracy is required, a technique called “Linearization” is often employed.

When the flow meter is being calibrated, multiple data points are obtained for the particular meter being tested. A typical five point

calibration run is displayed below.

GPM	AVG Frequency	**UUT Hz Counts/GAL	UUT K(Hz*60)/NK GPM	Error % FS
15.00	769.7	3078.59	14.90	-0.65
9.06	466.1	3086.75	9.03	-0.38
5.49	285.2	3118.64	5.52	0.65
3.32	171.7	3103.95	3.32	0.17
2.00	103.6	3101.80	2.01	0.10

*****UUT=Unit Under Test***

If this meter produced an actual linear output, the K-factor calculation for the Unit Under Test would be exactly the same for each measurement point. Inspection of the UUT K in the example above shows that this is not the case and indicates that this meter is not a perfectly linear device.

Many programmable displays allow for linearization and can provide a better match of the displayed flow values with the actual flow values by incorporating more measurement points. In the example, the unit would be programmed for six points, the five data points and a zero point, and use pairs of input values to accomplish the linearization.

PART NUMBERING INFORMATION

B 2 8 X X X - X X

Program Level

A = Advanced
S = Simplified

Power Option

B = Battery
L = Loop

Mounting Style

M = Meter Mount
R = Remote Mount
S = Swivel Mount
H = Hand-Held
P = Panel Mount
X = Explosion-Proof

Units of Measure

AB = Gallons
ED = Barrels
HB = Liters
ID = Cubic Meters
CS = Customer Selectable*

Note: **Advanced B2800 monitors only. The default is gallons per minute.*

COMPONENT	PART NUMBER
Keypad	B260713
Battery	B280601
Battery Tie Wrap	B228036
Pick-up Cable	B222-121
Desiccant Bag	B260630
PVC Union	B220016
PVC Reducer Bushing	B220056
Rubber Washer	B228207
Steel Lock Washer	B220018
PCB Shield (battery units)	B280603
Desiccant Shield	B280680
Cord Grip	B220103

THIS DRAWING IS RESPONSIBILITY TO PACKLE FLOWMETER INC. EXCEPT AS PURCHASER'S SYSTEM IS SUBJECT TO USE THE QUALITY MATTER OF THIS DRAWING OR TERMINAL INFORMATION SHOWN FOR THE PART IS REPRODUCE THIS DRAWING OR ANY PART EXCEPT FOR PACKLE SUPPLIERS OF PACKLE FLOWMETER INC. BUT PACKLE A PROTOTYPE PRODUCT FOR MANUFACTURE OR SIMILAR USE.

REVISIONS					
ZONE	LTR	DESCRIPTION	E.C.O.	DATE	APPROVAL
ALL	A	UPDATE DIMENSIONS PER ECN APPROVAL	00000	6/17/03	
DELETE	B	1.) ADD MAGNETIC PICKUP #111110	00000	8/13/03	
CB		2.) ADDED SEA MARKING			

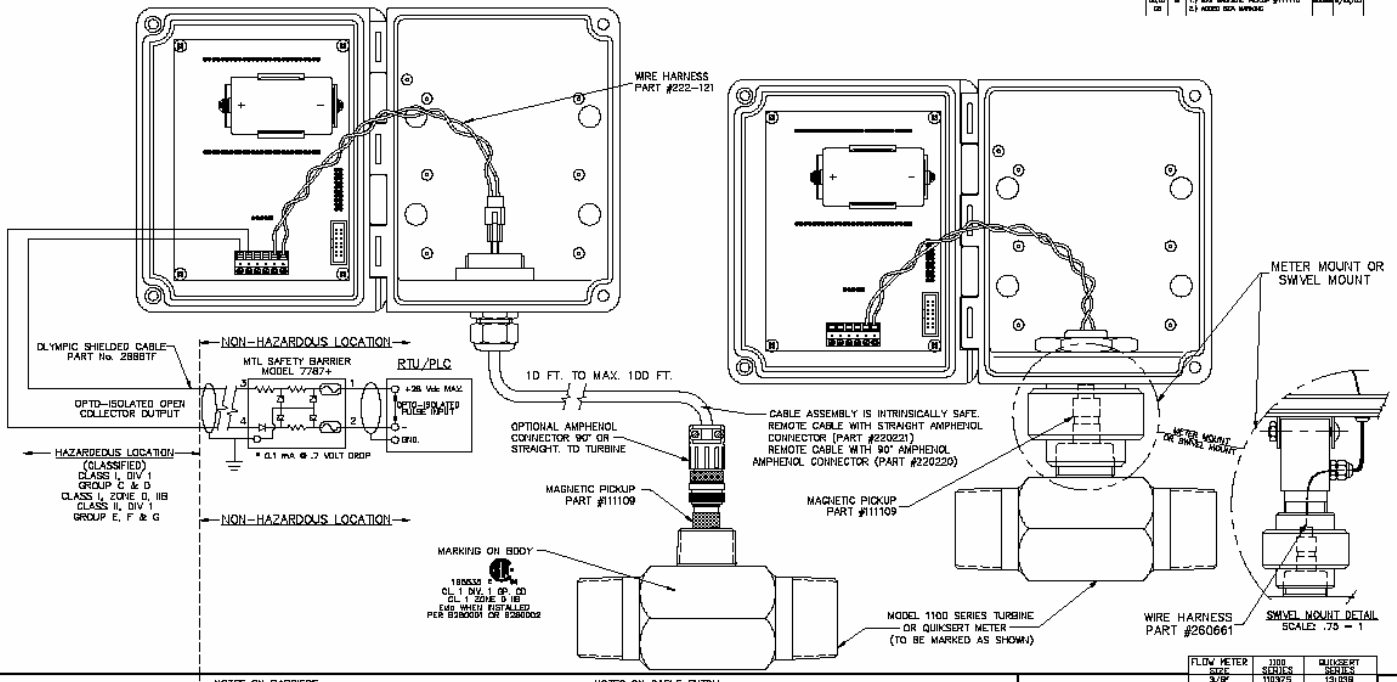

FOR OTHER BARRIER SELECTION USE THE FOLLOWING INFORMATION:

OPTO ISOLATED OUTPUT
V max = 30 Vdc
I max = 100 mA
Ci = 0.00 µF
Li = 0.0 mH

1. BURR TO BE .005/.010
2. FINISH TO BE 63µ
3. REMOVE ALL BURRS AND BREAK SHARP EDGES .005/.010
UNLESS OTHERWISE SPECIFIED

NOTES ON BARRIERS:

1. SELECTED BARRIERS MUST BE CSA CERTIFIED AS INTRINSICALLY SAFE FOR THE APPLICATION AND HAVE Voc NOT EXCEEDING Vmax AND Isc NOT EXCEEDING Imax CAPACITANCE VALUE SHALL BE AS SHOWN IN TABLE 1.
2. CABLE CAPACITANCE PLUS INTRINSICALLY SAFE EQUIPMENT CAPACITANCE MUST BE LESS THAN MARKED CAPACITANCE (ca) SHOWN ON ANY BARRIER USED. THE SAME APPLIES FOR THE INDUCTANCE
3. MAY BE IN DIVISION 2 LOCATION IF SO APPROVED
4. BARRIERS MUST BE INSTALLED IN ACCORDANCE WITH BARRIER MANUFACTURER'S CONTROL DRAWING AND CANADIAN ELECTRICAL CODE PART 1, SEC. 18 AND APPENDIX F.
5. WHEN SELECTING CABLE FOR CONNECTION TO 1100 SERIES TURBINE OR QUIKSERT METER USE CABLE WITH THE FOLLOWING PARAMETERS: 0.2 µh/ft. AND 80 pF/ft.

NOTES ON CABLE ENTRY

1. CABLE ENTRY DOME CONNECTOR PART NUMBER B260544, DIAMETER OF CABLE NOT TO EXCEED .144 (2,8) to .250 (6,3)
2. REFERENCE INSTALLATION MANUAL FOR DOME CONNECTOR HOLE PLACEMENT
3. ALL CABLE ENTRIES INTO THE ENCLOSURE MUST BE BROUGHT THROUGH SUITABLY SIZED UL & CSA CERTIFIED HEYCO LIQUID TIGHT STRAIGHT THRU FITTINGS

NOTES ON CONTROL EQUIPMENT

1. CONTROL EQUIPMENT MUST NOT USE OR GENERATE MORE THAN 250 V, WITH RESPECT TO EARTH.

TABLE 1:

IS EQUIPMENT		BARRIER
Vmax	≥	Voc
Imax	≥	Isc
Ci + Cc	≤	Ca
Li + Lc	≤	La

FLOW METER SIZE	1100 SERIES	QUIKSERT SERIES
3/8"	110378	121038
1/2"	110500	121050 - 121050
3/4"	110750	121075 - 121075
7/8"	110875	121088 - 121088
1"	111100	121100 - 121100
1-1/2"	111115	121150
2"	111150	N/A
2"	111120	122200
3"	111130	123300
4"	111140	124400
6"	111160	126600
8"	111180	128800
10"	111200	132200

PART NUMBER B280001

MACOR PROPRIETARY INFORMATION DISCLOSURE OR USE WITHOUT WRITTEN PERMISSION IS PROHIBITED	DRAWN BY:	T. PAUL	6/10/03
	CHECKED BY:		
	CLASSIFICATION:		
MATERIAL:	REVISED BY:	T. PAUL	8/25/03
	SUPERVISOR:		
	APPD.		

THE ORIGINAL THIS DRAWING WAS CREATED AND THE SOLE OWNERSHIP IS A PATENTED DESIGN. ANY MODIFICATIONS MADE TO THE DRAWING WILL BE CONSIDERED ORIGINAL INFORMATION.

FLOWSERVE

TITLE: INSTALLATION DRAWING FOR BATTERY POWERED B2800 MONITOR

SIZE	CODE I.D. NO.	PART NUMBER
D	59380	B280001

SCALE: NONE | DUBUQUE REV: B | SHEET: 1 OF 1

STATEMENT OF WARRANTY

Blancett Flow Meters, Division of Racine Federated, Inc. warrants to the end purchaser, for a period of one year from the date of shipment from the factory, that all flow meters manufactured by it are free from defects in materials and workmanship. This Warranty does not cover products that have been damaged due to defects caused by abnormal use, misapplication, abuse, lack of maintenance, modified or improper installation. Blancett's obligation under this warranty is limited to the repair or replacement of a defective product, at no charge to the end purchase, if the product is inspected by Blancett and found to be defective. Repair or replacement is at Blancett's discretion. A return goods authorization (RGA) number must be obtained from Blancett before any product may be returned for warranty repair or replacement. The product must be thoroughly cleaned and any process chemicals removed before it will be accepted for return.

The purchaser must determine the applicability of the product for its desired use and assumes all risks in connection therewith. Blancett assumes no responsibility or liability for any omissions or errors in connection with the use of its products. Blancett will under no circumstances be liable for any incidental, consequential, contingent or special damages or loss to any person or property arising out of the failure of any product, component or accessory.

All expressed or implied warranties, including **the implied warranty of merchantability and the implied warranty of fitness for a particular purpose or application are expressly disclaimed** and shall not apply to any products sold or services rendered by Blancett.

The above warranty supersedes and is in lieu of all other warranties, either expressed or implied and all other obligations or liabilities. No agent or representative has any authority to alter the terms of this warranty in any way.

8635 Washington Avenue • Racine, Wisconsin 53406
Technical Toll-Free: 877.722.4631 •
Sales Toll-Free: 800.235.1638
Phone: 817.426.2888 • Fax: 817.426.5303
www.blancett.com

Form: B2800 Advanced Manual
Revision 03/06

Blancett®
Flow Meters

MODEL 1100 TURBINE FLOW METER

INSTALLATION & INSTRUCTION MANUAL

8635 Washington Avenue
Racine, Wisconsin 53406
Technical Toll-Free: 877.722.4631
Sales Toll-Free: 800.235.1638
Phone: 262.639.6770 Fax: 262.417.1155
www.blancett.com

RACINE FEDERATED, INC.
UL
REGISTERED FIRM
ISO 9001:2000 FILE NO. A6026

TABLE OF CONTENTS

Introduction **4**

Specifications **6**

Installation **7**

Operational Start-Up **9**

Troubleshooting **11**

Repair Kit Information **12**

Statement of Warranty **13**

INTRODUCTION

Fluid entering the meter passes through the inlet flow straightener which reduces its turbulent flow pattern and improves the fluid's velocity profile. Fluid then passes through the turbine blades causing it to rotate at a speed proportional to the fluid velocity. As each blade passes through the magnetic field, created at the base of the pickoff transducer, AC voltage (pulse) is generated in the pick-up coil (see **Figure 1**). These impulses produce an output frequency proportional to the volumetric flow through the meter. The output frequency is used to represent flow rate and/or totalization of fluid passing through the turbine flow meter.

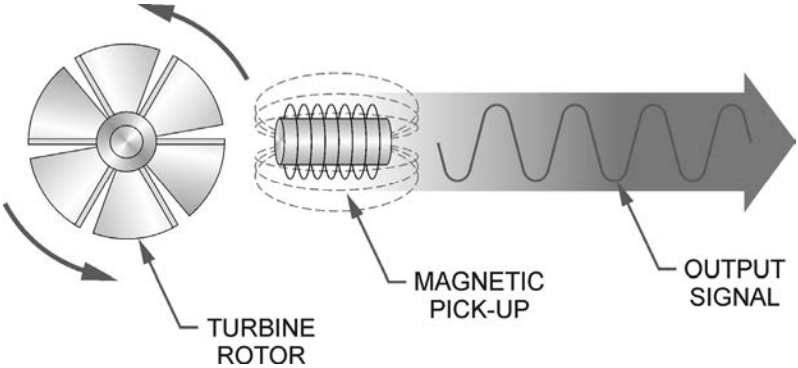

Figure 1
Schematic illustration of electric signal generated by rotor movement

TURBINE METER and REPAIR KIT

The Model 1100 Turbine Flow Meter is designed to withstand the rigorous demands of the most remote flow measurement applications. The Model 1100 Flow Meter maintains measurement accuracy and mechanical integrity in the corrosive and abrasive fluids commonly found in oil field waterflood project pipelines, in-situ mining operations, offshore facilities and plant locations. Simple to install and service, it can operate in any orientation (horizontal to vertical) as long as the "flow direction" arrow is aligned in the

same direction as the actual line flow. For optimum performance, the flow meter should be installed with a minimum of 10 diameters upstream pipe length and 5 diameters downstream pipe length.

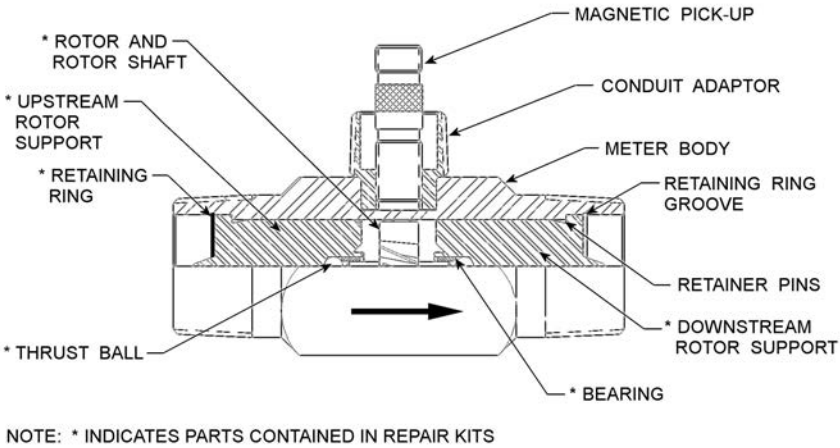

Figure 2
Typical cross-section of B110-375 through B111-121 turbine flow meter

SPECIFICATIONS

MATERIALS of CONSTRUCTION:

Body: 316 Stainless Steel
Rotor: CD4MCU Stainless Steel
Rotor Support and Bearings: 316 Stainless Steel
Rotor Shaft: Tungsten Carbide

OPERATING LIMITATIONS:

Temperature: -150 °F to +350 °F (-101 °C to +177 °C) The meter should not be subjected to temperatures above +350° F (177° C), or below -150° F (-101° C) or the freezing point of the metered liquid. High temperatures will damage the magnetic pick-up, while lower temperatures will limit the rotation of the rotor.

Pressure: Maximum pressure ratings as follows:
5,000 psi — all NPT meters up to 2"
2,000 psi — 3" male NPT
1,500 psi — 4" male NPT
1,000 psi — 6" male NPT
800 psi — all grooved end meters
Note: Consult factory for pressure ratings for flanged meters.

WARNING: *Pressure in excess of allowable rating may cause the housing to burst and cause serious personal injury.*

Accuracy: ± 1.0% of reading

Repeatability: ± 0.1%

Calibration: Water (NIST Traceable Calibration)

Corrosion: All Blancett Model 1100 turbine meters are constructed of stainless steel and tungsten carbide. The operator must ensure that the operating fluid is compatible with these materials. Incompatible fluids can cause deterioration of internal components and cause a reduction in meter accuracy.

Pulsation and Vibration: Severe pulsation and mechanical vibration will affect accuracy and shorten the life of the meter

Filtration: If small particles are present in the fluid, Blancett recommends that a strainer be installed upstream of the meter (see **Table 1** on page 8 for filtration recommendations).

REPAIR KIT:

The Model 1100 Turbine Meter Repair Kit is designed for easy field service of a damaged flow meter, rather than replacing the entire flow meter (see Appendix B on page 12 for repair kit information). Repair parts are constructed of stainless steel alloy and tungsten carbide and are factory calibrated to ensure accuracy throughout the entire flow range. Each kit is complete and includes the calibrated K-factor which is used to recalibrate the flow monitor or other electronics to provide accurate output data.

INSTALLATION INSTRUCTIONS

Prior to installation, the flow meter should be checked internally for foreign material and to ensure the turbine rotor spins freely. Fluid lines should also be checked and cleared of all debris.

The flow meter must be installed with the flow arrow, etched on the exterior of the meter body, pointing in the direction of fluid flow. Though the meter is designed to function in any position it is recommended, where possible, to install horizontally with the magnetic pick-up facing upward.

The liquid being measured should be free of any large particles that may obstruct rotation of the rotor. If particles are present, a mesh strainer should be installed upstream before operation of the flow meter. (See **Table 1** on page 8.)

PART NUMBER	STRAINER MESH	CLEARANCE	FILTER SIZE
B110-375	60 × 60	.0092	260 Micron
B110-500	60 × 60	.0092	260 Micron
B110-750	60 × 60	.0092	260 Micron
B110-875	60 × 60	.0092	260 Micron
B111-110	60 × 60	.0092	260 Micron
B111-115	20 × 20	.0340	.86mm
B111-120	10 × 10	.0650	1.6mm
B111-121	20 × 20	.0340	.86mm
B111-130, B311-004	8 × 8	.0900	2.3mm
B111-140, B311-084	10 × 10	.0650	1.6mm
B111-160, B311-085	4 × 4	.1875	4.8mm
B111-180	8 × 8	.0900	2.3mm
B111-200	4 × 4	.1875	4.8mm

Table 1
Strainer Mesh Installation Details

The preferred plumbing setup is one containing a by-pass line (**Figure 3** on page 10) that allows meter inspection and repair without interrupting flow. If a by-pass line is not utilized, it is important that all control valves be located downstream of the flow meter (**Figure 4** on page 10).

CAUTION: *Damage can be caused by striking an empty meter with a high velocity flow stream.*

This is true with any restriction in the flow line that may cause the liquid to flash. If necessary, air eliminators should be installed to ensure that the meter is not incorrectly measuring entrained air or gas.

It is recommended that a minimum length, equal to ten (10) pipe diameters of straight pipe, be installed on the upstream side and five (5) diameters on the downstream side of the flow meter. Otherwise, meter accuracy may be affected. Piping should be the same size as the meter bore or threaded port size.

Do not locate the flow meter or connection cable close to electric motors, transformers, sparking devices, high voltage lines, or place connecting cable in conduit with wires furnishing power for such devices. These devices can induce false signals in the flow meter coil or cable, causing the meter to read inaccurately.

If problems arise with the flow meter and monitor, consult **Appendix A** (Troubleshooting Guide) on page 11. If further problems arise, consult the factory.

If the internal components of the turbine flow meter are damaged beyond repair, turbine meter repair kits are available. Information pertaining to the turbine meter repair kits is referenced in **Appendix B** on page 12.

OPERATIONAL START-UP

The following steps should be followed when installing and starting the meter.

> ***WARNING:*** *Make sure that fluid flow has been shut off and pressure in the line released before attempting to install the meter in an existing system.*

1. After meter installation, close the isolation valves and open the by-pass valve. Flow liquid through the by-pass valve for sufficient time to eliminate any air or gas in the flow line.

> ***CAUTION:*** *High velocity air or gas may damage the internal components of the meter.*

2. Open upstream isolating valve slowly to eliminate hydraulic shock while charging the meter with the liquid. Open the valve to full open.

3. Open downstream isolating valve to permit meter to operate.
4. Close the by-pass valve to a full closed position.
5. Adjust the downstream valve to provide the required flow rate through the meter. Note: The downstream valve may be used as a control valve.

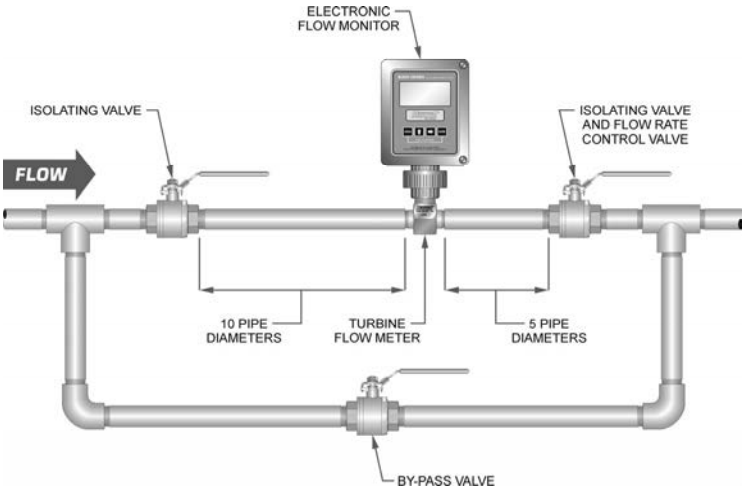

Figure 3
Meter installation utilizing a by-pass line

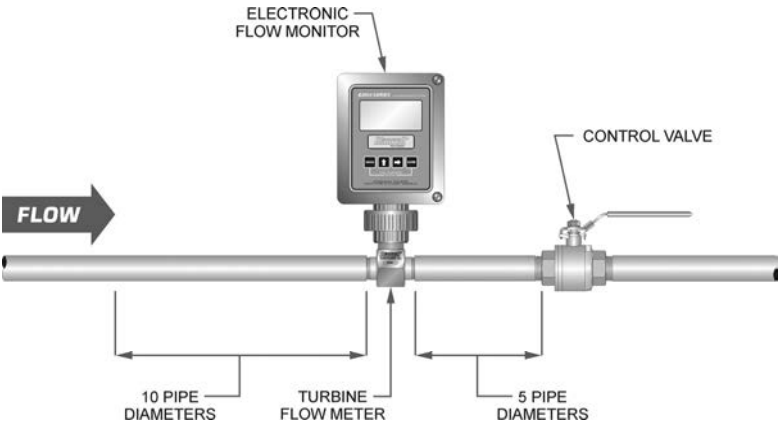

Figure 4
Meter installation without utilizing a by-pass line

APPENDIX A
TROUBLESHOOTING GUIDE

Trouble	Possible Cause	Remedy
Meter indicates higher than actual flow rate	-Cavitation -Debris on rotor support -Build up of foreign material on meter bore -Gas in liquid	-Increase back pressure -Clean meter -Clean meter -Install gas eliminator ahead of meter
Meter indicates lower than actual flow rate	-Debris on rotor -Worn bearing -Viscosity higher than calibrated	-Clean meter and add filter -Clean meter and add filter -Recalibrate monitor
Erratic system indication, meter alone works well (remote monitor application only)	Ground loop in shielding	Ground shield one place only. Look for internal electronic instrument ground. Reroute cables away from electrical noise
Indicator shows flow when shut off	Mechanical vibration causes rotor to oscillate without turning	Isolate meter
No flow indication. Full or partial open position	Fluid shock, full flow into dry meter or impact caused bearing separation or broken rotor shaft	Rebuild meter with repair kit and recalibrate monitor. Move to location where meter is full on start-up or add downstream flow control valve
Erratic indication at low flow, good indication at high flow	Rotor has foreign material wrapped around it	Clean meter and add filter
No flow indication	Faulty pick-up	Replace pick-up
System works perfect, except indicates lower flow over entire range	By-pass flow, leak	Repair or replace by-pass valves, or faulty solenoid valves
Meter indicating high flow, upstream piping at meter smaller than meter bore	Fluid jet impingement on rotor	Change piping
Opposite effects of above	Viscosity lower than calibrated	Change temperature, change fluid or recalibrate meter

APPENDIX B
REPAIR KIT INFORMATION

Flow Meter Size	Repair Kit Fits Meter Part Number	Repair Kit Part Number
3/8"	B110-375, B110-375-1/2	B251-102
1/2"	B110-500, B110-500-1/2	B251-105
3/4"	B110-750, B110-075-1/2	B251-108
7/8"	B110-875	B251-109
1"	B111-110	B251-112
1-1/2"	B111-115	B251-116
2" Low	B111-121	B251-116
2"	B111-120	B251-120
3"	B111-130, B311-004	B251-131
4"	B111-140, B311-084	B251-141
6"	B111-160, B311-085	B251-161
8"	B111-180	B251-181
10"	B111-200	B251-200
Standard Magnetic Pick-up	All Meter Sizes	B111109

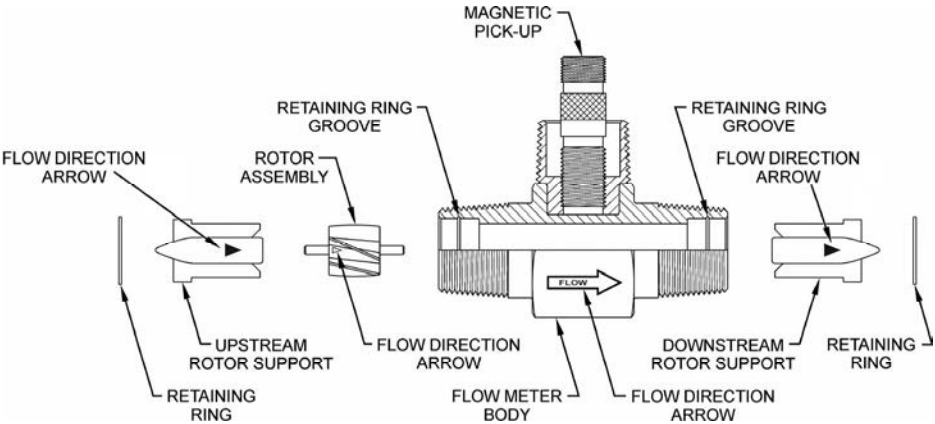

Figure 5
Typical turbine meter component directory

STATEMENT OF WARRANTY

Blancett Flow Meters, Division of Racine Federated Inc. warrants to the end purchaser, for a period of one year from the date of shipment from the factory, that all flow meters manufactured by it are free from defects in materials and workmanship. This Warranty does not cover products that have been damaged due to defects caused by misapplication, abuse, lack of maintenance, modified or improper installation. Blancett's obligation under this warranty is limited to the repair or replacement of a defective product, at no charge to the end purchase, if the product is inspected by Blancett and found to be defective. Repair or replacement is at Blancett's discretion. A return goods authorization (RGA) number must be obtained from Blancett before any product may be returned for warranty repair or replacement. The product must be thoroughly cleaned and any process chemicals removed before it will be accepted for return.

The purchaser must determine the applicability of the product for its desired use and assumes all risks in connection therewith. Blancett assumes no responsibility or liability for any omissions or errors in connection with the use of its products. Blancett will under no circumstances be liable for any incidental, consequential, contingent or special damages or loss to any person or property arising out of the failure of any product, component or accessory.

All expressed or implied warranties, including **the implied warranty of merchantability and the implied warranty of fitness for a particular purpose or application are expressly disclaimed** and shall not apply to any products sold or services rendered by Blancett.

The above warranty supersedes and is in lieu of all other warranties, either expressed or implied and all other obligations or liabilities. No agent or representative has any authority to alter the terms of this warranty in any way.

NOTES

8635 Washington Avenue • Racine, Wisconsin 53406
Technical Toll-Free: 877.722.4631
Sales Toll-Free: 800.235.1638
Phone: 262.639.6670 • Fax: 262.417.1155

Blancett is a registered trademark of Racine Federated Inc.
UL is a registered trademark of Underwriters Laboratories.
© 2008 Racine Federated Inc.

Form: Model 1100 Manual
Revision 08/08

Attachment F

Motor Controllers

INSTRUCTION MANUAL

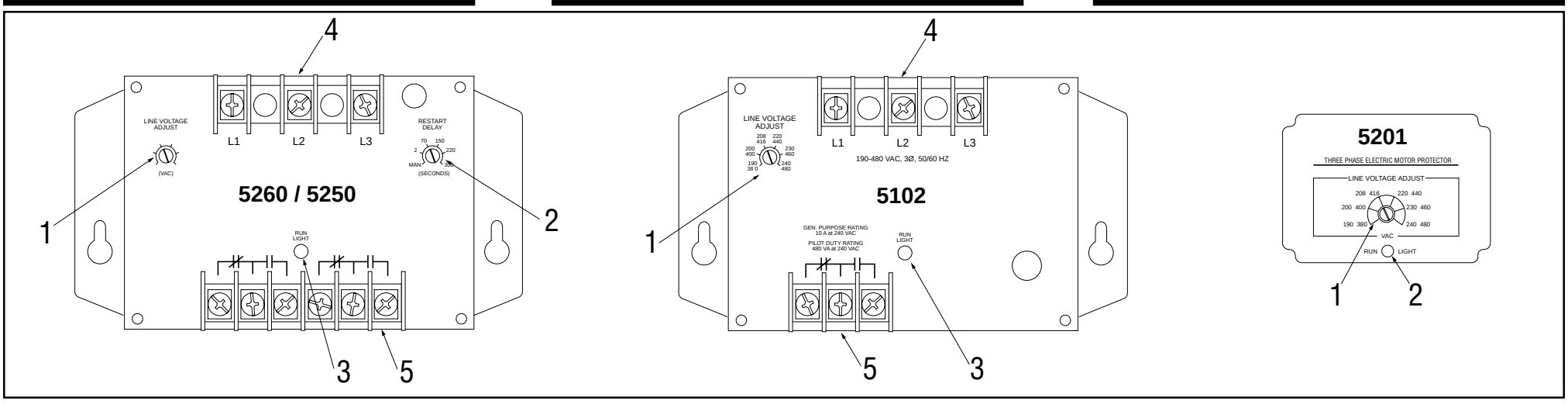

GREENLEE®

MOTOR PROTECTORS
5260, 5250, 5102, 5201

999 2239.8 © 2001 Greenlee Textron IM 1311 REV 2 2/01

⚠DANGER

Read and **understand** this material before installing or servicing this motor protector.

Failure to understand how to safely install or service this product can result in severe injury or death.

⚠DANGER

Electrical Shock Hazard:

Contact with live circuits will result in severe injury or death.

⚠DANGER

Electrical Shock Hazard:
Lock out power during service and installation procedures.

Failure to observe this warning will result in severe injury or death.

⚠WARNING

- Do not use a motor protector that is wet or damaged. Electric shock or damage to the motor protector may result.
- Do not perform any service or maintenance other than that described in these instructions. Electric shock or damage to the motor protector may result.

Failure to observe these warnings may result in severe injury or death.

Features

1. Line Voltage Adjust — Rotate to adjust to the nominal three-phase line voltage feeding the motor to be protected.
2. Restart Delay Adjustment — Rotate to adjust the time between the motor protector seeing acceptable power and the motor protector closing its contacts.
   Note: For compressor applications the restart delay should be set for the approximate time it takes for the head pressure to bleed off of the compressor. For other applications, the restart delay is typically set at 2 seconds. If the restart delay is in the MAN (manual) position, the restart delay must be turned away from MAN to restart.
3. Run Light — LED lights when the output relay is energized.
4. Input Terminal Strip — Connect 3-phase power source here.
5. Output Terminal Strip — Connect motor to be controlled or alarm here.

Specifications

All Models
Frequency ..... 50-60 Hz
Low Voltage (% of set point)
  Trip 90%
  Reset 93%
Voltage Unbalance (NEMA)
  Trip 6%
  Reset 4.5%
Trip Delay Time (Nominal)
  Low Voltage ..... 4 seconds
  Unbalance & Phasing Faults ..... 2 seconds
Transient Protection (internal) ..... ±4 kV for 50 µs per IEC 1000-4-5: 1995
Power Consumption ..... 5 Watts (max.)

Model 5260 Only
3-Phase Line Voltage ..... 475 to 600 VAC
High Voltage (% of set point)
  Trip 110%
  Reset 107%
Restart Delay Time
  After a Fault ..... manual and 2-300 seconds (selectable)
  After a complete power loss ..... manual and 2-300 seconds (selectable)
Output Contact Rating (pilot duty) DPDT ..... 470 VA @ 600 VAC
Weight ..... 24 oz.

Model 5250 Only
3-Phase Line Voltage ..... 190 to 480 VAC
High Voltage (% of set point)
  Trip 110%
  Reset 107%
Restart Delay Time
  After a Fault ..... manual and 2-300 seconds (selectable)
  After a complete power loss ..... manual and 2-300 seconds (selectable)
Output Contact Rating (pilot duty) DPDT ... 480 VA @ 240 VAC or 10 A General Purpose
Weight ..... 14 oz.

Model 5102 Only
3-Phase Line Voltage ..... 190 to 480 VAC
Restart Delay Time
  After a Fault ..... 2 seconds
  After a complete power loss ..... 2 seconds
Output Contact Rating (pilot duty) SPDT ..... 480 VA @ 240 VAC or 10A General Purpose
Weight ..... 14 oz.

Model 5201 Only
3-Phase Line Voltage ..... 190 to 480 VAC
Restart Delay Time
  After a Fault ..... 2 seconds
  After a complete power loss ..... 2 seconds
Output Contact Rating (pilot duty) SPDT ..... 480 VA @ 120/240 VAC
Weight ..... 9 oz.

MANUEL D'UTILISATION

GREENLEE®

PROTECTEURS DE MOTEUR
5260, 5250, 5102, 5201

⚠DANGER

Il convient de **lire** et de **comprendre** les instructions de ce manuel avant d'installer ou de réparer ce dispositif de protection de moteur.

Le fait de ne pas comprendre les instructions d'installation ou de réparation de ce produit peut entraîner de graves blessures ou la mort.

⚠DANGER

Risque d'électrocution :

Tout contact avec les circuits sous tension entraînera de graves blessures ou la mort.

⚠DANGER

Risque d'électrocution :
Mettre l'unité hors tension et couper le courant pendant les procédures de réparation et d'installation.

Le fait de ne pas respecter cette mise en garde entraînera de graves blessures ou la mort.

⚠AVERTISSEMENT

- Ne pas utiliser un dispositif de protection de moteur mouillé ou endommagé. Cela pourrait entraîner un risque d'électrocution ou endommager l'unité.
- Ne pas effectuer de réparation ou d'entretien autres que ceux prescrits dans ces instructions. Cela pourrait entraîner un risque d'électrocution ou endommager l'unité.

Le fait de ne pas respecter cette mise en garde peut entraîner de graves blessures ou la mort.

Caractéristiques

1. Réglage de la tension — Tourner le sélecteur de tension et le régler sur la tension nominale en courant triphasique qui alimente le moteur à protéger.
2. Temporisation de redémarrage — Tourner le sélecteur pour paramétrer le laps de temps qui doit s'écouler entre le moment où le dispositif de protection du moteur capte une arrivée d'électricité acceptable et le moment où il referme ses bornes de sortie habituellement ouvertes.
   Remarque : Pour les applications utilisant un compresseur, la temporisation de redémarrage doit être réglée sur la durée approximative nécessaire pour que la pression de refoulement puisse être purgée du compresseur. Pour d'autres types d'applications, la temporisation de redémarrage est généralement définie sur 2 secondes. Si la temporisation de redémarrage est sur la position MAN (Manuelle), il est nécessaire de positionner le sélecteur sur une autre position pour pouvoir redémarrer.
3. Voyants — Les diodes s'allument lorsque les relais de sortie sont sous tension.
4. Borne d'entrée — Connecter la source d'alimentation en courant triphasique sur cette borne.
5. Borne de sortie — Connecter le moteur qui doit être contrôlé ou l'alarme sur cette borne.

Spécifications

Tous les modèles
Fréquence ..... 50–60 Hz
Basse tension (% du point de référence)
  Déclenchement ..... 90 %
  Réenclenchement ..... 93 %
Déséquilibre de tension (NEMA)
  Déclenchement ..... 6 %
  Réenclenchement ..... 4,5 %
Délais de déclenchement (nominal)
  Basse tension ..... 4 secondes
  Déséquilibre et rupture de phase ..... 2 secondes
Protection transitoire (interne) ..... ±4 kV pour 50 µs selon IEC 1000-4-5: 1995
Consommation électrique ..... 5 watts (max)

Modèle 5260 seulement
Tension de ligne triphasique ..... 475 à 600 V c.a.
Haute tension (% du point de référence)
  Déclenchement ..... 110 %
  Réenclenchement ..... 107 %
Durée de la temporisation de redémarrage
  Après rupture ..... manuel et 2–300 secondes (sélectionnable)
  Après perte de puissance totale ..... manuel et 2–300 secondes (sélectionnable)
Intensité nominale des contacts en sortie (circuit de commande)
  Bipolaire bidirectionnel ..... 470 VA à 600 V c.a.
Poids ..... 680 g

Modèle 5250 seulement
Tension de ligne triphasique ..... 190 à 480 V c.a.
Haute tension (% du point de référence)
  Déclenchement ..... 110 %
  Réenclenchement ..... 107 %
Durée de la temporisation de redémarrage
  Après rupture ..... manuel et 2–300 secondes (sélectionnable)
  Après perte de puissance totale ..... manuel et 2–300 secondes (sélectionnable)
Intensité nominale des contacts en sortie (circuit de commande)
  Bipolaire bidirectionnel ..... 480 VA à 240 V c.a. ou 10 A en usage général
Poids ..... 400 g

Modèle 5102 seulement
Tension de ligne triphasique ..... 190 à 480 V c.a.
Durée de la temporisation de redémarrage
  Après rupture ..... 2 secondes
  Après perte de puissance totale ..... 2 secondes
Intensité nominale des contacts en sortie (circuit de commande)
  Unipolaire bidirectionnel ..... 480 VA à 240 V c.a. ou 10 A en usage général
Poids ..... 400 g

Modèle 5201 seulement
Tension de ligne triphasique ..... 190 à 480 V c.a.
Durée de la temporisation de redémarrage
  Après rupture ..... 2 secondes
  Après perte de puissance totale ..... 2 secondes
Intensité nominale des contacts en sortie (circuit de commande)
  Unipolaire bidirectionnel ..... 480 VA à 120/240 V c.a.
Poids ..... 255 g

MANUAL DE INSTRUCCIONES

GREENLEE®

PROTECTORES DE MOTORES
5260, 5250, 5102, 5201

⚠PELIGRO

Lea y **comprenda** este material antes de instalar este protector de motor o darle servicio.

El hecho de no comprender la forma segura de instalar este producto y darle servicio puede ocasionar lesiones graves o incluso la muerte.

⚠PELIGRO

Riesgo de electrochoque.

El contacto con circuitos alimentados ocasionará lesiones graves o incluso la muerte.

⚠PELIGRO

Riesgo de electrochoque.
Bloquee el suministro de energía durante los procedimientos de instalación y servicio.

La inobservancia de esta advertencia puede ocasionar lesiones graves o incluso la muerte.

⚠ADVERTENCIA

- No use un protector de motor mojado o dañado, pues existe el riesgo de electrochoques o de daños al protector de motor.
- No lleve a cabo ninguna operación de servicio o mantenimiento distinta de las descritas en este instructivo, pues existe el riesgo de electro–choques o de daños al protector de motor.

La inobservancia de estas advertencias puede ocasionar lesiones graves o incluso la muerte.

Características

1. Ajuste de voltaje de línea: Gire este control al voltaje trifásico nominal de la línea que alimenta al motor que protegerá.
2. Ajuste de retardo de rearranque: Gire este control para ajustar el lapso entre el momento en que el protector de motor detecta la energía aceptable y el instante en que el protector de motor cierra los contactos.
   Nota: En aplicaciones con compresoras, el retardo de rearranque deberá ajustarse a un valor cercano al tiempo necesario para que la presión inicial se purgue de la compresora. En las demás aplicaciones, este retardo de rearranque por lo general se ajustará a 2 segundos. Si el control de retardo de rearranque está en la posición MAN (manual), será necesario girar el control de retardo de rearranque y sacarlo de esta posición para que pueda rearrancar el equipo.
3. Indicador de operación: El diodo emisor de luz (LED) se ilumina al energizarse el relevador de salida.
4. Tira terminal de entrada: Conecte aquí una fuente de energía trifásica.
5. Tira terminal de salida: Conecte aquí el motor que controlará o una alarma.

Especificaciones

Todos los modelos
Frecuencia ..... 50-60 Hz
Voltaje bajo (% del valor establecido)
  Activación 90%
  Restablecimiento 93%
Desequilibrio de voltaje (NEMA)
  Activación 6%
  Restablecimiento 4,5%
Tiempo de retardo de activación (nominal)
  Voltaje bajo ..... 4 segundos
  Fallas de desequilibrio o fases ..... 2 segundos
Protección contra voltajes
  transitorios (interna) ..... ±4 kV durante 50 µs según IEC 1000-4-5: 1995
Consumo de energía ..... 5 watts (máximo)

Sólo modelo 5260
Voltaje de línea trifásica ..... 475 a 600 VCA
Voltaje alto (% del valor establecido)
  Activación 110%
  Restablecimiento 107%
Tiempo de retardo de restablecimiento
  Después de una falla ..... manual y 2 a 300 segundos (seleccionable)
  Después de una pérdida de energía total ..... manual y 2 a 300 segundos (seleccionable)
Clasificación de contacto de salida (actividad piloto),
  doble polo, doble tiro ..... 470 VA a 600 VCA
Peso ..... 680 g (24 onzas)

Sólo modelo 5250
Voltaje de línea trifásica ..... 190 a 480 VCA
Voltaje alto (% del valor establecido)
  Activación 110%
  Restablecimiento 107%
Tiempo de retardo de restablecimiento
  Después de una falla ..... manual y 2 a 300 segundos (seleccionable)
  Después de una pérdida de energía total ..... manual y 2 a 300 segundos (seleccionable)
Clasificación de contacto de salida (actividad piloto),
  doble polo, doble tiro ..... 480 VA a 240 VCA o 10 A de propósito general
Peso ..... 397 g (14 onzas)

Sólo modelo 5102
Voltaje de línea trifásica ..... 190 a 480 VCA
Tiempo de retardo de restablecimiento
  Después de una falla ..... 2 segundos
  Después de una pérdida de energía total ..... 2 segundos
Clasificación de contacto de salida (actividad piloto),
  un polo, doble tiro ..... 480 VA a 240 VCA o 10 A de propósito general
Peso 397 g (14 onzas)

Sólo modelo 5201
Voltaje de línea trifásica ..... 190 a 480 VCA
Tiempo de retardo de restablecimiento
  Después de una falla ..... 2 segundos
  Después de una pérdida de energía total ..... 2 segundos
Clasificación de contacto de salida (actividad piloto),
  un polo, doble tiro ..... 480 VA a 120/240 VCA
Peso ..... 255 g (9 onzas)

⚠DANGER

Electrical Shock Hazard:
Lock out power during service and installation procedures.

Failure to observe this warning will result in severe injury or death.

Installation/Operation

1. Mount the motor protector in or near the motor control panel. If the location is wet or dusty, the motor protector should be mounted in a NEMA 4 or 12 enclosure.
2. Shut off and lock out the power.
3. Wiring to power:
   Note: When possible, use a phase sequence indicator to determine L1, L2 and L3 of the power source.
   Connect the three phases of the power source to the L1, L2 and L3 input contacts on the motor protector.
4. Connecting a motor:
   Connect the normally-open output contacts of the motor protector in series with the magnetic coil of the motor starter as shown in Figure 1.
   Note: Model 5250 or 5260, use either output terminal strip.
5. Connecting an alarm:
   Connect the normally-closed output contacts of the motor protector in series with an alarm, as shown in Figure 2.
   Note: Model 5250 or 5260, use either output terminal strip.

Figure 1

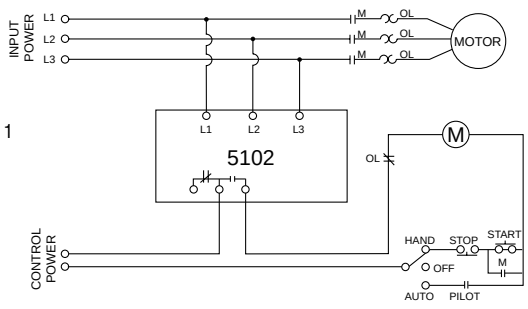

Figure 2

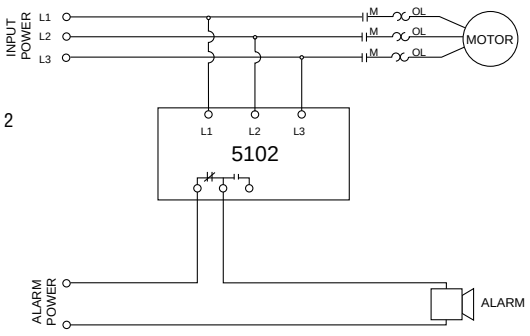

Settings

All models Line Voltage Adjust: Rotate the LINE VOLTAGE ADJUST to the nominal three-phase line voltage supplying power to the motor. The motor protector will protect your motor from voltage fluctuations based on this setting.

Model 5250 or 5260 Restart Delay: Rotate the RESTART DELAY adjustment to the desired position. The restart delay is the time from when the motor protector senses an acceptable power input until it closes its normally-open output contacts. For compressor applications, the restart delay should be set for the approximate time required for the head pressure to bleed off of the compressor. For other applications, the restart is typically set at two (2) seconds.

Power-up

Unlock the power. Turn on the power to the motor. After the Restart Delay, the motor protector will energize its output contacts and the RUN LIGHT will turn green. If the contacts do not energize and the RUN LIGHT does not turn green, then see the Troubleshooting section.

Troubleshooting

If the output relay does not energize, and the RUN LIGHT does not turn green after waiting for the restart delay time, then:

1. Rotate the RESTART DELAY adjustment clockwise 1/8 turn, above "2." It may be pointed at MAN or close enough to the manual reset position that the unit will not automatically restart. If the light does not blink, proceed to Step 2.
2. If the phases of the power source were not determined during installation, the motor protector may be wired incorrectly. Turn off and lock out the three-phase power. Switch any two leads: L1-L2, L2-L3, or L3-L1. Unlock and turn on the three-phase power.
3. If the motor protector still seems to be malfunctioning, measure the three line-to-line voltages. Calculate the average of the voltages. If the average is outside ±10% (over voltage protection available on Models 5250 and 5260) of the LINE VOLTAGE ADJUST, the motor protector is functioning properly.
4. If the average of the three line voltages is within ±10%, calculate the voltage unbalance using the NEMA method. To calculate the voltage unbalance, determine the line voltage with the greatest deviation from the average of the three line voltages by subtracting each line voltage from the average. Divide this greatest deviation by the average and multiply by 100 to obtain the percent voltage unbalance:
   % voltage unbalance =
   (max. deviation / Average of the three voltages) x 100
   If the percent voltage unbalance is greater than 4.5%, the motor protector is functioning properly.
5. If the percent voltage unbalance is less than 4.5%, contact Greenlee Customer Service.

Lifetime Limited Warranty

Greenlee warrants to the original purchaser of these goods for use that these products will be free from defects in workmanship and material for their useful life, excepting normal wear and abuse. This warranty is subject to the same terms and conditions contained in Greenlee's standard one year limited warranty.

For all Test Instrument repairs, ship units Freight Prepaid to:
Greenlee Textron, 4411 Boeing Drive, Rockford, IL 61109-2932 USA.

Mark all packages: Attention TEST INSTRUMENT REPAIR. For items not covered under warranty (such as dropped, abused, etc.), repair cost quote available upon request.

Note: Prior to returning any test instrument, please check replaceable batteries or make sure the battery is at full charge.

GREENLEE TEXTRON

Greenlee Textron / Subsidiary of Textron Inc.
4455 Boeing Drive, Rockford, IL 61109-2988 USA
Technical / Customer Service (International):
815/397-7070 • Fax: 815/397-9247
Customer Service (North America):
800/435-0786 • Fax: 800/451-2632, 815/397-1865
Canada Fax: 800/524-2853

⚠DANGER

Risque d'électrocution :
Mettre l'unité hors tension et couper le courant pendant les procédures de réparation et d'installation.

Le fait de ne pas respecter cette mise en garde entraînera de graves blessures ou la mort.

Installation/Fonctionnement

1. Monter le dispositif de protection du moteur sur le panneau de contrôle du moteur ou à côté de ce dernier. Si l'emplacement choisi est mouillé ou poussiéreux, le dispositif de protection du moteur devra être monté dans un réceptacle NEMA (National Electrical Manufacturers Association) de type 4 ou 12.
2. Mettre l'unité hors tension et couper le courant.
3. Raccordement à la source d'alimentation :
   Remarque : Dans la mesure du possible, utiliser un indicateur de séquence de phase pour déterminer L1, L2 et L3 au niveau de la source d'alimentation.
   Connecter les trois phases de la source d'alimentation aux bornes d'arrivée L1, L2 et L3 sur le dispositif de protection du moteur.
4. Connexion d'un moteur :
   Connecter les bornes de sortie habituellement ouvertes du protecteur de moteur en série sur la bobine magnétique du démarreur du moteur, tel que cela est illustré à la Figure 1.
   Remarque : Pour le modèle 5250 ou 5260, utiliser l'une ou l'autre des bornes de sortie.
5. Connexion d'une alarme :
   Connecter les bornes de sortie habituellement fermées du protecteur de moteur en série sur l'alarme, tel que cela est illustré à la Figure 2.
   Remarque : Pour le modèle 5250 ou 5260, utiliser l'une ou l'autre des bornes de sortie.

Figure 1

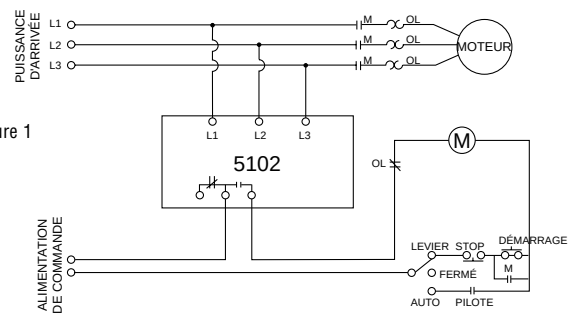

Figure 2

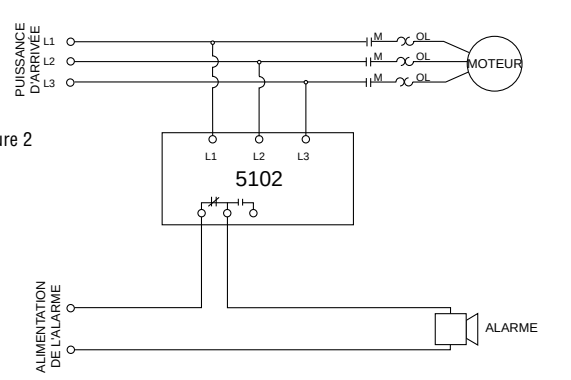

Réglages

Réglage de la tension de tous les modèles : Tourner le sélecteur LINE VOLTAGE ADJUST (REGLAGE DE LA TENSION) et le régler sur la tension nominale en ligne triphasique qui alimente le moteur. Le dispositif de protection du moteur protégera votre moteur contre les hausses et les baisses de tension, en fonction de ce réglage.

Temporisation de redémarrage du modèle 5250 ou 5260 : Tourner le sélecteur RESTART DELAY (TEMPORISATION DE REDEMARRAGE) sur la position souhaitée. La temporisation de redémarrage est le laps de temps qui doit s'écouler entre le moment où le dispositif de protection du moteur capte une arrivée d'électricité acceptable et le moment où il referme ses bornes de sortie habituellement ouvertes. Pour les applications utilisant un compresseur, la temporisation de redémarrage doit être réglée sur la durée approximative nécessaire pour que la pression de refoulement puisse être purgée du compresseur. Pour d'autres types d'applications, la temporisation de redémarrage est généralement définie sur deux (2) secondes.

Mise sous tension

Rétablir l'arrivée de courant. Mettre le moteur sous tension. Une fois la temporisation de redémarrage écoulée, le dispositif de protection du moteur activera ses bornes de sortie et le voyant vert RUN LIGHT (VOYANT DE MARCHE) s'allumera. Si les bornes ne sont pas activées et si le voyant vert RUN LIGHT (VOYANT DE MARCHE) ne s'allume pas, passer à la section Dépannage.

Dépannage

Si le relais de sortie n'est pas mis sous tension et si le voyant vert RUN LIGHT (VOYANT DE MARCHE) ne s'allume pas après la période de temporisation de redémarrage :

1. Tourner le sélecteur RESTART DELAY (TEMPORISATION DE REDEMARRAGE) dans le sens des aiguilles d'une montre pendant 1/8 de tour, au-dessus de « 2 ». Il est possible que le sélecteur soit réglé sur la position MAN ou qu'il soit trop près de la position de réenclenchement manuel, ce qui empêche le redémarrage de l'unité. Si le voyant ne clignote pas, passer à la seconde étape.
2. Si les phases de la source d'alimentation n'ont pas été définies pendant l'installation, il est possible que le dispositif de protection du moteur ne soit pas correctement connecté. Couper l'arrivée de courant triphasique et mettre l'unité hors tension. Interchanger deux câbles sur l'une des paires suivantes : L1-L2, L2-L3 ou L3-L1. Réactiver l'arrivée de courant et remettre l'unité sous tension.
3. Si le dispositif de protection du moteur semble toujours ne pas fonctionner correctement, mesurer les tensions entre les trois phases. Calculer la moyenne des trois tensions. Si la moyenne n'est pas comprise dans une marge de ± 10 % (au-delà de la protection contre les fluctuations de tensions disponible sur le modèle 5250 et 5260) de la tension définie pour le sélecteur LINE VOLTAGE ADJUST(REGLAGE DE LA TENSION), le dispositif de protection du moteur fonctionne correctement.
4. Si la moyenne des trois tensions est comprise dans une marge de ± 10 %, calculer le déséquilibre de tension en utilisant la méthode NEMA. Pour calculer le déséquilibre de tension, il est nécessaire de déterminer quelle tension parmi les trois s'écarte le plus de la moyenne générale. Pour ce faire, il convient de soustraire chaque tension entre phases de la moyenne, de diviser le plus grand écart trouvé par la moyenne et de multiplier le résultat par 100 pour obtenir le pourcentage de déséquilibre de la tension :
   % déséquilibre tension =
   (Écart max. / Moyenne des trois tensions) x 100
   Si le pourcentage de déséquilibre de la tension est supérieur à 4,5 %, le dispositif de protection du moteur fonctionne correctement.
5. Si le pourcentage de déséquilibre de la tension est inférieur à 4,5 %, appeler le Service Clients de Greenlee.

Garantie limitée pendant la durée de vie utile du produit

Greenlee garantit au premier acheteur de ce produit que ce dernier ne présentera pas de défaut de fabrication ni de main d'œuvre pendant la durée de vie utile du produit, à l'exception de son usure normale et de toute utilisation abusive du produit. Cette garantie est soumise aux mêmes modalités et conditions que celles stipulées dans la garantie standard d'un an de Greenlee.

Pour les réparations des instruments d'essai, envoyer les unités fret payé d'avance à : Greenlee Textron, 4411 Boeing Dr., Rockford, IL 61109-2932, États-Unis.

Identifier tous les colis : Envoyer les colis à l'attention de TEST INSTRUMENT REPAIR. Pour les produits qui ne sont pas couverts par la garantie (par exemple, s'ils sont tombés, s'ils ont fait l'objet d'une utilisation abusive, etc.), un devis du coût des réparations peut être envoyé sur simple demande.

Remarque : Avant de retourner des instruments d'essai, s'assurer que les batteries sont en bon état de marche ou qu'elles sont correctement chargées.

⚠PELIGRO

Riesgo de electrochoque.
Bloquee el suministro de energía durante los procedimientos de instalación y servicio.

La inobservancia de esta advertencia puede ocasionar lesiones graves o incluso la muerte.

Instalación y operación

1. Monte el protector de motor en o cerca del panel de control del motor. Si este lugar está húmedo o polvoriento, el protector de motor deberá montarse en una caja NEMA 4 o 12.
2. Apague y bloquee el suministro de energía.
3. Cableado eléctrico:
   Nota: De ser posible, use un indicador de secuencia de fases para determinar L1, L2 y L3 de la fuente de energía.
   Conecte las tres fases de la fuente de energía a los contactos de entrada L1, L2 y L3 del protector de motor.
4. Conexión a un motor:
   Conecte los contactos de salida (normalmente abiertos) del protector de motor en serie con la bobina magnética del arrancador del motor, como se ilustra en la figura 1.
   Nota: En el modelo 5250 o 5260, use cualquier de las tiras terminales de salida.
5. Conexión de una alarma:
   Conecte los contactos de salida (normalmente abiertos) del protector de motor en serie con la alarma, como se ilustra en la figura 2.
   Nota: En el modelo 5250 o 5260, use cualquier de las tiras terminales de salida.

Figura 1

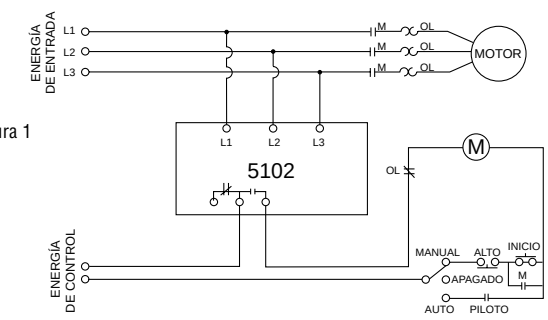

Figura 2

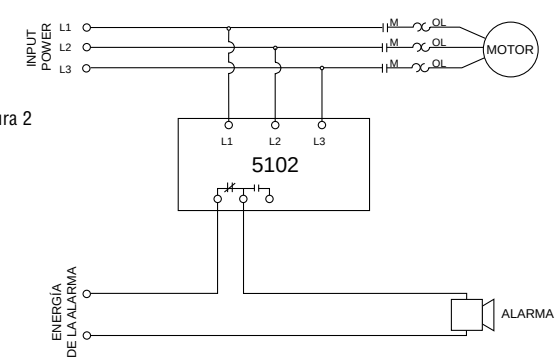

Configuración de valores:

Ajuste de voltaje de línea (todos los modelos): Gire el control de LINE VOLTAGE ADJUST (AJUSTE DE VOLTAJE DE LÍNEA) al valor del voltaje nominal de la línea trifásica que suministra energía al motor. El protector de motor protegerá al motor de las fluctuaciones de voltaje usando este valor como base.

Retardo de rearranque (modelo 5250 o 5260): Gire el control de RESTART DELAY (RETARDO DE REARRANQUE) a la posición deseada. El retardo de rearranque es el lapso entre el momento en que el protector de motor detecta una energía de entrada aceptable y el instante en que cierra los contactos normalmente abiertos. En aplicaciones con compresoras, el retardo de rearranque deberá ajustarse a un valor aproximadamente igual al tiempo necesario para que la presión inicial se purgue de la compresora. En las demás aplicaciones, el valor de rearranque típico es de 2 segundos.

Encendido

Desbloquee el suministro de energía y encienda el motor. Después del retardo de rearranque, el protector de motor energizará los contactos de salida y el RUN LIGHT (INDICADOR DE OPERACIÓN) se iluminará con un color verde. Consulte la sección de resolución de problemas si los contactos no se energizan y el RUN LIGHT (INDICADOR DE OPERACIÓN) no se ilumina con color verde.

Resolución de problemas

Si el relevador de salida no se energiza y el RUN LIGHT (INDICADOR DE OPERACIÓN) no se ilumina con un color verde después del período de retardo de rearranque, haga lo siguiente:

1. Gire el control de RESTART DELAY (RETARDO DE REARRANQUE) un octavo de vuelta en sentido de las manecillas del reloj, para que apunte al número "2". También puede ubicarse en la posición MAN o lo suficientemente cerca de la posición de restablecimiento manual para que la unidad no rearranque en forma automática. Si el indicador no parpadea, continúe en el paso 2.
2. Si no determinó las fases de la fuente de energía durante la instalación, es posible que el protector de motor esté mal cableado. Apague y bloquee el suministro de energía trifásica e intercambie dos de los conductores: L1-L2, L2-L3 o L3-L1. Desbloquee y encienda el suministro de energía trifásica.
3. Si el protector de motor aún no parece funcionar correctamente, mida los tres voltajes entre líneas y calcule la media de los voltajes. Si la media está fuera del intervalo de ±10% (el modelo 5250 y 5260 incluye protección contra sobrevoltajes) con respecto al valor del LINE VOLTAGE ADJUST (AJUSTE DE VOLTAJE DE LÍNEA), el protector de motor estará funcionando correctamente.
4. Si la media de los tres voltajes de línea está dentro del intervalo de ±10%, calcule el desequilibrio de voltaje con el método NEMA. Para calcular el desequilibrio de voltaje, determine cuál es el voltaje de línea con mayor desviación con respecto a la media de los tres voltajes de línea, restando cada voltaje de línea a la media. Divida la desviación mayor entre la media y multiplique el resultado por 100 para obtener el porcentaje de desequilibrio de voltaje:
   % de desequilibrio de voltaje =
   (desviación máxima / media de los tres voltajes) x 100
   Si el porcentaje de desequilibrio de voltaje es mayor que el 4,5%, el protector de motor funciona correctamente.
5. Si el porcentaje de desequilibrio de voltaje es menor que el 4,5%, llame al Departamento de Atención a Clientes de Greenlee.

Garantía limitada para toda la vida

Greenlee garantiza al comprador usuario original de los bienes que estos productos estarán libres de defectos de mano de obra y materiales durante su vida útil, excepto por el desgaste normal y el abuso. La garantía está sujeta a los mismos términos y condiciones que se enuncian en la garantía limitada estándar por un año de Greenlee.

Todos los instrumentos de prueba deberán enviarse con flete pagado a: Greenlee Textron, 4411 Boeing Drive, Rockford, IL 61109-2932 EE.UU.

Los paquetes deberán estar rotulados con la leyenda siguiente*: Attention TEST INSTRUMENT REPAIR*. En el caso de unidades no cubiertas por la garantía (por ejemplo, dañadas por caídas, sometidas a abuso, etc.), puede solicitar una cotización del costo de reparación.

Nota: Antes de devolver un instrumento de prueba, por favor revise las baterías reemplazables o cerciórese de que la batería recargable esté completamente cargada.

30072-013-29H
7/2003
Raleigh, NC, USA

Replaces / Reemplaza / Remplace 30072-013-29G 8/1999

Motor Logic™ Solid-State Overload Relay
Relevador de sobrecarga de estado sólido Motor Logic™
Relais de surcharge transistorisé Motor Logic^{MC}

Class Clase Classe	Type Tipo Type	Series Serie Série
9065	SS, SF, SR, ST	D

Retain for future use. / Conservar para uso futuro. / À conserver pour usage ultérieur.

INTRODUCTION

Motor Logic solid-state overload relays (SSOLRs) are self-powered devices designed to protect 50/60 Hz, three-phase AC motors from overload and phase-loss conditions. The feature version also provides selectable trip class and Class 2 ground fault detection.

INTRODUCCIÓN

Los relevadores de sobrecarga de estado sólido (RSES) Motor Logic son dispositivos autoalimentados que han sido diseñados para proteger motores de ~ (c.a.) de tres fases, 50/60 Hz, contra sobrecargas y pérdidas de fase. Estos relevadores especiales también proporcionan una clase de disparo que es posible seleccionar y detección de fallas a tierra clase 2.

INTRODUCTION

Les relais de surcharge transistorisés (RSCT) Motor Logic sont des dispositifs auto-alimentés conçus pour protéger les moteurs ca triphasés, 50/60 Hz, des conditions de surcharge et de perte de phase. La version décrite fournit en outre une classe sélectionnable de déclenchement et la détection de défaut de mise à la terre, classe 2.

Figure / Figura / Figure 1 : Selector Switch and Trip Indicator / Interruptor selector e indicador de disparo / Sélecteur et voyant de déclenchement

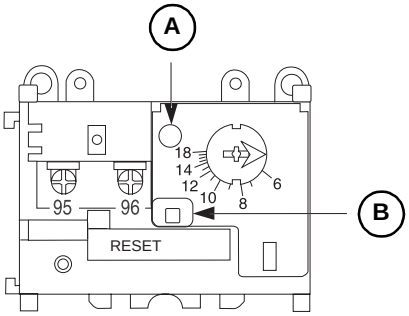

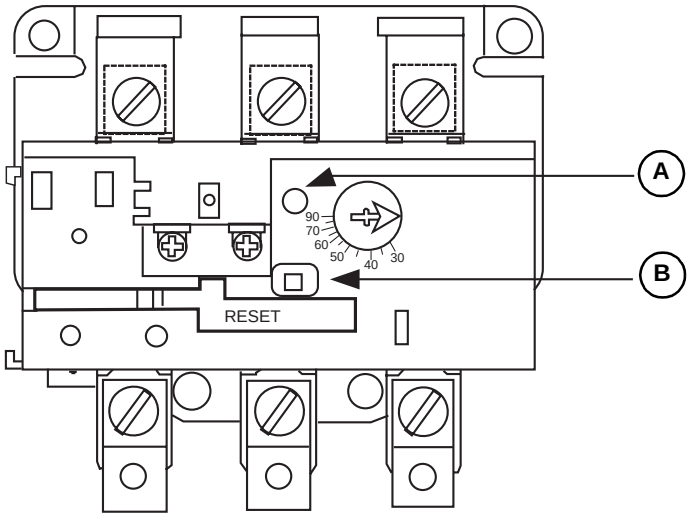

A Trip Class 10 or Class 20 Selector Switch (Feature Version Only) /
Interruptor selector de disparo clase 10 o clase 20 (versión especial solamente) /
Sélecteur de classe 10 ou 20 de déclenchement (version améliorée seulement)

B Yellow Trip Indicator for Overload, Phase Loss, or Phase Unbalance /
Indicador de disparo amarillo para sobrecarga, pérdida de fase o desequilibrio de fase /
Voyant de déclenchement jaune de surcharge, perte de phase ou déséquilibre de phase

⚠ DANGER / PELIGRO / DANGER

HAZARDOUS VOLTAGE

Disconnect all power before working on equipment.

Failure to follow this instruction will result in death or serious injury.

TENSIÓN PELIGROSA

Desconecte toda la alimentación antes de efectuar cualquier trabajo en el equipo.

El incumplimiento de esta instrucción, podrá causar la muerte o lesiones serias.

TENSION DANGEREUSE

Coupez toutes les alimentations avant d'y travailler.

Si cette précaution n'est pas respectée, cela entraînera la mort ou des blessures graves.

RETROFIT APPLICATIONS

The Motor Logic SSOLR can serve as a replacement for an SSOLR in existing devices. In some applications, an SSOLR may not be suitable to retrofit a non-SSOLR (e.g., melting alloy or bimetallic) due to lower system impedance.

APLICACIONES DE MODERNIZACIÓN (RETROFIT)

El RSES Motor Logic se puede utilizar como un RSES de repuesto en dispositivos existentes. En algunas aplicaciones, no es posible utilizar un RSES para modernizar un relevador que no sea RSES (por ejemplo, relevadores bimetálicos o de aleación fusible) debido a que la impedancia del sistema es más baja.

APPLICATIONS DE MODERNISATION

Le RSCT Motor Logic peuvent servir de remplacement pour un RSCT de dispositifs existants. Dans certaines applications, un RSCT peut ne pas convenir à la modernisation d'un non RSCT (par ex., relais à fusion d'alliage ou bi-métallique) par suite d'une plus faible impédance du système.

⚠ WARNING / ADVERTENCIA / AVERTISSEMENT

LOSS OF SHORT-CIRCUIT INTERRUPTING ABILITY

- The current interrupting rating may be compromised when retrofitting a non-SSOLR with an SSOLR.
- Before retrofitting existing devices with an SSOLR, consult your local Square D field office for information on the suitability of the application.

Failure to follow this instruction can result in death, serious injury, or equipment damage.

PÉRDIDA DE HABILIDAD DE INTERRUPCIÓN DE CORTOCIRCUITO

- La corriente nominal de interrupción se puede ver afectada al modernizar un relevador que no sea RSES con uno que si sea RSES.
- Antes de modernizar dispositivos existentes con un RSES, póngase en contacto con su oficina local de Square D para obtener información sobre la idoneidad de la aplicación.

El incumplimiento de esta instrucción puede causar la muerte, lesiones serias o daño al equipo.

PERTE DE CAPACITÉ D'INTERRUPTION SUR COURT-CIRCUIT

- La valeur du courant nominal d'interruption peut être compromise lors de la modernisation d'un non RSCT à l'aide d'un RSCT.
- Avant de moderniser des dispositifs existants avec un RSCT, consultez le bureau local Square D pour obtenir des informations sur la convenance de l'application.

Si cette précaution n'est pas respectée, cela peut entraîner la mort, des blessures graves ou des dommages matériels.

NOTE: When retrofitting size 3 or 4 Square D starters that have a melting alloy overload relay, use reset extender kit 9999ER4.

NOTA: Al modernizar los arrancadores de Square D tamaño 3 ó 4 con un relevador de sobrecarga de aleación fusible, utilice el accesorio de extensión de la barra de restablecimiento 9999ER4.

REMARQUE : Lors de la modernisation de démarreurs Square D de taille 3 ou 4 munis d'un relais de surcharge à fusion d'alliage, utiliser le kit de prolongation de la barre de réarmement 9999ER4.

Figure / Figura / Figure 2 : Mounting Screw Torques for Retrofit Starters / Valores de par de apriete del tornillo de montaje para los arrancadores de modernización / Couple de serrage des vis de montage pour les démarreurs de modernisation

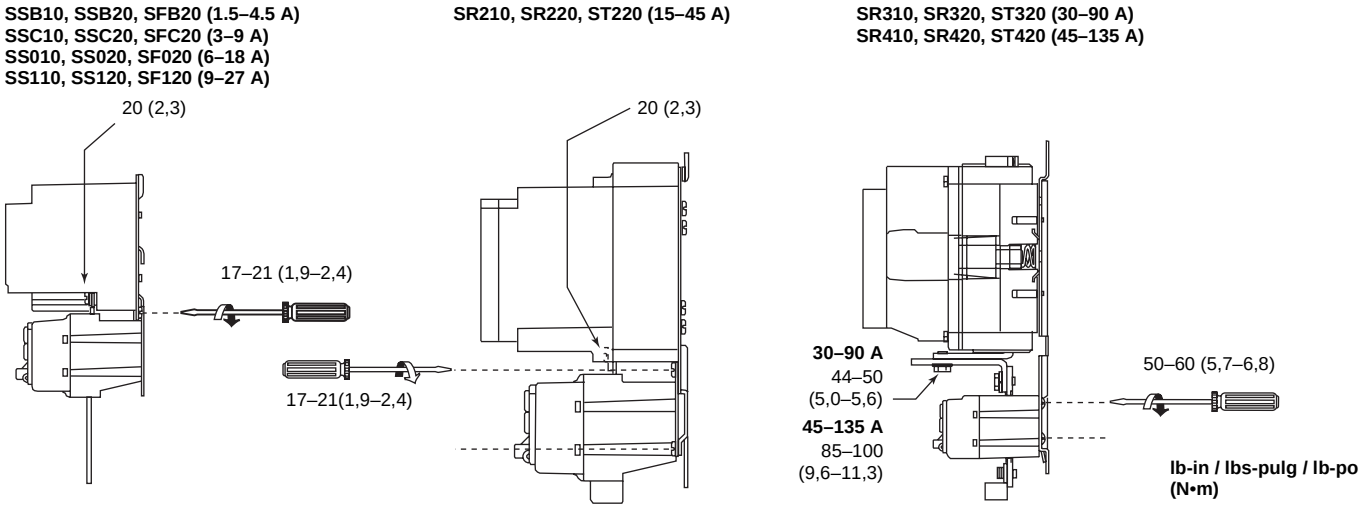

© 1994–2003 Schneider Electric All Rights Reserved / Reservados todos los derechos / Tous droits réservés

INSTALLATION AND WIRING

Use 60/75 °C copper wire only, solid or stranded.

INSTALACIÓN Y ALAMBRADO

Utilice sólo conductores de cobre para 60/75 °C, sencillos o trenzados.

INSTALLATION ET CÂBLAGE

Utiliser un fil en cuivre de 60/75 °C uniquement, rigide ou toronné.

Figure / Figura / Figure 3 : Motor Logic Configurations / Configuraciones de los Motor Logic / Configurations de Motor Logic

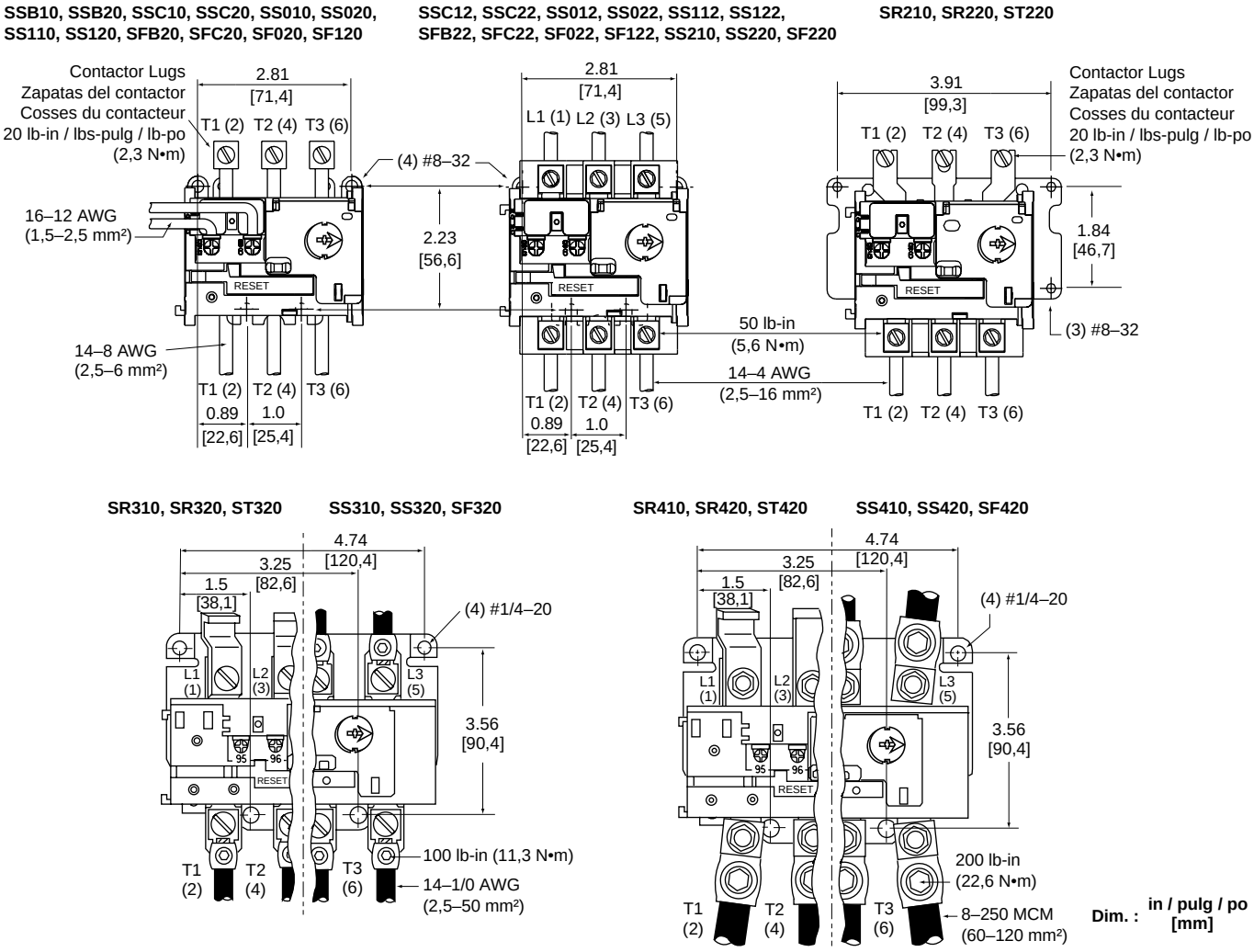

© 1994–2003 Schneider Electric All Rights Reserved / Reservados todos los derechos / Tous droits réservés

Figure / Figura / Figure 4 : Typical Control Diagram / Diagrama típico de control / Schéma de câblage de contrôle typique

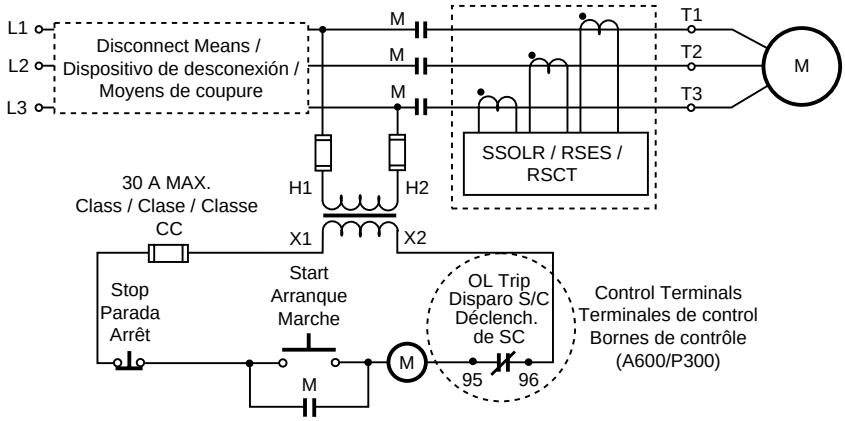

SPECIFICATIONS | ESPECIFICACIONES | SPÉCIFICATIONS

Figure / Figura / Figure 5 : Operating Temperature Range / Gama de la temperatura de funcionamiento / Gamme de température de fonctionnement

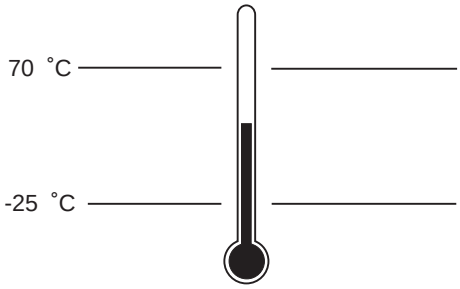

Figure / Figura / Figure 6 : Cold-Start Trip Curves / Curvas de disparo de arranque en frío / Courbes de déclenchement de démarrage à froid

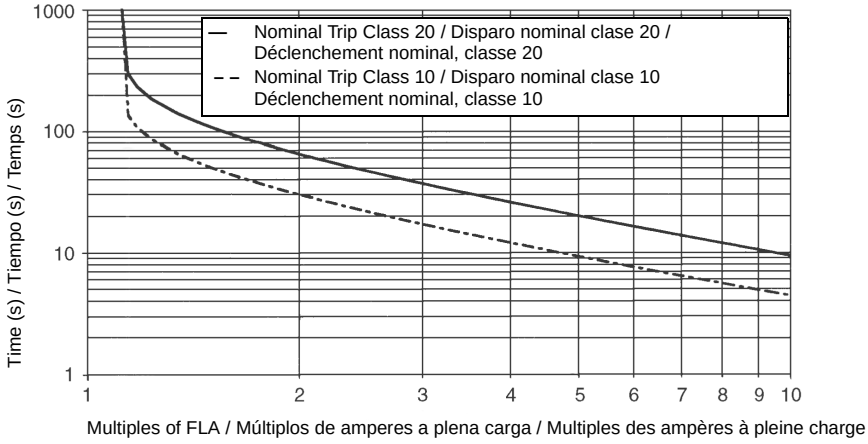

© 1994–2003 Schneider Electric All Rights Reserved / Reservados todos los derechos / Tous droits réservés

OPERATION

FUNCIONAMIENTO

FONCTIONNEMENT

CAUTION / PRECAUCIÓN / ATTENTION

INADEQUATE MOTOR PROTECTION

- Set the current adjustment dial according to the instructions before operating the equipment.
- For the feature version, set the trip class to Class 10 or Class 20 as appropriate. The default setting is Class 10.

Failure to follow these instructions can result in motor damage.

PROTECCIÓN INADECUADA DEL MOTOR

- Ajuste el selector de la corriente de acuerdo con las instrucciones antes de hacer funcionar el equipo.
- En la versión especial, ajuste la clase de disparo en la clase 10 o clase 20, según sea apropiado. El ajuste por omisión es la clase 10.

El incumplimiento de estas instrucciones puede causar daño al motor.

PROTECTION DU MOTEUR INADÉQUATE

- Réglez le cadran de réglage du courant en fonction des directives avant d'utiliser l'appareil.
- Pour la version décrite, réglez la classe de déclenchement à la classe 10 ou classe 20 selon ce qui convient. Le réglage par défaut est la classe 10.

Si ces précautions ne sont pas respectées, cela peut endommager le moteur.

Figure / Figura / Figure 7 : Setting the Current Adjustment Dial / Ajuste del selector de la corriente / Réglage du cadran de réglage de courant

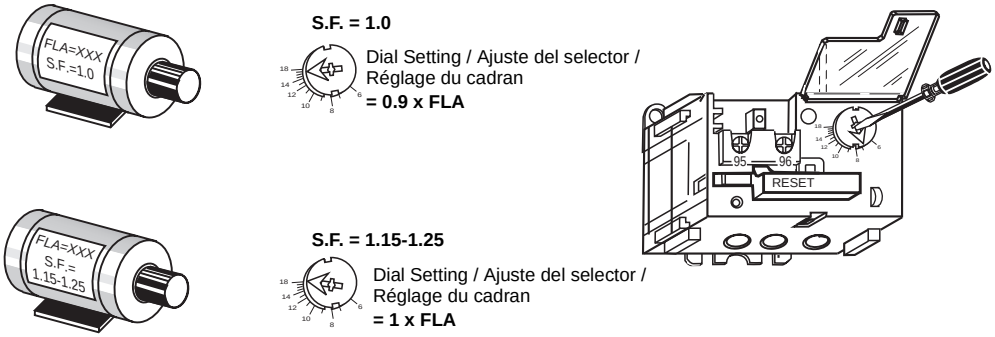

S. F. =
Service Factor /
Factor de servicio /
Facteur de service

FLA =
Full-load amperes
Amperes a plena carga
Ampères à pleine charge

Figure / Figura / Figure 8 : Mechanical Trip Test Function / Función de la prueba de disparo mecánico / Fonction d'essai de déclenchement mécanique

(1)

Disconnect all power. /

Desconecte toda la alimentación. /

Couper toute l'alimentation.

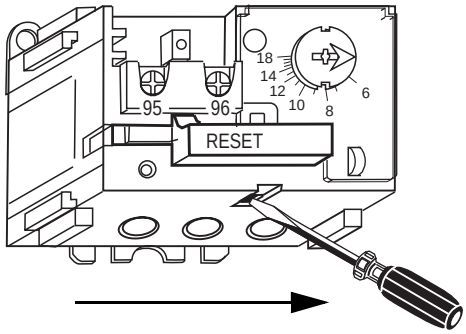

(2)

Slide the white test switch to the right. /

Deslice el interruptor de prueba blanco hacia la derecha. /

Faire glisser l'interrupteur d'essai blanc vers la droite.

© 1994–2003 Schneider Electric All Rights Reserved / Reservados todos los derechos / Tous droits réservés

Phase Loss/Phase Unbalance

The phase loss/phase unbalance circuitry initiates a trip within 3 seconds if:

- A current unbalance of 25% or greater is present.
- One of the three phase currents is not present.

The phase loss/phase unbalance circuitry can detect a phase loss in either the primary or secondary of a star-delta or delta-star transformer.

The phase loss/phase unbalance trip function is fully operational at currents as low as 75% of the minimum marked dial setting on the device and provides protection for lightly loaded motors.

Class 2 Ground Fault Detection (Feature Version)

Feature Version SSOLRs incorporate Class 2 ground fault detection for protection of equipment. These SSOLRs trip within 3 seconds if the ground fault exceeds 25% of the MFLC. The trip is inhibited when the measured current exceeds approximately ten times the maximum setting of the current adjustment dial, to allow coordination with the short circuit protective device (SCPD). The overload trip function is not affected.

Pérdida de fase/Desequilibrio de fase

Los circuitos de detección de pérdida de fase/desequilibrio de fase inician un disparo dentro de los 3 segundos cuando:

- Hay un desequilibrio de corriente del 25% o mayor.
- Una de las tres corrientes de fase no está presente.

Los circuitos de detección de pérdida de fase/desequilibrio de fase pueden detectar una pérdida de fase ya sea en el primario o secundario de un transformador estrella-delta o delta-estrella.

La función de disparo de pérdida de fase/desequilibrio de fase funciona completamente en corrientes tan bajas como el 75% del ajuste mínimo del selector marcado en el dispositivo y proporciona protección para motores ligeramente cargados.

Detección de fallas a tierra clase 2 (versión especial)

Los RSES de versión especial incorporan la detección de fallas a tierra clase 2 para proteger el equipo. Estos RSES se disparan dentro de los 3 segundos si la falla a tierra excede el 25% de la CPCM. El disparo se suprime cuando la corriente medida excede aproximadamente diez veces el ajuste máximo del selector de la corriente, para permitir la coordinación con el dispositivo de protección contra cortocircuitos (DPCC). La función de disparo de sobrecarga no se ve afectada.

Perte de phase/Déséquilibre de phase

Les circuits de détection de perte ou de déséquilibre de phase initient un déclenchement en 3 secondes si :

- Un déséquilibre de courant de 25 % ou supérieur est présent.
- L'un des trois courants de phase n'est pas présent.

Les circuits de détection de perte ou de déséquilibre de phase détectent une perte de phase du primaire ou du secondaire d'un transformateur étoile-triangle ou triangle-étoile.

La fonction de déclenchement sur perte ou déséquilibre de phase est pleinement opérationnelle à des courants aussi faibles que 75 % du réglage minimum du cadran marqué sur le dispositif et elle fournit une protection pour les moteurs légèrement chargés.

Détection de défaut de m.à.l.t. de classe 2 (version améliorée)

Les RSCT de version améliorée comprennent une détection de défaut à la terre de classe 2 pour la protection de l'appareil. Ces RSCT se déclenchent dans les 3 secondes si le défaut à la terre dépasse 25 % du CPCM (courant à pleine charge du moteur). Le déclenchement est inhibé lorsque le courant mesuré dépasse de dix fois environ le réglage maximum du cadran de réglage de courant, afin de permettre la coordination avec le dispositif de protection contre les courts-circuits (SCPD). La fonction de déclenchement de surcharge n’est pas affectée.

Electrical equipment should be installed, operated, serviced, and maintained only by qualified personnel. No responsibility is assumed by Schneider Electric for any consequences arising out of the use of this material.

Schneider Electric
8001 Highway 64 East
Knightdale, NC 27545 USA
1-888-SquareD (1-888-778-2733)
www.SquareD.com

Solamente el personal especializado deberá instalar, hacer funcionar y prestar servicios de mantenimiento al equipo eléctrico. Schneider Electric no asume responsabilidad alguna por las consecuencias emergentes de la utilización de este material.

Importado en México por:
Schneider Electric México, S.A. de C.V.
Calz. J. Rojo Gómez 1121-A
Col. Gpe. del Moral 09300 México, D.F.
Tel. 55-5804-5000
www.schneider-electric.com.mx

Seul un personnel qualifié doit effectuer l’installation, l’utilisation, l’entretien et la maintenance du matériel électrique. Schneider Electric n’assume aucune responsabilité des conséquences éventuelles découlant de l’utilisation de cette documentation.

Schneider Canada Inc.
19 Waterman Avenue, M4B 1 Y2
Toronto, Ontario
1-800-565-6699
www.schneider-electric.ca

* *a brand of Schneider Electric. / una marca de Schneider Electric. / une marque de Schneider Electric.*

© 1994–2003 Schneider Electric
All Rights Reserved / Reservados todos los derechos / Tous droits réservés

Type S Contactors and Starters

Class 8536/8502/8736/8702/8810/8811/8812

CONTENTS

Description	Page
Magnetic Contactors and Starters	1
Reversing Magnetic Starters and Contactors	25
Motor Starters Multi-Speed	39

SQUARE D
GROUPE SCHNEIDER

Contents

SECTION 1 – MAGNETIC CONTACTORS AND STARTERS

Application Data – Class 8502, 8536 2-3
Selection – Class 8502 4-7
Selection – Class 8536 8-12
Application Data – Class 8502, 8536 13-16
Approximate Dimensions, Shipping Weights – Class 8502, 8536 17-22
Application Data – Class 8502 Vacuum Contactors 23
Selection and Pricing – Class 8502 24

© 1998 Square D All Rights Reserved

Type SCO2
Size 1, 3-Pole Contactor

Type SCO3
Size 1, 3-Pole Starter

Starter with MOTOR LOGIC

Starter with Melting Alloy

AC MAGNETIC CONTACTORS CLASS 8502

General Information

Class 8502 Type S magnetic contactors are used to switch heating loads, capacitors, transformers, and electric motors where overload protection is separately provided. Class 8502 contactors are available in NEMA Sizes 00-7. Type S contactors are designed for operation at 600 Volts, AC 50-60 Hertz.

Holding Circuit Contact

A normally open holding circuit contact for three wire control is provided on all contactors as standard. Sizes 00-2 contactors use a Class 9999 SX11 auxiliary contact as the holding circuit contact. Sizes 3-7 contactors use a Class 9999 SX6 auxiliary contact as the holding circuit contact. See Class 9999 for the holding circuit contact electrical ratings. On Size 00-1 single phase contactors, a power pole is used as the holding circuit contact and therefore has the same rating as the power contacts.

Enclosures

Class 8502 magnetic contactors are available in the following enclosures:

- NEMA Type 1 General Purpose
- NEMA Type 4 & 4X Watertight and Dusttight Stainless Steel
- NEMA Type 4X Watertight, Dusttight, and Corrosion Resistant Glass — Polyester
- NEMA Type 7 & 9 Bolted and Spin-Top for Hazardous Locations
- NEMA Type 12 Dusttight and Driptight for Industrial Use

The NEMA Type 4 & 4X stainless steel enclosure (Sizes 0-5) has a brushed finish. For an electropolished finish, specify Form G16 and add 15% to the price of the standard device.

Also, NEMA Type 12 devices are available UL Listed for use in Class II, Division 2, Group G and Class III, Divisions 1 and 2 locations. Request Form G21, no additional charge.

Separate enclosures are available, see Class 9991.

AC MAGNETIC STARTERS CLASS 8536

General Information

Class 8536 Type S magnetic starters are used for full voltage starting and stopping AC squirrel cage motors. Motor overload protection is provided by melting alloy type thermal overload relays. Class 8536 starters are available in NEMA Sizes 00-7. Type S starters are designed for operation at 600 Volts AC, 50-60 Hertz.

Holding Circuit Contact

A normally open holding circuit contact for three wire control is provided on all contactors as standard. Sizes 00-2 contactors use a Class 9999 SX11 auxiliary contact as the holding circuit contact. Sizes 3-7 contactors use a Class 9999 SX6 auxiliary contact as the holding circuit contact. See Class 9999 for the holding circuit contact electrical ratings.

Overload Relays with Melting Alloys

Class 8536 Type S Sizes 00-6 starters are provided with a melting alloy thermal overload relay as standard. Interchangeable thermal units are available in standard trip (Class 20) Sizes 00-6, quick trip (Class 10) Sizes 00-4, and slow trip (Class 30) Sizes 00-3. Single-phase starters use one thermal unit, 3-phase starters use three thermal units.

Class 8536 Size 7 starters are provided with solid state Motor Logic which has selectable trip Class10/20, Ground fault detection, and Communication capabilities for future enhancement. The solid state overload relay is ambient insensitive and features phase loss, phase unbalance and over-current protection.

MOTOR LOGIC™ Solid State Overload Relay (SSOLR)

Solid state overload relays are available for Sizes 00 – 7 starters. These ambient insensitive overload relays provide phase loss protection, phase unbalance protection and a LED power indicator. For additional information, see the Class 9065 catalog section. To order Type S starters with solid state overload relays, see Factory Modification (FORMS).

Bimetallic overload relays are also available for Sizes 0-6. Ambient Compensated and Non-compensated versions are supplied with manual

© 1998 Square D All Rights Reserved

and automatic reset, trip current adjustment, and an alarm contact on Sizes 0-2. For additional information, see the Class 9065 catalog section. To order Type S starters with bimetallic overload relays, see Factory Modifications (FORMS).

Enclosures

Class 8536 magnetic starters are available in the following enclosures.

- NEMA Type 1 General Purpose Enclosure
- NEMA Type 3R Rainproof, Sleet Resistant for Outdoor Use
- NEMA Type 4 & 4X Watertight and Dusttight
- NEMA Type 4X Watertight, Dusttight, and Corrosion Resistant Glass – Polyester
- NEMA Type 7 & 9 Bolted and Spin-Top for Hazardous Locations
- NEMA Type 9 Bolted for Hazardous Locations
- NEMA Type 12 Dusttight and Driptight for Industrial Use

The NEMA Type 4 & 4X stainless steel enclosure (Sizes 0-5) has a brushed finish. For an electropolished finish, specify Form G16 and add 15% to the price of the standard device. Sizes 6 & 7 are painted sheet steel and are rated NEMA 4 ONLY.

Also NEMA Type 12 devices are available UL Listed for use in Class II, Division 2, Group G and Class III, Divisions 1 and 2 locations. Specify Form G21, no additional charge.

Separate enclosures are available, see Class 9991.

Coil Voltages

AC coils are available for application on 50-60 Hertz. NEMA Sizes 00-5 are supplied with coils that are designed to operate satisfactorily on line voltages of 85% – 110% of rated voltage. NEMA Size 6 and 7 contactors are supplied with a DC coil operated by a solid state rectifier circuit that is powered by an AC source.

Please note that **Voltage Codes** have been added to the Type designations in order to improve customer service. It is necessary to include the Voltage Code when ordering contactors and starters. Also, 120 Volt Polyphase contactors and starters will be wired for separate control.

Auxiliary Contacts

Additional auxiliary contacts may be added to Type S contactors. See Page 15 for maximum number of auxiliary units and Form designations for factory installed auxiliary contacts.

Type S Accessories

Additional accessories such as power poles, pneumatic timer attachments, and cover mounted control stations are available as factory or field modifications.

© 1998 Square D All Rights Reserved

Full Voltage Contactors — NEMA
Selection – Class 8502

Type SC02
Size 1, 3-Pole Contactor

3-Pole Polyphase — 600 Volts AC Maximum — 50-60 Hertz

NEMA Size	Continuous Current Ratings	Motor Volts	Max. HP	∗ Coil Voltage	Open Type	NEMA Type 1 General Purpose Enclosure	NEMA Type 4 & 4X Watertight, Dusttight Brushed Stainless Steel Enclosure (Size 0-5)♦
					Type	Type	Type
00	9	Separate Control†		120	SAO12V02S	SAG12V02S	USE Size 0
		200	1½	208	SAO12V08	SAG12V08	
		230	1½	240	SAO12V03	SAG12V03	
		460	2	480	SAO12V06	SAG12V06	
		575	2	600	SAO12V07	SAG12V07	
0	18	Separate Control†		120	SBO2V02S	SBG2V02S	SBW12V02S
		200	3	208	SBO2V08	SBG2V08	SBW12V08
		230	3	240	SBO2V03	SBG2V03	SBW12V03
		460	5	480	SBO2V06	SBG2V06	SBW12V06
		575	5	600	SBO2V07	SBG2V07	SBW12V07
1	27	Separate Control†		120	SCO2V02S	SCG2V02S	SCW12V02S
		200	7½	208	SCO2V08	SCG2V08	SCW12V08
		230	7½	240	SCO2V03	SCG2V03	SCW12V03
		460	10	480	SCO2V06	SCG2V06	SCW12V06
		575	10	600	SCO2V07	SCG2V07	SCW12V07
2	45	Separate Control†		120	SDO2V02S	SDG2V02S	SDW12V02S
		200	10	208	SDO2V08	SDG2V08	SDW12V08
		230	15	240	SDO2V03	SDG2V03	SDW12V03
		460	25	480	SDO2V06	SDG2V06	SDW12V06
		575	25	600	SDO2V07	SDG2V07	SDW12V07
3	90	Separate Control†		120	SEO2V02S	SEG2V02S	SEW12V02S
		200	25	208	SEO2V08	SEG2V08	SEW12V08
		230	30	240	SEO2V03	SEG2V03	SEW12V03
		460	50	480	SEO2V06	SEG2V06	SEW12V06
		575	50	600	SEO2V07	SEG2V07	SEW12V07
4	135	Separate Control†		120	SFO2V02S	SFG2V02S	SFW12V02S
		200	40	208	SFO2V08	SFG2V08	SFW12V08
		230	50	240	SFO2V03	SFG2V03	SFW12V03
		460	100	480	SFO2V06	SFG2V06	SFW12V06
		575	100	600	SFO2V07	SFG2V07	SFW12V07
5	270	Separate Control†		120	SGO2V02S	SGG2V02S	SGW12V02S
		200	75	208	SGO2V08	SGG2V08	SGW12V08
		230	100	240	SGO2V03	SGG2V03	SGW12V03
		460	200	480	SGO2V06	SGG2V06	SGW12V06
		575	200	600	SGO2V07	SGG2V07	SGW12V07
6	540	Separate Control†		120	SHO2V02S	SHG2V02S	SHW12V02S
		200	150	208	SHO2V08	SHG2V08	SHW12V08
		230	200	240	SHO2V03	SHG2V03	SHW12V03
		460	400	480	SHO2V06	SHG2V06	SHW12V06
		575	400	600	SHO2V07	SHG2V07	SHW12V07
7	810	Separate Control†		120	SJO2V02S	SJG2V02S	SJW12V02S
		200	. . .	208	SJO2V08	SJG2V08	SJW12V08
		230	300	240	SJO2V03	SJG2V03	SJW12V03
		460	600	480	SJO2V06	SJG2V06	SJW12V06
		575	600	600	SJO2V07	SJG2V07	SJW12V07

♦ Size 6 and 7 are painted sheet steel rated NEMA Type 4 only.
† 120 Volt Polyphase contactors are wired for separate control.
∗ Coil voltage code must be specified to order this product. Refer to standard voltage codes listed below and insert as shown in How to Order.

Coil Voltage Codes

Voltage 60 Hz	Voltage 50 Hz	Code
24▲	. . .	VO1
120	110	VO2
208	. . .	VO8
240	220	VO3
480	440	VO6
600	550	VO7
Specify	Specify	V99

▲ 24 V coils are not available on Sizes 4-7. On Sizes 00-3, where 24 V coils are available, Form S (separate control) must be specified.

File E78351
CCN NLDX

File LR12751
Class 3211-04

File 60905
Class 3211-04

IEC 947-4-1
Sizes 00-5 only

How to Order:

To Order Specify:	Catalog Number			
• Class Number • Type Number • Coil Voltage Code • Form(s)	Class	Type	Coil Voltage Code	Form(s)
	8502	SBG2	VO2	P1S

Factory Modifications (FORMS) .....Refer to Catalog 9999CT9701
Application Data ..... Pages 13-16
Dimensions ..... Pages 17-20
Separate Enclosures (Class 9991) .....Refer to Catalog 9999CT9701
Replacement Parts (Class 9998) .....Refer to Catalog 9999CT9701
Type S Accessories (Class 9999) .....Refer to Catalog 9999CT9701

© 1998 Square D All Rights Reserved

3-Pole Polyphase — 600 Volts AC Maximum — 50-60 Hertz

NEMA Size	Continuous Current Ratings	Motor Volts	Max. HP	* Coil Voltage	NEMA Type 4X Watertight, Dusttight, Corrosion-Resistant Glass-Polyester Enclosure	NEMA Type 7 & 9 Hazardous Locations Class I, Groups C & D Class II, Groups E, F, & G			NEMA Type 12 Dusttight & Driptight Industrial Use Enclosure
					Type	Bolted Type		SPIN TOP® Type	Type
						Cast Iron■	Cast Aluminum		
00	9	Separate Control†		120	Use Size 0	Use Size 0		Use Size 0	Use Size 0
		200	1½	208					
		230	1½	240					
		460	2	480					
		575	2	600					
0	18	Separate Control†		120	SBW22V02S	SBT2V02S	SBT42V02S	SBR2V02S	SBA2V02S
		200	3	208	SBW22V08	SBT2V08	SBT42V08	SBR2V08	SBA2V08
		230	3	240	SBW22V03	SBT2V03	SBT42V03	SBR2V03	SBA2V03
		460	5	480	SBW22V06	SBT2V06	SBT42V06	SBR2V06	SBA2V06
		575	5	600	SBW22V07	SBT2V07	SBT42V07	SBR2V07	SBA2V07
1	27	Separate Control†		120	SCW22V02S	SCT2V02S	SCT42V02S	SCR2V02S	SCA2V02S
		200	7½	208	SCW22V08	SCT2V08	SCT42V08	SCR2V08	SCA2V08
		230	7½	240	SCW22V03	SCT2V03	SCT42V03	SCR2V03	SCA2V03
		460	10	480	SCW22V06	SCT2V06	SCT42V06	SCR2V06	SCA2V06
		575	10	600	SCW22V07	SCT2V07	SCT42V07	SCR2V07	SCA2V07
2	45	Separate Control†		120	SDW22V02S	SDT2V02S	SDT42V02S	SDR2V02S	SDA2V02S
		200	10	208	SDW22V08	SDT2V08	SDT42V08	SDR2V08	SDA2V08
		230	15	240	SDW22V03	SDT2V03	SDT42V03	SDR2V03	SDA2V03
		460	25	480	SDW22V06	SDT2V06	SDT42V06	SDR2V06	SDA2V06
		575	25	600	SDW22V07	SDT2V07	SDT42V07	SDR2V07	SDA2V07
3	90	Separate Control†		120	SEW22V02S	. . .	SET42V02S	SER2V02S	SEA2V02S
		200	25	208	SEW22V08		SET42V08	SER2V08	SEA2V08
		230	30	240	SEW22V03		SET42V03	SER2V03	SEA2V03
		460	50	480	SEW22V06		SET42V06	SER2V06	SEA2V06
		575	50	600	SEW22V07		SET42V07	SER2V07	SEA2V07
4	135	Separate Control†		120	SFW22V02S	. . .	SFT42V02S	SFR2V02S	SFA2V02S
		200	40	208	SFW22V08		SFT42V08	SFR2V08	SFA2V08
		230	50	240	SFW22V03		SFT42V03	SFR2V03	SFA2V03
		460	100	480	SFW22V06		SFT42V06	SFR2V06	SFA2V06
		575	100	600	SFW22V07		SFT42V07	SFR2V07	SFA2V07
5	270	Separate Control†		120	. . .	. . .	. . .	SGR2V02S	SGA2V02S
		200	75	208				SGR2V08	SGA2V08
		230	100	240				SGR2V03	SGA2V03
		460	200	480				SGR2V06	SGA2V06
		575	200	600				SGR2V07	SGA2V07
6	540	Separate Control†		120	. . .	. . .	. . .	. . .	SHA2V02S
		200	150	208					SHA2V08
		230	200	240					SHA2V03
		460	400	480					SHA2V06
		575	400	600					SHA2V07
7	810	Separate Control†			. . .	. . .	. . .	. . .	SJA2V02S
		200	—	208					SJA2V08
		230	300	240					SJA2V03
		460	600	480					SJA2V06
		575	600	600					SJA2V07

† 120 Volt Polyphase contactors are wired for separate control.

■ Limited to one Pilot Light and a Selector Switch or Start-Stop Push Button.

* Coil voltage code must be specified to order this product. Refer to standard coil voltage codes listed in selection table above or additional standard voltage codes below and insert as shown in the HOW TO ORDER block.

Coil Voltage Codes

Voltage		Code
60 Hz	50 Hz	
24▲	. . .	VO1
120	110	VO2
208	. . .	VO8
240	220	VO3
480	440	VO6
600	550	VO7
Specify	Specify	V99

▲ 24 V coils are not available on Sizes 4-7. On Sizes 00-3, where 24 V coils are available, Form S (separate control) must be specified.

Explosion Proof Units

File E78503
CCN NPKR

File LR60905
Class 3218-03

How to Order:

To Order Specify:	Catalog Number			
	Class	Type	Coil Voltage Code	Form(s)
• Class Number • Type Number • Coil Voltage Code • Form(s)	8502	SBA2	VO2	P1S

Factory Modifications (FORMS)..... Refer to Catalog 9999CT9701
Application Data.....Pages 13-16
Dimensions.....Pages 17-20
Separate Enclosures (Class 9991)..... Refer to Catalog 9999CT9701
Replacement Parts (Class 9998)..... Refer to Catalog 9999CT9701
Type S Accessories (Class 9999) ..... Refer to Catalog 9999CT9701

© 1998 Square D All Rights Reserved

Full Voltage Contactors — NEMA
Selection – Class 8502

600 Volts AC Maximum — 50-60 Hertz

NEMA Size	Continuous Current Ratings	Motor Volts	Max. HP	∗ Coil Voltage	Open Type	NEMA Type 1 General Purpose Enclosure	NEMA Type 4 & 4X Watertight, Dusttight Brushed Stainless Steel Enclosure (Size 0-5)♦
					Type	Type	Type
1-Pole Single Phase							
0	18	115 230	1 2	120 240	SBO5V02 SBO5V03	SBG5V02 SBG5V03	SBW15V02 SBW15V03
1	27	115 230	2 3	120 240	SCO5V02 SCO5V03	SCG5V02 SCG5V03	SCW15V02 SCW15V03
2-Pole Single Phase							
00	9	115 230	⅓ 1	120 240	SAO11V02 SAO11V03	SAG11V02 SAG11V03	Use Size 0
0	18	115 230	1 2	120 240	SBO1V02 SBO1V03	SBG1V02 SBG1V03	SBW11V02 SBW11V03
1	27	115 230	2 3	120 240	SCO1V02 SCO1V03	SCG1V02 SCG1V03	SCW11V02 SCW11V03
2	45	115 230	3 7½	120 240	SDO1V02 SDO1V03	SDG1V02 SDG1V03	SDW11V02 SDW11V03
3	90	. . .	. . .	120 240	SEO1V02 SEO1V03	SEG1V02 SEG1V03	SEW11V02 SEW11V03
4	135	. . .	. . .	120 240	SFO1V02 SFO1V03	SFG1V02 SFG1V03	SFW11V02 SFW11V03
5	270	. . .	. . .	120 240	SGO1V02 SGO1V03	SGG1V02 SGG1V03	SGW11V02 SGW11V03
6	540	. . .	. . .	120 240	SHO1V02 SHO1V03	SHG1V02 SHG1V03	SHW1V02 SHW1V03
7	810	. . .	. . .	120 240	SJO1V02 SJO1V03	SJG1V02 SJG1V03	SJW1V02 SJW1V03
4-Pole Polyphase							
0	18	Separate Control† 200 230 460 575	 3 3 5 5	120 208 240 480 600	SBO3V02S SBO3V08 SBO3V03 SBO3V06 SBO3V07	SBG3V02S SBG3V08 SBG3V03 SBG3V06 SBG3V07	SBW13V02S SBW13V08 SBW13V03 SBW13V06 SBW13V07
1	27	Separate Control† 200 230 460 575	 7½ 7½ 10 10	120 208 240 480 600	SCO3V02S SCO3V08 SCO3V03 SCO3V06 SCO3V07	SCG3V02S SCG3V08 SCG3V03 SCG3V06 SCG3V07	SCW13V02S SCW13V08 SCW13V03 SCW13V06 SCW13V07
2	45	Separate Control† 200 230 460 575	 10 15 25 25	120 208 240 480 600	SDO3V02S SDO3V08 SDO3V03 SDO3V06 SDO3V07	SDG3V02S SDG3V08 SDG3V03 SDG3V06 SDG3V07	SDW13V02S SDW13V08 SDW13V03 SDW13V06 SDW13V07
3	90	Separate Control† 200 230 460 575	 25 30 50 50	120 208 240 480 600	SEO3V02S SEO3V08 SEO3V03 SEO3V06 SEO3V07	SEG3V02S SEG3V08 SEG3V03 SEG3V06 SEG3V07	SEW13V02S SEW13V08 SEW13V03 SEW13V06 SEW13V07
4	135	Separate Control† 200 230 460 575	 40 50 100 100	120 208 240 480 600	SFO3V02S SFO3V08 SFO3V03 SFO3V06 SFO3V07	SFG3V02S SFG3V08 SFG3V03 SFG3V06 SFG3V07	SFW13V02S SFW13V08 SFW13V03 SFW13V06 SFW13V07
5-Pole Polyphase							
0	18	Separate Control† 200 230 460 575	 3 3 5 5	120 208 240 480 600	SBO4V02S SBO4V08 SBO4V03 SBO4V06 SBO4V07	SBG4V02S SBG4V08 SBG4V03 SBG4V06 SBG4V07	SBW14V02S SBW14V08 SBW14V03 SBW14V06 SBW14V07
1	27	Separate Control† 200 230 460 575	 7½ 7½ 10 10	120 208 240 480 600	SCO4V02S SCO4V08 SCO4V03 SCO4V06 SCO4V07	SCG4V02S SCG4V08 SCG4V03 SCG4V06 SCG4V07	SCW14V02S SCW14V08 SCW14V03 SCW14V06 SCW14V07
2	45	Separate Control† 200 230 460 575	 10 15 25 25	120 208 240 480 600	SDO4V02S SDO4V08 SDO4V03 SDO4V06 SDO4V07	SDG4V02S SDG4V08 SDG4V03 SDG4V06 SDG4V07	SDW14V02S SDW14V08 SDW14V03 SDW14V06 SDW14V07
3	90	Separate Control† 200 230 460 575	 25 30 50 50	120 208 240 480 600	SEO4V02S SEO4V08 SEO4V03 SEO4V06 SEO4V07	SEG4V02S SEG4V08 SEG4V03 SEG4V06 SEG4V07	SEW14V02S SEW14V08 SEW14V03 SEW14V06 SEW14V07
4	135	Separate Control† 200 230 460 575	 40 50 100 100	120 208 240 480 600	SFO4V02S SFO4V08 SFO4V03 SFO4V06 SFO4V07	SFG4V02S SFG4V08 SFG4V03 SFG4V06 SFG4V07	SFW14V02S SFW14V08 SFW14V03 SFW14V06 SFW14V07

♦ Size 6 and 7 are painted sheet steel rated NEMA Type 4 only.

† 120 Volt Polyphase contactors are wired for separate control.

∗ Coil voltage code must be specified to order this product. Refer to standard voltage codes listed in selection table above or additional standard voltage codes and insert as shown in the HOW TO ORDER block on Page 5.

© 1998 Square D All Rights Reserved

600 Volts AC Maximum — 50-60 Hertz

NEMA Size	Continuous Current Ratings	Motor Volts	Max. HP	* Coil Voltage	NEMA Type 4X Watertight, Dusttight, Corrosion-Resistant Glass-Polyester Enclosure	NEMA Type 7 & 9 Hazardous Locations Class I, Groups C & D Class II, Groups E, F, & G			NEMA Type 12 Dusttight & Driptight Industrial Use Enclosure
					Type	Bolted Type		SPIN TOP® Type	Type
						Cast Iron■	Cast Aluminum		
1-Pole Single Phase									
0	18	115 230	1 2	120 240	. . .	SBT5V02 SBT5V03	SBT45V02 SBT45V03	SBR5V02 SBR5V03	SBA5V02 SBA5V03
1	27	115 230	2 3	120 240	. . .	SCT5V02 SCT5V03	SCT5V02 SCT5V03	SCR5V02 SCR5V03	SCA5V02 SCA5V03
2-Pole Single Phase									
00	9	115 230	1/3 1	120 240	Use Size 0	Use Size 0		Use Size 0	Use Size 0
0	18	115 230	1 2	120 240	SBW21V02 SBW21V03	SBT1V02 SBT1V03	SBT41V02 SBT41V03	SBR1V02 SBR1V03	SBA1V02 SBA1V03
1	27	115 230	2 3	120 240	SCW21V02 SCW21V03	SCT1V02 SCT1V03	SCT41V02 SCT41V03	SCR1V02 SCR1V03	SCA1V02 SCA1V03
2	45	115 230	3 7½	120 240	SDW21V02 SDW21V03	SDT1V02 SDT1V03	SDT41V02 SDT41V03	SDR1V02 SDR1V03	SDA1V02 SDA1V03
3	90	. . .	. . .	120 240	Consult Local Square D Field Office	. . .	SET41V02 SET41V03	SER1V02 SER1V03	SEA1V02 SEA1V03
4	135	. . .	. . .	120 240	Consult Local Square D Field Office	. . .	SFT41V02 SFT41V03	SFR1V02 SFR1V03	SFA1V02 SFA1V03
5	270	. . .	. . .	120 240	. . .	. . .	. . .	SGR1V02 SGR1V03	SGA1V02 SGA1V03
6	540	. . .	. . .	120 240	. . .	. . .	. . .	. . .	SHA1V02 SHA1V03
7	810	. . .	. . .	120 240	. . .	. . .	. . .	. . .	SJA1V02 SJA1V03
4-Pole Polyphase									
0	18	Separate Control† 200 230 460 575	 3 3 5 5	120 208 240 480 600	SBW33V02S SBW33V08 SBW33V03 SBW33V06 SBW33V07	SBT3V02S SBT3V08 SBT3V03 SBT3V06 SBT3V07	Consult Local Square D Field Office	SBR3V02S SBR3V08 SBR3V03 SBR3V06 SBR3V07	SBA3V02S SBA3V08 SBA3V03 SBA3V06 SBA3V07
1	27	Separate Control† 200 230 460 575	 7½ 7½ 10 19	120 208 240 480 600	SCW23V02S SCW23V08 SCW23V03 SCW23V06 SCW23V07	SCT3V02S SCT3V08 SCT3V03 SCT3V06 SCT3V07	Consult Local Square D Field Office	SCR3V02S SCR3V08 SCR3V03 SCR3V06 SCR3V07	SCA3V02S SCA3V08 SCA3V03 SCA3V06 SCA3V07
2	45	Separate Control† 200 230 460 575	 10 15 25 25	120 208 240 480 600	SDW23V02S SDW23V08 SDW23V03 SDW23V06 SDW23V07	SDT3V02S SDT3V08 SDT3V03 SDT3V06 SDT3V07	Consult Local Square D Field Office	SDR3V02S SDR3V08 SDR3V03 SDR3V06 SDR3V07	SDA3V02S SDA3V08 SDA3V03 SDA3V06 SDA3V07
3	90	Separate Control† 200 230 460 575	 25 30 50 50	120 208 240 480 600	Consult Local Square D Field Office	Consult Local Square D Field Office	Consult Local Square D Field Office	SER3V02S SER3V08 SER3V03 SER3V06 SER3V07	SEA3V02S SEA3V08 SEA3V03 SEA3V06 SEA3V07
4	135	Separate Control† 200 230 460 575	 40 50 100 100	120 208 240 480 600	Consult Local Square D Field Office	Consult Local Square D Field Office	Consult Local Square D Field Office	SFR3V02S SFR3V08 SFR3V03 SFR3V06 SFR3V07	SFA3V02S SFA3V08 SFA3V03 SFA3V06 SFA3V07
5-Pole Polyphase									
0	18	Separate Control† 200 230 460 575	 3 3 5 5	120 208 240 480 600	Consult Local Square D Field Office	. . .	. . .	. . .	SBA4V02S SBA4V08 SBA4V03 SBA4V06 SBA4V07
1	27	Separate Control† 200 230 460 575	 7½ 7½ 10 10	120 208 240 480 600	Consult Local Square D Field Office	. . .	. . .	. . .	SCA4V02S SCA4V08 SCA4V03 SCA4V06 SCA4V07
2	45	Separate Control† 200 230 460 575	 10 15 25 25	120 208 240 480 600	Consult Local Square D Field Office	. . .	. . .	. . .	SDA4V02S SDA4V08 SDA4V03 SDA4V06 SDA4V07
3	90	Separate Control† 200 230 460 575	 25 30 50 50	120 208 240 480 600	Consult Local Square D Field Office	. . .	. . .	. . .	SEA4V02S SEA4V08 SEA4V03 SEA4V06 SEA4V07
4	135	Separate Control† 200 230 460 575	 40 50 100 100	120 208 240 480 600	Consult Local Square D Field Office	. . .	. . .	. . .	SFA4V02S SFA4V08 SFA4V03 SFA4V06 SFA4V07

† 120 Volt Polyphase contactors are wired for separate control.

■ Limited to one Pilot Light and a Selector Switch or Start-Stop Push Button.

* Coil voltage code must be specified to order this product. Refer to standard coil voltage codes listed in selection table above or additional standard voltage codes and insert as shown in the HOW TO ORDER block on Page 5.

© 1998 Square D All Rights Reserved

3-Pole Polyphase—600 Volt AC Max. 50/60 Hz—Three Thermal Units Required

NEMA Size	Continuous Current Ratings	Motor Volts	Max. HP	∗ Coil Voltage	Open Type	NEMA Type 1 General Purpose Enclosure	NEMA Type 4 & 4X Watertight, Dusttight Brushed Stainless Steel Enclosure (Size 0-5)♦	NEMA Type 4X Watertight, Dusttight, Corrosion-Resistant Glass-Polyester Enclosure
					Type	Type	Type	Type
00	9	Separate Control†		120	SAO12V02S	SAG12V02S	Use Size 0	Use Size 0
		200	1½	208	SAO12V08	SAG12V08		
		230	1½	240	SAO12V03	SAG12V03		
		460	2	480	SAO12V06	SAG12V06		
		575	2	600	SAO12V07	SAG12V07		
0	18	Separate Control†		120	SBO2V02S	SBG2V02S	SBW12V02S	SBW22V02S
		200	3	208	SBO2V08	SBG2V08	SBW12V08	SBW22V08
		230	3	240	SBO2V03	SBG2V03	SBW12V03	SBW22V03
		460	5	480	SBO2V06	SBG2V06	SBW12V06	SBW22V06
		575	5	600	SBO2V07	SBG2V07	SBW12V07	SBW22V07
1	27	Separate Control†		120	SCO3V02S	SCG3V02S	SCW13V02S	SCW23V02S
		200	7½	208	SCO3V08	SCG3V08	SCW13V08	SCW23V08
		230	7½	240	SCO3V03	SCG3V03	SCW13V03	SCW23V03
		460	10	480	SCO3V06	SCG3V06	SCW13V06	SCW23V06
		575	10	600	SCO3V07	SCG3V07	SCW13V07	SCW23V07
2	45	Separate Control†		120	SDO1V02S	SDG1V02S	SDW11V02S	SDW21V02S
		200	10	208	SDO1V08	SDG1V08	SDW11V08	SDW21V08
		230	15	240	SDO1V03	SDG1V03	SDW11V03	SDW21V03
		460	25	480	SDO1V06	SDG1V06	SDW11V06	SDW21V06
		575	25	600	SDO1V07	SDG1V07	SDW11V07	SDW21V07
3	90	Separate Control†		120	SEO1V02S	SEG1V02S	SEW11V02S	SEW21V02S
		200	25	208	SEO1V08	SEG1V08	SEW11V08	SEW21V08
		230	30	240	SEO1V03	SEG1V03	SEW11V03	SEW21V03
		460	50	480	SEO1V06	SEG1V06	SEW11V06	SEW21V06
		575	50	600	SEO1V07	SEG1V07	SEW11V07	SEW21V07
4	135	Separate Control†		120	SFO1V02S	SFG1V02S	SFW11V02S	SFW21V02S
		200	40	208	SFO1V08	SFG1V08	SFW11V08	SFW21V08
		230	50	240	SFO1V03	SFG1V03	SFW11V03	SFW21V03
		460	100	480	SFO1V06	SFG1V06	SFW11V06	SFW21V06
		575	100	600	SFO1V07	SFG1V07	SFW11V07	SFW21V07
5	270	Separate Control†		120	SGO1V02S	SGG1V02S	SGW11V02S	. . .
		200	75	208	SGO1V08	SGG1V08	SGW11V08	
		230	100	240	SGO1V03	SGG1V03	SGW11V03	
		460	200	480	SGO1V06	SGG1V06	SGW11V06	
		575	200	600	SGO1V07	SGG1V07	SGW11V07	
6	540	Separate Control†		120	SHO2V02S	SHG2V02S	SHW2V02S	. . .
		200	150	208	SHO2V08	SHG2V08	SHW2V08	
		230	200	240	SHO2V03	SHG2V03	SHW2V03	
		460	400	480	SHO2V06	SHG2V06	SHW2V06	
		575	400	600	SHO2V07	SHG2V07	SHW2V07	
7	810	Separate Control†		120	SJO2V02S	SJG2V02S	SJW2V02S	. . .
		200	—	208	SJO2V08	SJG2V08	SJW2V08	
		230	300	240	SJO2V03	SJG2V03	SJW2V03	
		460	600	480	SJO2V06	SJG2V06	SJW2V06	
		575	600	600	SJO2V07	SJG2V07	SJW2V07	

♦ Size 6 and 7 are rated NEMA Type 4 only.
† 120 Volt Polyphase starters are wired for separate control.
∗ Coil voltage code must be specified to order this product. Refer to standard coil voltage codes listed in selection table above or additional standard voltage codes below and insert as shown in the HOW TO ORDER block.

Coil Voltage Codes

Voltage		Code
60 Hz	50 Hz	
24▲	. . .	VO1
120	110	VO2
208	. . .	VO8
240	220	VO3
480	440	VO6
600	550	VO7
Specify	Specify	V99

▲ 24 V coils are not available on Sizes 4-7. On Sizes 00-3, where 24 V coils are available, Form S (separate control) must be specified.

File E78351
CCN NLDX

File LR60905
Class 3211-04

IEC 947-4-1
Sizes 00-5 only

How to Order:

To Order Specify:	Catalog Number			
• Class Number • Type Number • Coil Voltage Code • Form(s)	Class	Type	Coil Voltage Code	Form(s)
	8536	SBA2	VO2	P1S

Factory Modifications (FORMS) .....Refer to Catalog 9999CT9701
Application Data ..... Pages 13-16
Dimensions ..... Pages 17-20
Separate Enclosures (Class 9991) .....Refer to Catalog 9999CT9701
Replacement Parts (Class 9998) .....Refer to Catalog 9999CT9701
Type S Accessories (Class 9999) .....Refer to Catalog 9999CT9701

© 1998 Square D All Rights Reserved

3-Pole Polyphase — 600 Volts AC Maximum — 50-60 Hertz—Three Thermal Units Required

NEMA Size	Continuous Current Ratings	Motor Volts	Max. HP	∗ Coil Voltage	NEMA Type 7 & 9 Hazardous Locations Class I, Groups C & D Class II, Class E, F, & G			NEMA Type 9 Hazardous Locations Class II, Groups E, F, & G	NEMA Type 12/3R● Dusttight & Driptight Industrial Use Enclosure
					Bolted Type		SPIN TOP® Type	Type	Type
					Cast Iron■	Cast Aluminum			
00	9	Separate Control† 200 230 460 575	 1½ 1½ 2 2	120 208 240 480 600	USE Size 0		USE Size 0	USE Size 0	Use Size 0
0	18	Separate Control† 200 230 460 575	 3 3 5 5	120 208 240 480 600	SBT2V02S SBT2V08 SBT2V03 SBT2V06 SBT2V07	SBT42V02S SBT42V08 SBT42V03 SBT42V06 SBT42V07	SBR2V02S SBR2V08 SBR2V03 SBR2V06 SBR2V07	SBE2V02S SBE2V08 SBE2V03 SBE2V06 SBE2V07	SBA2V02S SBA2V08 SBA2V03 SBA2V06 SBA2V07
1	27	Separate Control† 200 230 460 575	 7½ 7½ 10 10	120 208 240 480 600	SCT3V02S SCT3V08 SCT3V03 SCT3V06 SCT3V07	SCT43V02S SCT43V08 SCT43V03 SCT43V06 SCT43V07	SCR3V02S SCR3V08 SCR3V03 SCR3V06 SCR3V07	SCE3V02S SCE3V08 SCE3V03 SCE3V06 SCE3V07	SCA3V02S SCA3V08 SCA3V03 SCA3V06 SCA3V07
2	45	Separate Control† 200 230 460 575	 10 15 25 25	120 208 240 480 600	SDT1V02S SDT1V08 SDT1V03 SDT1V06 SDT1V07	SDT41V02S SDT41V08 SDT41V03 SDT41V06 SDT41V07	SDR1V02S SDR1V08 SDR1V03 SDR1V06 SDR1V07	SDE1V02S SDE1V08 SDE1V03 SDE1V06 SDE1V07	SDA1V02S SDA1V08 SDA1V03 SDA1V06 SDA1V07
3	90	Separate Control† 200 230 460 575	 25 30 50 50	120 208 240 480 600	. . .	SET43V02S SET43V08 SET43V03 SET43V06 SET43V07	SER3V02S SER3V08 SER3V03 SER3V06 SER3V07	SEE1V02S SEE1V08 SEE1V03 SEE1V06 SEE1V07	SEA1V02S SEA1V08 SEA1V03 SEA1V06 SEA1V07
4	135	Separate Control† 200 230 460 575	 40 50 100 100	120 208 240 480 600	. . .	SFT41V02S SFT41V08 SFT41V03 SFT41V06 SFT41V07	SFR1V02S SFR1V08 SFR1V03 SFR1V06 SFR1V07	SFE1V02S SFE1V08 SFE1V03 SFE1V06 SFE1V07	SFA1V02S SFA1V08 SFA1V03 SFA1V06 SFA1V07
5	270	Separate Control† 200 230 460 575	 75 100 200 200	120 208 240 480 600	. . .	SGT41V02S SGT41V08 SGT41V03 SGT41V06 SGT41V07	SGR1V02S SGR1V08 SGR1V03 SGR1V06 SGR1V07	SGE1V02S SGE1V08 SGE1V03 SGE1V06 SGE1V07	SGA1V02S SGA1V08 SGA1V03 SGA1V06 SGA1V07
6	540	Separate Control† 200 230 460 575	 150 200 400 400	120 208 240 480 600	. . .	. . .	. . .	. . .	SHA2V02S SHA2V08 SHA2V03 SHA2V06 SHA2V07
7	810	Separate Control† 200 230 460 575	 — 300 600 600	120 208 240 480 600	. . .	. . .	. . .	. . .	SJA2V02S SJA2V08 SJA2V03 SJA2V06 SJA2V07

● For NEMA Type 3R enclosed devices (Sizes 0-4 only), change "A" in Type designation to "H", no additional charge. Consult Factory for restrictions on available Forms in NEMA Type 3R enclosures.

† 120 Volt Polyphase starters are wired for separate control.

■ Limited to one Pilot Light and a Selector Switch or Start-Stop Push Button.

∗ Coil voltage code must be specified to order this product. Refer to standard coil voltage codes listed in selection table above or additional standard voltage codes in table below and insert as shown in the HOW TO ORDER block.

Coil Voltage Codes

Voltage		Code
60 Hz	50 Hz	
24▲	. . .	VO1
120	110	VO2
208	. . .	VO8
240	220	VO3
480	440	VO6
600	550	VO7
Specify	Specify	V99

▲ 24 V coils are not available on Sizes 4-7. On Sizes 00-3, where 24 V coils are available, Form S (separate control) must be specified.

Factory Modifications (FORMS)..... Refer to Catalog 9999CT9701
Application Data.....Pages 13-16
Dimensions.....Pages 17-20
Separate Enclosures (Class 9991)..... Refer to Catalog 9999CT9701
Replacement Parts (Class 9998)..... Refer to Catalog 9999CT9701
Type S Accessories (Class 9999) ..... Refer to Catalog 9999CT9701

How to Order:

To Order Specify:	*Catalog Number*			
• Class Number • Type Number • Coil Voltage Code • Form(s)	Class	Type	Coil Voltage Code	Form(s)
	8536	SBA2	VO2	H3O

© 1998 Square D All Rights Reserved

2-Pole Single Phase — 600 Volts AC Maximum — 50-60 Hertz Thermal Units — One Thermal Unit Required

NEMA Size	Continuous Current Ratings	Motor Volts	Max. HP	* Coil Voltage	Open Type	NEMA Type 1 General Purpose Enclosure	NEMA Type 4 & 4X Watertight, Dusttight Brushed Stainless Steel Enclosure	NEMA Type 4X Watertight, Dusttight, Corrosion-Resistant Glass-Polyester Enclosure
					Type	Type	Type	Type
00	9	115 230	⅓ 1	120 240	SAO11V02 SAO11V03	SAG11V02 SAG11V03	Use Size 0	Use Size 0
0	18	115 230	1 2	120 240	SBO1V02 SBO1V03	SBG1V02 SBG1V03	SBW11V02 SBW11V03	SBW21V02 SBW21V03
1	27	115 230	2 3	120 240	SCO1V02 SCO1V03	SCG1V02 SCG1V03	SCW11V02 SCW11V03	SCW21V02 SCW21V03
1P	36	115 230	3 5	120 240	SCO2V02 SCO2V03	SCG2V02 SCG2V03	SCW12V02 SCW12V03	SCW22V02 SCW22V03
2	45	115 230	3 7½	120 240	SDO6V02 SDO6V03	SDG6V02 SDG6V03	SDW16V02 SDW16V03	SDW26V02 SDW26V03

4-Pole, 2-Phase — 600 Volts AC Maximum — 50-60 Hertz — Two Thermal Units Required

NEMA Size	Continuous Current Ratings	Motor Volts	Max. HP	* Coil Voltage	Open Type	NEMA Type 1 General Purpose Enclosure	NEMA Type 4 & 4X Watertight, Dusttight Brushed Stainless Steel Enclosure	NEMA Type 4X Watertight, Dusttight, Corrosion-Resistant Glass-Polyester Enclosure
					Type	Type	Type	Type
0	18	Separate Control†		120	SBO3V02S	SBG3V02S	SBW13V02S	SBW23V02S
		200	3	208	SBO3V08	SBG3V08	SBW13V08	SBW23V08
		230	3	240	SBO3V03	SBG3V03	SBW13V03	SBW23V03
		460	10	480	SBO3V06	SBG3V06	SBW13V06	SBW23V06
		575	10	600	SBO3V07	SBG3V07	SBW13V07	SBW23V07
1	27	Separate Control†		120	SCO4V02S	SCG4V02S	SCW14V02S	SCW24V02S
		200	7½	208	SCO4V08	SCG4V08	SCW14V08	SCW24V08
		230	7½	240	SCO4V03	SCG4V03	SCW14V03	SCW24V03
		460	10	480	SCO4V06	SCG4V06	SCW14V06	SCW24V06
		575	10	600	SCO4V07	SCG4V07	SCW14V07	SCW24V07
2	45	Separate Control†		120	SDO2V02S	SDG2V02S	SDW12V02S	SDW22V02S
		200	10	208	SDO2V08	SDG2V08	SDW12V08	SDW22V08
		230	15	240	SDO2V03	SDG2V03	SDW12V03	SDW22V03
		460	25	480	SDO2V06	SDG2V06	SDW12V06	SDW22V06
		575	25	600	SDO2V07	SDG2V07	SDW12V07	SDW22V07
3	90	Separate Control†		120	SEO2V02S	SEG2V02S	SEW12V02S	Consult Local Square D Field Office
		200	15	208	SEO2V08	SEG2V08	SEW12V08	
		230	30	240	SEO2V03	SEG2V03	SEW12V03	
		460	50	480	SEO2V06	SEG2V06	SEW12V06	
		575	50	600	SEO2V07	SEG2V07	SEW12V07	
4	135	Separate Control†		120	SFO2V02S	SFG2V02S	SFW12V02S	
		200	40	208	SFO2V08	SFG2V08	SFW12V08	
		230	50	240	SFO2V03	SFG2V03	SFW12V03	
		460	100	480	SFO2V06	SFG2V06	SFW12V06	
		575	100	600	SFO2V07	SFG2V07	SFW12V07	

† 120 Volt Polyphase starters are wired for separate control.

* Coil voltage code must be specified to order this product. Refer to standard coil voltage codes listed in selection table above or additional standard voltage codes below and insert as shown in the HOW TO ORDER block.

Coil Voltage Codes

Voltage		Code
60 Hz	50 Hz	
24▲	. . .	VO1
120	110	VO2
208	. . .	VO8
240	220	VO3
480	440	VO6
600	550	VO7
Specify	Specify	V99

▲ 24 V coils are not available on Sizes 4-7. On Sizes 00-3, where 24 V coils are available, Form S (separate control) must be specified.

File E78351
CCN NLDX

File LR60905
Class 3211-04

IEC 947-4-1

How to Order:

To Order Specify:	Catalog Number			
• Class Number • Type Number • Coil Voltage Code • Form(s)	Class	Type	Coil Voltage Code	Form(s)
	8536	SCG1	VO2	P1

Factory Modifications (FORMS) .....Refer to Catalog 9999CT9701
Application Data ..... Pages 13-16
Dimensions ..... Pages 17-20
Separate Enclosures (Class 9991) .....Refer to Catalog 9999CT9701
Replacement Parts (Class 9998) .....Refer to Catalog 9999CT9701
Type S Accessories (Class 9999) .....Refer to Catalog 9999CT9701

© 1998 Square D All Rights Reserved

2-Pole Single Phase — 600 Volts AC Maximum — 50-60 Hertz — One Thermal Unit Required

Devices require 1 thermal unit

NEMA Size	Continuous Current Ratings	Motor Volts	Max. HP	∗ Coil Voltage	NEMA Type 7 & 9 Hazardous Locations Class I, Groups C & D Class II, Groups E, F, & G			NEMA Type 9 Hazardous Locations Class II, Groups E, F, & G	NEMA Type 12/3R♦ Dusttight & Driptight Industrial Use Enclosure
					Bolted Type		SPIN TOP® Type	Type	Type
					Cast Iron■	Cast Aluminum			
00	9	115 230	⅓ 1	120 240	USE Size 0		USE Size 0	USE Size 0	Use Size 0
0	18	115 230	1 2	120 240	SBT1V02 SBT1V03	SBT1V02 SBT1V03	SBR1V02 SBR1V03	SBE1V02 SBE1V03	SBA1V02 SBA1V03
1	27	115 230	2 3	120 240	SCT1V02 SCT1V03	SCT1V02 SCT1V03	SCR1V02 SCR1V03	SCE1V02 SCE1V03	SCA1V02 SCA1V03
1P	36	115 230	3 5	120 240	SCT2V02 SCT2V03	SCT2V02 SCT2V03	SCR2V02 SCR2V03	SCE2V02 SCE2V03	SCA2V02 SCA2V03
2	45	115 230	3 7½	120 240	SDT6V02 SDT6V03	SDT6V02 SDT6V03	SDR6V02 SDR6V03	SDE6V02 SDE6V03	SDA6V02 SDA6V03

4-Pole 2-Phase — 600 Volts AC Maximum — 50-60 Hertz —Two Thermal Units Required

NEMA Size	Continuous Current Ratings	Motor Volts	Max. HP	∗ Coil Voltage	NEMA Type 7 & 9 Hazardous Locations Class I, Groups C & D Class II, Groups E, F, & G			NEMA Type 9 Hazardous Locations Class II, Groups E, F, & G	NEMA Type 12 Dusttight & Driptight Industrial Use Enclosure
					Bolted Type		SPIN TOP® Type	Type	Type
					Cast Iron■	Cast Aluminum			
0	18	Separate Control† 200 230 460 575	 3 3 5 5	120 208 240 480 600	SBT3V02S SBT3V08 SBT3V03 SBT3V06 SBT3V07	Consult Local Square D Field Office	SBR3V02S SBR3V08 SBR3V03 SBR3V06 SBR3V07	. . .	SBA3V02S SBA3V08 SBA3V03 SBA3V06 SBA3V07
1	27	Separate Control† 200 230 460 575	 7½ 7½ 10 10	120 208 240 480 600	SCT4V02S SCT4V08 SCT4V03 SCT4V06 SCT4V07	Consult Local Square D Field Office	SCR4V02S SCR4V08 SCR4V03 SCR4V06 SCR4V07	. . .	SCA4V02S SCA4V08 SCA4V03 SCA4V06 SCA4V07
2	45	Separate Control† 200 230 460 575	 10 15 25 25	120 208 240 480 600	SDT2V02S SDT2V08 SDT2V03 SDT2V06 SDT2V07	Consult Local Square D Field Office	SDR2V02S SDR2V08 SDR2V03 SDR2V06 SDR2V07	. . .	SDA2V02S SDA2V08 SDA2V03 SDA2V06 SDA2V07
3	90	Separate Control† 200 230 460 575	 25 30 50 50	120 208 240 480 600	Consult Local Square D Field Office	Consult Local Square D Field Office	SER2V02S SER2V08 SER2V03 SER2V06 SER2V07	. . .	SEA2V02S SEA2V08 SEA2V03 SEA2V06 SEA2V07
4	135	Separate Control† 200 230 460 575	 40 50 100 100	120 208 240 480 600	Consult Local Square D Field Office	Consult Local Square D Field Office	. . .	. . .	SFA2V02S SFA2V08 SFA2V03 SFA2V06 SFA2V07

† 120 Volt Polyphase contactors are wired for separate control.
♦ For NEMA Type 3R enclosed devices (2-Pole only), change 'A' in Type designation to 'H', no additional charge.
■ Limited to one Pilot Light and Selector Switch or Start-Stop Push Button.
∗ Coil voltage code must be specified to order this product. Refer to standard coil voltage codes listed in selection table above or additional standard voltage codes below and insert as shown in the HOW TO ORDER block.

Coil Voltage Codes

Voltage		Code
60 Hz	50 Hz	
24▲	. . .	VO1
120	110	VO2
208	. . .	VO8
240	220	VO3
480	440	VO6
600	550	VO7
Specify	Specify	V99

▲ 24 V coils are not available on Sizes 4-7. On Sizes 00-3, where 24 V coils are available, Form S (separate control) must be specified.

Factory Modifications (FORMS)..... Refer to Catalog 9999CT9701
Application Data.....Pages 13-16
Dimensions.....Pages 17-20
Separate Enclosures (Class 9991)..... Refer to Catalog 9999CT9701
Replacement Parts (Class 9998)..... Refer to Catalog 9999CT9701
Type S Accessories (Class 9999) ..... Refer to Catalog 9999CT9701

How to Order:

To Order Specify:	*Catalog Number*			
	Class	Type	Coil Voltage Code	Form(s)
• Class Number • Type Number • Coil Voltage Code • Form(s)	8536	SCA1	VO3	P1

© 1998 Square D All Rights Reserved

Full Voltage Starters
Selection – Class 8536

Types SB-SD with Auxiliary Load Terminals – Class 8536
3-Pole Polyphase — Three Thermal Units Required

It is sometimes desirable to use the capacitors in motor branch circuits to improve power factor. The Size 0-2 Type SB-SD starters listed included three auxiliary terminals to allow easy connection of power factor correction capacitors. When capacitors are connected using these terminals, no adjustment on the selection of thermal units is necessary.

These terminals are also available as a kit Class 9999 Type PFL for Type S NEMA Size 0, 1 and 2 Starters with Motor Logic overload relays. These terminals are available for connection of power factor (PF) correction capacitors. These kits are sold separately and are not factory installed.

NEMA Size	Motor Volts	Maximum HP	Coil Voltage	Open Type
0	Separate Control†		120	SBTO2V02S
	200	3	208	SBTO2V08
	230	3	240	SBTO2V03
	460	5	480	SBTO2V06
	575	5	600	SBTO2V07
1	Separate Control†		120	SBTO3V02S
	200	7½	208	SBTO3V08
	230	7½	240	SBTO3V03
	460	10	480	SBTO3V06
	575	10	600	SBTO3V07
2	Separate Control†		120	SDTO1V02S
	200	10	208	SDTO1V08
	230	15	240	SDTO1V03
	460	25	480	SDTO1V06
	575	25	600	SDTO1V07

† 120 Volt polyphase starters are wired for separate control.

Extra Capacity Single Phase Starters
2-Pole Single Phase — 250 Volts AC Maximum — 50-60 Hertz
Thermal Units — Devices require 1 thermal unit. Standard trip.

Motor Volts	Max. HP	* Coil Voltage	Open Type	NEMA Type 1 General Purpose Enclosure	NEMA Type 3R Rainproof, Sleet Resistant, Outdoor Use Enclosure	NEMA Type 4 & 4X Watertight, Dusttight Brushed Stainless Steel Enclosure (Sizes 0-5)	NEMA Type 4X Watertight Corrosion Resistant Class-Polyester Enclosure	NEMA Type 12 Dusttight & Driptight Industrial Use Enclosure
				Type	Type	Type	Type	Type
115	5	120	SDO8V02	. . .	SDH8V02	. . .	. . .	. . .
230	10	240	SDO8V03		SDH8V03			
115	7½	120	SEO6V02	SEG6V02	SEH6V02	SEW16V02	SEW26V02	SEA6V02
230	15	240	SEO6V03	SEG6V03	SEH6V03	SEW16V03	SEW26V03	SEA6V03

* Coil voltage code must be specified to order this product. Refer to standard coil voltage codes listed in selection tables above or additional standard voltage codes below and insert as shown in the HOW TO ORDER bolck.

Coil Voltage Codes

Voltage		Code
60 Hz	50 Hz	
24	. . .	VO1
120	110	VO2
208	. . .	VO8
240	220	VO3
480	440	VO6
600	550	VO7
Specify	Specify	V99

How to Order:

To Order Specify:	*Catalog Number*			
• Class Number • Type Number • Coil Voltage Code • Form(s)	Class	Type	Coil Voltage Code	Form(s)
	8536	SEG6	VO3	P1

Factory Modifications (FORMS) .....Refer to Catalog 9999CT9701
Application Data ..... Pages 13-16
Dimensions ..... Pages 17-20
Separate Enclosures (Class 9991) .....Refer to Catalog 9999CT9701
Replacement Parts (Class 9998) .....Refer to Catalog 9999CT9701
Type S Accessories (Class 9999) .....Refer to Catalog 9999CT9701

© 1998 Square D All Rights Reserved

NEMA Size	Load Volts	Maximum Horsepower Rating – Nonplugging and Nonjogging Duty		Maximum Horsepower Rating – Plugging and Jogging Duty †		Continuous Current Rating, Amperes – 600 Volt Max.	Service – Limit Current Rating, Amperes ∗	Tungsten and Infrared Lamp Load, Amperes – 250 Volts Max. ★	Resistance Heating Loads, KW – Other Than Infrared Lamp Loads ‡		KVA Rating for Switching Transformer Primaries at 50 or 60 Cycles: Transformers Having Inrush Currents (Worst Case Peak) of Not More Than 20 Times Peak of Continuous Current Rating		KVA Rating for Switching Transformer Primaries at 50 or 60 Cycles: Transformers Having Inrush Currents (Worst Case Peak) of Over 20 Through 40 Times Peak of Continuous Current Rating		3 Phase Rating for Switching Capacitors ●
		Single Phase	Poly-Phase	Single Phase	Poly-Phase				Single Phase	Poly-Phase	Single Phase	Poly-Phase	Single Phase	Poly-Phase	KVAR
00	115	½	. . .	. . .	. . .	9	11	5	. . .	. . .	. . .	. . .	. . .	. . .	. . .
	200	. . .	1½	. . .	. . .	9	11	5	. . .	. . .	. . .	. . .	. . .	. . .	. . .
	230	1	1½	. . .	. . .	9	11	5	. . .	. . .	. . .	. . .	. . .	. . .	. . .
	380	. . .	1½	. . .	. . .	9	11	. . .	. . .	. . .	. . .	. . .	. . .	. . .	. . .
	460	. . .	2	. . .	. . .	9	11	. . .	. . .	. . .	. . .	. . .	. . .	. . .	. . .
	575	. . .	2	. . .	. . .	9	11	. . .	. . .	. . .	. . .	. . .	. . .	. . .	. . .
0	115	1	. . .	½	. . .	18	21	10	. . .	. . .	0.6	. . .	0.3	. . .	. . .
	200	. . .	3	. . .	1½	18	21	10	. . .	. . .	. . .	1.8	. . .	0.9	. . .
	230	2	3	1	1½	18	21	10	. . .	. . .	1.2	2.1	0.6	1.0	. . .
	380	. . .	5	. . .	1½	18	21	. . .	. . .	. . .	. . .	. . .	. . .	. . .	. . .
	460	. . .	5	. . .	2	18	21	. . .	. . .	. . .	2.4	4.2	1.2	2.1	. . .
	575	. . .	5	. . .	2	18	21	. . .	. . .	. . .	3.0	5.2	1.5	2.6	. . .
1	115	2	. . .	1	. . .	27	32	15	3	5	1.2	. . .	0.6	. . .	. . .
	200	. . .	7½	. . .	3	27	32	15	. . .	9.1	. . .	3.6	. . .	1.8	. . .
	230	3	7½	2	3	27	32	15	6	10	2.4	4.3	1.2	2.1	. . .
	380	. . .	10	. . .	5	27	32	. . .	. . .	16.5	. . .	. . .	. . .	. . .	. . .
	460	. . .	10	. . .	5	27	32	. . .	12	20	4.9	8.5	2.5	4.3	. . .
	575	. . .	10	. . .	5	27	32	. . .	15	25	6.2	11.0	3.1	5.3	. . .
1P	115	3	. . .	1½	. . .	36	42	24	. . .	. . .	. . .	. . .	. . .	. . .	. . .
	230	5	. . .	3	. . .	36	42	24	. . .	. . .	. . .	. . .	. . .	. . .	. . .
2	115	3	. . .	2	. . .	45	52	30	5	8.5	2.1	. . .	1.0	. . .	. . .
	200	. . .	10	. . .	7½	45	52	30	. . .	15.4	. . .	6.3	. . .	3.1	. . .
	230	7½	15	5	10	45	52	30	10	17	4.1	7.2	2.1	3.6	8
	380	. . .	25	. . .	15	45	52	. . .	. . .	28	. . .	. . .	. . .	. . .	. . .
	460	. . .	25	. . .	15	45	52	. . .	20	34	8.3	14	4.2	7.2	16
	575	. . .	25	. . .	15	45	52	. . .	25	43	10.0	18	5.2	8.9	20
3	115	. . .	. . .	. . .	. . .	90	104	60	10	17	4.1	. . .	2.0	. . .	. . .
	200	. . .	25	. . .	15	90	104	60	. . .	31	. . .	12	. . .	6.1	. . .
	230	. . .	30	. . .	20	90	104	60	20	34	8.1	14	4.1	7.0	27
	380	. . .	50	. . .	30	90	104	. . .	. . .	56	. . .	. . .	. . .	. . .	. . .
	460	. . .	50	. . .	30	90	104	. . .	40	68	16	28	8.1	14	53
	575	. . .	50	. . .	30	90	104	. . .	50	86	20	35	10	18	67
4	200	. . .	40	. . .	25	135	156	120	. . .	45	. . .	20	. . .	10	. . .
	230	. . .	50	. . .	30	135	156	120	30	52	14	23	6.8	12	40
	380	. . .	75	. . .	50	135	156	. . .	. . .	86.7	. . .	. . .	. . .	. . .	. . .
	460	. . .	100	. . .	60	135	156	. . .	60	105	27	47	14	23	80
	575	. . .	100	. . .	60	135	156	. . .	75	130	34	59	17	29	100
5	200	. . .	75	. . .	60	270	311	240	. . .	91	. . .	41	. . .	20	. . .
	230	. . .	100	. . .	75	270	311	240	60	105	27	47	14	24	80
	380	. . .	150	. . .	125	270	311	. . .	. . .	173	. . .	. . .	. . .	. . .	. . .
	460	. . .	200	. . .	150	270	311	. . .	120	210	54	94	27	47	160
	575	. . .	200	. . .	150	270	311	. . .	150	260	68	117	34	59	200
6♦	200	. . .	150	. . .	125	540	621	480	. . .	182	. . .	81	. . .	41	. . .
	230	. . .	200	. . .	150	540	621	480	120	210	54	94	27	47	160
	380	. . .	300	. . .	250	540	621	. . .	. . .	342	. . .	. . .	. . .	. . .	. . .
	460	. . .	400	. . .	300	540	621	. . .	240	415	108	188	54	94	320
	575	. . .	400	. . .	300	540	621	. . .	300	515	135	234	68	117	400
7♦	230	. . .	300	. . .	. . .	810	932	. . .	180	315	. . .	. . .	. . .	. . .	240
	460	. . .	600	. . .	. . .	810	932	. . .	360	625	. . .	. . .	. . .	. . .	480
	575	. . .	600	. . .	. . .	810	932	. . .	450	775	. . .	. . .	. . .	. . .	600

Tables and footnotes are taken from NEMA Standards.

† Ratings shown are for applications requiring repeated interruptions of stalled motor current or repeated closing of high transient currents encountered in rapid motor reversal, involving more than five openings or closings per minute and more than ten in a ten-minute period, such as plug-stop, plug-reverse or jogging duty. Ratings apply to single speed and multi-speed controllers.

∗ Per NEMA Standards paragraph ICS 2-321.20, the service-limit current represents the maximum ms current, in amperes, which the controller may be expected to carry for protracted periods in normal service. At service-limit current ratings, temperature rises may exceed those obtained by testing the controller at its continuous current rating. The ultimate trip current of over-current (overload) relays or other motor protective devices shall not exceed the service-limit current ratings of the controller.

★ FLUORESCENT LAMP LOADS – 300 VOLTS AND LESS – The characteristics of fluorescent lamps are such that it is not necessary to derate Class 8502 contactors below their normal continuous current rating. Class 8903 contactors may also be used with fluorescent lamp loads. For controlling tungsten and infrared lamp loads, and resistance heating loads, Class 8903 ac lighting contactors are recommended. These contactors are specifically designed for such loads and are applied at their full rating as listed in the Class 8903 Section.

‡ Ratings apply to contactors which are employed to switch the load at the utilization voltage of the heat producing element with a duty which requires continuous operation of not more than five openings per minute. Class 8903 Types L and S lighting contactors are rated for resistance heating loads.

● When discharged, a capacitor has essentially zero impedance. For repetitive switching by contactor, sufficient impedance should be connected in series to limit inrush current to not more than 6 times the contactor rated continuous current. In many installations, the impedance of connecting conductors may be sufficient for this purpose. When switching to connect additional banks, the banks already on the line may be charged and can supply additional available short-circuit current which should be considered when selecting the impedance to limit the current. The ratings for capacitor switching above assume the following maximum available fault currents: NEMA Size 2-3: 5,000 A RMS Sym.; NEMA Size 4-5: 10,000 A RMS Sym.; NEMA Size 6-7: 18,000 A RMS Sym. If available fault current is greater than these values, connect sufficient impedance in series as noted in the previous paragraph.

♦ See Page 16 regarding operation rates for Size 6 & 7.

The motor ratings in the above table are NEMA standard ratings and apply only when the code letter of the motor is the same as or occurs earlier in the alphabet than is shown in the table below. Motors having code letters occurring later in the alphabet may require a larger controller. Consult local Square D field office.

Motor HP Rating	Maximum Allowable Motor Code Letter
1½-2	L
3-5	K
7½ & above	H

© 1998 Square D All Rights Reserved

CLASS 8502 AND 8536 APPLICATION DATA

Power Contact Ratings

All contactors and starters are rated in accordance with NEMA standards. The ratings shown in the price tables are for normal service. For complete data on power contact ratings, refer to Page 13.

Short Circuit Protection

According to the National Electrical Code branch circuit overcurrent protection must be provided for each contactor or starter. For starters refer to instructions furnished with the thermal unit selection table. For contactors (Class 8502 or 8702) provide branch circuit overcurrent protection in accordance with the National Electrical Code, except do not exceed the maximum protective device ratings in table below.

NEMA Size	Maximum Voltage	Class K5, RK5 or RK1 Fuse (Ampere)	Class J or T Fuse (Ampere)	Inverse-Time Circuit Breaker (Ampere)
00	600 250	10 12	15	15
0	600 250	20 25	30	20 35
1	600 250	30 40	60	40 60
2	600 250	60	100	80 90
3	600 250	100 125	200	125 150
4	600	200	400	225
5	600	400	600	400
6	600	600	1200∗	800
7	600	600	1600∗	1200

∗ Class L Fuse only.

Capacitor Switching

The kilovar ratings of enclosed, three phase contactors used as switches for capacitor loads, when only one load appears on the secondary of a distribution system are shown in the table on Page 13.

Coil Burden▲

NEMA Size	No. of Poles	Inrush VA		Sealed VA		Sealed Watts	
		50 Hertz	60 Hertz	50 Hertz	60 Hertz	50 Hertz	60 Hertz
00	2-3	. . .	165	. . .	33	. . .	6
0 & 1	1-5	232	245	26	27	7.7	7.8
2	2 & 3	296	311	36	37	12	14
	4 & 5	429	438	37	38		
3	2-3	676	700	47	46	15	14
	4-5	1260	1185	89	85	23.4	22
4	2-5	. . .	973	. . .	81	. . .	25
5	2-3	2970	2970	250	212	42	39
6★	2-3	1495	1780	56	48	27	32
7★	2-3	. . .	1960	. . .	59	. . .	36

▲ Mean values.
★ Size 6 and 7 have a DC coil. The values shown are for the AC input to the DC power supply that provides power to the coil.

Maintenance of Equipment

Class 9998 Repair Parts Kits are available for all Class 8502 contactors and Class 8536 starters. Service bulletins with a complete list of replaceable parts are supplied with all enclosed devices. Separate bulletins can be ordered and are listed along with the appropriate contact parts kit.

Device				Service Bulletin	Replacement Contacts Class 9998 Type
NEMA Type	Type	Series	No. of Poles		
00	SA	A	2-3	362AS	SL2
		B	2-3	556AS	SJ1
0	SB	A & B	1-3 4 5	277AS 277AS & 250AS 277AS & 250AS	SL2 SL12 (1)SL12 & (1)SL22 or (1)SL2 & (2)SL22
1	SC	A & B	1-3 4 5	278AS 278AS & 250AS 278AS & 250AS	SL3 SL13 (1)SL13 & (1)SL22 or (1)SL3 & (2)SL22
1P	SC	A	2	278AS	SL3
2	SD	A	2-3 4 5	279AS 279AS & 293AS 279AS & 293AS	SL4 SL14 (1)SL14 & (1)SL24 or (1)SL4 & (2)SL24
3	SE	A	2 3 4 5	305AS 305AS 326AS 326AS	SL6 SL7 (2)SL6 (1)SL6 & (1)SL7
4	SF	A	2 3 4 5	306AS 306AS 326AS 326AS	SL8 SL9 (2)SL8 (1)SL8 & (1)SL9
5	SG	A	2 3	328AS 328AS	SL10 SL11
6	SH	A	2 3	342AS 342AS	SL25 SL26
		B	2 3	370AS 370AS	SL25 SL26
7	SJ	A	2 3	397AS	SL30 SL31

Terminals

NEMA Size	Type	Power Terminals		Control Terminals	
		Type of Lug	Wire Sizes∗ Min.-Max.	Type of Lug	Wire Sizes∗ Min.-Max.
00, 0 & 1	SA, SB & SC	Pressure Wire	#14-#8	Pressure Wire	#16-#12
2	SD	Box Lug	#14-#4	Pressure Wire	#16-#12
3	SE	Box Lug	#14-1/0	Pressure Wire	#16-#12
4	SF	Box Lug	#8-250 kcmil	Pressure Wire	#16-#12
5	SG	Box Lug	#4-500 kcmil	Pressure Wire	#16-#12
6	SH	Parallel Groove	One or two 250-500 kcmil per phase	Pressure Wire	#16-#12
7	SJ	Parallel Groove	One to four 250-500 kcmil per phase	Pressure Wire	#16-#12

∗ Solid or stranded copper wire.

© 1998 Square D All Rights Reserved

Auxiliary Units

Auxiliary contacts, power poles, and timer attachments can be added by the factory or in the field on all Type S starters and contactors. The table below shows the maximum number of auxiliary units **(in addition to the holding circuit contact)** that can be added to a given size starter or contactor. In addition, it is possible to add a second internal contact on NEMA Size 0, 1, and 2 contactors and starters.

NEMA Size	Type	No. of Poles of Basic Contactor	Maximum Number of External Auxiliary Units (In addition to holding circuit contact)
00	SA	2-3	4 single circuit auxiliary contacts (N.O. or N.C.) if second internal auxiliary contact is not used.
0, 1 & 2	SB SC SD	1, 2 or 3	4 single circuit auxiliary contacts (N.O. or N.C.)
			3 single circuit auxiliary contacts (N.O. or N.C.) plus 1 attached timer (ON or OFF delay).
			2 single circuit auxiliary contacts (N.O. or N.C.) plus 1 power pole adder (1 or 2 poles, N.O. or N.C.).
			1 attached timer (ON or OFF delay) plus 1 power pole adder (1 or 2 poles, N.O. or N.C.) plus 1 auxiliary contact.
		4 or 5	2 single circuit auxiliary contacts (N.O. or N.C.) 1 timer attachment plus 1 auxiliary contact.
3, 4 & 5	SE SF SG	2-5 (Size 3 & 4)	4 single circuit auxiliary contacts (N.O. or N.C.)
			2 single circuit (Sizes 3 & 4) or 3 single circuit (Size 5) auxiliary contacts plus 1 attached timer (ON or OFF delay).
		2-3 (Size 5)	2 single circuit auxiliary contacts (N.O. or N.C.) plus 1 NEMA Size 0-1 or Size 2 power pole adder (1 or 2 poles, N.O. or N.C.)
6 & 7	SH SJ	2-3	4 single circuit auxiliary contacts (N.O. or N.C.)
			3 single circuit auxiliary contacts (N.O. or N.C.) plus 1 attached timer (ON or OFF delay).
			2 single circuit auxiliary contacts (N.O. or N.C.) plus 1 NEMA Size 0-1 or Size 2 power pole adder (1 or 2 poles, N.O. or N.C.)

Factory Installed Auxiliary Contacts

Additional auxiliary contacts may be factory or field added to any Type S contactor or starter. See table above for maximum number of auxiliary units. The table below lists the Form designations for factory installed electrical contacts.

See Class 9999 for field modification kits.

Form Number of Additional Auxiliary Contacts

When ordering factory installed auxiliary contacts, the Form designations listed should be used.

Number of N.O. Contacts	Number of N.C. Contacts	Form Number
0	1 2 3 4	X01 X02 X03 X04
1	0 1 2 3	X10 X11 X12 X13
2	0 1 2	X20 X21 X22
3 3 4	0 1 0	X30 X31 X40

Control Circuit Transformers

Class 9070 Type T machine tool control transformers are normally used when it is necessary to provide a lower voltage to the control circuit. This transformer with fused protection may be ordered from the factory by specifying Form F4T. The addition of a transformer often requires the use of a larger enclosure. The table below shows the transformer selection for given sized starters and contactors with or without auxiliary units.

NEMA Size	Type	No. of Poles	Auxiliary Units	Transformer Class 9070 Type
0 & 1	SB SC	1-3	With max. of 2 auxiliary contacts	T50
			With timer and maximum of 1 auxiliary contact	
			With 3 or 4 auxiliary contacts with timer and 2 or 3 auxiliary contacts	T100
0 & 1	SB SC	4 & 5	With or without auxiliary contacts or timer	T100
0 & 1 Mechanically Interlocked Devices	SB SC	1-5	With or without attachments	T100
2	SD	2-5	With or without attachments	T100
3	SE	2-3	With or without attachments	GO3†
3	SE	4 & 5	With or without attachments	T300
4	SF	2-5	With or without attachments	T300
5	SG	2-3	Any	T500
6, 7	SH, SJ	2-3	Any	‡

† Class 8502 & 8536 Type S, Size 3 standard NEMA Type 1, 4 and 12 enclosures have space for field mounting a fused control circuit transformer. A Class **9070 Type GFT3** transformer and fuse block kit is available for Form F4T requirements in a NEMA Type 1 enclosure. NEMA Type 4 and 12 enclosures utilize a Class 9070 T150 transformer and a Class 9999 SF4 fuse block.

‡ A Class 9070 transformer is an integral part of the Size 6 and Size 7 control circuit providing 120 volt control circuit voltage as standard.

Power Poles

Single or double circuit power pole adders may be factory or field installed on 2 and 3 pole Type S contactors and starters. The table below lists the Form designation for factory installed power pole adders. Only one power pole adder may be installed per contactor.

Type	NEMA Size	Class 9999 Type	Form Designation
1 N.O.	0, 1 2	SB6 SB11	Y428 Y436
1 N.C.	0, 1 2	SB7 SB12	Y429 Y437
1 N.O., 1 N.C.	0, 1 2	SB8 SB13	Y435 Y440
2 N.O.	0, 1 2	SB9 SB14	Y430 Y438
2 N.C.	0, 1 2	SB10 SB15	Y434 Y439

© 1998 Square D All Rights Reserved

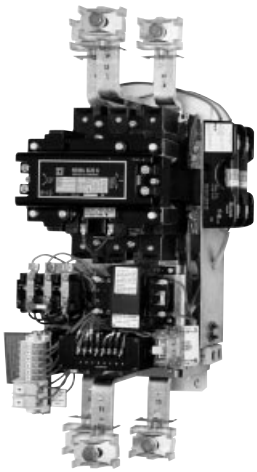

Size 6 Starter 8536 SH

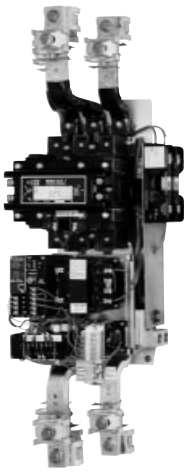

Size 7 Starter 8536 SJ

Size 6 Type SH and Size 7 Type SJ Contactors and Starters

Size 6 Type SH and Size 7 Type SJ contactors and starters have a DC coil operated by a solid state rectifier circuit mounted on the device and powered from an ac source. The Size 6 and 7 are equipped as standard with a fused control circuit transformer (Form F4T) rated 240/480-120 volts 60 hertz, 220/440-110 volts 50 hertz. The purpose of this transformer is to provide an isolated 120 volts 60 hertz, 110 volts 50 hertz, supply for the control circuit. Size 6 and 7 devices may be ordered for other system voltages by specifying the voltage and frequency desired.

Operation Rates

Continuous operation rate: 3 operations/minute maximum. Jogging or Plugging Duty: 15 operations/minute – 3 minutes maximum.

Field conversion for other system voltages is accomplished by one of the following methods, NOT BY THE USUAL PRACTICE OF CHANGING THE COIL:

1. If the factory wiring is indicated as being for 480 volts 60 hertz, 440 volts 50 hertz, conversion to 240 volts 60 hertz, 220 volts 50 hertz, can be accomplished by reconnecting the control transformer as illustrated on instruction sheet supplied with the controller. This is the same method that would be used on Class 9070 control circuit transformers.

   Conversion to any other voltage requires replacement of the control transformer. For other system voltages: i.e. 208, 277, 380, 600 volts, a new transformer with single voltage primary must be selected from table at right. Control transformer connections are illustrated on the instruction sheet supplied with the controller.
2. If the factory wiring is indicated as being for any voltage other than 480 volts 60 hertz, 440 volts 50 hertz, conversion to any other voltage requires replacement of the control transformer. Refer to table at right.
3. The standard transformer supplied may be used to power a maximum of five Class 9001 Type K illuminated operators powered with transformer type light modules. When extra capacity to power control relays or other inductive loads is required, a second transformer must be added. Extra capacity can be purchased as Form F4T with additions in 100 VA increments.
4. Standard controllers are wired for common control and are not convertible for operation of the control circuit from a separate source of supply voltage. Controllers designated Form S have special wiring designed for separate control. They are furnished with an isolating transformer, usually having a 120 volt primary and 120 volt secondary, that must not be bypassed. Form S controllers are not convertible for operation on common control.

The tables below give the replacement transformers for Type S Sizes 6 and 7 contactors and starters. To change voltages on these devices, coils are not changed, instead transformers with the desired voltage are changed.

Replacement Control Transformers for Type S Size 6

Voltage		Class 9070 Type
60 Hertz	50 Hertz	
240/480-120	220/440-110	EO3S2A
208-120	. . .	EO3S2B
277-120	. . .	EO3S2C
. . .	380-110	EO3S2D
600-120	550-110	EO3S2E
120-120	110-110	EO3S2F
240-120	220-110	EO3S2G

Replacement Control Transformers for Type S Size 7

Voltage		Class 9070 Type
60 Hertz	50 Hertz	
240/480-120	220/440-110	EO19S2A
208-120	. . .	EO19S2B
277-120	. . .	EO19S2C
. . .	380-110	EO19S2D
600-120	550-110	EO19S2E
120-120	110-110	EO19S2F
240-120	220-110	EO19S2G

Auxiliary Contacts

A N.O. holding circuit contact and a N.C. auxiliary contact are provided as standard. The holding circuit contact may or may not be required for either 3-wire or 2-wire control. Size 6 and 7 devices have an additional N.C. auxiliary contact which is wired in the coil control circuit. **DO NOT USE THIS N.C. CONTACT FOR ANY OTHER PURPOSE.**

© 1998 Square D All Rights Reserved

Class 8502 Open Type

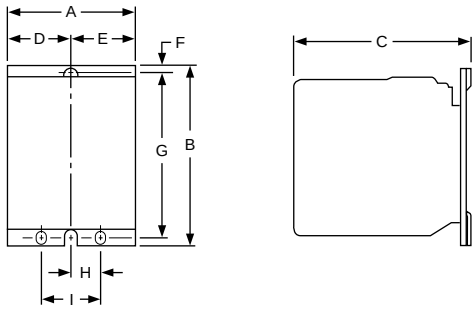

Figure 1

Class 8536 Open Type

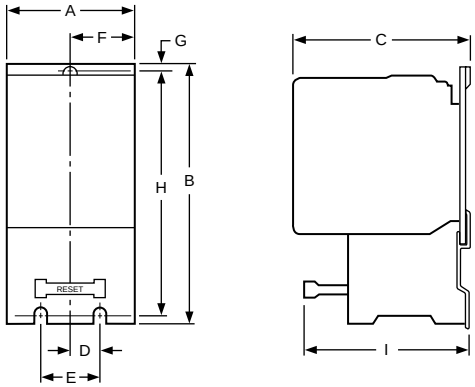

Figure 2

Class	NEMA Size	Type	No. of Poles	Fig. No.	Mtg. Screws	Dimensions – Inches/mm (Refer to Appropriate Figure)																		Wt (Lbs)
						A		B		C		D		E		F		G		H		I		
						IN	mm	IN	mm	IN	mm	IN	mm	IN	mm	IN	mm	IN	mm	IN	mm	IN	mm	
8502	00	SAO	2-3	1	(2) #10	3.22	82	4.34	110	4.22	107	1.63	41	1.63	41	.22	6	3.94	100	. . .	. . .	. . .	. . .	4
	0 1	SBO SCO	1-3 4-5	1	(2) #10	3.22 4.25	82 108	4.34 4.34	110 110	4.22 4.22	107 107	1.63 1.63	41 41	1.63 2.63	41 67	.22 .22	6 6	3.94 3.94	100 100	. . . . . .	. . . . . .	. . . . . .	. . . . . .	4 4½
	2	SDO	2-3 4-5	1	(3) #10	4.94 5.63	125 143	5.13 5.13	130 130	4.94 4.94	125 125	2.16 2.16	55 55	2.16 3.47	55 88	.22 .22	6 6	4.59 4.59	117 117	.53 .53	13 13	1.06 1.06	27 27	6¾ 8¼
	3	SEO	2-3 4-5	1	(3) ¼" (3) 5/16"	5.47 9.75	139 248	7.09 7.88	180 200	6.50 6.50	165 165	1.88 3.94	48 100	3.59 5.81	91 148	.31 .31	8 8	6.03 7.00	153 178	3.25 4.53	83 115	4.75 9.06	121 230	14 22
	4	SFO	2-3 4-5	1	(3) 5/16" (3) 5/16"	6.00 9.75	152 248	8.19 8.19	208 208	6.50 6.50	165 165	2.06 3.94	52 100	3.94 5.81	100 148	.31 .31	8 8	7.00 7.00	178 178	3.59 4.53	91 115	5.31 9.06	135 230	18 22
	5	SGO	2-3	1	(3) ½"	8.66	220	12.31	313	8.75	222	3.25	83	5.81	148	.63	16	11.13	283	4.75	121	7.25	184	45
	6	SHO	2-3	1	(3) ½"	12.34	313	28.06	713	9.00	229	3.53	90	5.78	147	5.06	129	18.56	471	4.75	121	7.25	184	80
	7	SJO	2-3	1	(3) ½"	12.34	313	37.25	946	10.88	276	3.53	90	5.78	147	7.22	183	22.38	568	4.75	121	7.25	184	135
8536	00, 0, 1, 1P	SAO-SCO	2-3	2	(3) #10	3.50	89	6.77	172	4.22	107	.50	13	1.00	25	1.61	41	.20	5	6.25	159	3.97	101	5
	0, 1	SBO-SCO	4	2	(3) #10	4.53	115	6.77	172	4.22	107	.50	13	1.00	25	2.66	68	.20	5	6.25	159	3.97	101	5½
	2	SDO	2-3 4	2	(3) #10	4.31 5.63	109 143	7.81 7.81	198 198	4.94 4.94	125 125	.50 .50	13 13	1.00 1.00	25 25	2.16 3.47	55 88	.20 .20	5 5	7.34 7.34	186 186	4.06 4.06	103 103	7¾ 9¼
	3	SEO	2-3 4	2	(3) ¼" (3) 5/16"	5.47 9.75	139 248	11.09 12.13	282 308	6.50 6.50	165 165	.88 1.81	22 46	1.75 1.75	44 44	3.59 5.81	91 148	.31 .31	8 8	10.19 11.19	259 284	5.75 5.75	146 146	17 25
	4	SFO	3 4	2	(3) 5/16" (3) 5/16"	6.00 9.75	152 248	12.88 12.88	327 327	6.50 6.50	165 165	1.81 1.81	46 46	1.75 1.75	44 44	3.94 5.91	100 150	.31 .31	8 8	11.19 11.19	284 284	5.75 5.75	146 146	22 25
	5	SGO	3	2	(3) ½"	8.56	217	17.56	446	8.75	222	4.75	121	7.25	184	5.38	137	.63	16	16.38	416	6.00	152	62
	6	SHO	3	2	(3) ½"	12.34	313	28.06	713	9.00	229	4.75	121	7.25	184	5.78	147	5.06	129	18.56	471	8.69	221	85
	7	SJO	3	2	(3) ½"	12.34	313	37.25	946	10.88	276	4.75	121	7.25	184	5.78	147	7.22	183	22.38	568	9.00	229	140

© 1998 Square D All Rights Reserved

Full Voltage Contactors and Starters — NEMA
Approximate Dimensions, Shipping Weights – Class 8502, 8536

NEMA Type 1 — General Purpose Enclosure

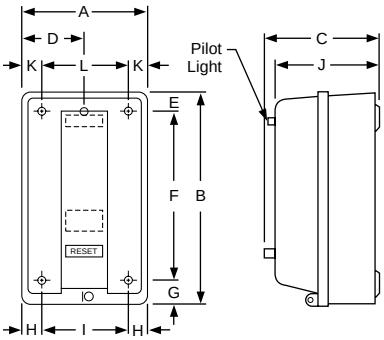

Figure 3

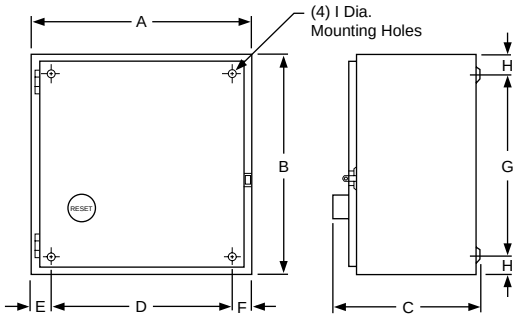

Figure 4

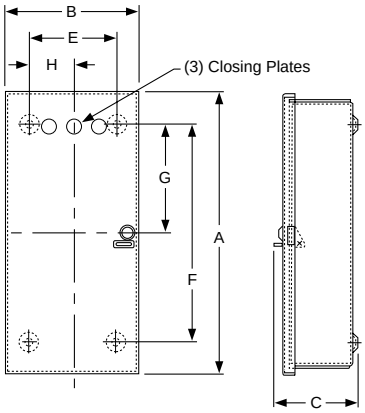

Figure 5

NEMA Size	Class	Type	No. of Poles	Fig. No.	Mtg. Screws	Dimensions – Inches/mm (Refer to Appropriate Figure)													Wt (Lbs)	
						A	B	C		D	E	F	G	H	I	J	K	L	Class 8502	Class 8536
								8502	8536											
00 0 1	8502 & 8536	SAG SBG SCG	All	3	(3) #10	**6.00** 152	**10.00** 254	**5.28** 134	**5.56** 141	**3.00** 76	**.88** 22	**8.13** 207	**1.00** 25	**.94** 24	**4.13** 105	**5.00** 127	. . .	. . .	7½	8
2	8502 & 8536	SDG	All	3	(4) ¼"	**7.81** 198	**12.69** 322	**6.03** 153	**6.31** 160	. . .	**1.09** 28	**10.50** 267	**1.09** 28	**1.09** 28	**5.63** 143	**5.75** 146	**1.09** 28	**5.63** 143	14½	15½
3	8502 & 8536	SEG	All	3	(4) ⅜"	**11.44** 291	**21.81** 554	**8.00** 203	**8.38** 213	. . .	**1.53** 39	**18.75** 476	**1.53** 39	**1.53** 39	**8.38** 213	**7.75** 197	**1.53** 39	**8.38** 213	34	37
4	8502 & 8536	SFG	All	4	(4) 7⁄16"	**11.25** 286	**25.16** 639	**9.00** 229	**9.00** 229	**8.59** 218	**1.25** 32	**1.25** 32	**22.31** 567	**1.44** 37	**.44** 11	. . .	. . .	. . .	52	56
5	8502 & 8536	SGG	All	4	(4) 9⁄16"	**17.22** 437	**44.22** 1123	**12.81** 325	**12.94** 329	**13.00** 330	**2.13** 54	**2.13** 54	**40.00** 1016	**2.13** 54	**.56** 14	. . .	. . .	. . .	143	160
6	8502 & 8536	SHG	All	5	(4) 11⁄16"	**65.75** 1670	**20.22** 514	**13.13** 334	**13.13** 334	. . .	**11.00** 279	**64.50** 1638	**2.31** 59	**5.50** 140	. . .	. . .	. . .	. . .	226	231
7	8502 & 8536	SJG	All	5	. . .	**93.00** 2362	**34.50** 876	**23.50** 597	**23.50** 597	Floor Mounting									. . .	. . .

NEMA Type 1 — General Purpose Enclosure with Form F4T

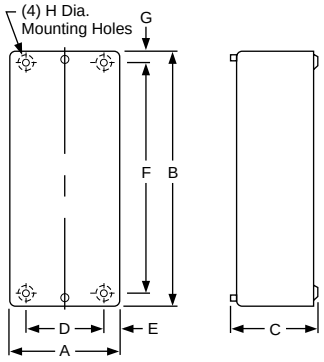

Figure 3

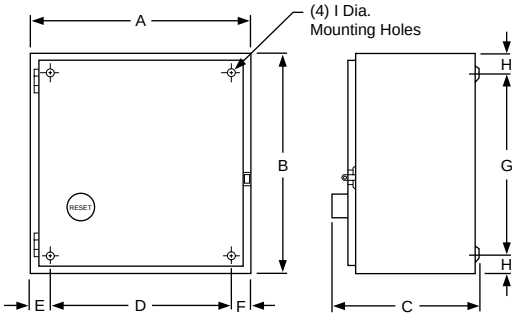

Figure 3

NEMA Size	Class	Type	No. of Poles	Fig. No.	Mtg. Screws	Dimensions – Inches/mm (Refer to Appropriate Figure)																			
						A		B		C				D		E		F		G		H		I	
										8502		8536													
						IN	mm	IN	mm	IN	mm	IN	mm	IN	mm	IN	mm	IN	mm	IN	mm	IN	mm	IN	mm
0	8502 & 8536	SBG	All	6	(4) 9⁄32	6.34	161	15.88	403	5.00	127	5.19	132	4.66	118	.84	21	14.38	365	.75	19	.28	7	. . .	. . .
1	8502 & 8536	SCG	All	6	(4) 9⁄32																				
2	8502 & 8536	SDG	All	7	(4) 5⁄16	14.88	378	14.13	359	7.56	192	7.66	195	12.75	324	1.06	27	1.06	27	12.00	305	1.06	27	.31	8
3	8502 & 8536	SEG	2–3	3	(4) ⅜	Same as Standard NEMA 1 Dimensions, see above.																			
4	8502 & 8536	SFG	2–3	7	(4) ⅜	18.16	461	29.16	741	9.25	235	9.25	235	15.50	394	1.33	34	1.33	34	26.50	673	1.33	34	.44	11
5	8502 & 8536	SGG	All	7	(4) 9⁄16	Same as Standard NEMA 1 Dimensions, see above.																			
6	8502 & 8536	SHG	All	5	(4) 11⁄16	Form F4T is supplied as standard. Refer to Page 16.																			
7	8502 & 8536	SJG	All	5	. . .																				

© 1998 Square D All Rights Reserved

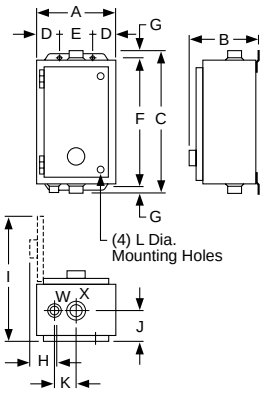

Figure 8
NEMA Type 4 & 4X
Watertight Enclosure

NEMA Type 4 & 4X — Stainless Steel Watertight Enclosures▲

NEMA Size	Class	Type	No. of Poles	Dimensions – Inches/mm (Figure 8) A	B	C	D	E	F	G	H	I	J	K	L	W. Bot. Only	X Top & Bot.	Weight (Lbs) Class 8502	Class 8536
0 & 1	8502	SBW SCW	All	**6.38** 162	**7.13** 181	**13.19** 335	**1.56** 40	**3.25** 83	**12.00** 305	**.59** 15	**1.19** 30	**11.78** 299	**1.63** 41	**2.31** 59	**.31** 8	¾" Dia. Hub	1" Dia. Hub	17	. . .
	8536	SBW SCW	All	**6.38** 162	**7.81** 198	**13.19** 335	**1.56** 40	**3.25** 83	**12.00** 305	**.59** 15	**1.88** 48	**11.78** 299	**1.63** 41	**2.31** 59	**.31** 8			. . .	18
2	8502	SDW	All	**8.13** 207	**7.88** 200	**16.19** 411	**1.56** 40	**5.00** 127	**15.00** 381	**1.09** 28	**1.94** 49	**14.75** 375	**2.00** 51	**2.63** 67	**.31** 8	¾" Dia. Hub	1½" Dia. Hub	24	. . .
	8536			**8.13** 207	**8.56** 217	**16.19** 411	**1.56** 40	**5.00** 127	**15.00** 381	**1.09** 28	**2.88** 73	**14.75** 375	**2.00** 51	**2.63** 67	**.31** 8			. . .	25
3 & 4	8502	SEW	All	**18.16** 461	**8.75** 222	**32.22** 818	**3.08** 78	**12.00** 305	**30.50** 775	**.88** 22	**3.69** 94	**26.72** 679	**2.56** 65	**3.19** 81	**.44** 11	¾" Dia. Hub	2½" Dia. Hub	65	. . .
		SFW																69	. . .
	8536	SEW	All	**18.16** 461	**9.56** 243	**32.22** 818	**3.08** 78	**12.00** 305	**30.50** 775	**.88** 22	**4.50** 114	**26.72** 679	**2.56** 65	**3.19** 81	**.44** 11	¾" Dia. Hub	2½" Dia. Hub	. . .	68
		SFW																. . .	73
5	8502 & 8536	SGW	All	**17.22** 437	**12.63** 321	**47.22** 1199	**4.13** 105	**9.00** 229	**46.00** 1168	**.63** 16	**4.59** 117	**28.31** 719	**3.13** 80	**5.75** 146	**.56** 14	¾" Dia. Hub	3½" Dia. Hub	159	176
6▲	8502 & 8536	SHW	All	**20.22** 514	**12.13** 308	**65.22** 1657	**4.13** 105	**12.00** 305	**64.00** 1626	**.63** 16	**4.59** 117	**30.81** 783	**2.69** 68	**4.50** 114	**.56** 14	¾" Dia. Hub	(2) 3" Dia. Hub	227	232
7▲	8502 & 8536	SJW	All	**34.50** 876	**23.50** 597	**101.00** 2565	Floor Mounting											. . .	. . .

▲ Size 6 and 7 are sheet steel enclosures and are rated NEMA Type 4 only.

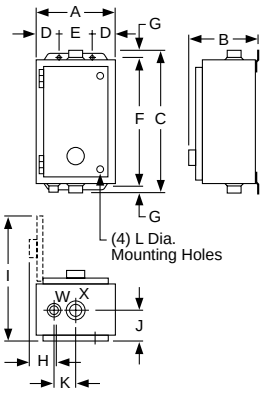

Figure 9
NEMA Type 4 & 4X
Watertight Enclosure

NEMA Type 4 & 4X — Stainless Steel Watertight Enclosures with Form F4T▲

NEMA Size	Class	Type	No. of Poles	Dimensions – Inches/mm (Figure 9) A	B	C	D	E	F	G	H	I	J	K	L	W Bot. Only	X Top & Bot.
0 & 1	8502	SBW SCW	All	**12.63** 321	**7.13** 181	**4.69** 119	**2.56** 65	**7.50** 191	**13.50** 343	**.59** 15	**3.19** 81	**18.41** 468	**1.66** 42	**2.31** 59	**.31** 8	¾	1
	8536	SBW SCW	All	**12.63** 321	**7.81** 198	**14.69** 373	**2.56** 65	**7.50** 191	**13.50** 343	**.59** 15	**3.88** 99	**18.41** 468	**1.66** 42	**2.31** 59	**.31** 8	¾	1
2	8502	SDW	All	**14.88** 378	**7.56** 192	**16.31** 414	**2.56** 65	**9.75** 248	**15.00** 381	**.66** 17	**3.19** 81	**20.88** 530	**2.00** 51	**2.63** 67	**.31** 8	¾	1½
	8536			**14.88** 378	**8.25** 210	**16.31** 414	**2.56** 65	**9.75** 248	**15.00** 381	**.66** 17	**3.88** 99	**20.88** 530	**2.00** 51	**2.63** 67	**.31** 8	¾	1½
3 & 4	8502	SEW SFW	2-3	Same as Standard NEMA Type 4 dimensions, see above.													
	8536	SEW SFW	2-3	See as Standard NEMA Type 4 dimensions, see above.													
5	8502 & 8536	SGW	All	Same as Standard NEMA Type 4 dimensions, see above.													
6▲	8502 & 8536	SHW	All	Form F4T is supplied as standard. Refer to Page 16.													
7▲	8502 & 8536	SJW	All														

▲ Size 6 and 7 are sheet steel enclosures and are rated NEMA Type 4 only.

© 1998 Square D All Rights Reserved

Full Voltage Contactors and Starters — NEMA
Approximate Dimensions, Shipping Weights – Class 8502, 8536

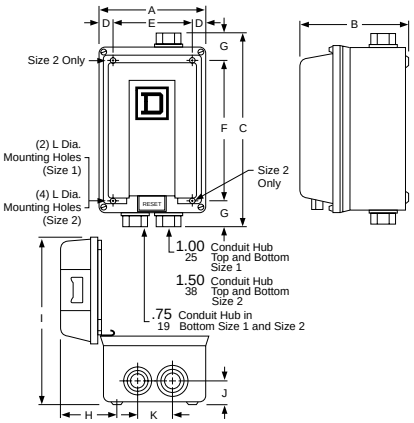

Figure 10A

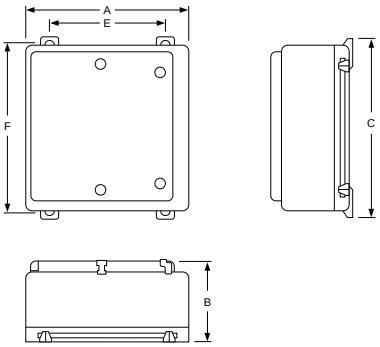

Figure 10B

NEMA Type 4X — Watertight and Corrosion Resistant Glass Polyester Enclosures

NEMA Size	Class	Type	No. of Poles	Fig.	Dimensions — Inches/mm (Figure 11)																								Bot. Hub Only	Top & Bot. Hub	Wt (Lbs)
					A		B		C		D		E		F		G		H		I		J		K		L		W	X	
					IN	mm	IN	mm	IN	mm	IN	mm	IN	mm	IN	mm	IN	mm	IN	mm	IN	mm	IN	mm	IN	mm	IN	mm			
0, 1	8502 & 8536	SBW SCW	All	10A	6.50	165	6.44	164	12.13	308	.75	19	5.00	127	8.75	222	1.69	43	3.34	85	10.06	256	1.31	33	2.13	54	.31	8	¾	1	17
2	8502 & 8536	SDW	All	10B	8.50	216	7.06	179	13.88	353	.75	19	7.00	179	10.50	267	1.69	43	3.91	99	11.94	303	1.63	41	2.38	60	.31	8	¾	1½	22
0-2∗	8502 & 8536	SBW SCW SDW	All	10B	16.88	429	9.78	248	22.75	578	. . .	. . .	10.13	257	21.50	546	. . .	. . .	. . .	. . .	. . .	. . .	. . .	. . .	. . .	. . .	. . .	. . .	. . .	. . .	. . .
3-4†	8502 & 8536	SEW SFW	All	10B	25.81	656	11.94	303	33.50	851	. . .	. . .	18.50	470	32.25	819	. . .	. . .	. . .	. . .	. . .	. . .	. . .	. . .	. . .	. . .	. . .	. . .	. . .	. . .	. . .

∗ With control power transformer (Form F4T).
† Dimensions also for Form F4T.

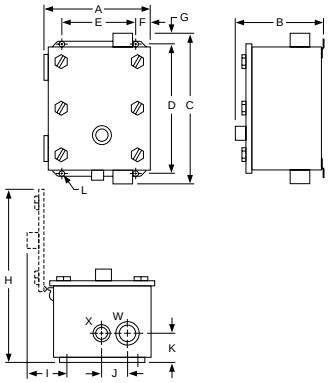

Figure 11

NEMA Type 9 Enclosures for Hazardous Locations — Sheet Steel

NEMA Size	Type	No. of Poles	Dimensions — Inches/mm (Figure 11)																						X Bot. Only	W Top & Bot.	Wt (Lbs)
			A		B		C		D		E		F		G		H		I		J		K				
			IN	mm	IN	mm	IN	mm	IN	mm	IN	mm	IN	mm	IN	mm	IN	mm	IN	mm	IN	mm	IN	mm			
0	SBE	2-4	8.84	225	8.22	209	13.00	330	12.00	305	6.00	152	1.38	35	.50	13	14.69	373	3.91	99	2.13	54	2.00	51	¾" Dia. Hub	1" Dia. Hub	24½
1	SCE																										
2	SDE	2-4	10.34	263	8.97	228	16.13	410	15.00	381	7.50	191	1.38	35	.56	14	16.94	430	3.91	99	2.75	70	2.38	60	¾" Dia. Hub	1½" Dia. Hub	31¼
3	SEE	2-4	12.84	326	9.72	247	24.16	614	22.25	565	9.00	229	1.88	48	.97	25	20.56	522	4.41	112	3.25	83	2.88	73	¾" Dia. Hub	2" Dia. Hub	54
4	SFE	2-4	15.84	402	9.72	247	34.16	868	32.25	819	12.00	305	1.88	48	.97	25	23.56	598	4.41	112	3.25	83	2.88	73	¾" Dia. Hub	2½" Dia. Hub	74

NOTE: Devices with Form F4T may use larger enclosure. Consult local Square D Field Office for dimensions.

© 1998 Square D All Rights Reserved

NEMA Type 7 & 9 Enclosures for Hazardous Locations
Sizes 0-2, Bolted Cover, Cast Iron, Sizes 0-5, Bolted Cover, Cast Aluminum, Sizes 0-5, SPIN TOP®, Cast Aluminum

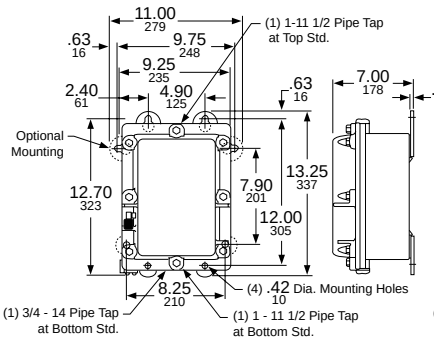

Figure 12 Size 0 and 1

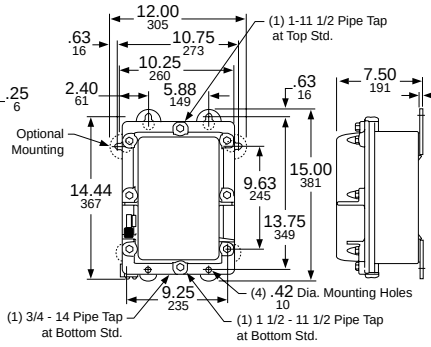

Figure 13 Size 2

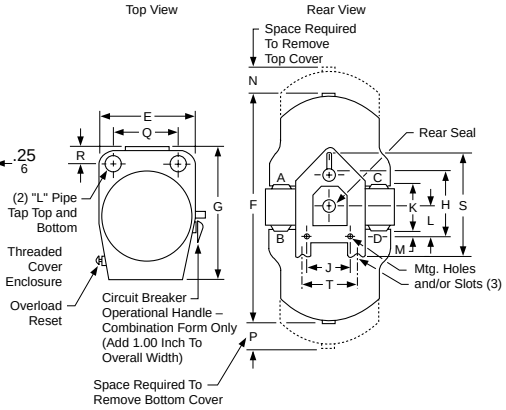

Figure 14 Size 0-5

NEMA 7 & 9 Bolted Cover, Cast Iron

NEMA Size	Type	Dimensions — Inches/mm															Wt (Lbs)
		A	B	C	D	E	F	G	H	J	K	L	M	N	P	R	
0, 1	SBT SCT	See Figure 12															59
2	SDT	See Figure 13															75

NEMA 7 & 9 SPIN TOP® Enclosure – Figure 14

NEMA Size	Type	Dimensions — Inches/mm																			Wt (Lbs)
		A	B∗	B†	C∗	C†	D	E∗	E†	F	G	H∗	H†	J	K	L	M	N	P	R	
0-1	SBR SCR	**10.63** 270	**25.06** 637	**30.06** 764	**34.69** 881	**47.69** 1211	**14.69** 373	**6.25** 159	**11.25** 286	**7.69** 195	**11.13** 283	**2.00** 51	**9.00** 229	**7.63** 194	**7.38** 187	**2.06** 52	**9.38** 238	**5.25** 133	**1.25** 32	**.38** 10	70
2	SDR	**12.00** 305	**29.31** 744	**34.31** 871	**42.81** 1087	**54.81** 1392	**16.75** 425	**6.75** 171	**11.75** 298	**7.69** 195	**14.75** 375	**3.00** 76	**9.00** 229	**11.50** 292	**8.50** 216	**2.06** 52	**9.38** 238	**5.25** 133	**1.50** 38	**.38** 10	100
3-4	SER SFR	**16.13** 410	**37.50** 953	**40.50** 1029	**60.00** 1524	**66.50** 1689	**20.25** 514	**8.63** 219	**11.63** 295	**8.63** 219	**20.25** 514	**4.50** 114	**8.00** 203	**18.00** 457	**12.00** 305	**2.63** 67	**11.00** 279	**5.50** 140	**2.50** 64	**.50** 13	165 195
5	SGR	**20.75** 527	**62.13** 1578	**62.13** 1578	**103.63** 2632	**103.63** 2632	**25.75** 654	**24.13** 613	**24.13** 613	**13.88** 353	**24.13** 613	**20.00** 508	**20.00** 508	**21.50** 546	**14.38** 365	**4.75** 121	**17.00** 432	**8.00** 203	**4.00** 102	**.63** 16	375

∗ Without control transformer.
† With control transformer (Form F4T)

NEMA 7 & 9 Bolted Cover, Cast Aluminum

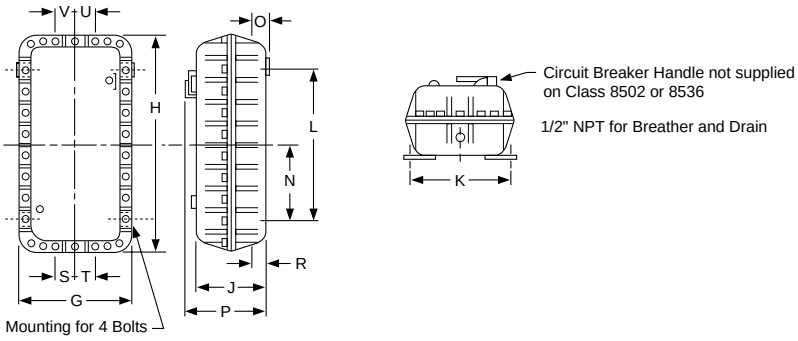

Figure 15

NEMA Size	Type	Dimensions — Inches/mm																		Wt (Lbs)
		G		H		J		K		L		N		P		Q, R		S, T, U, V		
		IN	mm	IN	mm	IN	mm	IN	mm	IN	mm	IN	mm	IN	mm	IN	mm	IN	mm	
0-1	SBT SCT	14.25	362	17.25	438	9.50	241	12.25	311	8.88	226	4.50	114	11.00	279	2.38	60	3.13	80	75
2	SDT	13.63	346	27.63	702	9.50	241	12.25	311	19.25	489	9.63	245	11.00	279	2.38	60	3.13	80	115
3-4	SET SFT	18.13	461	13.63	346	10.00	254	16.25	413	19.25	489	9.63	245	12.63	321	2.38	60	3.75	95	180
5	SGT	24.50	622	45.63	1159	13.75	349	22.50	572	27.50	699	13.75	349	15.38	391	3.44	87	4.00	102	500

© 1998 Square D All Rights Reserved

Full Voltage Contactors and Starters — NEMA
Approximate Dimensions, Shipping Weights – Class 8502, 8536

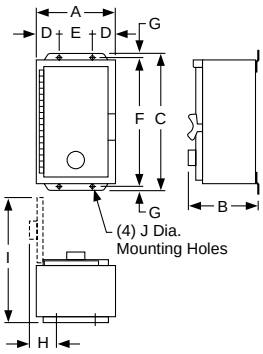

Figure 16
NEMA Type 12
Industrial Use
Enclosure

NEMA Type 12 — Dusttight Enclosure

NEMA Size	Class	Type	No. of Poles	Dimensions – Inches/mm (Figure 16)										Weight (Lbs)	
				A	B	C	D	E	F	G	H	I	J	Class 8502	Class 8536
0	8502 & 8536	SBA	All	**6.38** 162	**8.53** 217	**12.75** 324	**1.56** 40	**3.25** 83	**12.00** 305	**.38** 10	**3.56** 90	**12.25** 311	**.31** 8	15	16
1		SCA													
2	8502 & 8536	SDA	All	**8.13** 207	**9.28** 236	**16.00** 406	**1.56** 40	**5.00** 127	**15.00** 381	**.50** 13	**3.56** 90	**15.38** 391	**.31** 8	22	23
3	8502 & 8536	SEA	All	**18.16** 461	**9.56** 243	**31.50** 800	**3.08** 78	**12.00** 305	**30.50** 775	**.50** 13	**4.50** 114	**26.72** 679	**.44** 11	65	68
4		SFA												69	73
5	8502 & 8536	SGA	All	**17.22** 437	**13.44** 341	**47.00** 1194	**4.13** 105	**9.00** 229	**46.00** 1168	**.50** 13	**5.41** 137	**28.31** 719	**.56** 14	160	177
6	8502 & 8536	SHA	All	**20.22** 514	**13.00** 330	**65.00** 1651	**4.13** 105	**12.00** 305	**64.00** 1626	**.50** 13	**6.44** 164	**30.88** 784	**.69** 18	228	233
7	8502 & 8536	SJA	All	**34.50** 876	**23.50** 597	**93.00** 2362	Floor Mounting							. . .	. . .

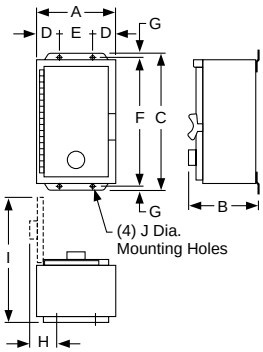

Figure 17
NEMA Type 12
Industrial Use
Enclosure

NEMA Type 12 — Dusttight Enclosure with Form F4T

NEMA Size	Class	Type	No. of Poles	Dimensions – Inches/mm (Figure 17)																			
				A		B		C		D		E		F		G		H		I		J	
				IN	mm	IN	mm	IN	mm	IN	mm	IN	mm	IN	mm	IN	mm	IN	mm	IN	mm	IN	mm
0	8502 & 8536	SBA	All	11.88	302	8.00	203	13.50	343	2.81	71	6.75	171	12.75	324	.38	10	3.91	99	18.38	467	.31	8
1		SCA																					
2	8502 & 8536	SDA	All	14.88	378	8.13	207	16.00	406	2.56	65	9.75	248	15.00	381	.38	10	3.66	93	21.50	546	.31	8
3	8502 & 8536	SEA	2–3	Same as Standard NEMA Type 12 dimensions, see above.																			
4		SFA																					
5	8502 & 8536	SGA	All																				
6	8502 & 8536	SHA	All	Form F4T is supplied as standard. Refer to Page 16.																			
7	8502 & 8536	SJA	All																				

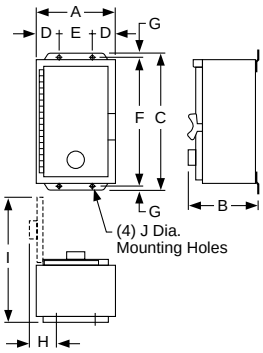

Figure 18
NEMA Type 3R
Outdoor Use
Enclosure

NEMA Type 3R — Rainproof and Sleet Resistant Enclosures

NEMA Size	Class	Type	No. of Poles	Dimensions — Inches/mm (Figure 17)																		
				A	B	C	D1	D2	E	F	G1	G2	H1	H2	J	K	L	M	N	P	K.O. X	K.O. Y
0 & 1	8502 & 8536	SBH, SCH	All	**8.84** 225	**12.28** 312	**7.13** 181	**1.38** 35	**1.44** 37	**6.00** 152	**7.50** 191	**2.59** 66	**2.19** 56	**2.06** 52	**2.63** 67	**14.28** 363	**1.38** 35	**1.38** 35	**1.88** 48	**4.38** 111	**1.84** 47	½ ¾ 1	½ ¾ 1
2	8502 & 8536	SDH	All	**9.84** 250	**16.28** 414	**8.63** 219	**1.38** 35	**1.44** 37	**7.00** 178	**11.50** 292	**2.59** 66	**2.19** 56	**2.06** 52	**2.63** 67	**16.78** 426	**1.31** 33	**1.75** 44	**2.13** 54	**4.88** 124	**1.84** 47	1 1¼ 1½	½ ¾
3	8502 & 8536	SEH	All	**12.84** 326	**25.28** 642	**8.63** 219	**1.38** 35	**1.44** 37	**10.00** 254	**20.50** 521	**2.59** 66	**2.19** 56	**2.06** 52	**2.63** 67	**19.78** 502	**1.31** 33	**1.94** 49	**2.44** 62	**6.38** 162	**1.84** 47	1 1¼ 2 2½	½ ¾
4	8502 & 8536	SFH	All	**12.84** 326	**40.28** 1023	**9.13** 232	**1.38** 35	**1.44** 37	**10.00** 254	**35.50** 902	**2.59** 66	**2.19** 56	**2.06** 52	**2.63** 67	**20.28** 515	**1.31** 33	**2.31** 59	**2.69** 68	**6.38** 162	**1.84** 47	1 1¼ 2 2½	½ ¾

© 1998 Square D All Rights Reserved

Class 8502 Type WF Vacuum Contactor

Electrical Ratings

Characteristic	Size 4	Size 5	Size 6
Maximum Motor HP at:			
200 V	40	75	150
230 V	50	100	200
380 V	75	150	300
460 V	100	200	400
575 V	100	200	400
3 Phase Capacitor Switching – KVAR			
230 V	40	80	160
460 V	80	160	320
575 V	100	200	400
Transformer Switching – KVA 3 Phase, 3-Pole			
240 V	23	47	94
480 V	47	94	188
600 V	59	117	234
Coil Data			
Inrush VA	300	600	1450
Sealed VA	30	20	32
Sealed Watts	6	20	30
Pick-up Volts	70% of rated coil voltage		
Drop-out Volts	50% of rated coil voltage		
Pick-up Time (ms)	18-22	24-32	24-32
Drop-out Time (ms)	90-120	96-100	96-100
Additional Electrical Characteristics			
Number of Poles	3	3	3
Max. Voltage Rating	600	600	600
Enclosed Ampere Rating	135	270	540
Max. Closing Current	1600	3000	6000
Max. Interrupting Current	1600	3000	6000
Short Time Current (RMS):			
1 second	2400	4500	9000
2 seconds	1600	3000	6000
Dielectric Strength, volts	5375	5375	5375
Max. Allowable Interrupting	1200/hr	1200/hr	1200/hr
Impulse Voltage, VA (1 x 40ms)	15000	15000	15000

General Information

Class 8502 Type W non-reversing vacuum contactors are a new addition to the Square D line of contactors. These contactors are used to switch capacitors, transformers and electric motors where overload protection is separately provided. Type W vacuum contactors are designed for operation at 600 Volts, 50/60 Hertz.

By design, these contactors are well suited to heavy-duty applications in harsh environments. The power contacts are sealed in ceramic tubes, called vacuum interrupters or vacuum bottles, where the air has been evacuated. Arc quenchers are not required because any arc formed between opening contacts is not sustained due to the presence of the vacuum. The arc is extinguished when the current crosses zero after the contacts are opened, therefore the arc typically does not survive more than one half cycle. There is one vacuum interrupter or bottle per pole, therefore a three pole contactor has three vacuum interrupters or bottles. The power contacts are not affected by ambient conditions or contamination. This provides for long life and reliable operation in harsh applications.

File E78351
CCN NLDX2

LR75167, 75168
Class 3211-04

Altitude

The vacuum contactor is designed to tolerate normal barometric pressure variances up to 6600 feet above sea level. If the contactor is to be used above 6600 feet above sea level, please consult the factory.

Termination Means

The Size 4 vacuum contactor is supplied with line and load side lugs∗. The Size 5 and 6 vacuum contactors are supplied without line and load side lugs. Class 9999 Type LUW5 and LUW6 lug kits are available for the Size 5 and 6 contactors. These kits include six lugs and the necessary mounting hardware.

Auxiliary Contacts

An auxiliary contact block, Class 9999 Type WX11, with one normally-open contact and normally-closed contact is used with the Size 4, 5 and 6 vacuum contactors.

Auxiliary Contact Units

Auxiliary contact units may be added in the field. the table below shows the maximum number of units that may be added to a given size contactor (in addition to the coil auxiliary contact).

Class 8502	
Size 4	3
Size 5	4
Size 6	4

Terminals

Size	Power Terminals Wire Size▲ Min. – Max.	Control Terminals Wire Size▲ Min. – Max.
4	#12-4/0	#16-12
5■	One #0-500 kcmil per phase	#16-12
6■	Two #0-500 kcmil per phase	#16-12

■ Power terminal lugs are not supplied on Size 5 and 6 contactors. Values in table reflect those for the Size 5 and 6 lug kits, Class 9999 Type LUW5 and LUW6 respectively.
▲ Solid or stranded copper wire.

© 1998 Square D All Rights Reserved

Full Voltage Contactors — NEMA
Selection – Class 8502

Class 8502 – Full Voltage Vacuum Contactors

NEMA Size	Enclosed Ampere Rating	Locked Rotor Current (Amps)	Motor Volts	Max. HP	* Coil Voltage	Open Type	NEMA Type 1 General Purpose Enclosure	NEMA Type 4 & 4X Watertight, Dusttight Brushed Stainless Steel Enclosure (Size 4 & 5 only)	NEMA Type 12 Dusttight & Driptight Industrial Use Enclosure
						Type	Type	Type	Type
4	135	1080	200 230 380 460 575	40 50 75 100 100	120 240 120 480 600	WFO3V02S WFO3V03 WFO3V02S WFO3V06 WFO3V07	WFG3V02S WFG3V03 WFG3V002S WFG3V06 WFG3V07	WFW3V02S WFW3V03 WFW3V02S WFW3V06 WFW3V07	WFA3V02S WFA3V03 WFA3V02S WFA3V06 WFA3V07
5	270	2160	200 230 380 460 575	75 100 150 200 200	120 240 120 480 600	WGO3V02S WGO3V03 WGO3V02S WGO3V06 WGO3V07	WGG3V02S WGG3V03 WGG3V002S WGG3V06 WGG3V07	WGW3V02S WGW3V03 WGW3V02S WGW3V06 WGW3V07	WGA3V02S WGA3V03 WGA3V02S WGA3V06 WGA3V07
6	540	4320	200 230 380 460 575	150 200 300 400 400	120 240 120 480 600	WHO3V02S WHO3V03 WHO3V02S WHO3V06 WHO3V07	WHG3V02S WHG3V03 WHG3V002S WHG3V06 WHG3V07	WHW3V02S WHW3V03 WHW3V02S WHW3V06 WHW3V07	WHA3V02S WHA3V03 WHA3V02S WHA3V06 WHA3V07

* Consult factory for availability of enclosed devices.

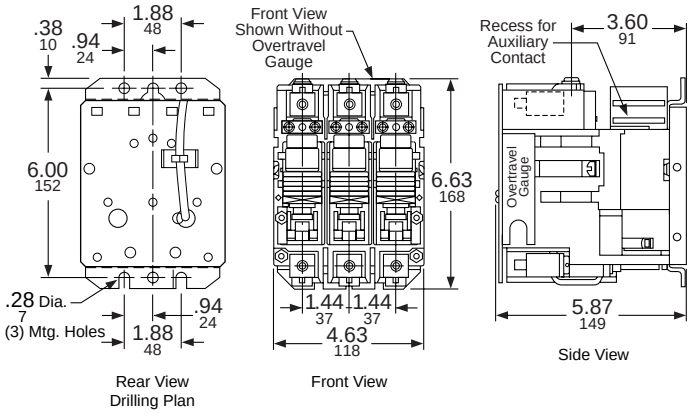

Class 8502 Type WF

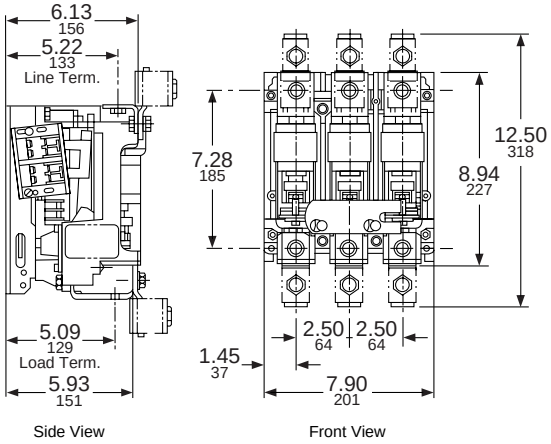

Class 8502 Type WG

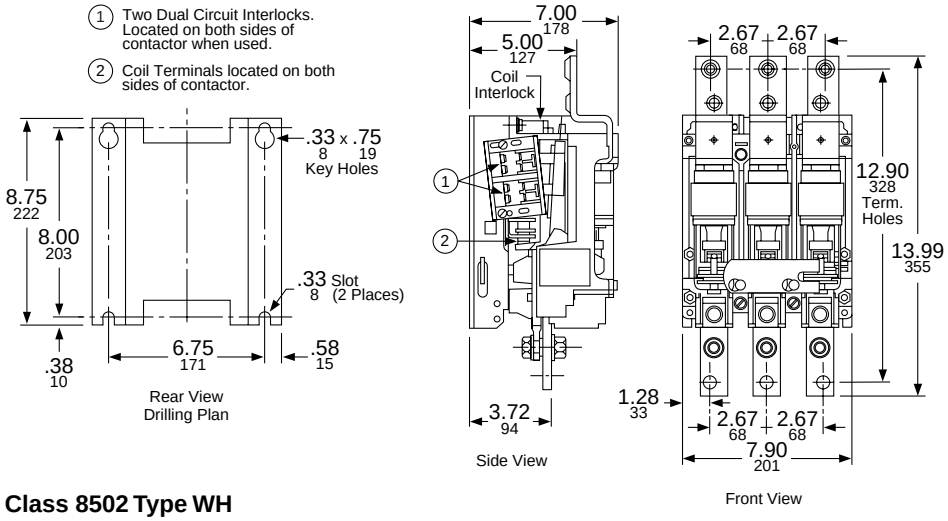

Class 8502 Type WH

© 1998 Square D All Rights Reserved

SECTION 2 – REVERSING MAGNETIC STARTERS AND CONTACTORS

Application Data – Class 8702, 8736 27-28
Selection – Class 8702 29-30
Selection – Class 8736 31-32
Application Data – Class 8702, 8736 33
Approximate Dimensions – Class 8702, 8736 34-36
Application Data, Selection – Class 8702 Vacuum Contactor 37
Selection – Class 8702 38

© 1998 Square D All Rights Reserved

© 1998 Square D All Rights Reserved

Size 00, 0, 1
Reversing Contactor

AC MAGNETIC REVERSING CONTACTORS CLASS 8702

General Information

Class 8702 Type S reversing magnetic contactors are used for starting, stopping, and reversing AC motors where overload protection is separately provided. Class 8702 reversing contactors are available in NEMA Sizes 00-7. Class 8702 reversing contactors consist of two Class 8502 contactors mechanically and electrically interlocked. Open type devices, Sizes 0-5 are available in either horizontal or vertical arrangements. Sizes 00, 6, and 7 are available as horizontal only. Enclosed devices, Size 00-7 use horizontally arranged components. Type S reversing contactors are designed for operation at 600 Volts AC, 50-60 Hertz.

Size 00, 0, 1
Reversing Starter

AC MAGNETIC REVERSING STARTERS CLASS 8736

General Information

Class 8736 Type S reversing magnetic starters are used for full voltage starting, stopping, and reversing AC squirrel cage motors. Class 8736 reversing starters are available in NEMA Sizes 00-7. Class 8736 reversing starters consist of one Class 8502 contactor and one Class 8536 starter mechanically and electrically interlocked. Open type devices, Sizes 0-5 are available in either horizontal or vertical arrangements. Sizes 00, 6, and 7 are available as horizontal only. Enclosed devices use horizontally arranged components. Motor overload protection is provided by melting alloy type thermal overload relays. Type S starters are designed for operation at 600 Volts AC, 50-60 Hertz.

Overload Relays

Class 8736 Type S Size 00-6 reversing starters are provided with melting alloy thermal overload relay as standard. Interchangeable thermal units are available in standard trip Sizes 00-6, quick trip Sizes 00-4, and slow trip Sizes 00-3. Single phase starters use one thermal unit, three phase starters use three thermal units.

Class 8736 Size 7 starters are provided with solid state overload Motor Logic, which has selectable trip Class 10/20, Ground Fault Detection, and Communication capabilities for future enhancements. The solid state overload relay is ambient insensitive and features phase loss, phase unbalance and over-current protection.

MOTOR LOGIC™ Solid State Overload Relay (SSOLR)

Solid state overload relays are available for Sizes 00-7 starters. These ambient insensitive overload relays provide phase loss protection, phase unbalance protection and LED power indicator. For additional information see the Class 9065 catalog section. To order Type S starters with solid state overload relays, see Factory Modification (FORMS).

Bimetallic overload relays are also available for Sizes 0-6. Ambient Compensated and Non-compensated versions are supplied with manual and automatic reset, trip current adjustment, and an alarm contact on Sizes 0-2. For additional information, see the Class 9065 catalog section. To order Type S starters with bimetallic overload relays, see Factory Modifications (FORMS).

Enclosures

Class 8702 and 8736 reversing magnetic contactors and starters are available in the following enclosures:

- NEMA Type 1 General Purpose Enclosure
- NEMA Type 4 & 4X Watertight and Dusttight
- NEMA Type 7 & 9 Bolted and Spin-Top for Hazardous Locations
- NEMA Type 12 Dusttight and Driptight for Industrial Use

The NEMA Type 4 and 4X stainless steel enclosure (Sizes 0-5) has a brushed finish. For an electropolished finish, specify Form G16 and add 15% to the price of the standard device. Sizes 6 and 7 are painted sheet steel and are rated NEMA Type 4 only.

Also, NEMA Type 12 devices are available UL Listed for use in Class II, Division 2, Group G and Class III, Divisions 1 and 2 locations. Request Form G21, no additional charge.

Separate enclosures are available, see Class 9991.

© 1998 Square D All Rights Reserved

Holding Circuit Contact

Two normally open holding circuit contacts are provided on all reversing contactors and starters as standard. Sizes 00-2 contactors use a Class 9999 SX11 auxiliary contact as the holding circuit contact. Sizes 3-7 contactors use a Class 9999 SX6 auxiliary contact as the holding circuit contact. Additionally, two normally closed auxiliary contacts are provided as standard and wired to prevent energization of both coils at the same time. Sizes 00-2 use a Class 9999 SX12 auxiliary contact while Sizes 3-7 use a Class 9999 SX7 auxiliary contact for this purpose. See Class 9999, for the holding circuit contact electrical ratings.

Coil Voltages

AC coils are available for application on 50-60 Hertz. NEMA Sizes 00-5 are supplied with coils that are designed to operate satisfactorily on line voltages of 85%-110% of rated voltage. NEMA Size 6 and 7 contactors are supplied with a DC coil operated by a solid state rectifier circuit that is powered by an AC source.

Please note that **Voltage Codes** have been added to the Type designations in order to improve customer service. It is necessary to include the Voltage Code when ordering contactors and starters. Also, 120 Volt Polyphase reversing contactors and starters will be wired for separate control.

Mechanical Interlocks

Mechanical interlocks are available for replacement or field assembly of Type S reversing contactors and starters (Sizes 00-4 ONLY). See Class 9999 for additional information.

Auxiliary Contacts

Additional auxiliary contacts may be added to Type S reversing contactors and starters. See Page 33 for maximum number of auxiliary units and Form designations for factory installed auxiliary contacts. See Class 9999 for auxiliary contact kits for field installation.

Type S Accessories

Additional accessories such as power poles, pneumatic timer attachments, and cover mounted control stations are available as factory or field modifications.

File E78351
CCN NLDX

File LR60905
Class 3211-04

© 1998 Square D All Rights Reserved

3-Pole Polyphase — 600 Volts AC Maximum — 50-60 Hertz

NEMA Size	Continuous Current Ratings	Motor Volts	Max. HP	* Coil Voltage	Open Type		NEMA Type 1 General Purpose Enclosure	NEMA Type 4 & 4X Watertight, Dusttight Brushed Stainless Steel Enclosure (Sizes 0-5)♦	NEMA Type 7 & 9 Hazardous Locations Class I, Groups C & D Class II, Groups E, F & G		NEMA Type 12 Dusttight & Driptight Industrial Use Enclosure
					Vertical Type	Horizontal Type	Type	Type	Bolted Type Aluminum	SPIN TOP® Type	Type
00	9	Separate Control†		120	. . .	SAO4V02S	SAG4V02S	Use Size 0	Use Size 0	Use Size 0	Use Size 0
		200	1½	208	. . .	SAO4V08	SAG4V08				
		230	1½	240	. . .	SAO4V03	SAG4V03				
		460	2	480	. . .	SAO4V06	SAG4V06				
		575	2	600	. . .	SAO4V07	SAG4V07				
0	18	Separate Control†		120	SBO12V02S	SBO4V02S	SBG4V02S	SBW14V02S	SBT49V02S	SBR9V02S	SBA4V02S
		200	3	208	SBO12V08	SBO4V08	SBG4V08	SBW14V08	SBT49V08	SBR9V08	SBA4V08
		230	3	240	SBO12V03	SBO4V03	SBG4V03	SBW14V03	SBT49V03	SBR9V03	SBA4V03
		460	5	480	SBO12V06	SBO4V06	SBG4V06	SBW14V06	SBT49V06	SBR9V06	SBA4V06
		575	5	600	SBO12V07	SBO4V07	SBG4V07	SBW14V07	SBT49V07	SBR9V07	SBA4V07
1	27	Separate Control†		120	SCO7V02S	SCO8V02S	SCG8V02S	SCW14V02S	SCT49V02S	SCR9V02S	SCA4V02S
		200	7½	208	SCO7V08	SCO8V08	SCG8V08	SCW14V08	SCT49V08	SCR9V08	SCA4V08
		230	7½	240	SCO7V03	SCO8V03	SCG8V03	SCW14V03	SCT49V03	SCR9V03	SCA4V03
		460	10	480	SCO7V06	SCO8V06	SCG8V06	SCW14V06	SCT49V06	SCR9V06	SCA4V06
		575	10	600	SCO7V07	SCO8V07	SCG8V07	SCW14V07	SCT49V07	SCR9V07	SCA4V07
2	45	Separate Control†		120	SDO1V02S	SDO2V02S	SDG2V02S	SDW11V02S	SDT43V02S	SDR3V02S	SDA1V02S
		200	10	208	SDO1V08	SDO2V08	SDG2V08	SDW11V08	SDT43V08	SDR3V08	SDA1V08
		230	15	240	SDO1V03	SDO2V03	SDG2V03	SDW11V03	SDT43V03	SDR3V03	SDA1V03
		460	25	480	SDO1V06	SDO2V06	SDG2V06	SDW11V06	SDT43V06	SDR3V06	SDA1V06
		575	25	600	SDO1V07	SDO2V07	SDG2V07	SDW11V07	SDT43V07	SDR3V07	SDA1V07
3	90	Separate Control†		120	SEO1V02S	SEO2V02S	SEG2V02S	SEW11V02S	SET43V02S	SER3V02S	SEA1V02S
		200	25	208	SEO1V08	SEO2V08	SEG2V08	SEW11V08	SET43V08	SER3V08	SEA1V08
		230	30	240	SEO1V03	SEO2V03	SEG2V03	SEW11V03	SET43V03	SER3V03	SEA1V03
		460	50	480	SEO1V06	SEO2V06	SEG2V06	SEW11V06	SET43V06	SER3V06	SEA1V06
		575	540	600	SEO1V07	SEO2V07	SEG2V07	SEW11V07	SET43V07	SER3V07	SEA1V07
4	135	Separate Control†		120	SFO1V02S	SFO3V02S	SFG3V02S	SFW11V02S	. . .	. . .	SFA1V02S
		200	40	208	SFO1V08	SFO3V08	SFG3V08	SFW11V08			SFA1V08
		230	50	240	SFO1V03	SFO3V03	SFG3V03	SFW11V03			SFA1V03
		460	100	480	SFO1V06	SFO3V06	SFG3V06	SFW11V06			SFA1V06
		575	100	600	SFO1V07	SFO3V07	SFG3V07	SFW11V07			SFA1V07
5	270	Separate Control†		120	SGO1V02S	SGO3V02S	SGG3V02S	SGW11V02S	. . .	. . .	SGA1V02S
		200	75	208	SGO1V08	SGO3V08	SGG3V08	SGW11V08			SGA1V08
		230	100	240	SGO1V03	SGO3V03	SGG3V03	SGW11V03			SGA1V03
		460	200	480	SGO1V06	SGO3V06	SGG3V06	SGW11V06			SGA1V06
		575	200	600	SGO1V07	SGO3V07	SGG3V07	SGW11V07			SGA1V07
6	540	Separate Control†		120	. . .	SHO1V02S	SHG1V02S	SHW1V02S	. . .	. . .	SHA1V02S
		200	150	208		SHO1V08	SHG1V08	SHW1V08			SHA1V08
		230	200	240		SHO1V03	SHG1V03	SHW1V03			SHA1V03
		460	400	480		SHO1V06	SHG1V06	SHW1V06			SHA1V06
		575	400	600		SHO1V07	SHG1V07	SHW1V07			SHA1V07
7	810	Separate Control†		120	. . .	SJO1V02S	SJG1V02S	SJW1V02S	. . .	. . .	SJA1V02S
		200	—	208		SJO1V08	SJG1V08	SJW1V08			SJA1V08
		230	300	240		SJO1V03	SJG1V03	SJW1V03			SJA1V03
		460	600	480		SJO1V06	SJG1V06	SJW1V06			SJA1V06
		575	600	600		SJO1V07	SJG1V07	SJW1V07			SJA1V07

♦ Size 6 and 7 are rated NEMA Type 4 only.
† 120 Volt Polyphase contactors are wired for separate control.
* Coil voltage code must be specified to order this product. Refer to standard coil voltage codes listed in selection table above or additional standard voltage codes below and insert as shown in the HOW TO ORDER block.

Coil Voltage Codes

Voltage		Code
60 Hz	50 Hz	
24▲	. . .	V01†▲
120	110	V02†
208	. . .	V08
240	220	V03
480	440	V06
600	550	V07
Specify	Specify	V99

▲ 24 V coils are not available on Sizes 4-7. On Sizes 00-3, where 24 V coils are available, Form S (separate control) must be specified.
† These voltage codes must include Form S (supplied at N.C.).

How to Order:

To Order Specify:	Catalog Number			
• Class Number • Type Number • Coil Voltage Code • Form(s)	Class	Type	Coil Voltage Code	Form(s)
	8702	SCG8	VO2	P1S

Factory Modifications (FORMS)..... Refer to Catalog 9999CT9701
Application Data.....Page 33, 37
Dimensions.....Pages 34-36
Separate Enclosures (Class 9991)..... Refer to Catalog 9999CT9701
Replacement Parts (Class 9998)..... Refer to Catalog 9999CT9701
Type S Accessories (Class 9999)..... Refer to Catalog 9999CT9701

© 1998 Square D All Rights Reserved

Full Voltage Reversing Contactors — NEMA
Selection – Class 8702

600 Volts AC Maximum — 50-60 Hertz

NEMA Size	Continuous Current Ratings	Motor Volts	Max. HP	Type of Motor	* Coil Voltage	Open Type		NEMA Type 1 General Purpose Enclosure	NEMA Type 4 & 4X Watertight, Dusttight Brushed Stainless Steel Enclosure	NEMA Type 7 & 9 Hazardous Locations Class I, Groups C & D Class II, Groups E, F & G		NEMA Type 12 Dusttight & Driptight Industrial Use Enclosure
						Vertical Type	Horizontal Type	Type	Type	Bolted Type	SPIN TOP® Type	Type
2-Pole Single Phase												
00	9	115 230	⅓ 1	Single Phase 3-Wire	120 240	. . . . . .	SAO1V02 SAO1V03	SAG1V02 SAG1V03	Use Size 0	Use Size 0	Use Size 0	Use Size 0
0	18	115 230	1 2		120 240	SBO9V02 SBO9V03	SBO1V02 SBO1V03	SBG1V02 SBG1V03	SBW11V02 SBW11V03	SBT46V02 SBT46V03	SBR6V02 SBR6V03	SBA1V02 SBA1V03
1	27	115 230	2 3		120 240	SCO1V02 SCO1V03	SCO2V02 SCO2V03	SCG2V02 SCG2V03	SCW11V02 SCW11V03	SCT46V02 SCT46V03	SCR6V02 SCR6V03	SCA1V02 SCA1V03
3-Pole Single Phase												
00	9	115 230	⅓ 1	4-Wire Rep.-Ind.	120 240	. . . . . .	SAO2V02 SAO2V03	SAG2V02 SAG2V03	Use Size 0	Use Size 0	Use Size 0	Use Size 0
		115 230	⅓ 1	4-Wire Split Ph.	120 240	. . . . . .	SAO3V02 SAO3V03	SAG3V02 SAG3V03	Use Size 0	Use Size 0	Use Size 0	Use Size 0
0	18	115 230	1 2	4-Wire Rep.-Ind.	120 240	SBO10V02 SBO10V03	SBO2V02 SBO2V03	SBG2V02 SBG2V03	SBW12V02 SBW12V03	SBT47V02 SBT47V03	SBR7V02 SBR7V03	SBA2V02 SBA2V03
		115 230	1 2	4-Wire Split Ph.	120 240	SBO11V02 SBO11V03	SBO3V02 SBO3V03	SBG3V02 SBG3V03	SBW13V02 SBW13V03	SBT48V02 SBT48V03	SBR8V02 SBR8V03	SBA3V02 SBA3V03
1	27	115 230	2 3	4-Wire Rep.-Ind.	120 240	SCO3V02 SCO3V03	SCO4V02 SCO4V03	SCG4V02 SCG4V03	SCW12V02 SCW12V03	SCT47V02 SCT47V03	SCR7V02 SCR7V03	SCA2V02 SCA2V03
		115 230	2 3	4-Wire Split Ph.	120 240	SCO5V02 SCO5V03	SCO6V02 SCO6V03	SCG6V02 SCG6V03	SCW13V02 SCW13V03	SCT48V02 SCT48V03	SCR8V02 SCR8V03	SCA3V02 SCA3V03
4-Pole Polyphase												
0	18	Separate Control 200 230 460 575	 3 3 5 5	2 Phase 2 Wire	120 208 240 480 600	SBO13V02S SBO13V08 SBO13V03 SBO13V06 SBO13V07	SBO5V02S SBO5V08 SBO5V03 SBO5V06 SBO5V07	SBG5V02S SBG5V08 SBG5V03 SBG5V06 SBG5V07	SBW15V02S SBW15V08 SBW15V03 SBW15V06 SBW15V07	Consult Local Square D Field Office	SBR10V02S SBR10V08 SBR10V03 SBR10V06 SBR10V07	SBA5V02S SBA5V08 SBA5V03 SBA5V06 SBA5V07
1	27	Separate Control 200 230 460 575	 7½ 7½ 10 10		120 208 240 480 600	SCO9V02S SCO9V08 SCO9V03 SCO9V06 SCO9V07	SCO10V02S SCO10V08 SCO10V03 SCO10V06 SCO10V07	SCG10V02S SCG10V08 SCG10V03 SCG10V06 SCG10V07	SCW15V02S SCW15V08 SCW15V03 SCW15V06 SCW15V07	Consult Local Square D Field Office	SCR10V02S SCR10V08 SCR10V03 SCR10V06 SCR10V07	SCA5V02S SCA5V08 SCA5V03 SCA5V06 SCA5V07
2	45	Separate Control 200 230 460 575	 10 15 25 25		120 208 240 480 600	. . .	SDO4V02S SDO4V08 SDO4V03 SDO4V06 SDO4V07	SDG4V02S SDG4V08 SDG4V03 SDG4V06 SDG4V07	SDW12V02S SDW12V08 SDW12V03 SDW12V06 SDW12V07	Consult Local Square D Field Office	SDR4V02S SDR4V08 SDR4V03 SDR4V06 SDR4V07	SDA2V02S SDA2V08 SDA2V03 SDA2V06 SDA2V07
3	90	Separate Control 200 230 460 575	 25 30 50 50		120 208 240 480 600	. . .	SEO4V02S SEO4V08 SEO4V03 SEO4V06 SEO4V07	SEG4V02S SEG4V08 SEG4V03 SEG4V06 SEG4V07	SEW12V02S SEW12V08 SEW12V03 SEW12V06 SEW12V07	. . .	. . .	SEA2V02S SEA2V08 SEA2V03 SEA2V06 SEA2V07
4	135	Separate Control 200 230 460 575	 40 50 100 100		120 208 240 480 600	. . .	SFO4V02S SFO4V08 SFO4V03 SFO4V06 SFO4V07	SFG4V02S SFG4V08 SFG4V03 SFG4V06 SFG4V07	SFW12V02S SFW12V08 SFW12V03 SFW12V06 SFW12V07	. . .	. . .	SFA2V02S SFA2V08 SFA2V03 SFA2V06 SFA2V07

* Coil voltage code must be specified to order this product. Refer to standard coil voltage codes listed in selection table above or additional standard voltage codes below and insert as shown in the HOW TO ORDER block.

Coil Voltage Codes

Voltage		Code
60 Hz	50 Hz	
24▲	. . .	V01†
120	110	V02†
208	. . .	V08
240	220	V03
480	440	V06
600	550	V07
Specify	Specify	V99

▲ 24 V coils are not available on Sizes 4-7. On Sizes 00-3, where 24 V coils are available, Form S (separate control) must be specified.

† These voltage codes must include Form S (supplied at N.C.).

File E78351
CCN NLDX

File LR60905
Class 3211-04

How to Order:

To Order Specify:	Catalog Number			
	Class	Type	Coil Voltage Code	Form(s)
• Class Number • Type Number • Coil Voltage Code • Form(s)	8702	SCG2	VO2	P1S

Factory Modifications (FORMS) ..... Refer to Catalog 9999CT9701
Application Data ..... Page 33, 37
Dimensions ..... Pages 34-36
Separate Enclosures (Class 9991) ..... Refer to Catalog 9999CT9701
Replacement Parts (Class 9998) ..... Refer to Catalog 9999CT9701
Type S Accessories (Class 9999) ..... Refer to Catalog 9999CT9701

© 1998 Square D All Rights Reserved

12.00"

5.12"

SIEMENS

Indoor Load Center

Catalog Number	Series	Enclosure
G2020B1100	-	Type 1
G2020B1100CU	-	Type 1
G2020L1125	-	Type 1
G2020L1125CU	-	Type 1

RATINGS:
125A MAXIMUM - SEE MAIN BREAKER RATING IF USED.
BACK-FED BREAKER REQUIRES HOLD-DOWN KIT ECMBR2.
120/240 V~, 60 HZ, 1Ø 3W
208Y/120 V~, 60 HZ, 1Ø 3W

FOR INSTALLATION BY A QUALIFIED PERSON IN ACCORDANCE WITH ALL LOCAL ELECTRICAL CODES AND/OR THE NATIONAL ELECTRICAL CODE ®.

SUITABLE FOR USE AS SERVICE EQUIPMENT WHEN MAIN BREAKER IS INSTALLED. WHEN USED AS SERVICE EQUIPMENT, APPLY "SERVICE DISCONNECT" LABEL TO FRONT NEXT TO MAIN BREAKER HANDLE.

WHEN USED AS SERVICE EQUIPMENT, UNUSED NEUTRAL BAR TERMINALS MAY BE USED TO TERMINATE EQUIPMENT GROUNDING WIRES IN THE COMBINATIONS INDICATED FOR EQUIPMENT GROUND BAR TERMINALS.

IF THE NEUTRAL TIE STRAP IS REMOVED, LUG KIT ECLKB1 MUST BE INSTALLED AND BONDED. THE LEFT NEUTRAL BAR WILL BECOME THE EQUIPMENT GROUND.

TO RESET BREAKERS WITH TRIPPED HANDLE POSITION BETWEEN "ON" AND "OFF", MOVE HANDLE TO "OFF" THEN TO "ON".

Siemens Energy & Automation, Inc. Alpharetta, Georgia U.S.A. J2 4099517 Rev.E

IMPORTANT: DO NOT ALLOW PETROLEUM BASED (HYDROCARBON) SPRAYS, CHEMICALS, SOLVENTS OR ANY PAINT TO CONTACT INTERIOR COMPONENTS. PETROLEUM BASED CHEMICALS CAN CAUSE DEGRADATION OF ELECTRICAL INSULATING MATERIALS.

⚠ DANGER

Hazardous Voltage.
Will cause death, serious injury or substantial property damage.

Turn off power supplying this equipment before working inside.

⚠ PELIGRO

Voltaje peligroso. Causará la muerte, lesiones graves o daño substancial a la propiedad.

Desconecte el suministro de energía a este equipo antes de trabajar en su interior.

SHORT CIRCUIT CURRENT RATING

THIS PANELBOARD HAS A MAXIMUM SHORT CIRCUIT CURRENT RATING OF 100,000 AMPS RMS SYMMETRICAL, 120/240V~. THE ACTUAL RATING IS DEPENDENT ON THE BRANCH BREAKERS INSTALLED IN THIS PANELBOARD AND THE MAIN/FEEDER BREAKER, IF ANY, INSTALLED AHEAD OF THIS PANELBOARD. THE CORRECT MAIN BREAKER/FEEDER/MAIN BREAKER/PANELBOARD MAIN BREAKER/BRANCH BREAKER SERIES COMBINATIONS TO BE USED ARE LISTED IN THE TABULATION BELOW. ANY CIRCUIT BREAKER INSTALLED, REPLACED, OR ADDED IN THIS PANELBOARD MUST BE MANUFACTURED BY SIEMENS AND MUST BE OF THE CORRECT TYPE AS INDICATED IN THE TABULATION BELOW. USE OF OTHER CIRCUIT BREAKERS IN THIS EQUIPMENT WILL VOID THE WARRANTY.

MAIN BREAKER	FEEDER/MAIN BREAKER	PANELBOARD MAIN‡	BRANCH BREAKER	THEN THE MAX. SHORT CIRCUIT CURRENT RATING IN RMS SYMMETRICAL AMPS, 120/240 V~ IS
WHEN THE MAIN PROTECTING THE SYSTEM IS A	AND THE BREAKER PROTECTING THIS PANELBOARD IS A SIEMENS TYPE	AND THE INSTALLED MAIN BREAKER IN THIS PANELBOARD IS A SIEMENS TYPE	AND THE BRANCH BREAKERS INSTALLED ARE SIEMENS TYPE	
NONE USED OR SIEMENS BREAKER TYPES JXD2(-A), JD6(-A), JXD6(-A), HJD6(-A), HJXD6(-A), LD6(-A), LXD6(-A), HLD6(-A), HLXD6(-A), MD6, MXD6, HMD6, HMXD6, ND6, NXD6, HND6, HNXD6, PD6, PXD6, HPD6, HPXD6, RD6, RXD6, HRD6, HRXD6, OR CLASS J, T, R OR L FUSES	QP, BQ, BL	NONE USED, EQ8681, EQ8682 OR QP	QP, QG, QPH, HQP, QPF, QPHF, QFP, QE, QEH, QAF, QAFH	10,000
NONE USED	QPH, BQH, BLH	NONE USED OR EQ8681 OR EQ8682	QP, QPH, HQP, QPF, QPHF, QE, QEH, QAF, QAFH	22,000
NONE USED	NONE USED	EQ8681, EQ8682, QPH		
NONE USED	NONE USED	NONE USED	QPH, QEH, QPHF, QAFH	
SIEMENS BREAKER TYPES JXD2(-A), JD6(-A), JXD6(-A), HJD6(-A), HJXD6(-A), LD6(-A), LXD6(-A), HLD6(-A), HLXD6(-A), MD6, MXD6, HMD6, HMXD6, ND6, NXD6, HND6, HNXD6, PD6, PXD6, HPD6, HPXD6, RD6, RXD6, HRD6, HRXD6, OR CLASS J, T, R OR L FUSES	QPH, BQH, BLH, HQP, HBQ, HBL	NONE USED, EQ8681, EQ8682 OR HQP	QP, QPH, HQP, QPF, QPHF, QE, QEH, QAF, QAFH	65,000
SIEMENS BREAKER TYPE ED4, ED6	NONE USED OR QP, BQ, BL, QPH, BQH, BLH, HQP, HBQ, HBL			
NONE USED	HQP, HBQ, HBL			
	NONE USED	NONE USED	HQP	
SIEMENS BREAKER TYPES HED4, HED6, HFD6, HFXD6	NONE USED OR QP, BQ, BL, QPH, BQH, BLH, HQP, HBQ, HBL	NONE USED OR EQ8681 OR EQ8682	QP, QPH, HQP, QPF, QPHF, QE, QEH, QAF, QAFH	100,000
300V T FUSES - 200A MAX				
300V T FUSES - 600A MAX	QPH, BQH, BLH, HQP, HBQ, HBL			

SR125a

‡ THIS PANELBOARD IS A MAIN LUG DEVICE THAT MAY BE CONVERTED TO MAIN BREAKER WITH THE ADDITION OF FIELD INSTALLED MAIN BREAKER KIT OR A MAIN BREAKER DEVICE THAT MAY BE CONVERTED TO MAIN LUG WITH THE ADDITION OF MAIN LUGS. SEE ACCESSORY TABLE FOR CATALOG NUMBERS OF APPROPRIATE KITS.

REMOVE TWISTOUTS FROM TRIM ONLY WHERE BREAKERS WILL BE INSTALLED. ALL OPENINGS MUST BE FILLED WITH BREAKERS OR FILLER PLATES. USE ONE ECMBF125 FILLER PLATE TO FILL 100-125A MAIN BREAKER OPENING.

THIS LOAD CENTER IS INVERTIBLE FOR BOTTOM FEED APPLICATIONS.

MAIN LUG / MAIN BREAKER KITS	
USE APPROPRIATE KIT FROM CHART BELOW TO CONVERT PANEL	
DESCRIPTION	CAT. NO.
100 AMP MAIN BREAKER	MBK100A
125 AMP MAIN BREAKER	MBK125A
100-125 AMP MAIN LUG	ECMLK125

ACCESSORIES	
DESCRIPTION	CAT. NO.
DOOR LOCK	ECQFL2
FILLER PLATE, 1"	QF3
BREAKER HOLD-DOWN	ECMBR2
MAIN BREAKER FILLER PLATE	ECMBF125
BONDABLE GROUND LUG	ECLKB1
SUBFEED LUG KIT	ECLK2125
STANDBY PWR INTERLOCK KITS: ECSBPK01, ECSBPK02, ECSBPK04	

Assembled in Mexico

© 2005 Copyright Siemens Energy & Automation, Inc.
® The National Electrical Code is a registered trademark of the National Fire Protection Association.

USE COPPER OR ALUMINUM 60°/75°C WIRE

SEE BREAKER MARKINGS FOR WIRE SIZE AND TORQUE REQUIREMENTS.

TERMINALS	WIRE	TORQUE
A, B, N, G	2/0-4 AWG	110 LB-INS
NEUTRAL/GROUND BARS (USE TYPE GB GROUND BAR KIT ACCESSORY)	10-14 CU/10-12 AL 8 AWG 6-4 AWG	20 LB-INS 25 LB-INS 35 LB-INS
GROUND CONDUCTORS ONLY	(2)or(3) 14 AWG (2) 12-10 AWG	20 LB-INS 20 LB-INS
ECLK1-2 NEUTRAL LUG KIT	2/0-2 AWG	45 LB-INS
ECLK2 NEUTRAL LUG KIT	2/0-4 AWG	135 LB-INS
MAIN LUG/MAIN BRKR TO BUS CONNECTION (1/4-20 NUT)		45 LB-INS
BONDING SCREW		45 LB-INS

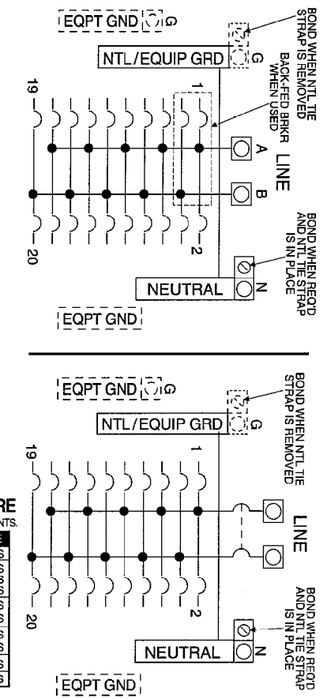

COLOR: PMS485 (RED)

PRINT COLOR: BLACK EXCEPT AS SHOWN

MATERIAL: FASSON UL LITHO 40FS-7305G (SPEC# 10254)

ALTERNATE MAT'L: 60# FASSON CRACK'N'PEEL PLUS, UNCOATED OFFSET, SUPER PERMANENT ADHESIVE WITH 83# LINER

DESIGN RESPONSIBILITY LOCATION:
SEA-NORCROSS

PRINT DISTRIBUTION
ECN COPIES MUST BE ISSUED TO ALL CHECKED LOCATIONS FOR APPROVAL PRIOR TO CHANGE

☐ SEA-TUC	☐ SEA-DRM	☐ McPHER
☐ SEA-NOR	☐ DUR-LEB	☐ CHOICE
☐ SEA-EL	☐ DUR-HOU	☐ IC-ASY
■ SEA-IT2	☐ SEA-BEL	☐ *

1st ARTICLE	EDR NO.	REV	DATE	DESCRIPTION	BY
	05-042-06	E	11/10/05	REVISE FOR TRANSFER TO ITESA2. TRANSFER DES. CONTROL TO NORCROSS.	KAM
	05-046-01	D	10/25/05	UPDATE AND ADD INTERLOCK ACCESS'Y	KAM
	01-080-10	C	6/20/02	ADD LKB1 ACCESSORY AND RELATED INFO	KAM
	01-080-08	B	3/22/02	ADD BACKFED BRKR INFO, 125A BREAKER INFO & OTHER MISC. CHANGES	KAM
	01-080-06	A	1/8/02	ISSUE	KAM

UNLESS OTHERWISE SPECIFIED DIMENSIONS ARE IN INCHES
TOLERANCES:
.XX ±.12
.XXX
HOLE DIAMETER ±.005
ANGULAR
UNDIMENSIONED 90° ANGLES ±0°30'

DWN	KAM	DATE	1/8/02
CHK	CDH	DATE	1/8/02
APVD	CDH	DATE	1/8/02

-CONFIDENTIAL- PROPERTY OF
Siemens Energy & Automation, Inc.
Residential Products Division

WIRING DIAGRAM

SIZE	ISSUE RELEASE NO.	DWG. NO.	REV
B	01-080-06	4099517	E

SCALE 1:1 | DO NOT SCALE DRAWING | SHEET 1 OF 1

3-Pole Polyphase—Three Thermal Units Required

NEMA Size	Continuous Current Ratings	Motor Volts	Max. HP	∗ Coil Voltage	Open Type		NEMA Type 1 General Purpose Enclosure	NEMA Type 4 & 4X Watertight, Dusttight Brushed Stainless Steel Enclosure (Size 0-5)♦	NEMA Type 7 & 9 Hazardous Locations Class I, Groups C & D Class II, Groups E, F & G		NEMA Type 12 Dusttight & Driptight Industrial Use Enclosure
					Vertical Type	Horizontal Type	Type	Type	Bolted Type	SPIN TOP® Type	Type
00	9	Separate Control†		120	. . .	SAO16V02S	SAG16V02S	Use Size 0	Use Size 0	Use Size 0	Use Size 0
		200	1½	208		SAO16V08	SAG16V08				
		230	1½	240		SAO16V03	SAG16V03				
		460	2	480		SAO16V06	SAG16V06				
		575	2	600		SAO16V07	SAG16V07				
0	18	Separate Control†		120	SBO10V02S	SBO4V02S	SBG4V02S	SBW14V02S	SBT49V02S	SBR9V02S	SBA4V02S
		200	3	208	SBO10V08	SBO4V08	SBG4V08	SBW14V08	SBT49V08	SBR9V08	SBA4V08
		230	3	240	SBO10V03	SBO4V03	SBG4V03	SBW14V03	SBT49V03	SBR9V03	SBA4V03
		460	5	480	SBO10V06	SBO4V06	SBG4V06	SBW14V06	SBT49V06	SBR9V06	SBA4V06
		575	5	600	SBO10V07	SBO4V07	SBG4V07	SBW14V07	SBT49V07	SBR9V07	SBA4V07
1	27	Separate Control†		120	SCO7V02S	SCO8V02S	SCG8V02S	SCW14V02S	SCT49V02S	SCR9V02S	SCA4V02S
		200	7½	208	SCO7V08	SCO8V08	SCG8V08	SCW14V08	SCT49V08	SCR9V08	SCA4V08
		230	7½	240	SCO7V03	SCO8V03	SCG8V03	SCW14V03	SCT49V03	SCR9V03	SCA4V03
		460	10	480	SCO7V06	SCO8V06	SCG8V06	SCW14V06	SCT49V06	SCR9V06	SCA4V06
		575	10	600	SCO7V07	SCO8V07	SCG8V07	SCW14V07	SCT49V07	SCR9V07	SCA4V07
2	45	Separate Control†		120	SDO1V02S	SDO2V02S	SDG2V02S	SDW11V02S	SDT43V02S	SDR3V02S	SDA1V02S
		200	10	208	SDO1V08	SDO2V08	SDG2V08	SDW11V08	SDT43V08	SDR3V08	SDA1V08
		230	15	240	SDO1V03	SDO2V03	SDG2V03	SDW11V03	SDT43V03	SDR3V03	SDA1V03
		460	25	480	SDO1V06	SDO2V06	SDG2V06	SDW11V06	SDT43V06	SDR3V06	SDA1V06
		575	25	600	SDO1V07	SDO2V07	SDG2V07	SDW11V07	SDT43V07	SDR3V07	SDA1V07
3	90	Separate Control†		120	SEO1V02S	SEO2V02S	SEG2V02S	SEW11V02S	SET43V02S	SER3V02S	SEA1V02S
		200	25	208	SEO1V08	SEO2V08	SEG2V08	SEW11V08	SET43V08	SER3V08	SEA1V08
		230	30	240	SEO1V03	SEO2V03	SEG2V03	SEW11V03	SET43V03	SER3V03	SEA1V03
		460	50	480	SEO1V06	SEO2V06	SEG2V06	SEW11V06	SET43V06	SER3V06	SEA1V06
		575	50	600	SEO1V07	SEO2V07	SEG2V07	SEW11V07	SET43V07	SER3V07	SEA1V07
4	135	Separate Control†		120	SFO1V02S	SFO3V02S	SFG3V02S	SFW11V02S	. . .	. . .	SFA1V02S
		200	40	208	SFO1V08	SFO3V08	SFG3V08	SFW11V08			SFA1V08
		230	50	240	SFO1V03	SFO3V03	SFG3V03	SFW11V03			SFA1V03
		460	100	480	SFO1V06	SFO3V06	SFG3V06	SFW11V06			SFA1V06
		575	100	600	SFO1V07	SFO3V07	SFG3V07	SFW11V07			SFA1V07
5	270	Separate Control†		120	SGO1V02S	SGO3V02S	SGG3V02S	SGW11V02S	. . .	. . .	SGA1V02S
		200	75	208	SGO1V08	SGO3V08	SGG3V08	SGW11V08			SGA1V08
		230	100	240	SGO1V03	SGO3V03	SGG3V03	SGW11V03			SGA1V03
		460	200	480	SGO1V06	SGO3V06	SGG3V06	SGW11V06			SGA1V06
		575	200	600	SGO1V07	SGO3V07	SGG3V07	SGW11V07			SGA1V07
6	540	Separate Control†		120	. . .	SHO1V02S	SHG1V02S	SHW1V02S	. . .	. . .	SHA1V02S
		200	150	208		SHO1V08	SHG1V08	SHW1V08			SHA1V08
		230	200	240		SHO1V03	SHG1V03	SHW1V03			SHA1V03
		460	400	480		SHO1V06	SHG1V06	SHW1V06			SHA1V06
		575	400	600		SHO1V07	SHG1V07	SHW1V07			SHA1V07
7	810	Separate Control†		120	. . .	SJO1V02S	SJG1V02S	SJW1V02S	. . .	. . .	SJA1V02S
		200	—	208		SJO1V08	SJG1V08	SJW1V08			SJA1V08
		230	300	240		SJO1V03	SJG1V03	SJW1V03			SJA1V03
		460	600	480		SJO1V06	SJG1V06	SJW1V06			SJA1V06
		575	600	600		SJO1V07	SJG1V07	SJW1V07			SJA1V07

♦ Size 6 and 7 are sheet steel rated NEMA Type 4 only.

† 120 Volt Polyphase starters are wired for separate control.

∗ Coil voltage code must be specified to order this product. Refer to standard coil voltage codes listed in selection table above or additional standard voltage codes below and insert as shown in the HOW TO ORDER block.

Coil Voltage Codes

Voltage		Code
60 Hz	50 Hz	
24▲	. . .	V01
120	110	V02
208	. . .	V08
240	220	V03
480	440	V06
600	550	V07
Specify	Specify	V99

▲ 24 V coils are not available on Sizes 4-7. On Sizes 00-3, where 24 V coils are available, Form S (separate control) must be specified.

How to Order:

To Order Specify:	*Catalog Number*			
• Class Number • Type Number • Coil Voltage Code • Form(s)	Class	Type	Coil Voltage Code	Form(s)
	8736	SCG8	VO2	P1S

Factory Modifications (FORMS)..... Refer to Catalog 9999CT9701
Application Data.....Page 33, 37
Dimensions.....Pages 34-36
Separate Enclosures (Class 9991)..... Refer to Catalog 9999CT9701
Replacement Parts (Class 9998)..... Refer to Catalog 9999CT9701
Type S Accessories (Class 9999)..... Refer to Catalog 9999CT9701

© 1998 Square D All Rights Reserved

Full Voltage Reversing Starters — NEMA
Selection – Class 8736

600 Volts AC Maximum — 50-60 Hertz

NEMA Size	Continuous Current Ratings	Motor Volts	Max. HP	Type of Motor	* Coil Voltage	Open Type		NEMA Type 1 General Purpose Enclosure	NEMA Type 4 & 4X Watertight, Dusttight Brushed Stainless Steel Enclosure	NEMA Type 7 & 9 Hazardous Locations Class I, Groups C & D Class II, Groups E, F & G		NEMA Type 12 Dusttight & Driptight Industrial Use Enclosure
						Vertical Type	Horizontal Type	Type	Type	Bolted Type	SPIN TOP® Type	Type
2-Pole Single Phase — 1 Thermal Unit Required												
00	9	115 230	⅓ 1	Single Phase 3-Wire	120 240	. . . . . .	SAO13V02 SAO13V08	SAG13V02 SAG13V08	Use Size 0	Use Size 0	Use Size 0	Use Size 0
0	18	115 230	1 2		120 240	SBO7V02 SBO7V08	SBO1V02 SBO1V08	SBG1V02 SBG1V08	SBW11V02 SBW11V08	SBT46V02 SBT46V08	SBR6V02 SBR6V08	SBA1V02 SBA1V08
1	27	115 230	2 3		120 240	SCO1V02 SCO1V08	SCO2V02 SCO2V08	SCG2V02 SCG2V08	SCW11V02 SCW11V08	SCT46V02 SCT46V08	SCR6V02 SCR6V08	SCA1V02 SCA1V08
3-Pole Single Phase — 1 Thermal Unit Required												
00	9	115 230	⅓ 1	4-Wire Rep.-Ind.	120 240	. . . . . .	SAO14V02 SAO14V08	SAG14V02 SAG14V08	Use Size 0	Use Size 0	Use Size 0	Use Size 0
		115 230	⅓ 1	4-Wire Split Ph.	120 240	. . . . . .	SAO15V02 SAO15V08	SAG15V02 SAG15V08	Use Size 0	Use Size 0	Use Size 0	Use Size 0
0	18	115 230	1 2	4-Wire Rep.-Ind.	120 240	SBO80V02 SBO8V08	SBO2V02 SBO2V08	SBG2V02 SBG2V08	SBW12V02 SBW12V08	SBT47V02 SBT47V08	SBR7V02 SBR7V08	SBA2V02 SBA2V08
		115 230	1 2	4-Wire Split Ph.	120 240	SBO9V02 SBO9V08	SBO3V02 SBO3V08	SBG3V02 SBG3V08	SBW13V02 SBW13V08	SBT48V02 SBT48V08	SBR8V02 SBR8V08	SBA3V02 SBA3V08
1	27	115 230	2 3	4-Wire Rep.-Ind.	120 240	SCO3V02 SCO3V08	SCO4V02 SCO4V08	SCG4V02 SCG4V08	SCW12V02 SCW12V08	SCT47V02 SCT47V08	SCR7V02 SCR7V08	SCA2V02 SCA2V08
		115 230	2 3	4-Wire Split Ph.	120 240	SCO5V02 SCO5V08	SCO6V02 SCO6V08	SCG6V02 SCG6V08	SCW13V02 SCW13V08	SCT48V02 SCT48V08	SCR8V02 SCR8V08	SCA3V02 SCA3V08
4-Pole Polyphase — 2 Thermal Units Required												
0	18	Separate Control†		2 Phase 2 Wire	120	SBO11V02S	SBO5V02S	SBG5V02S	SBW15V02S	Consult Local Square D Field Office	SBR10V02S	SBA5V02S
		200	3		208	SBO11V08	SBO5V08	SBG5V08	SBW15V08		SBR10V08	SBA5V08
		230	3		240	SBO11V03	SBO5V03	SBG5V03	SBW15V03		SBR10V03	SBA5V03
		460	5		480	SBO11V06	SBO5V06	SBG5V06	SBW15V06		SBR10V06	SBA5V06
		575	5		600	SBO11V07	SBO5V07	SBG5V07	SBW15V07		SBR10V07	SBA5V07
1	27	Separate Control†			120	SCO9V02S	SCO10V02S	SCG10V02S	SCW15V02S	Consult Local Square D Field Office	SCR10V02S	SCA5V02S
		200	7½		208	SCO9V08	SCO10V08	SCG10V08	SCW15V08		SCR10V08	SCA5V08
		230	7½		240	SCO9V03	SCO10V03	SCG10V03	SCW15V03		SCR10V03	SCA5V03
		460	10		480	SCO9V06	SCO10V06	SCG10V06	SCW15V06		SCR10V06	SCA5V06
		575	10		600	SCO9V07	SCO10V07	SCG10V07	SCW15V07		SCR10V07	SCA5V07
2	45	Separate Control†			120	. . .	SDO4V02S	SDG4V02S	SDW12V02S	Consult Local Square D Field Office	SDR4V02S	SDA2V02S
		200	10		208		SDO4V08	SDG4V08	SDW12V08		SDR4V08	SDA2V08
		230	15		240		SDO4V03	SDG4V03	SDW12V03		SDR4V03	SDA2V03
		460	25		480		SDO4V06	SDG4V06	SDW12V06		SDR4V06	SDA2V06
		575	25		600		SDO4V07	SDG4V07	SDW12V07		SDR4V07	SDA2V07
3	90	Separate Control†			120	. . .	SEO4V02S	SEG4V02S	SEW12V02S	. . .	. . .	SEA2V02S
		200	25		208		SEO4V08	SEG4V08	SEW12V08			SEA2V08
		230	30		240		SEO4V03	SEG4V03	SEW12V03			SEA2V03
		460	50		480		SEO4V06	SEG4V06	SEW12V06			SEA2V06
		575	50		600		SEO4V07	SEG4V07	SEW12V07			SEA2V07
4	135	Separate Control†			120	. . .	SFO4V02S	SFG4V02S	SFW12V02S	. . .	. . .	SFA2V02S
		200	40		208		SFO4V08	SFG4V08	SFW12V08			SFA2V08
		230	50		240		SFO4V03	SFG4V03	SFW12V03			SFA2V03
		460	100		480		SFO4V06	SFG4V06	SFW12V06			SFA2V06
		575	100		600		SFO4V07	SFG4V07	SFW12V07			SFA2V07

† 120 Volt starters are wired for separate control.

* Coil voltage code must be specified to order this product. Refer to standard coil voltage codes listed in selection table above or additional standard voltage codes below and insert as shown in the HOW TO ORDER block.

Coil Voltage Codes

Voltage		Code
60 Hz	50 Hz	
24▲	. . .	V01
120	110	V02
208	. . .	V08
240	220	V03
480	440	V06
600	550	V07
Specify	Specify	V99

▲ 24 V coils are not available on Sizes 4-7. On Sizes 00-3, where 24 V coils are available, Form S (separate control) must be specified.

File E78351
CCN NLDX

File LR60905
Class 3211-04

How to Order:

To Order Specify:	Catalog Number			
• Class Number • Type Number • Coil Voltage Code • Form(s)	Class	Type	Coil Voltage Code	Form(s)
	8736	SCG8	VO2	P1S

Factory Modifications (FORMS) ..... Refer to Catalog 9999CT9701
Application Data ..... Page 33, 37
Dimensions ..... Pages 34-36
Separate Enclosures (Class 9991) ..... Refer to Catalog 9999CT9701
Replacement Parts (Class 9998) ..... Refer to Catalog 9999CT9701
Type S Accessories (Class 9999) ..... Refer to Catalog 9999CT9701

© 1998 Square D All Rights Reserved

Power Contact Ratings

All contactors are rated in accordance with NEMA standards. The ratings shown in the tables on Pages 29-32 are for normal service. For complete data on power contact ratings, refer to Class 8536 Section.

Maintenance of Equipment

Class 9998 repair parts kits are available for all Class 8702 contactors and Class 8736 starters. Service bulletins with a complete list of replaceable parts are supplied with all devices. See Page 15.

Control Transformer Selection

The following table gives the proper size control transformer to be used with a given reversing device, with or without additional auxiliary contacts or timer. For factory addition of control transformers, see Factory Modifications (Forms) section.

NEMA Size	Type	No. of Poles	Transformers Class 9070 Type
0, 1 & 2	SB, SC & SD	Any	T100 or GO2
3	SE	3	T1500 or GO3
		4 & 5	T300
4	SF	Any	T300
5	SG	Any	T500
6 & 7	SH & SJ	Any	See Page 16

Auxiliary Units

The table below shows the maximum number of auxiliary units **(in addition to the holding circuit and interlocking contacts)** that can be added to either the forward or reverse contactor or starter.

NEMA Size (Type)	No. of Poles of Basic Contactor	Maximum number of auxiliary units on each contactor, forward or reverse, (in addition to internal holding circuit and interlocking contacts).
00 (SA)	2 or 3	2 single circuit auxiliary contacts (N.O. or N.C.)
0, 1 & 2 (SB, SC & SD)	2 or 3	4 single circuit auxiliary contacts▲ (N.O. or N.C.)
		1 single circuit auxiliary contact (N.O. or N.C.) plus 1 attached timer (ON or OFF delay).
	4	2 single circuit auxiliary contacts (N.O. or N.C.)
3, 4, 5, 6, & 7 (SE, SF, SG, SH, & SJ)	Any	2 single circuit auxiliary contacts (N.O. or N.C.)
		1 single circuit auxiliary contact plus 1 attached timer (ON or OFF delay).

▲ When adding 4 external auxiliary contacts to one Size 0 or 1 contactor, remove one of the return springs.

Factory Installed Auxiliary Contacts

Additional auxiliary contacts may be factory or field added to any Type 3 contactor or starter. See table above for maximum number of auxiliary units. The table below lists the Form designations for factory installed auxiliary contacts. See Class 9999 for field modification kits.

Example: X 1 O 1 O

- O — Number of N.C. auxiliary contacts on right hand (Reverse) contactor.
- 1 — Number of N.O. auxiliary contacts on right hand (Reverse) contactor.
- O — Number of N.C. auxiliary contacts on left hand (Forward) contactor.
- 1 — Number of N.O. auxiliary contacts on left hand (Forward) contactor.
- X — Basic Form Designation.

		Additional Auxiliary Contacts on R.H. Contactor (Reverse Contactor)					
		Standard (No Additional Auxiliary Contacts)	1 N.O.	1 N.C.	2 N.O.	1 N.O.-1 N.C.	2 N.C.
Additional Auxiliary Contacts on L.H. Contactor (Forward Contactor)	Standard (No Additional Auxiliary Contacts)		X0010	X0001	X0020	X0011	X0002
	1 N.O.	X1000	X1010	X1001	X1020	X1011	X1002
	1 N.C.	X0100	X0110	X0101	X0120	X0111	X0102
	2 N.O.	X2000	X2010	X2001	X2020	X2011	X2002
	1 N.O.-1 N.C.	X1100	X1110	X1101	X1120	X1111	X1102
	2 N.C.	X0200	X0210	X0201	X0220	X0211	X0202

© 1998 Square D All Rights Reserved

Full Voltage Reversing Contactors and Starters — NEMA
Approximate Dimensions – Class 8702, 8736

Open Type — 2 or 3-Pole Only

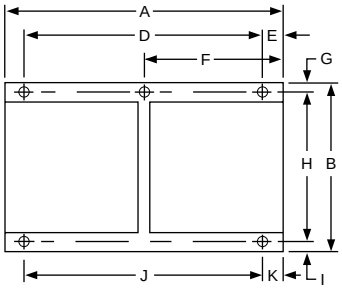

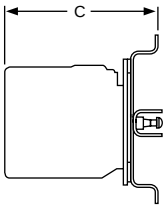

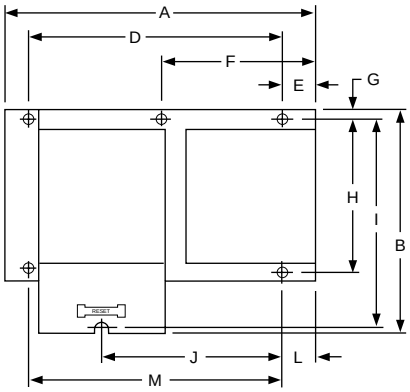

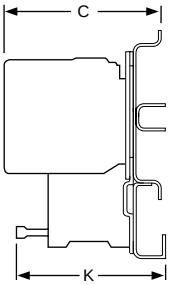

Class	NEMA Size	Type	Mounting	Figure Number	Dimensions — Inches/mm													Weight (Lbs)
					A	B	C	D	E	F	G	H	I	J	K	L	M	
8702	00	SAO	Horizontal	1	**7.13** 181	**5.00** 127	**5.31** 135	. . .	. . .	**3.41** 87	**.47** 12	**4.34** 110	**.19** 5	**5.50** 140	**.91** 23	. . .	. . .	12
	0	SBO	Horizontal	1	**7.13** 181	**5.00** 127	**5.31** 135	. . .	. . .	**3.41** 87	**.47** 12	**4.34** 110	**.19** 5	**5.50** 140	**.91** 23	. . .	. . .	12
	1	SCO	Vertical	1∗	**5.41** 137	**9.22** 234	**5.31** 135	**5.03** 128	**.22** 6	. . .	**.61** 15	**8.00** 203	**.61** 15	**5.03** 128	**.22** 6	. . .	. . .	12
	2	SDO	Horizontal	1	**9.00** 229	**6.88** 175	**6.03** 153	. . .	. . .	**4.50** 114	**.38** 10	**5.63** 143	**.25** 6	**6.00** 152	**1.50** 38	. . .	. . .	16
			Vertical	1∗	**6.75** 171	**11.38** 289	**6.03** 153	**6.25** 159	**.25** 6	. . .	**.50** 13	**10.38** 264	**.50** 13	**6.25** 159	**.25** 6	. . .	. . .	16
	3	SEO	Horizontal	1	**12.72** 323	**7.97** 202	**7.00** 178	**11.75** 298	**.48** 12	. . .	**.48** 12	**7.00** 178	**.48** 12	**11.75** 298	**.48** 12	. . .	. . .	35
			Vertical	1∗	**7.20** 183	**19.00** 483	**7.00** 178	**6.25** 159	**.48** 12	. . .	**1.02** 26	**17.00** 432	**.98** 25	**6.25** 159	**.48** 12	. . .	. . .	35
	4	SFO	Horizontal	1	**14.25** 362	**11.69** 297	**7.00** 178	**13.25** 337	**.50** 13	. . .	**.50** 13	**8.00** 203	**1.84** 47	**13.25** 337	**.50** 13	. . .	. . .	45
			Vertical	1∗	**7.97** 202	**23.91** 607	**7.00** 178	**7.00** 178	**.48** 12	. . .	**1.81** 46	**20.25** 514	**1.19** 30	**7.00** 178	**.48** 12	. . .	. . .	45
	5	SGO	Horizontal	1	**19.31** 490	**16.19** 411	**9.38** 238	**18.00** 457	**.66** 17	. . .	**1.03** 26	**14.00** 356	**1.16** 29	**18.00** 457	**.66** 17	. . .	. . .	98
			Vertical	1∗	**10.75** 273	**34.41** 874	**9.38** 238	**9.50** 241	**.63** 16	. . .	**1.25** 32	**32.00** 813	**1.16** 29	**9.50** 241	**.63** 16	. . .	. . .	98
	6	SHO	Horizontal	1	**22.38** 568	**28.05** 712	**9.52** 242	**18.00** 457	**.77** 20	. . .	**3.83** 97	**21.19** 538	**3.03** 77	**18.00** 457	**.77** 20	. . .	. . .	195
	7	SJO	Horizontal	1	**24.25** 616	**37.25** 946	**13.81** 351	**19.75** 502	**1.52** 39	. . .	. . .	**30.00** 762	. . .	. . .	. . .	. . .	. . .	310
8736	00	SAO	Horizontal	2	**7.13** 181	**6.91** 176	**5.31** 135	. . .	. . .	**3.41** 87	**.47** 12	**4.34** 110	**6.22** 158	**4.53** 115	**5.06** 129	**.66** 17	. . .	13
	0	SBO	Horizontal	2	**7.13** 181	**6.91** 176	**5.31** 135	. . .	. . .	**3.41** 87	**.47** 12	**4.34** 110	**6.22** 158	**4.53** 115	**5.06** 129	**.66** 17	. . .	13
	1	SCO	Vertical	2∗	**5.41** 137	**11.52** 293	**5.31** 135	**5.03** 128	**.22** 6	. . .	**.61** 15	**8.00** 203	**10.70** 272	**2.52** 64	**5.06** 129	**.22** 6	**5.03** 128	13
	2	SDO	Horizontal	2	**9.00** 229	**8.50** 216	**6.03** 153	. . .	. . .	**4.50** 114	**.38** 10	**5.63** 143	**7.50** 191	**5.00** 127	**5.16** 131	**1.50** 38	. . .	18
			Vertical	2∗	**6.75** 171	**13.48** 342	**6.03** 153	**6.25** 159	**.25** 6	. . .	**.78** 20	**10.38** 264	**12.97** 329	**3.13** 80	**5.16** 131	**.25** 6	**6.00** 152	18
	3	SEO	Horizontal	2	**12.72** 323	**11.72** 298	**7.00** 178	**11.75** 298	**.48** 12	. . .	**.48** 12	**10.75** 273	**10.75** 273	**11.75** 298	**6.25** 159	**.48** 12	**11.75** 298	38
			Vertical	2∗	**7.31** 186	**22.25** 565	**7.00** 178	**6.25** 159	**.48** 12	. . .	**1.02** 26	**20.75** 527	. . .	**6.25** 159	**6.25** 159	**.48** 12	**6.25** 159	38
	4	SFO	Horizontal	2	**14.25** 362	**14.59** 371	**7.00** 178	**13.25** 337	**.50** 13	. . .	**1.84** 47	**12.25** 311	**12.25** 311	**13.25** 337	**6.25** 159	**.50** 13	**13.25** 337	48
			Vertical	2∗	**7.97** 202	**26.81** 681	**7.00** 178	**7.00** 178	**.48** 12	. . .	**1.84** 47	**24.50** 622	. . .	**4.05** 103	**6.25** 159	**.48** 12	**7.00** 178	48
	5	SGO	Horizontal	2	**19.31** 490	**20.91** 531	**9.38** 238	**18.00** 457	**.66** 17	. . .	**1.28** 33	**19.00** 483	**19.00** 483	**18.00** 457	**6.63** 168	**.63** 16	**18.00** 457	115
			Vertical	2∗	**10.75** 273	**39.16** 995	**9.38** 238	**9.50** 241	**.66** 17	. . .	**1.28** 33	**37.25** 946	**37.25** 946	**9.50** 241	**6.63** 168	**.63** 16	**9.50** 241	115
	6	SHO	Horizontal	2	**22.38** 568	**28.05** 712	**9.52** 242	**18.00** 457	**.77** 20	. . .	**3.83** 97	**21.19** 538	**3.03** 77	**18.00** 457	**.77** 20	. . .	. . .	200
	7	SJO	Horizontal	1	**24.25** 616	**37.25** 946	**13.81** 351	**19.75** 502	**1.52** 39	. . .	. . .	**30.00** 762	. . .	. . .	. . .	. . .	. . .	315

∗ Vertical type design differs from that shown on the corresponding NEMA size horizontal figure, but dimensions listed apply to that figure.

© 1998 Square D All Rights Reserved

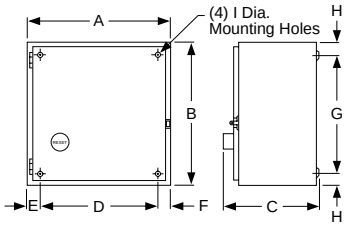

Figure 4

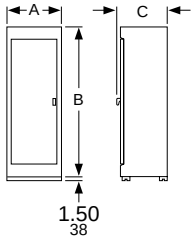

Figure 5

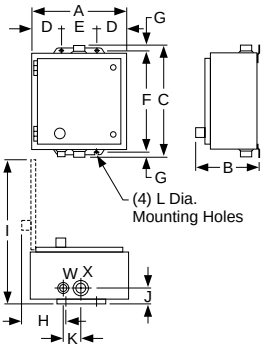

Figure 6

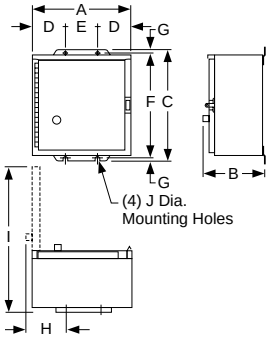

Figure 7

NEMA Type 1

NEMA Size	Class No.	Fig. No.	Dimensions — Inches/mm																				Wt (Lbs)	
			A		B		C				D		E		F		G		H		I		8702	8736
							8702		8736															
			IN	mm	IN	mm	IN	mm	IN	mm	IN	mm	IN	mm	IN	mm	IN	mm	IN	mm	IN	mm		
00, 0† 1†	8702 & 8736	4	11.88	302	11.88	302	7.41	188	7.53	191	9.75	248	1.06	27	1.06	27	9.75	248	1.06	27	.31	8	16	17
2†	8702 & 8736	4	14.88	378	14.13	359	7.56	192	7.66	195	12.75	324	1.06	27	1.06	27	12.00	305	1.06	27	.31	8	24	25
3∗ 4∗	8702 & 8736	4	18.16	461	29.16	741	9.25	235	9.25	235	15.50	394	1.33	34	1.33	34	26.50	673	1.33	34	.44	11	95	98
5	8702 & 8736	4	35.22	895	46.22	1174	12.81	325	12.93	328	31.00	787	2.11	54	2.11	54	42.00	1067	2.11	54	.56	14	298	315
6	8702 & 8736	5	36.22	920	62.22	1580	19.47	495	19.47	495	Floor Mounting												400	405
7	8702 & 8736	5	34.50	876	93.00	2362	23.50	597	23.50	597													. . .	. . .

† Standard enclosure has space for a fused control transformer, Form F4T, on Sizes 0-2, except for Size 0 & 1 4-Pole.
∗ 3-Pole only.

NEMA Type 4 & 4X – Stainless Steel▲

NEMA Size	Class Number	Fig. No.	Dimensions — Inches/mm												Hub Dia.		Weight (Lbs)	
			A	B	C	D	E	F	G	H	I	J	K	L	W Bot. Only	X Top & Bot.	8702	8736
0† 1†	8702 & 8736	6	**12.63** 321	**7.81** 198	**14.69** 373	**2.56** 65	**7.50** 191	**13.50** 343	**.59** 15	**3.88** 99	**18.41** 468	**1.66** 42	**2.31** 59	**.31** 8	¾	1	25	26
2†	8702 & 8736	6	**14.88** 378	**8.25** 210	**15.75** 400	**12.56** 319	**9.75** 248	**15.00** 381	**.38** 10	**3.88** 99	**20.88** 530	**1.72** 44	**2.63** 67	**.31** 8	¾	1½	33	35
3∗ 4∗	8702	6	**18.16** 461	**8.75** 222	**32.22** 818	**3.08** 78	**12.00** 305	**30.50** 775	**.88** 22	**3.69** 94	**26.72** 679	**2.56** 65	**3.19** 81	**.44** 11	¾	2½	96	. . .
	8736	6	**18.16** 461	**9.56** 243	**32.22** 818	**3.08** 78	**12.00** 305	**30.50** 775	**.88** 22	**4.50** 114	**26.72** 679	**2.56** 65	**3.19** 81	**.44** 11	¾	2½	. . .	99
5	8702	6	**35.22** 895	**12.13** 308	**49.22** 1250	**4.11** 104	**27.00** 686	**48.00** 1219	**.63** 16	**4.59** 117	**45.81** 1164	**2.97** 75	**3.50** 89	**.56** 14	¾	3½	300	. . .
	8736	6	**35.22** 895	**12.94** 329	**49.22** 1250	**4.11** 104	**27.00** 686	**48.00** 1219	**.63** 16	**5.41** 137	**45.81** 1164	**2.97** 75	**3.50** 89	**.56** 14	¾	3½	. . .	317
6	8702 & 8736	5	**36.22** 920	**70.13** 1781	**19.47** 495	Floor Mounting											500	505
7	8702 & 8736	5	**34.50** 876	**101.00** 2565	**23.50** 597												. . .	. . .

† Standard enclosure has space for a fused control transformer, Form F4T, on Sizes 0-2, except for Size 0 & 1 4-Pole devices.
∗ 3-Pole only.
▲ Size 6 & 7 are sheet steel enclosures and are rated NEMA Type 4 only.

NEMA Type 12

NEMA Size	Class Number	Fig. No.	Dimensions — Inches/mm																				Wt (Lbs)	
			A		B		C		D		E		F		G		H		I		J		8702	8736
			IN	mm	IN	mm	IN	mm	IN	mm	IN	mm	IN	mm	IN	mm	IN	mm	IN	mm	IN	mm		
0† 1†	8702 & 8736	7	11.88	302	7.75	197	13.75	349	2.56	65	6.75	171	12.75	324	.50	13	3.66	93	18.13	461	.31	8	23	24
2†	8702 & 8736	7	14.88	378	7.88	200	16.00	406	2.56	65	9.75	248	15.00	381	.50	13	3.66	93	21.25	540	.31	8	31	32
3∗	8702	7	18.16	461	9.25	235	31.50	800	3.08	78	12.00	305	30.50	775	.50	13	3.69	93	26.72	679	.44	11	96	. . .
4∗	8736	7	18.16	461	9.56	243	31.50	800	3.08	78	12.00	305	30.50	775	.50	13	4.50	114	26.72	679	.44	11	. . .	99
5	8702	7	35.22	895	13.13	334	49.00	1245	4.13	105	27.00	686	48.00	1219	.50	13	5.31	135	45.88	1165	.56	14	302	. . .
	8736	7	35.22	895	13.94	354	49.00	1245	4.13	105	27.00	686	48.00	1219	.50	13	6.13	156	45.88	1165	.56	14	. . .	319
6	8702 & 8736	5	36.22	920	62.22	1580	19.47	495	Floor Mounting														490	495
7	8702 & 8736	5	34.50	876	93.00	2362	23.50	597															. . .	. . .

† Standard enclosure has space for a fused control transformer, Form F4T, on Sizes 0-2, except for Size 0 & 1 4-Pole devices.
∗ 3-Pole only.

© 1998 Square D All Rights Reserved

Full Voltage Reversing Contactors and Starters — NEMA
Approximate Dimensions – Class 8702, 8736

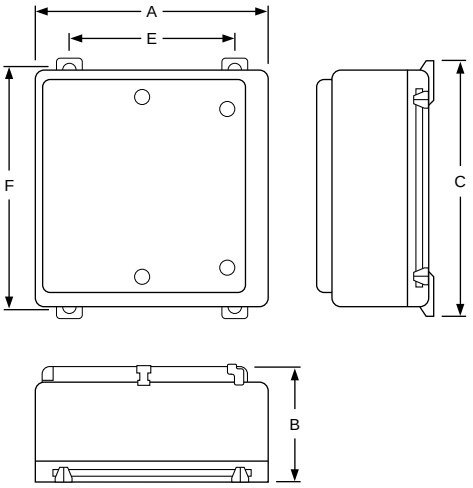

NEMA Type 4X — Watertight and Corrosion Resistant Glass Polyester Enclosure

NEMA Size	Class	Type	No. of Poles	Fig.	A		B		C		E		F	
					IN	mm	IN	mm	IN	mm	IN	mm	IN	mm
0-2	8702/36	SBW SCW SDW	All		16.88	429	9.78	248	22.75	578	10.13	257	21.50	546
0-2∗	8702/36	SBW SCW SDW	All		24.63	626	11.94	303	27.00	686	17.88	454	25.75	654
3-4	8702/36	SEW SPW	All		25.81	656	11.94	303	33.50	851	18.50	470	32.25	819
3-4∗	8702/36	SEW SPW	All		32.00	813	12.13	308	39.31	998	23.88	607	38.13	969

∗ With control power transformer (Form F4T)

Figure 7

NEMA Type 7 & 9 Bolted Enclosure — Figure 8

NEMA Size	Type	Dimensions — Inches/mm■																		Wt (Lbs)
		G		H		J		K		L		N		P		Q, R		S, T, U, V		
		IN	mm	IN	mm	IN	mm	IN	mm	IN	mm	IN	mm	IN	mm	IN	mm	IN	mm	
0-2	SBT SCT SDT	14.25	362	27.63	702	9.50	241	12.25	311	19.25	489	9.63	245	11.50	292	2.38	60	3.13	80	115
3-4∗	SET SFT	24.50	622	45.63	1159	13.75	349	22.50	572	27.50	699	13.75	349	15.38	391	3.44	87	4.00	102	180

■ Dimensions shown for 2 or 3-Pole devices only.

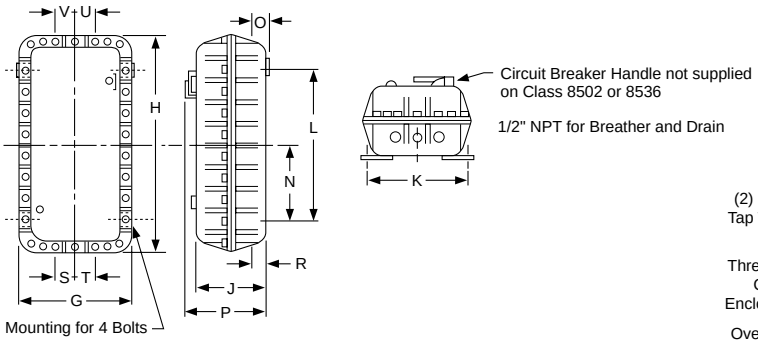

Figure 8

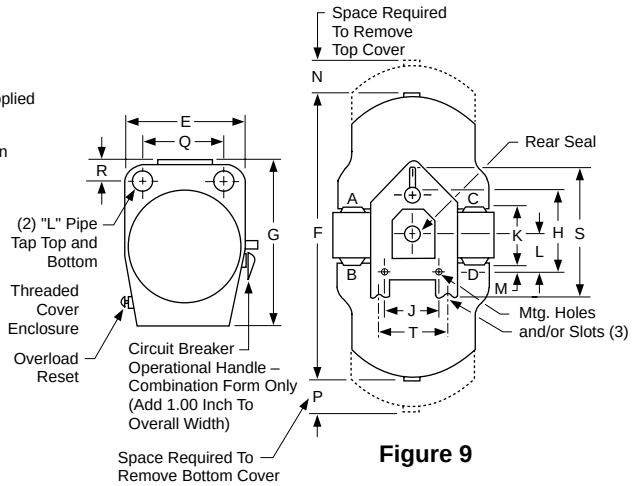

Figure 9

NEMA 7 & 9 SPIN TOP® Enclosure — Figure 9

NEMA Size	Type	Dimensions — Inches/mm																					Wt (Lbs)
		A	B∗	B†	C∗	C†	D	E∗	E†	F	G∗	G†	H∗	H†	J∗	J†	K	L	M	N	P	R	
0-1	SBR SCR	**12.00** 305	**41.06** 1043	**46.13** 1172	**68.06** 1729	**79.13** 2010	**16.75** 425	**7.25** 184	**12.25** 311	**7.69** 195	**26.13** 664	**26.13** 664	**3.00** 76	**9.00** 229	**24.00** 610	**24.00** 610	**8.50** 216	**2.06** 52	**9.38** 238	**5.25** 133	**1.50** 38	**.38** 10	70
2	SDR	**16.13** 410	**48.50** 1232	**50.50** 1283	**81.50** 2070	**85.00** 2159	**20.25** 514	**12.13** 308	**9.13** 232	**8.63** 219	**27.75** 705	**32.75** 832	**8.00** 203	**4.50** 114	**25.00** 635	**30.00** 762	**12.00** 305	**12.63** 321	**11.00** 279	**5.50** 140	**2.50** 64	**.38** 10	100
3	SER	Consult Local Square D Field Office																					

∗ Without control transformer.
† With control transformer (Form F4T).

© 1998 Square D All Rights Reserved

Class 8702 Type WF Reversing Vacuum Contactor

Auxiliary Contact Units

Additional auxiliary contact units may be added to the Size 4 and 5 reversing contactors in the field. A maximum of 2 units may be added to the Size 4; a maximum of 1 unit may be added to the Size 5. No additional units may be added to the Size 6, however, 1 N.O. and 1 N.C. circuit are available on each forward and reverse contactor for customer use.

GENERAL INFORMATION

Class 8702 Type W reversing vacuum contactors are a new addition to the Square D line of contactors. These reversing contactors are used to switch capacitors, transformers and electric motors where overload protection is separately provided. Type W reversing vacuum contactors are designed for operation at 600 Volts, 50/60 Hertz.

By design, these contactors are well suited to heavy-duty applications in harsh environments. The power contacts are sealed in ceramic tubes, called vacuum interrupters or vacuum bottles, where the air has been evacuated. Arc quenchers are not required because any arc formed between opening contacts is not sustained due to the presence of the vacuum. The arc is extinguished when the current crosses zero after the contacts are opened, therefore the arc typically does not survive more than one half cycle. There is one vacuum interrupter or bottle per pole, therefore a three pole contactor has three vacuum interrupters or bottles. The power contacts are not affected by ambient conditions or contamination. This provides for long life and reliable operation in harsh applications.

Altitude

The reversing vacuum contactor is designed to tolerate normal barometric pressure variances up to 6600 feet above sea level. If the contactor is to be used above 6600 feet above sea level, please consult the factory.

Termination Means

The Size 4 reversing vacuum contactor is supplied with line and load side lugs. The Size 5 and 6 reversing vacuum contactors are supplied without line and load side lugs. Class 9999 Type LUW5 and LUW6 lug kits are available for the Size 5 and 6 contactors. These kits include six lugs and the necessary mounting hardware.

Auxiliary Contacts

An auxiliary contact block, Class 9999 Type WX11, with one normally-open contact and normally-closed contact is used with Size 4, 5 and 6 vacuum contactors.

Class 8702 – Full Voltage Reversing Vacuum Contactors (Horizontal Only)
3-Pole Polyphase – 600 Volts AC Maximum (50-60 Hertz)

NEMA Size	Enclosed Ampere Rating	Locked Rotor Current (Amps)	Motor Volts	Max. HP	∗ Coil Voltage	Open Type
						Type
4	135	1080	200 230 380 460 575	40 50 75 100 100	120 240 120 480 600	WFO3V02S WFO3V03 WFO3V02S WFO3V06 WFO3V07
5	270	2160	200 230 380 460 575	75 100 150 200 200	120 240 120 480 600	WGO3V02S WGO3V03 WGO3V02S WGO3V06 WGO3V07
6	540	4320	200 230 380 460 575	150 200 300 400 400	120 240 120 480 600	WHO3V02S WHO3V03 WHO3V02S WHO3V06 WHO3V07

File E78351
CCN NLDX2

File LR60905
Class 3211-04

© 1998 Square D All Rights Reserved

Full Voltage Contactors — NEMA
Selection – Class 8702

Class 9998 – Replacement Coils for Class 8502 and 8702 Vacuum Contactors

Size	Type	Poles	Class & Type	Hertz	Suffix Number (Complete Coil Number Consists of Class and Type Followed by Suffix Number)			
				50 60	120 Volts 110 Volts	240 Volts 220 Volts	480 Volts 440 Volts	600 Volts 550 Volts
4 5 6	WF WG WH	All	9998WF 9998WG 9998WH		120	240	480	600

Class 9999 – Vacuum Contactor Kits

For Use With		Kit Description	Class 9999 Type
Type	Size		
WF-WH	4-6	**Auxiliary Contacts, Non-Convertible** **1-N.O. & 1-N.C. Isolated Contacts**	9999WX11
WF WG-WH	4 5-6	**Coil Circuit Auxiliary Contacts** 1-N.O. & 1-N.C. Isolated Contacts, Delayed Break 1-N.C. Isolated Contact	9999WCX11 9999WLX01
WG WH	5 6	**Lug Kits** (6) lugs included (6) lugs included	9999LUW5 9999LUW6

Auxiliary Contact Ratings — NEMA A600, R300

Description	Voltage	Make	Break
Class 9999 Type WX11 and WXO1	120-600 Vac 72-120 Vac 28-72 Vac 28-300 Vac	7200 VA 60 A 60 A 28 A	720 VA 720 VA 10 A 28 VA

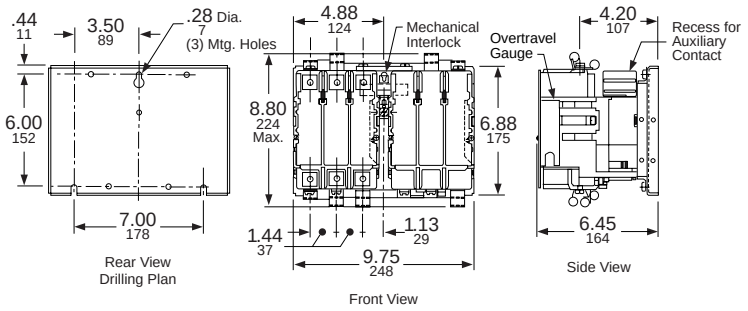

Class 8702 WF

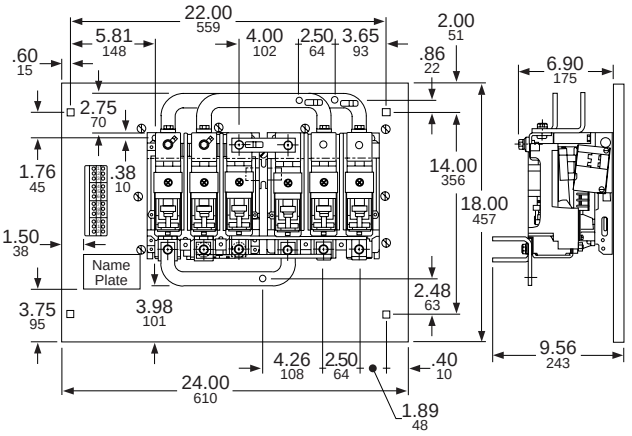

Size 5 Reversing Contactor Outline without Lugs

Class 8702 WG

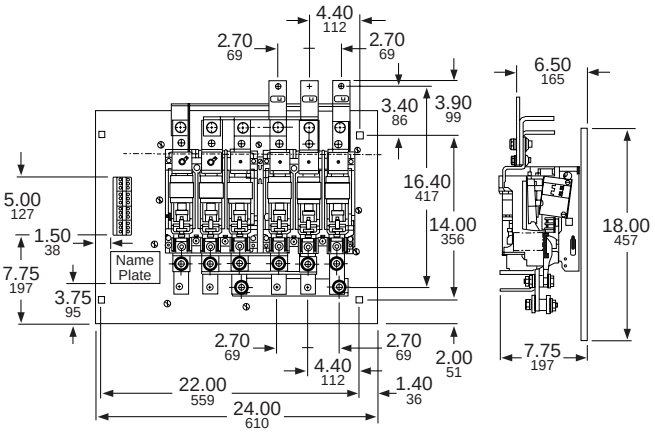

Size 6 Reversing Contactor Outline without Lugs

Class 8702 WH

© 1998 Square D All Rights Reserved

SECTION 3 – MOTOR STARTERS MULTI-SPEED

Application Data – Class 8810, 8811, 8812 40-41
Line Voltage — with Melting Alloy Overload Relays – Class 8810 42
Reversing Line Voltage Type — with Melting Alloy Overload Relays –
Class 8810 43
Line Voltage — with Melting Alloy Overload Relays or
Solid State Overload Relays – Class 8810 44-45
Line Voltage — with Melting Alloy Overload Relays – Class 8811, 8812 . . 48
Application Data – Class 8810, 8811, 8812 47
Application Data for Types SB-SJ – Class 8810, 8811, 8812 48
Dimensions – Class 8810, 8811, 8812 49
Application Data – Class 8810, 8811, 8812 50-51
Disconnect Switch or Circuit Breaker Type – Class 8810, 8811, 8812 . . . 52

© 1998 Square D All Rights Reserved

Typical Schematic Diagrams

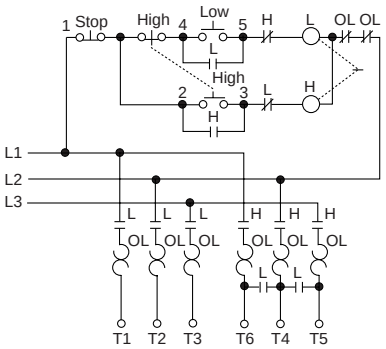

A30064-446

2-Speed Consequent Pole Constant Horsepower
NEMA Size 0-4
Sizes 5, 6 & 7 Use Special Circuitry

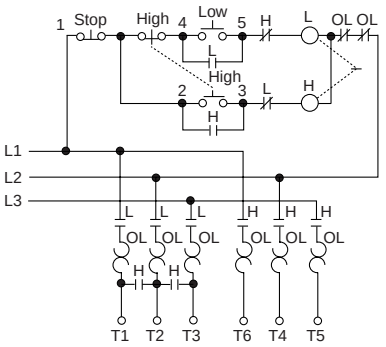

2-Speed Consequent Pole Constant or Variable Torque
NEMA Size 0-4
Sizes 5, 6 & 7 Use Special Circuitry

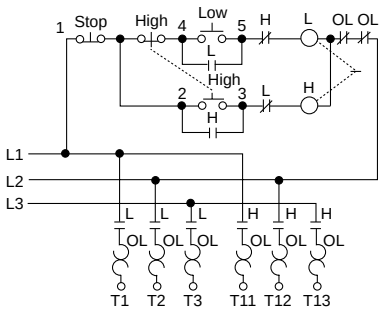

A30064-442

2-Speed Separate Winding Constant HP, Constant Torque and Variable Torque NEMA Size 0-4
Sizes 5, 6 & 7 Use Special Circuitry

Multispeed motors are available in two basic versions:

- Consequent pole
- Separate winding

A separate winding motor has a winding for each speed while a consequent pole motor has a winding for every two speeds (three speed motors have two windings). The motor connections (and thus the types of controllers) for two speed starters are exemplified by the schematic diagrams shown to the left. Note that consequent pole two speed controllers involve a 5-pole and a 3-pole starter while separate winding controllers have two 3-pole starters.

Separate winding motors are usually chosen when flexibility is important, since the speeds of a consequent pole motor are usually limited to a 2/1 ratio; a broad range of speeds can be obtained on a separate winding motor.

Both consequent pole and separate winding motors are available in three types:

- Constant horsepower
- Constant torque
- Variable torque

Typical applications for these different types of motors are shown below.

NOTE: For detailed information involving the technical aspects of flexibility of the starters used in the multispeed controllers, see Classes 8702, 8736 and 8810 application data.

Typical Applications

Constant H.P.

- Spindles
- Cutting Tools
  - — Lathes
  - — Saws

Constant Torque

- Conveyors
- Mills
- Dough Mixers
- Reciprocating Pumps

Variable Torque

- Fans
- Centrifugal Pumps

Speed Selection

The speed of a squirrel cage motor is directly proportional to the power supply frequency and inversely proportional to the number of poles in the stator winding. With the frequency constant, motor speed is determined by the number of poles.

$$\text{(RPM) Speed} = \frac{(120)\,(\text{Frequency})}{\text{No. of Poles}}$$

$$\text{Horsepower} = \frac{T \times S}{5250}$$

Where:
T = Torque in Lb Ft
S = Speed in RPM

© 1998 Square D All Rights Reserved

Special Pilot Lighting

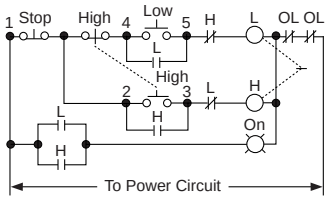

A30080-017

One pilot light “ON”

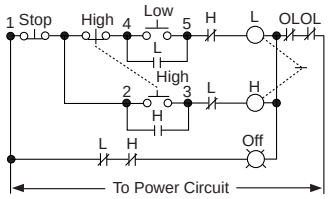

A30080-018

One pilot light “OFF”

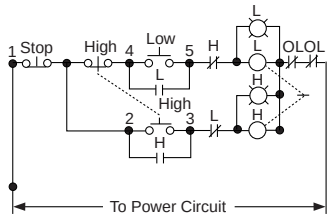

A30080-015

Two pilot lights “L” and “H”

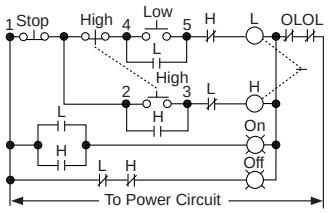

A30080-016

Two pilot lights “ON” and “OFF”

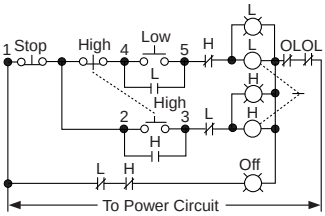

A30080-019

Three pilot lights “L”, “H” and “OFF”

ADDITIONAL FEATURES

Special Relays for Non-Reversing and Reversing Multispeed Starters

General

Standard starters are not equipped with any special relays to require starting at lowest speed, progressive acceleration or deceleration through each speed, etc. However, when the type of motor or characteristics of the load involved make certain starting or control sequences necessary, four types of relays/timers are available to accomplish the required function.

Form R1 Compelling Relay

This relay makes it necessary for the motor to be started at low speed before any higher speed can be selected. Pressing any push button except the low speed will not start the motor. This arrangement insures that the motor will always start the load at low speed. The stop button must be pressed before it is possible to change from a higher to a lower speed.

Form R2 Accelerating Relay/Timer

When the starter is equipped with Form R2 accelerating relays, the ultimate speed is determined by the button which is pressed, but the starter will start the motor at low speed and then automatically accelerate it through successive steps until the selected speed is reached. Definite time intervals must elapse between each speed change. Individual timing relays are provided for each interval, and all are adjustable. The stop button must be pressed before it is possible to change from a higher to a lower speed.

Form R3 Decelerating Relay/Timer

This is similar in action to Form R2 accelerating relays, except that they function to prevent immediate transfer from a higher to a lower speed. A definite time interval, preset on the timer, must elapse between each speed change.

Form R10 Antiplugging Relays/Timers

If it is necessary to have an imposed time delay when transferring from the forward to the reverse direction or reverse to forward, then Form R10 should be included in the form designation of the **reversing** multispeed starters. This provides up to a 60 second delay in the transfer of the direction of the motor, and can help prevent damage which could result from plugging.

© 1998 Square D All Rights Reserved

AC Two Speed Magnetic Starters
Line Voltage — with Melting Alloy Overload Relays – Class 8810

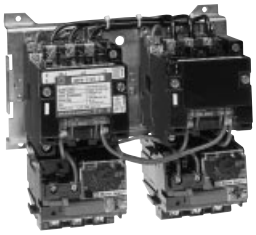

Class 8810, Type S in NEMA Type 1 Enclosure

Line voltage type, ac two speed starters are designed to control reconnectable squirrel cage motors to operate at two different constant speeds, depending upon their construction. The use of an automatic starter and proper control station permits greater operating efficiency and offers protection to both motor and machine against improper sequencing or too rapid speed change. Protection against motor overload in each speed is provided by an overload relay block which accepts three (3) thermal units.

Class 8810 Non-reversing – Two Speed – 50-60 Hertz – 600 Volts Maximum

Type of Motor	NEMA Size	Maximum Polyphase Horsepower Ratings: Constant Horsepower Motors			Constant Torque or Variable Torque Motors			General Purpose Enclosure NEMA Type 1	Watertight and Dusttight Enclosure (Stainless Steel) (Sizes 0-5 only) Size 6 Sheet Steel■ NEMA Type 4	For Hazardous Locations Class I Groups C & D Class II Groups E, F & G NEMA Types 7 and 9●	Dusttight and Driptight Industrial Use Enclosure NEMA Type 12†	Open Type
		200 V	230 V	460-575 V	200 V	230 V	460-575 V	Type	Type	Type	Type	Type
Single Winding (Consequent Pole) 5-Pole – 3-Pole												
Constant HP	0	2	2	3	. . .	. . .	. . .	SBG-1	SBW-1▲	. . .	SBA-1▲	SBO-1
	1	5	5	7½	. . .	. . .	. . .	SCG-1	SCW-1▲	SCR-1●	SCA-1▲	SCO-1
	2	7½	10	20	. . .	. . .	. . .	SDG-1	SDW-1	SDR-1●	SDA-1	SDO-1
	3	20	25	40	. . .	. . .	. . .	SEG-1	SEW-1	SER-1●	SEA-1	SEO-1
	4	30	40	75	. . .	. . .	. . .	SFG-1	SFW-1	. . .	SFA-1	SFO-1
	5	60	75	150	. . .	. . .	. . .	SGG-1	SGW-1	. . .	SGA-1	SGO-1
	6	100	150	300	. . .	. . .	. . .	SHG-1	SHW-1	. . .	SHA-1	SHO-1
Constant Torque or Variable Torque	0	. . .	. . .	. . .	3	3	5	SBG-2	SBW-2▲	. . .	SBA-2▲	SBO-2
	1	. . .	. . .	. . .	7½	7½	10	SCG-2	SCW-2▲	SCR-2●	SCA-2▲	SCO-2
	2	. . .	. . .	. . .	10	15	25	SDG-2	SDW-2	SDR-2●	SDA-2	SDO-2
	3	. . .	. . .	. . .	25	30	50	SEG-2	SEW-2	SER-2●	SEA-2	SEO-2
	4	. . .	. . .	. . .	40	50	100	SFG-2	SFW-2	. . .	SFA-2	SFO-2
	5	. . .	. . .	. . .	75	100	200	SGG-2	SGW-2	. . .	SGA-2	SGO-2
	6	. . .	. . .	. . .	150	200	400	SHG-2	SHW-2	. . .	SHA-2	SHO-2
Two Winding (Separate WInding) 3-Pole – 3-Pole♦												
Constant HP♦	0	2	2	3	. . .	. . .	. . .	SBG-3	SBW-3▲	. . .	SBA-3▲	SBO-3
	1	5	5	7½	. . .	. . .	. . .	SCG-3	SCW-3▲	SCR-3●	SCA-3▲	SCO-3
	2	7½	10	20	. . .	. . .	. . .	SDG-3	SDW-3	SDR-3●	SDA-3	SDO-3
	3	20	25	40	. . .	. . .	. . .	SEG-3	SEW-3	SER-3●	SEA-3	SEO-3
	4	30	40	75	. . .	. . .	. . .	SFG-3	SFW-3	. . .	SFA-3	SFO-3
	5	60	75	150	. . .	. . .	. . .	SGG-3	SGW-3	. . .	SGA-3	SGO-3
	6	100	150	300	. . .	. . .	. . .	SHG-3	SHW-3	. . .	SHA-3	SHO-3
	7	. . .	225	450	. . .	. . .	. . .	SJG-3	. . .	. . .	SJA-3	SJO-3
Constant Torque or Variable Torque♦	0	. . .	. . .	. . .	3	3	5	SBG-4	SBW-4▲	. . .	SBA-4▲	SBO-4
	1	. . .	. . .	. . .	7½	7½	10	SCG-4	SCW-4▲	SCR-4●	SCA-4▲	SCO-4
	2	. . .	. . .	. . .	10	15	25	SDG-4	SDW-4	SDR-4●	SDA-4	SDO-4
	3	. . .	. . .	. . .	25	30	50	SEG-4	SEW-4	SER-4●	SEA-4	SEO-4
	4	. . .	. . .	. . .	40	50	100	SFG-4	SFW-4	. . .	SFA-4	SFO-4
	5	. . .	. . .	. . .	75	100	200	SGG-4	SGW-4	. . .	SGA-4	SGO-4
	6	. . .	. . .	. . .	150	200	400	SHG-4	SHW-4	. . .	SHA-4	SHO-4
	7	. . .	. . .	. . .	. . .	300	600	SJG-4	. . .	. . .	SJA-4	SJO-4

♦ Type numbers shown for three phase separate winding motor starters apply only when motor windings are wye connected. When motor windings are connected open delta use three phase consequent pole motor starters.
▲ Separate NEMA Type 4 and 12 enclosures available.
† NEMA Type 12 enclosures may be field modified for outdoor applications.
■ NEMA Type 4X enclosures available; consult local Square D field office.
● Addition of forms to standard NEMA Type 7 and 9 enclosed devices is limited. Consult local Square D field office.

380 Volts, 50 Hertz – above type numbers will apply to starters for 380 volt, 50 hertz but the selection by NEMA size must be based on the horsepower ratings in the following table:

NEMA Size	0	1	2	3	4	5	6
Constant Horsepower	3	7½	20	40	60	100	200
Constant or Variable Torque Horsepower	5	10	25	50	75	150	300

Thermal Units

Thermal units should be ordered separately. See Thermal Unit Selection Index. **Do not use horsepower rating(s) for thermal unit selection. All three phase two speed magnetic starters require six (6) thermal units, three per speed.** Use nameplate FLC's (Full Load Currents) from motor nameplate.

Special Features — See Factory Modifications and Forms, Catalog 9999CT9701.

Dimensions — See Pages 49-52.

Field Modification Kits — See Catalog 9999CT9701 Section.

Class 8810, 8811 and 8812 multispeed starters, both non-reversing and reversing versions, are available with either circuit breaker or disconnect switch. Refer to Factory Modifications and Forms for Form numbers and price additions.

How to Order:

To Order Specify:	*Catalog Number*			
• Class Number • Type Number • Coil Voltage Code • Form(s)	Class	Type	Coil Voltage Code	Form(s)
	8810	SCO8	VO6	P1S

File E78351
CCN NLDX

File LR60905
Class 3211-04

© 1998 Square D All Rights Reserved

AC Reversing Two Speed Magnetic Starters
Line Voltage Type — with Melting Alloy Overload Relays – Class 8810

Class 8810 AC reversing two speed starters combine the functions of reversing and speed selection in one controller. The units are electrically and mechanically interlocked, and include motor running overcurrent protection. Typical applications include conveyors, drilling and tapping machines, and cooling tower fans. Many of these applications also require the special relay features.

Class 8810 – Reversing – 50-60 Hertz – 600 Volts Maximum

Type of Motor	NEMA Size	Maximum Polyphase Ratings: Constant Horsepower Motors			Maximum Polyphase Ratings: Constant Torque or Variable Torque Motors			Reversing In One Speed Only			Reversing In Both Speeds		
		200 V	230 V	460-575 V	200 V	230 V	460-575 V	General Purpose Enclosure NEMA Type 1	Dusttight and Driptight Industrial Use Enclosure NEMA Type 12 (Type 3 and 3R)♦	Open Type	General Purpose Enclosure NEMA Type 1	Dusttight and Driptight Industrial Use Enclosure NEMA Type 12 (Type 3 and 3R)♦	Open Type
								Type★	Type★	Type★	Type	Type	Type
Single Winding Constant Horsepower	0	2	2	3	. . .	. . .	. . .	SBG-21	SBA-21	SBO-21	SBG-31	SBA-31	SBO-31
	1	5	5	7½	. . .	. . .	. . .	SCG-21	SCA-21	SCO-21	SCG-31	SCA-31	SCO-31
	2	7½	10	20	. . .	. . .	. . .	SDG-21	SDA-21	SDO-21	SDG-31	SDA-31	SDO-31
	3	20	25	40	. . .	. . .	. . .	SEG-21	SEA-21	SEO-21	SEG-31	SEA-31	SEO-31
	4	30	40	75	. . .	. . .	. . .	SFG-21	SFA-21	SFO-21	SFG-31	SFA-31	SFO-31
	5	60	75	150	. . .	. . .	. . .	SGG-21	SGA-21	SGO-21	SGG-31	SGA-31	SGO-31
Single Winding Constant Torque or Variable Torque	0	. . .	. . .	. . .	3	3	5	SBG-22	SBA-22	SBO-22	SBG-32	SBA-32	SBO-32
	1	. . .	. . .	. . .	7½	7½	10	SCG-22	SCA-22	SCO-22	SCG-32	SCA-32	SCO-32
	2	. . .	. . .	. . .	10	15	25	SDG-22	SDA-22	SDO-22	SDG-32	SDA-32	SDO-32
	3	. . .	. . .	. . .	25	30	50	SEG-22	SEA-22	SEO-22	SEG-32	SEA-32	SEO-32
	4	. . .	. . .	. . .	40	50	100	SFG-22	SFA-22	SFO-22	SFG-32	SFA-32	SFO-32
	5	. . .	. . .	. . .	75	100	200	SGG-22	SGA-22	SGO-22	SGG-32	SGA-32	SGO-32
Constant† Horsepower	0	2	2	3	. . .	. . .	. . .	SBG-23	SBA-23	SBO-23	SBG-33	SBA-33	SBO-33
	1	5	5	7½	. . .	. . .	. . .	SCG-23	SCA-23	SCO-23	SCG-33	SCA-33	SCO-33
	2	7½	10	20	. . .	. . .	. . .	SDG-23	SDA-23	SDO-23	SDG-33	SDA-33	SDO-33
	3	20	25	40	. . .	. . .	. . .	SEG-23	SEA-23	SEO-23	SEG-33	SEA-33	SEO-33
	4	30	40	75	. . .	. . .	. . .	SFG-23	SFA-23	SFO-23	SFG-33	SFA-33	SFO-33
	5	60	75	150	. . .	. . .	. . .	SGG-23	SGA-23	SGO-23	SGG-33	SGA-33	SGO-33
Constant† Torque or Variable Torque	0	. . .	. . .	. . .	3	3	5	SBG-24	SBA-24	SBO-24	SBG-34	SBA-34	SBO-34
	1	. . .	. . .	. . .	7½	7½	10	SCG-24	SCA-24	SCO-24	SCG-34	SCA-34	SCO-34
	2	. . .	. . .	. . .	10	15	25	SDG-24	SDA-24	SDO-24	SDG-34	SDA-34	SDO-34
	3	. . .	. . .	. . .	25	30	50	SEG-24	SEA-24	SEO-24	SEG-34	SEA-34	SEO-34
	4	. . .	. . .	. . .	40	50	100	SFG-24	SFA-24	SFO-24	SFG-34	SFA-34	SFO-34
	5	. . .	. . .	. . .	75	100	200	SGG-24	SGA-24	SGO-24	SGG-34	SGA-34	SGO-34

† Prices and Type numbers shown for three phase, separate winding motor starters apply only when motor windings are wye connected. When motor windings are connected open delta use the prices shown for consequent pole motor starters.

▲ Specify the speed which requires reversing by adding an L (low) or an H (high) after the type number, e.g. A Class 8810 Type SBG-21 with reversing in low only would be ordered as a Class 8810 Type SBG-21L.

♦ NEMA Type 12 enclosures may be field modified for outdoor applications. For details refer to Class 9991.

Typical Elementray Diagrams

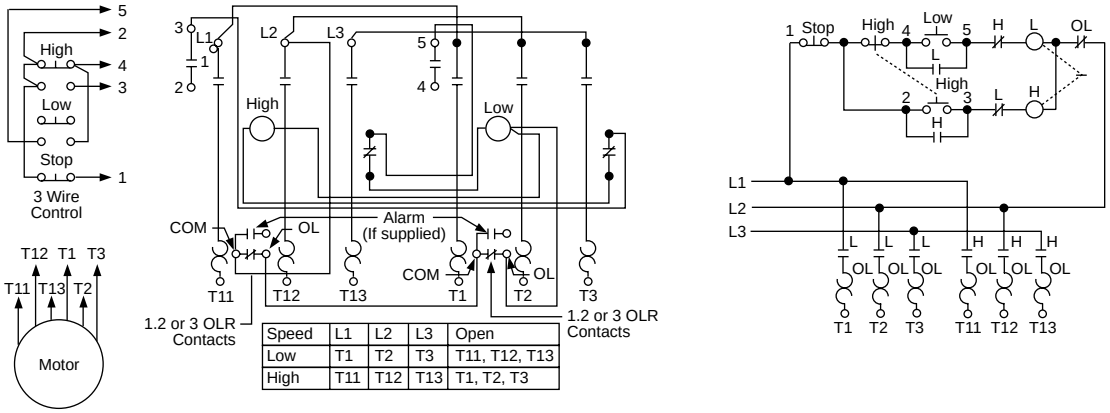

How to Order:

To Order Specify:	Catalog Number			
• Class Number • Type Number • Coil Voltage Code • Form(s)	Class	Type	Coil Voltage Code	Form(s)
	8810	SCO8	VO6	P1S

Thermal Units

Thermal units should be ordered separately. See Thermal Unit Selection Index. **Do not use horsepower rating(s) for thermal unit selection. All three phase two speed magnetic starters require six (6) thermal units, three per speed.** Use nameplate FLC's (Full Load Currents) from motor nameplate.

© 1998 Square D All Rights Reserved

Class 8810 — Non-Reversing — Horizontally Arranged Starters
▲†Glass Polyester Watertight, Dusttight and Corrosion Resistant Enclosure
50-60 Hertz – 600 Volts Maximum

Type of Motor	NEMA Size	Maximum Horsepower Ratings				For Consequent Pole Motors	For Separate Winding Motors
		200 V	230 V	380 V	460-575 V	Type	Type
Constant Horsepower	0	2	2	3	3	SBW-51	SBW-53
	1	5	5	7½	7½	SCW-51	SCW-53
	2	7½	10	20	20	SDW-51	SDW-53
	3	20	25	40	40	SEW-51	SEW-53
	4	30	40	60	75	. . .	SFW-53
Constant Torque or Variable Torque	0	3	3	5	5	SBW-52	SBW-54
	1	7½	7½	10	10	SCW-52	SCW-54
	2	10	15	25	25	SDW-52	SDW-54
	3	25	30	50	50	SEW-52	SEW-54
	4	40	50	75	100	. . .	SFW-54

▲ NEMA Type 4X hubs are included with each starter at no additional cost.
† Combination features available – consult factory.

Vertically Arranged, Open Type, Two Speed Starters

Vertically arranged starters are used where width limitations prevent the use of the conventional horizontally arranged device. Such starters may be used to advantage in threaded NEMA Type 7 explosion-proof enclosures, and in multi-motor panels in which other equipment within the enclosure used limits the available width.

These starters have all the features of the standard horizontally arranged devices, but the two contactors are in a vertical arrangement. These starters are offered in open type construction only.

Class 8810 — Non-Reversing — Vertically Arranged Starters – 50 or 60 Hertz – 600 Volts Maximum

Type of Motor	NEMA Size	Maximum Horsepower Ratings				For Consequent Pole Motors	For Separate Winding Motors
		200 V	230 V	380 V	460-575 V	Type	Type
Constant Horsepower	0	2	2	3	3	SBO-11	SBO-13
	1	5	5	7½	7½	SCO-11	SCO-13
	2	7½	10	20	20	SDO-11	SDO-13
	3	20	25	40	40	SEO-11	SEO-13
	4	30	40	60	75	SFO-11	SFO-13
Constant Torque or Variable Torque	0	3	3	5	5	SBO-12	SBO-14
	1	7½	7½	10	10	SCO-12	SCO-14
	2	10	15	25	25	SDO-12	SDO-14
	3	25	30	50	50	SEO-12	SEO-14
	4	40	50	75	100	SFO-12	SFO-14

How to Order:

To Order Specify:	*Catalog Number*			
	Class	Type	Coil Voltage Code	Form(s)
• Class Number • Type Number • Coil Voltage Code • Form(s)	8810	SCO8	VO6	P1S

Thermal Units

Thermal units should be ordered separately. For selection of thermal units, refer to the Catalog Thermal Unit Selection Index, Digest or Bulletin SM-416, entitled “Application and Selection of Overload Relays.” Do not use horsepower rating(s) for thermal unit selection. All three phase two speed magnetic starters require six (6) thermal units, three per speed. Use nameplate FLC’s (Full Load Currents) from motor nameplate.

© 1998 Square D All Rights Reserved

Special Arrangements with Three Devices

Three Type S Contactors can be mechanically interlocked so that only one contactor can be energized at any one time. The mechanical interlock, pictured in Figure 2, is an interference (non-jamming) type locking at the beginning of the stroke of any contactor.

Factory assembled units are listed in the table below. Figures 1 and 2 show factory assembled and wired devices. All contactors are both electrically and mechanically interlocked. The class and type numbers listed only cover the contactor and/or starter mounting arrangement, NEMA size of the devices, and the number of poles. A power and control wiring diagram must accompany each order. Additional electrical interlocks are available factory (or field) installed in the locations shown in Figure No. 2 and Table No. 2, Page 52. 8810 starters are supplied with melting alloy type thermal overload relays.

For customer assembled units, the basic mechanical interlock and base assembly can be purchased separately. Standard Class 8502 contactors and Class 8536 starters are used in the locations and pole arrangement shown. If Class 8536 starters are used, it is necessary to mount a Class 9999 Type SO bracket below the overload block to give the block support.

For electrically interlocking customer assembled units a Class 9999 Type SX-12, normally closed internal interlock and/or a Class 9999 Type SX-7, normally closed external interlock can be used.

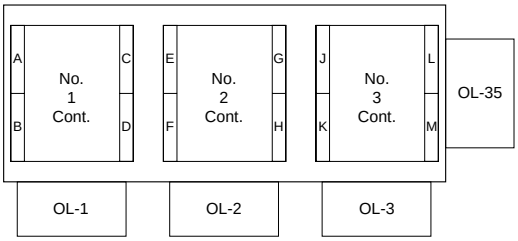

Figure 2
Contactor, overload and external electrical interlock positions

Three Mechanically Interlocked Contactors and Starters — Factory Assembled

Class	Type	Contactor Position — See Figure 2						Overload Relay Position See Fig. 3	Number of Thermal Units Required
		No. 1 Contactor Size and Poles		No. 2 Contactor Size and Poles		No. 3 Contactor Size and Poles			
		NEMA Size 1 No. of Poles	NEMA Size 2 No. of Poles	NEMA Size 1 No. of Poles	NEMA Size 2 No. of Poles	NEMA Size 1 No. of Poles	NEMA Size 2 No. of Poles		
8810	SCO-41	3	. . .	3	. . .	3	. . .	OL-2 & -3	6
	SCO-42	4	. . .	3	. . .	3	. . .		
	SCO-43	. . .	3	3	. . .	3	. . .		
	SCO-44	. . .	4	3	. . .	3	. . .		
	SDO-41	. . .	3	. . .	3	. . .	3		
	SDO-42	. . .	4	. . .	3	. . .	3		
8810	SCO-45	3	. . .	3	. . .	5	. . .	OL-2 & -3	6
	SCO-46	4	. . .	3	. . .	5	. . .		
	SCO-47	. . .	3	3	. . .	5	. . .		
	SCO-48	. . .	4	3	. . .	5	. . .		
	SDO-43	. . .	3	. . .	3	. . .	5		
	SDO-44	. . .	4	. . .	3	. . .	5		

Ordering Information Required

1. Order complete factory assembled devices by class and type number from table above.
2. Supply wiring diagram for power and control connections as catalog number only covers general contactor and starter mounting arrangement.
3. Voltage and frequency of contactor coils.
4. Select additional factory assembled electrical interlocks from table on Page 47 specifying interlock position letter and whether interlock is N.O. or N.C.
5. Example of ordering information required on factory assembled devices:
   (a) Class 8810 Type SCO-45
   (b) Wired per diagram (which must accompany order)
   (c) All coils — 120 volts, 60 hertz
   (d) Additional electrical interlocks: C — N.O., E — N.C., and J — N.O.
6. For customer assembly of three mechanically interlocked devices, order the mechanical interlock and overload relay mounting brackets by class and type numbers.

Thermal Units

Thermal units should be ordered separately. For selection of thermal units, refer to the Catalog Thermal Unit Selection Index R Digest. Use the motor nameplate FLC's (Full Load Currents) to select thermal units.

© 1998 Square D All Rights Reserved

Three and Four Speed AC Magnetic Starters
Line Voltage — with Melting Alloy Overload Relays – Class 8811, 8812

Class 881 and 8812 line voltage starters are designed to control 3 and 4 speed motors, respectively. The use of an automatic starter and proper control station permits greater efficiency. The addition of compelling relays to a starter gives protection to both the motor and the machine against an improper sequence or a too rapid change in speed. The motor is protected against excessive operating currents by overload relay blocks (one for each motor speed) each of which accepts three (3) thermal units. While the starters listed are for use with consequent pole motors only, separate winding motor starters are also available upon request.

Class 8811 — Three Speed AC Magnetic Starters — Consequent Pole, 2 Winding 600 Volts Maximum — 50-60 Hertz

Type of Motor	NEMA Size	Maximum Horsepower			General Purpose Enclosure NEMA Type 1	Watertight and Dusttight Enclosure (Stainless Steel) NEMA Type 4	Dusttight and Driptight Industrial Use Enclosure NEMA Type 12 (Type 3 and 3R)†	Open Type
		200 V	230 V	460-575 V	Type	Type	Type	Type
Constant Horsepower	0	2	2	3	SBG-1	SBW-1	SBA-1	SBO-1
	1	5	5	7½	SCG-1	SCW-1	SCA-1	SCO-1
	2	7½	10	20	SDG-1	SDW-1	SDA-1	SDO-1
	3	20	25	40	SEG-1	SEW-1	SEA-1	SEO-1
	4	30	40	75	SFG-1	SFW-1	SFA-1	SFO-1
Constant Torque	0	3	3	5	SBG-2	SBW-2	SBA-2	SBO-2
	1	7½	7½	10	SCG-2	SCW-2	SCA-2	SCO-2
	2	10	15	25	SDG-2	SDW-2	SDA-2	SDO-2
	3	25	30	50	SEG-2	SEW-2	SEA-2	SEO-2
	4	40	50	100	SFG-2	SFW-2	SFA-2	SFO-2
Variable Torque	0	3	3	5	SBG-3	SBW-3	SBA-3	SBO-3
	1	7½	7½	10	SCG-3	SCW-3	SCA-3	SCO-3
	2	10	15	25	SDG-3	SDW-3	SDA-3	SDO-3
	3	25	30	50	SEG-3	SEW-3	SEA-3	SEO-3
	4	40	50	100	SFG-3	SFW-3	SFA-3	SFO-3

Class 8812 — Four Speed AC Magnetic Starters — Consequent Pole, 2 Winding 600 Volts Maximum — 50-60 Hertz

Type of Motor	NEMA Size	Maximum Horsepower			General Purpose Enclosure NEMA Type 1	Watertight and Dusttight Enclosure (Stainless Steel) NEMA Type 4	Dusttight and Driptight Industrial Use Enclosure NEMA Type 12 (Type 3 and 3R)†	Open Type
		200 V	230 V	460-575 V	Type	Type	Type	Type
Constant Horsepower	0	2	2	3	SBG-1	SBW-1	SBA-1	SBO-1
	1	5	5	7½	SCG-1	SCW-1	SCA-1	SCO-1
	2	7½	10	20	SDG-1	SDW-1	SDA-1	SDO-1
	3	20	25	40	SEG-1	SEW-1	SEA-1	SEO-1
	4	30	40	75	SFG-1	SFW-1	SFA-1	SFO-1
Constant Torque	0	3	3	5	SBG-2	SBW-2	SBA-2	SBO-2
	1	7½	7½	10	SCG-2	SCW-2	SCA-2	SCO-2
	2	10	15	25	SDG-2	SDW-2	SDA-2	SDO-2
	3	25	30	50	SEG-2	SEW-2	SEA-2	SEO-2
	4	40	50	100	SFG-2	SFW-2	SFA-2	SFO-2
Variable Torque	0	3	3	5	SBG-3	SBW-3	SBA-3	SBO-3
	1	7½	7½	10	SCG-3	SCW-3	SCA-3	SCO-3
	2	10	15	25	SDG-3	SDW-3	SDA-3	SDO-3
	3	25	30	50	SEG-3	SEW-3	SEA-3	SEO-3
	4	40	50	100	SFG-3	SFW-3	SFA-3	SFO-3

† NEMA Type 12 enclosures may be field modified for outdoor applications.

Thermal Units

Thermal units should be ordered separately. For selection of thermal units, refer to the Catalog Thermal Unit Selection Index R Digest. All starters require the use of three (3) thermal units for each speed of the motor. Do not use the horsepower rating(s) for selection. Use nameplate FLC's (Full Load Currents) from motor nameplate.

How to Order:

To Order Specify:	*Catalog Number*			
• Class Number • Type Number • Coil Voltage Code • Form(s)	Class	Type	Coil Voltage Code	Form(s)
	8810	SCO8	VO6	P1S

File E78351
CCN NLDX

File LR60905
Class 3211-04

© 1998 Square D All Rights Reserved

Application Data for Types SB-SH

Form Designations for Factory Installation of Electrical Interlocks

		Additional Electrical Interlocks on High Starter						
		Standard (No Additional Interlocks)	Change N.O. Holding Circuit Interlock to N.C.	1 N.O.	1 N.C.	2 N.O.	1 N.O.-1 N.C.	2 N.C.
Additional Electrical Interlocks on Low Starter	Standard (No Additional Interlocks)		X01	X02	X03	X05	X06	X07
	Change N.O. Holding Circuit Interlock to N.C.	X10	X11	X12	X13	X15	X16	X17
	1 N.O.	X20	X21	X22	X23	X25	X26	X27
	1 N.C.	X30	X31	X32	X33	X35	X36	X37
	2 N.O.	X50	X51	X52	X53	X55	X56	X57
	1 N.O.-1 N.C.	X60	X61	X62	X63	X65	X66	X67
	2 N.C.	X70	X71	X72	X73	X75	X76	X77

Control Transformer Selection

The following table gives the proper size control transformer to be used with a given reversing device, with or without additional electrical interlocks or timer.

NEMA Size	Type	No. of Poles	Transformer∗ Class 9070 Type
0, 1 & 2	SB, SC & SD	Any	EO-2 or GO-2
3	SE	3	EO-3 or GO-3
		4 & 5	EO-4
4	SF	Any	EO-4
5	SG	Any	▲
6	SH	Any	‡
7	SJ	Any	†

∗ If a different manufacturer's transformer is to be used, check its suitability for use with coil loads. See inrush and sealed VA ratings of the contactor coil.
▲ Standard engineering practice for Size 5 contactors is to use a Class 9070 Type EO-1 transformer and Class 8501 Type DO-20 control relay.
‡ A Class 9070 Type EO-3S2 transformer is an integral part of the Size 6 control circuit providing 120 volt control circuit voltage as standard on devices wired for common control.
† A Class 9070 Type EO-19-S2 transformer is an integral part of the size 7 control circuit providing 120 volt control circuit voltage as standard on devices wired for common control.

Maximum Number of Auxiliary Units

NEMA Size (Type)	No. of Poles of Basic Contactor	Maximum number of auxiliary units on each contactor, forward or reverse, (in addition to internal holding circuit and electrical interlocks).
00, 0, 1 and 2 (SA, SB, SC and SD)	2 or 3	4 single circuit external interlocks (N.O. or N.C.)
		1 single circuit external interlock (N.O. or N.C.) plus 1 attached timer (ON or OFF delay).
	4	2 single circuit external interlocks (N.O. or N.C.)
3, 4, 5 and 6 (SE, SF, SG and SH)	Any	2 single circuit external interlocks (N.O. or N.C.)
		1 single circuit external interlock plus 1 attached timer (ON or OFF delay).
7 (SJ)	Any	Consult local Square D field office

AC Magnet Coils for AC Contactors and Starters

Devices Using Coil			Coil Specification Number	Suffix Numbers (Complete coil part number consists of specification number followed by suffix number as 31041-400-51.)							
NEMA Size	Type	Poles		24 V/60 Hz	120 V/60 Hz 110 V/50 Hz	208 V/60 Hz	220 V/60 Hz	240 V/60 Hz 220 V/50 Hz	277 V/60 Hz	480 V/60 Hz 440 V/50 Hz	600 V/60 Hz 550 V/50 Hz
00	SA	All	31041-400-	20	42	48	‡	51	52	60	62
0	SB	All	31041-400-	20	42	48	‡	51	52	60	62
1	SC	All	31041-400-	20	42	48	‡	51	52	60	62
2	SD	3	31063-409-	16	38	44	‡	47	49	57	60
		4-5	31063-400-	16	38	44	‡	47	49	57	60
3	SE	3	31074-400-	16	38	44	‡	47	49	57	60
		4-5	31091-400-	16	38	44	‡	47	49	57	60
4	SF	All	31091-400-	16	38	44	‡	47	49	57	60
5	SG	3	31096-400-	. . .	09	15	‡	18	19	24	29
6	SH	3	31104-400-50 (all voltages)								
7	SJ	3	31104-400-50 (all voltages)								

‡ For 220 volt and 230 volt, 60 hertz applications, use 240 volt coil.

© 1998 Square D All Rights Reserved

Class 9999 Type SM-1 Mechanical Interlock For Two Contactors Horizontally Mounted

Class 9999 Type SM-12 For Sizes 3 and 4 Horizontally Mounted

MECHANICAL INTERLOCK

General

Type S contactors or starters can be mechanically interlocked so that only one device will be energized at a time. The mechanical interlock is an interference (non-jamming) type, locking at the beginning of the stroke of any starter or contactor.

Overload Relay Mounting Bracket

Mechanical interlock Types SM-1 through SM-10 for Sizes 00-2 devices use overload relay mounting brackets to support the overload relay portion of the starter.

Type S Sizes 00, 0, 1 and 2

The mechanical interlock is mounted on the underside of the reversing baseplate. Two pins extend from the mechanical interlock through openings in the baseplate and engage the contact carrier of each contactor. Two styles of mechanical interlocks are used: one version for three pole contactors, a different version for four or five pole contactors. **When adding a power pole to an existing three pole reversing contactor, a new mechanical interlock must also be installed.**

Three unit mechanically interlocked contactors and/or starters are also available for various combinations of Sizes 0, 1 and 2.

Type S Sizes 3, 4, 5 and 6

The mechanical interlock is separate from the mounting pan on Sizes 3-6. Cams on the mechanical interlocks are operated by the contact carrier of each contactor. The mechanical interlock is attached to the underside of the two contactors on Sizes 3 and 4; directly to the mounting pan on sizes 5 and 6. Size 5 and 6 mechanical interlocks are sold only as a factory assembly with the 8810 starter.

The mechanical interlock utilizes a special baseplate and bracket that connects between the armatures. This is sold only as a factory assembly with the 8810 starter.

Mechanical Interlock for Two Contactors

Kit Description – The following kits consist of the mechanical interlock and base assembly for interlocking 2-5 pole contactors. Mechanical interlocks for horizontal and vertical mounting are listed for various pole arrangements.			Contactor NEMA Size	Class 9999 Type
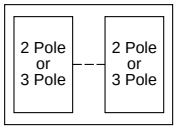 Horizontal Type SM-1 for Size 00†, 0, or 1 Type SM-6 for Size 2 Type SM-12 for Sizes 3 & 4	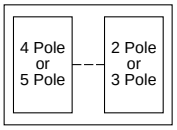 Horizontal∗ Type SM-2 for Size 0 or 1 Type SM-7 for Size 2 Type SM-12 for Sizes 3 & 4	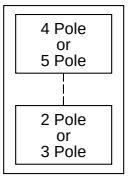 Vertical∗ Type SM-2 for Size 0 or 1 Type SM-10 for Size 2 Type SM-11 for Size 3 Type SM-13 for Size 4	00†, 0, 1 0, 1 0, 1 0, 1 0, 1	SM-1 SM-2∗ SM-3 SM-4 SM-5
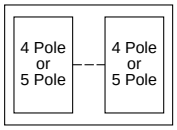 Horizontal Type SM-3 for Size 0 or 1 Type SM-8 for Size 2 Type SM-12 for Sizes 3 & 4	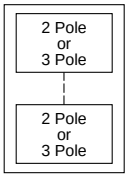 Vertical Type SM-4 for Size 0 or 1 Type SM-9 for Size 2 Type SM-11 for Size 3 Type SM-13 for Size 4	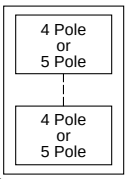 Horizontal Type SM-5 for Size 0 or 1 Type SM-11 for Size 3 Type SM-13 for Size 4	2 2 2 2 2 3 3, 4 4	SM-6 SM-7 SM-8 SM-9 SM-10 SM-11▲ SM-12▲ SM-13▲

∗ The type SM-2 interlock is factory assembled for horizontal mounting but can easily be converted to vertical mounting. Conversion instructions are included.
† For replacement only on the NEMA Size 00, reversing starters and contactors.
▲ Interlocks do not include mounting pan.

Type SO-11 Overload Relay Mounting Bracket

Overload Relay Mounting Bracket

Kit Description	Class 9999 Type
Bracket for one overload relay used with horizontal mechanical interlocks, Types SM-1, SM-2, SM-3, SM-6, SM-7 and SM-8	SO-11
Bracket for two overload relays used with vertical mechanical interlocks, Types SM-2, SM-4, SM-5, SM-9 and SM-10	SO-12

© 1998 Square D All Rights Reserved

Non-Reversing — Open Type

Approximate Dimensions

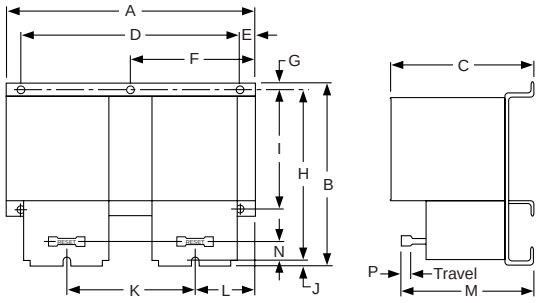

Figure 1
Class 8810, Sizes 0, 1 & 2 Types SBO, SCO & SDO

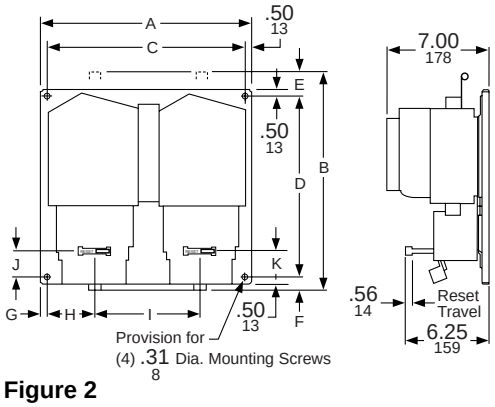

Figure 2
Class 8810, Sizes 3 & 4 Types SEO and SFO

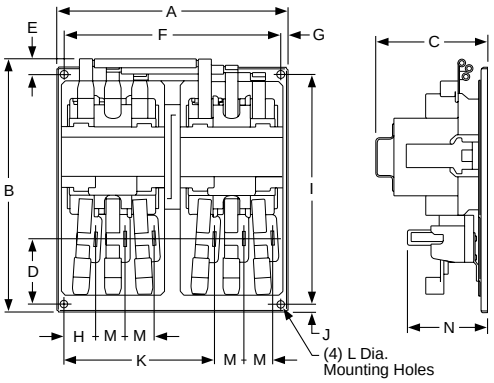

Figure 3
Class 8810, Size 5 Type SGO

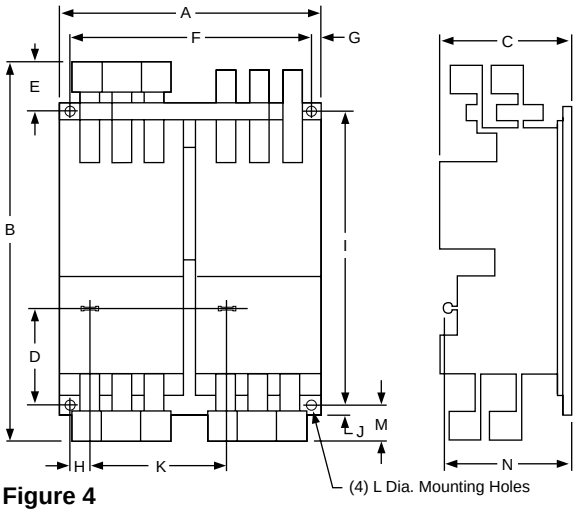

Figure 4
Class 8810, Size 6 Type SHO

Fig. No.	NEMA Size	Type	Mtg. Holes	A		B		C		D		E		F		G		H		I		J		K		L		M		N	
				IN	mm	IN	mm	IN	mm	IN	mm	IN	mm	IN	mm	IN	mm	IN	mm	IN	mm	IN	mm	IN	mm	IN	mm	IN	mm	IN	mm
1	0 and 1	SBO-1, 2 SCO-1, 2	4	9.63	245	7.34	186	5.31	135	8.00	203	.63	16	. . .	. . .	.22	6	6.91	176	. . .	. . .	.22	6	4.75	121	2.25	57	5.06	129	.59	15
		SBO-3, 4 SCO-3, 4	3	7.13	181	6.91	176	5.31	135	. . .	. . .	. . .	. . .	3.41	87	.47	12	6.22	158	. . .	. . .	.22	6	3.56	90	1.63	41	5.06	129	.59	15
	2	SDO-1, 2	6	12.03	306	8.53	217	6.03	153	10.38	264	.50	13	. . .	. . .	.25	6	8.13	207	6.25	159	.16	4	5.75	146	2.81	71	5.16	131	.78	20
		SDO-3, 4	3	9.00	229	8.06	205	6.03	153	. . .	. . .	. . .	. . .	4.50	114	.38	10	7.50	191	. . .	. . .	.19	5	4.34	110	2.16	55	5.16	131	.78	20
2	3	SEO-1, 2	4	18.00	457	14.44	367	17.00	432	12.25	311	1.50	38	.69	18	.50	13	6.44	164	7.38	187	1.66	42	2.16	55	. . .	. . .	. . .	. . .	. . .	. . .
		SEO-3, 4	4	12.75	324	12.28	312	11.75	298	10.75	273	1.03	26	.50	13	.50	13	2.50	64	6.75	171	1.16	29	1.16	29	. . .	. . .	. . .	. . .	. . .	. . .
	4	SFO-1, 2	4	18.63	473	15.59	396	17.00	432	12.25	311	1.84	47	1.50	38	1.13	29	6.44	164	7.66	195	1.66	42	1.66	42	. . .	. . .	. . .	. . .	. . .	. . .
		SFO-3, 4	4	14.25	362	14.59	371	13.25	337	12.25	311	1.84	47	.50	13	.50	13	2.94	75	7.38	187	1.66	42	1.66	42	. . .	. . .	. . .	. . .	. . .	. . .
3	5	SGO-1, 2∗	4	29.28	744	20.28	515	9.38	238	5.41	137	1.28	33	28.00	711	.63	16	12.56	319	19.00	483	.63	15	22.53	572	.50	13	2.41	61	6.63	168
		SGO-3, 4	4	19.28	490	20.28	515	9.38	238	5.14	137	1.28	33	18.00	457	.63	16	2.63	67	19.00	483	.63	15	12.53	318	.50	13	2.41	61	6.63	168
4	6▲	SHO-1, 2∗	4	29.53	750	22.44	570	9.53	242	6.97	177	3.81	97	28.00	711	.75	19	11.63	295	21.19	538	.63	15	9.88	251	.56	14	3.03	77	9.31	236
		SHO-3, 4	4	19.53	496	22.44	570	9.53	242	6.97	177	3.81	97	18.00	457	.75	19	1.69	43	21.19	538	.63	15	9.88	251	.56	14	3.03	77	9.31	236
—	7♦	SJO-3, 4	Consult Square D																												

∗ Consequent pole, type starters consist of two 3-pole starters as pictured in Figure 3 and an additional 2-pole shorting contactor (not shown), all on a common base-plate, horizontally mounted.
▲ Current transformers used with Size 1 overload relay blocks.
♦ Solid state overloads and special current transformers.

© 1998 Square D All Rights Reserved

Non-Reversing — Non-Combination — Enclosed

Approximate Dimensions

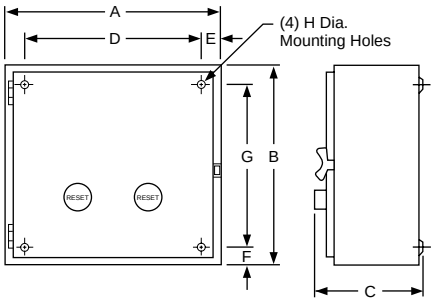

Figure 1

NEMA Type 1 Enclosure – Figure 1

Type	A		B		C		D		E		F		G		H	
	IN	mm	IN	mm	IN	mm	IN	mm	IN	mm	IN	mm	IN	mm	IN	mm
SBG and SCG	11.88	302	11.88	302	7.53	191	9.75	248	1.06	27	1.06	27	9.75	248	.31	8
SDG	14.88	378	14.13	359	7.66	195	12.75	324	1.06	27	1.06	27	12.00	305	.31	8
SEG-3 & -4 and SFG-3 & -4	18.16	461	29.16	741	9.23	234	15.50	394	1.34	34	1.34	34	26.50	673	.44	11
SEG-1 & -2 and SFG-1 & -2	22.16	563	39.16	995	10.23	260	19.50	495	1.34	34	1.34	34	36.50	927	.44	11
SGG-1, 2, 3, 4	20.22	514	65.75	1670	6.45	164	31.00	787	2.13	54	2.13	54	42.00	1067	.56	14
SHG-1, 2, 3, 4	36.22	920	62.22	1580	19.47	495	Floor Mount									
SJG-3 & 4	Consult Square D															

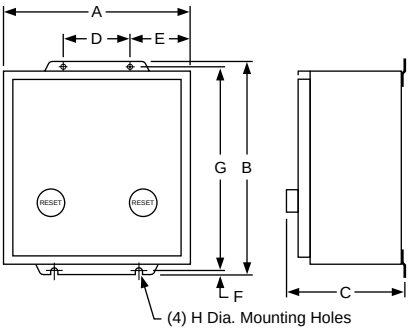

Figure 2

NEMA Type 1 Enclosure – Figure 2

Type	A		B		C		D		E		F		G		H	
	IN	mm	IN	mm	IN	mm	IN	mm	IN	mm	IN	mm	IN	mm	IN	mm
SBA and SCA	11.88	302	13.50	343	7.75	197	4.25	108	3.81	97	.38	10	12.75	324	.31	8
SDA	14.88	378	15.75	400	7.88	200	4.25	108	5.31	135	.38	10	15.00	381	.31	8
SEA-3 & -4 and SFA-3 & -4	18.16	461	31.50	800	9.59	244	16.00	406	3.09	78	.50	13	30.50	775	.44	11
SEA-1 & -2 and SFA-1 & -2	22.16	563	41.50	1054	10.59	269	16.00	406	3.09	78	.50	13	40.50	1029	.44	11
SGA-1, 2, 3, 4	35.22	895	49.00	1245	13.11	333	27.00	686	4.11	104	.50	13	48.00	1219	.56	14
SHA-1, 2, 3, 4	36.22	920	62.22	1580	19.47	495	Floor Mount									
SJA-3 & 4	Consult Square D															

© 1998 Square D All Rights Reserved

Non-Reversing — Non-Combination — Enclosed

Approximate Dimensions

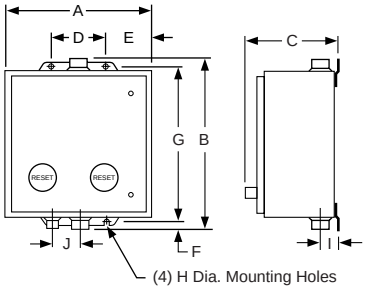

Figure 3

NEMA Type 4 Enclosure – Figure 3

Type	A		B		C		D		E		F		G		H		I		J	
	IN	mm	IN	mm	IN	mm	IN	mm	IN	mm	IN	mm	IN	mm	IN	mm	IN	mm	IN	mm
SBW and SCW	12.63	321	14.69	373	7.81	198	4.25	108	4.19	106	.59	15	13.50	343	.31	8	1.66	42	2.31	59
SDW	14.88	378	15.75	400	8.25	210	4.25	108	5.31	135	.38	10	15.00	381	.31	8	2.03	52	2.63	67
SEW-3 & -4 and SFW-3 & -4	18.16	461	32.22	818	8.77	223	12.00	305	3.08	78	.86	22	30.50	775	.44	11	2.58	66	3.19	81
SEW-1 & -2 and SFW-1 & -2	22.16	563	42.22	1072	9.77	248	16.00	406	3.08	78	.86	22	40.50	1029	.44	11	2.33	59	2.89	73
SGW-1, 2, 3, 4	35.22	895	49.22	1250	12.13	308	27.00	686	4.09	104	.61	15	48.00	1219	.56	14	2.98	76	3.50	89

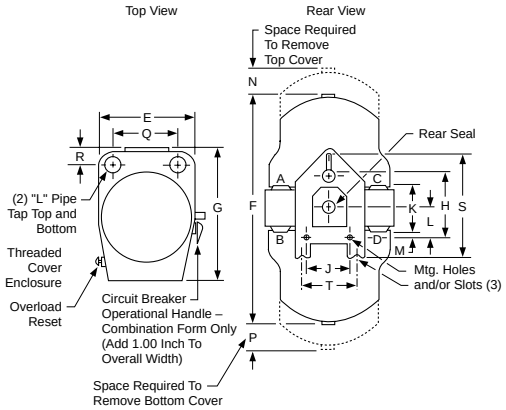

Figure 4

NEMA Type 7 & 9 Enclosure – Figure 4

Type	A		B		C		D		E		F		G		H		J		K		L		M		N		P		R	
	IN	mm	IN	mm	IN	mm	IN	mm	IN	mm	IN	mm	IN	mm	IN	mm	IN	mm	IN	mm	IN	mm	IN	mm	IN	mm	IN	mm	IN	mm
SCR-1, 2, 3 & 4 Std. & Form Y79-1	12.00	305	41.06	1043	68.06	1729	16.75	425	7.25	184	7.69	195	26.13	664	3.00	76	24.00	610	8.50	216	2.06	52	9.38	238	5.25	133	1.50	38	.38	10
SCR-1, 2, 3 & 4 Forms T & TY79-1	12.00	305	46.13	1172	79.13	2010	16.75	425	12.25	311	7.69	195	26.13	664	9.00	229	24.00	610	8.50	216	2.06	52	9.38	238	5.25	133	1.50	38	.38	10
SDR-1, 2, 3 & 4 Std. & Form Y79-1	16.13	410	48.50	1232	81.50	2070	20.25	514	12.50	318	8.63	219	27.75	705	8.00	203	25.00	635	12.00	305	2.63	67	11.00	279	5.50	140	2.50	64	.38	10
SCR-1, 2, 3 & 4 Forms T & Y79-1	16.13	410	50.50	1283	85.00	2159	20.25	514	9.13	232	8.63	219	32.75	832	4.50	114	30.00	762	12.00	305	2.63	67	11.00	279	5.50	140	2.50	64	.38	10

For Sizes 3, 4 and 5 consult Square D field office.

© 1998 Square D All Rights Reserved

AC Two Speed Combination Starters
Disconnect Switch or Circuit Breaker Type – Class 8810, 8811, 8812

"Quick Ship Only"

Approximate Dimensions

NEMA Type 1 Enclosure – Figure 1

NEMA Size	Class	Type	Dimensions — Inches/mm																Top & Bottom		Sides
			A	B	C	D	E	F	G	H	I	J	K	L	M	N	O	P	W	X	Y
0-1	8810	SBG SCG	**13.88** 353	**23.13** 588	**8.25** 210	**10.63** 270	**21.00** 533	**19.28** 490	**1.88** 48	**1.88** 48	**3.75** 95	**2.31** 59	**1.06** 27	**3.30** 84	**2.19** 56	**1.25** 32	**.88** 22	. . .	½-¾-1	½-¾-1	½
2	8810	SDG	**15.16** 385	**28.91** 734	**9.56** 243	**11.63** 295	**26.25** 667	**21.81** 554	**2.19** 56	**2.00** 51	**4.00** 102	**2.63** 67	**1.33** 34	**3.30** 84	**2.22** 56	**1.27** 32	**.91** 23	. . .	1-1¼	½-¾	½

NEMA Type 4 Enclosure – Figure 2

NEMA Size	Class	Type	Dimensions — Inches/mm												Bottom	Top & Bottom
			A	B	C	D	E	F	G	H	I	J	K	L	W	X
0-1	8810	SBW SCW	**13.88** 353	**8.33** 212	**25.19** 640	**3.30** 84	**2.56** 65	**8.75** 222	**24.00** 610	**.59** 15	**3.95** 100	**1.63** 41	**2.31** 59	**18.53** 471	¾ Hub	1 Hub
2	8810	SDW	**15.13** 389	**9.58** 243	**30.94** 786	**3.30** 84	**2.56** 65	**10.00** 254	**29.75** 756	**.59** 15	**3.95** 100	**2.00** 51	**2.63** 67	**21.03** 534	¾ Hub	1½ Hub

NEMA Type 12 Enclosure – Figure 3

NEMA Size	Class	Type	Dimensions — Inches/mm																			
			A		B		C		D		E		F		G		H		I		J	
			IN	mm	IN	mm	IN	mm	IN	mm	IN	mm	IN	mm	IN	mm	IN	mm	IN	mm	IN	mm
0-1	8810	SBA SCA	13.88	353	10.09	256	24.75	629	3.30	84	2.56	65	8.75	222	24.00	610	.38	10	3.95	100	20.28	515
2	8810	SDA	15.16	385	10.97	279	31.25	794	3.30	84	3.08	78	9.00	229	30.25	768	.50	13	4.83	123	23.44	595

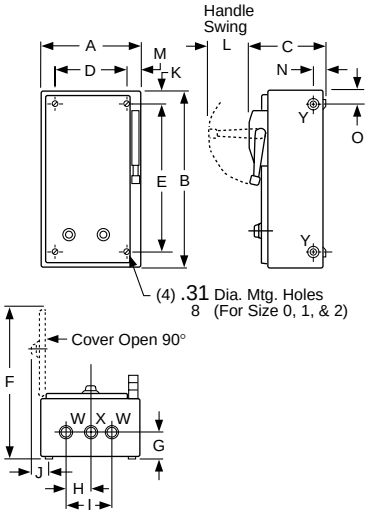

Figure 1
NEMA Type 1 Enclosure

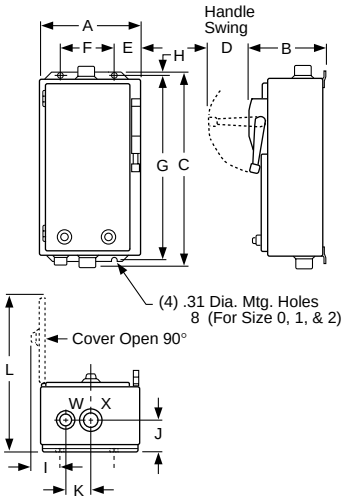

Figure 2
NEMA Type 4 Enclosure

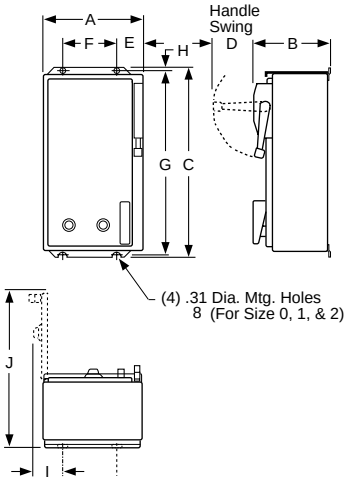

Figure 3
NEMA Type 12 Enclosure

© 1998 Square D All Rights Reserved

Square D Company
8001 Highway 64 East
Knightdale, NC 27545-9023
(919) 266-3671

UL is a registered trademark of Underwriters Laboratories, Inc.
CSA is a registered trademark of Canadian Standards Association.
MOTOR LOGIC is a trademark of Square D Company.
Spin Top, Square D and ⊡ are registered trademarks of Square D Company.

Catalog No. 8502CT9701 May 1998 © 1998 Square D All Rights Reserved.

Attachment G

Electric Panels and Controls

12.00"

5.12"

SIEMENS

Indoor Load Center

Catalog Number	Series	Enclosure
G2020B1100	-	Type 1
G2020B1100CU	-	Type 1
G2020L1125	-	Type 1
G2020L1125CU	-	Type 1

RATINGS:
125A MAXIMUM - SEE MAIN BREAKER RATING IF USED.
BACK-FED BREAKER REQUIRES HOLD-DOWN KIT ECMBR2.
120/240 V~, 60 HZ, 1Ø 3W
208Y/120 V~, 60 HZ, 1Ø 3W

FOR INSTALLATION BY A QUALIFIED PERSON IN ACCORDANCE WITH ALL LOCAL ELECTRICAL CODES AND/OR THE NATIONAL ELECTRICAL CODE ®.

SUITABLE FOR USE AS SERVICE EQUIPMENT WHEN MAIN BREAKER IS INSTALLED. WHEN USED AS SERVICE EQUIPMENT, APPLY "SERVICE DISCONNECT" LABEL TO FRONT NEXT TO MAIN BREAKER HANDLE.

WHEN USED AS SERVICE EQUIPMENT, UNUSED NEUTRAL BAR TERMINALS MAY BE USED TO TERMINATE EQUIPMENT GROUNDING WIRES IN THE COMBINATIONS INDICATED FOR EQUIPMENT GROUND BAR TERMINALS.

IF THE NEUTRAL TIE STRAP IS REMOVED, LUG KIT ECLKB1 MUST BE INSTALLED AND BONDED. THE LEFT NEUTRAL BAR WILL BECOME THE EQUIPMENT GROUND.

TO RESET BREAKERS WITH TRIPPED HANDLE POSITION BETWEEN "ON" AND "OFF", MOVE HANDLE TO "OFF" THEN TO "ON".

Siemens Energy & Automation, Inc. Alpharetta, Georgia U.S.A. J2 4099517 Rev.E

IMPORTANT: DO NOT ALLOW PETROLEUM BASED (HYDROCARBON) SPRAYS, CHEMICALS, SOLVENTS OR ANY PAINT TO CONTACT INTERIOR COMPONENTS. PETROLEUM BASED CHEMICALS CAN CAUSE DEGRADATION OF ELECTRICAL INSULATING MATERIALS.

⚠ DANGER

Hazardous Voltage.
Will cause death, serious injury or substantial property damage.

Turn off power supplying this equipment before working inside.

⚠ PELIGRO

Voltaje peligroso. Causará la muerte, lesiones graves o daño substancial a la propiedad.

Desconecte el suministro de energía a este equipo antes de trabajar en su interior.

SHORT CIRCUIT CURRENT RATING

THIS PANELBOARD HAS A MAXIMUM SHORT CIRCUIT CURRENT RATING OF 100,000 AMPS RMS SYMMETRICAL, 120/240V~. THE ACTUAL RATING IS DEPENDENT ON THE BRANCH BREAKERS INSTALLED IN THIS PANELBOARD AND THE MAIN/FEEDER BREAKER, IF ANY, INSTALLED AHEAD OF THIS PANELBOARD. THE CORRECT MAIN BREAKER/FEEDER/MAIN BREAKER/PANELBOARD MAIN BREAKER/BRANCH BREAKER SERIES COMBINATIONS TO BE USED ARE LISTED IN THE TABULATION BELOW. ANY CIRCUIT BREAKER INSTALLED, REPLACED, OR ADDED IN THIS PANELBOARD MUST BE MANUFACTURED BY SIEMENS AND MUST BE OF THE CORRECT TYPE AS INDICATED IN THE TABULATION BELOW. USE OF OTHER CIRCUIT BREAKERS IN THIS EQUIPMENT WILL VOID THE WARRANTY.

MAIN BREAKER	FEEDER/MAIN BREAKER	PANELBOARD MAIN‡	BRANCH BREAKER	THEN THE MAX. SHORT CIRCUIT CURRENT RATING IN RMS SYMMETRICAL AMPS, 120/240 V~ IS
WHEN THE MAIN PROTECTING THE SYSTEM IS A	AND THE BREAKER PROTECTING THIS PANELBOARD IS A SIEMENS TYPE	AND THE INSTALLED MAIN BREAKER IN THIS PANELBOARD IS A SIEMENS TYPE	AND THE BRANCH BREAKERS INSTALLED ARE SIEMENS TYPE	
NONE USED OR SIEMENS BREAKER TYPES JXD2(-A), JD6(-A), JXD6(-A), HJD6(-A), HJXD6(-A), LD6(-A), LXD6(-A), HLD6(-A), HLXD6(-A), MD6, MXD6, HMD6, HMXD6, ND6, NXD6, HND6, HNXD6, PD6, PXD6, HPD6, HPXD6, RD6, RXD6, HRD6, HRXD6, OR CLASS J, T, R OR L FUSES	QP, BQ, BL	NONE USED, EQ8681, EQ8682 OR QP	QP, QG, QPH, HQP, QPF, QPHF, QFP, QE, QEH, QAF, QAFH	10,000
NONE USED	QPH, BQH, BLH	NONE USED OR EQ8681 OR EQ8682	QP, QPH, HQP, QPF, QPHF, QE, QEH, QAF, QAFH	22,000
NONE USED	NONE USED	EQ8681, EQ8682, QPH		
NONE USED	NONE USED	NONE USED	QPH, QEH, QPHF, QAFH	
SIEMENS BREAKER TYPES JXD2(-A), JD6(-A), JXD6(-A), HJD6(-A), HJXD6(-A), LD6(-A), LXD6(-A), HLD6(-A), HLXD6(-A), MD6, MXD6, HMD6, HMXD6, ND6, NXD6, HND6, HNXD6, PD6, PXD6, HPD6, HPXD6, RD6, RXD6, HRD6, HRXD6, OR CLASS J, T, R OR L FUSES	QPH, BQH, BLH, HQP, HBQ, HBL	NONE USED, EQ8681, EQ8682 OR HQP	QP, QPH, HQP, QPF, QPHF, QE, QEH, QAF, QAFH	65,000
SIEMENS BREAKER TYPE ED4, ED6	NONE USED OR QP, BQ, BL, QPH, BQH, BLH, HQP, HBQ, HBL			
NONE USED	HQP, HBQ, HBL			
	NONE USED	NONE USED	HQP	
SIEMENS BREAKER TYPES HED4, HED6, HFD6, HFXD6	NONE USED OR QP, BQ, BL, QPH, BQH, BLH, HQP, HBQ, HBL	NONE USED OR EQ8681 OR EQ8682	QP, QPH, HQP, QPF, QPHF, QE, QEH, QAF, QAFH	100,000
300V T FUSES - 200A MAX				
300V T FUSES - 600A MAX	QPH, BQH, BLH, HQP, HBQ, HBL			

SR125a

‡ THIS PANELBOARD IS A MAIN LUG DEVICE THAT MAY BE CONVERTED TO MAIN BREAKER WITH THE ADDITION OF FIELD INSTALLED MAIN BREAKER KIT OR A MAIN BREAKER DEVICE THAT MAY BE CONVERTED TO MAIN LUG WITH THE ADDITION OF MAIN LUGS. SEE ACCESSORY TABLE FOR CATALOG NUMBERS OF APPROPRIATE KITS.

REMOVE TWISTOUTS FROM TRIM ONLY WHERE BREAKERS WILL BE INSTALLED. ALL OPENINGS MUST BE FILLED WITH BREAKERS OR FILLER PLATES. USE ONE ECMBF125 FILLER PLATE TO FILL 100-125A MAIN BREAKER OPENING.

THIS LOAD CENTER IS INVERTIBLE FOR BOTTOM FEED APPLICATIONS.

MAIN LUG / MAIN BREAKER KITS	
USE APPROPRIATE KIT FROM CHART BELOW TO CONVERT PANEL	
DESCRIPTION	CAT. NO.
100 AMP MAIN BREAKER	MBK100A
125 AMP MAIN BREAKER	MBK125A
100-125 AMP MAIN LUG	ECMLK125

ACCESSORIES	
DESCRIPTION	CAT. NO.
DOOR LOCK	ECQFL2
FILLER PLATE, 1"	QF3
BREAKER HOLD-DOWN	ECMBR2
MAIN BREAKER FILLER PLATE	ECMBF125
BONDABLE GROUND LUG	ECLKB1
SUBFEED LUG KIT	ECLK2125
STANDBY PWR INTERLOCK KITS: ECSBPK01, ECSBPK02, ECSBPK04	

Assembled in Mexico

© 2005 Copyright Siemens Energy & Automation, Inc.
® The National Electrical Code is a registered trademark of the National Fire Protection Association.

USE COPPER OR ALUMINUM 60°/75°C WIRE

SEE BREAKER MARKINGS FOR WIRE SIZE AND TORQUE REQUIREMENTS.

TERMINALS	WIRE	TORQUE
A, B, N, G	2/0-4 AWG	110 LB-INS
NEUTRAL/GROUND BARS (USE TYPE GB GROUND BAR KIT ACCESSORY)	10-14 CU/10-12 AL 8 AWG 6-4 AWG	20 LB-INS 25 LB-INS 35 LB-INS
GROUND CONDUCTORS ONLY	(2)or(3) 14 AWG (2) 12-10 AWG	20 LB-INS 20 LB-INS
ECLK1-2 NEUTRAL LUG KIT	2/0-2 AWG	45 LB-INS
ECLK2 NEUTRAL LUG KIT	2/0-4 AWG	135 LB-INS
MAIN LUG/MAIN BRKR TO BUS CONNECTION (1/4-20 NUT)		45 LB-INS
BONDING SCREW		45 LB-INS

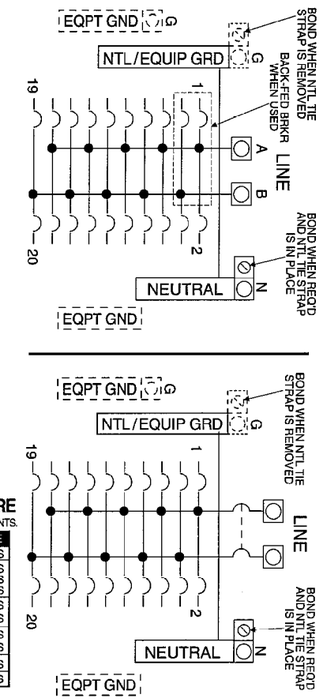

COLOR: PMS485 (RED)

PRINT COLOR: BLACK EXCEPT AS SHOWN

MATERIAL: FASSON UL LITHO 40FS-7305G (SPEC# 10254)

ALTERNATE MAT'L: 60# FASSON CRACK'N'PEEL PLUS, UNCOATED OFFSET, SUPER PERMANENT ADHESIVE WITH 83# LINER

DESIGN RESPONSIBILITY LOCATION:
SEA-NORCROSS

PRINT DISTRIBUTION
ECN COPIES MUST BE ISSUED TO ALL CHECKED LOCATIONS FOR APPROVAL PRIOR TO CHANGE

☐ SEA-TUC	☐ SEA-DRM	☐ McPHER
☐ SEA-NOR	☐ DUR-LEB	☐ CHOICE
☐ SEA-EL	☐ DUR-HOU	☐ IC-ASY
■ SEA-IT2	☐ SEA-BEL	☐ *

1st ARTICLE	EDR NO.	REV	DATE	DESCRIPTION	BY
	05-042-06	E	11/10/05	REVISE FOR TRANSFER TO ITESA2. TRANSFER DES. CONTROL TO NORCROSS.	KAM
	05-046-01	D	10/25/05	UPDATE AND ADD INTERLOCK ACCESS'Y	KAM
	01-080-10	C	6/20/02	ADD LKB1 ACCESSORY AND RELATED INFO	KAM
	01-080-08	B	3/22/02	ADD BACKFED BRKR INFO, 125A BREAKER INFO & OTHER MISC. CHANGES	KAM
	01-080-06	A	1/8/02	ISSUE	KAM

UNLESS OTHERWISE SPECIFIED DIMENSIONS ARE IN INCHES
TOLERANCES:
.XX ±.12
.XXX
HOLE DIAMETER ±.005
ANGULAR
UNDIMENSIONED 90° ANGLES ±0°30'

DWN	KAM	DATE	1/8/02
CHK	CDH	DATE	1/8/02
APVD	CDH	DATE	1/8/02

-CONFIDENTIAL- PROPERTY OF
Siemens Energy & Automation, Inc.
Residential Products Division

WIRING DIAGRAM

SIZE	ISSUE RELEASE NO.	DWG. NO.	REV
B	01-080-06	4099517	E

SCALE 1:1 | DO NOT SCALE DRAWING | SHEET 1 OF 1

Small projects products

For panelboards, surge protection, transformers and switches

Reference guide

Answers for industry.

SIEMENS

Catalog Numbering System
Unassembled Panelboards

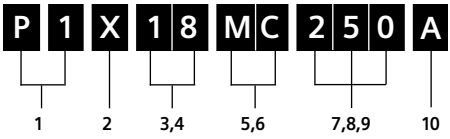

1. **P1**

2. **Voltage and System**
X = 208Y/120, 3 Phase, 4 Wire
A = 120/240V, 1 Phase, 3 Wire
E = 480Y/277V, 3 Phase, 4 Wire

3, 4. **Circuit** – 18, 30, 42

5, 6. **Mains**
MC = Convertible mains
Select Main Lug Kit or Breaker Mounting Kit
Select Main Breaker Kit

7, 8, 9. **Amperage** – 400A Max

10. **Main Bus Material**
A = Tin-plated aluminum
C = Copper Temp. Rated

Type P1 unassembled panelboards are completely convertible from main lug to main breaker and vice-versa. Additionally, feed-thru lugs, or a subfeed circuit breaker up to 400 amperes can be added without increasing the box height. Follow these easy steps to select and price the proper P1 panel from stock:

1. Compute total number of poles to determine interior catalog number.
2. List catalog number and price of interior, box and front.
3. Select main lug kit or main breaker kit from appropriate tables. **Note:** Main/Subfeed Breaker mounting kits may be ordered with or without breakers included.
4. List required branch circuit breakers and filler plates to cover any unused portions.
5. Select any modifications or accessories.

Table of Contents

Enclosures .....

Retrofit Kit .....

Inside Cover .....

Surge Protection .....

Branch Breakers .....

Transformers .....

Breaker Mountings Kits .....

General Duty Safety Switches .....

Accessories/Lugs .....

Heavy Duty Safety Switches .....

Miscellaneous Parts .....

Safety Switch Accessories .....

Enclosures

Type P1 Unassembled Panelboards

Enclosures

Height Inches	Type 1 Trim Surface	Type 1 Trim Flush	Boxes	Type 3R/12 [1] [2]
32	**S32B**	**F32B**	**B32**	**WP32**
38	**S38B**	**F38B**	**B38**	**WP38**
44	**S44B**	**F44B**	**B44**	**WP44**
56	**S56B**	**F56B**	**B56**	**WP56**
62	**S62B**	**F62B**	**B62**	**WP62**
68	**S68B**	**F68B**	**B68**	**WP68**

1 3R/12 enclosures are complete and do not require a trim.

2 Enclosure height is directly related to the P1 panel maximum amperage and branch circuits (poles). P1 250 amp maximum can heights are 32", 38" and 44" respectfully. P1 400 amp maximum panels heights are 56", 62" and 68" for 18, 30 and 42 circuit panels respectfully.

Inside Cover

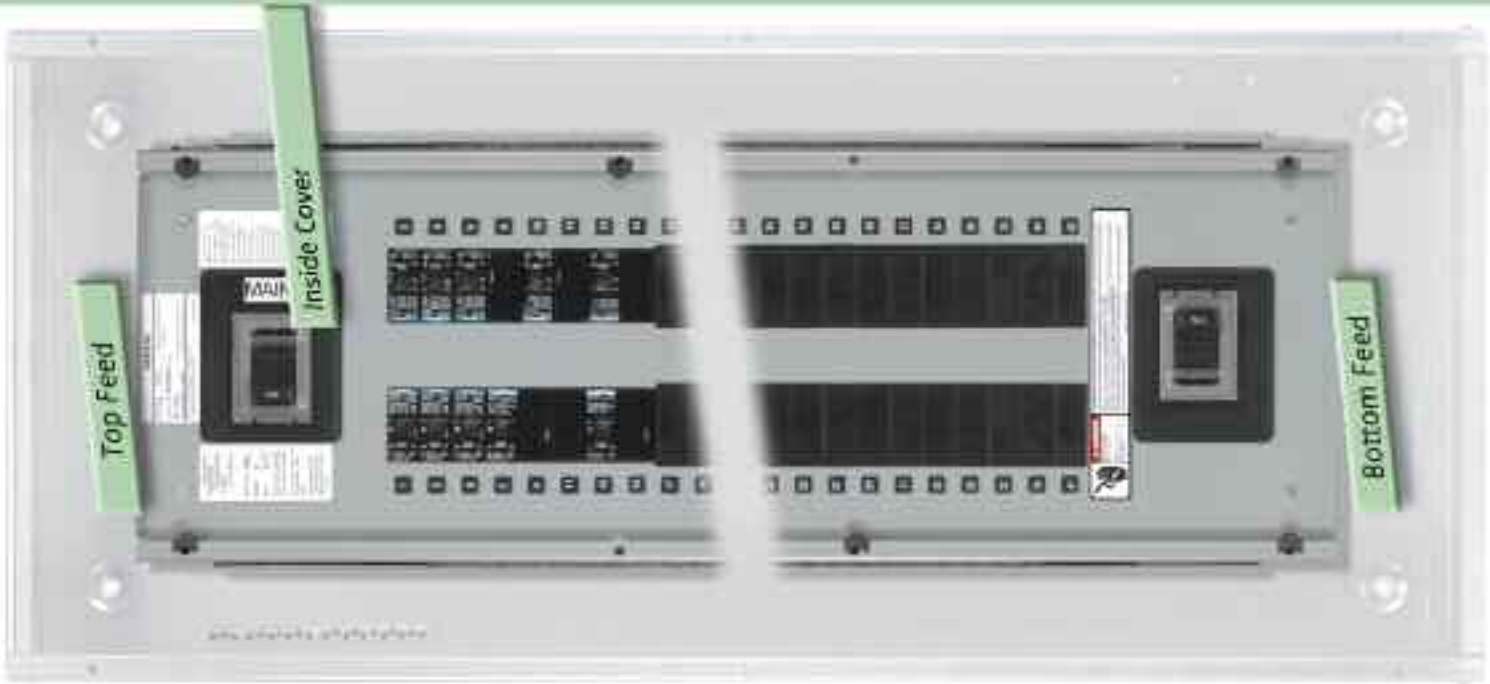

Type P1 Unassembled Panelboards

Interiors Only – Less Branch Breakers

1 Phase, 3 Wire — **120/240V**

Ampere Rating Mains	Max. No. of Poles	Interiors	Material
	18	P1A18MC250A	
250	30	P1A30MC250A	Aluminum
	42	P1A42MC250A	
	18	P1A18MC400A	
400	30	P1A30MC400A	Aluminum
	42	P1A42MC400A	
	18	P1A18MC250C	
250	30	P1A30MC250C	Copper
	42	P1A42MC250C	
	18	P1A18MC400C	
400	30	P1A30MC400C	Copper
	42	P1A42MC400C	

3 Phase, 4 Wire — **208Y/120V**

	18	P1X18MC250A	
250	30	P1X30MC250A	Aluminum
	42	P1X42MC250A	
	18	P1X18MC400A	
400	30	P1X30MC400A	Aluminum
	42	P1X42MC400A	
	18	P1X18MC250C	
250	30	P1X30MC250C	Copper
	42	P1X42MC250C	
	18	P1X18MC400C	
400	30	P1X30MC400C	Copper
	42	P1X42MC400C	

3 Phase, 4 Wire — **480Y/277V**

	18	P1E18MC250A	
250	30	P1E30MC250A	Aluminum
	42	P1E42MC250A	
	18	P1E18MC400A	
400	30	P1E30MC400A	Aluminum
	42	P1E42MC400A	
	18	P1E18MC250C	
250	30	P1E30MC250C	Copper
	42	P1E42MC250C	
	18	P1E18MC400C	
400	30	P1E30MC400C	Copper
	42	P1E42MC400C	

Interiors Only, for NGB Breakers – Less Branch Breakers

Ampere Rating Mains	Max. No. of Poles	Interiors	Material
	18	P1718MC250A	Aluminum
250	30	P1730MC250A	Aluminum
	42	P1742MC250A	Aluminum
	18	P1718MC250C	Copper
250	30	P1730MC250C	Copper
	42	P1742MC250C	Copper
	18	P1718MC400A	Aluminum
400	30	P1730MC400A	Aluminum
	42	P1742MC400A	Aluminum
	18	P1718MC400C	Copper
400	30	P1730MC400C	Copper
	42	P1742MC400C	Copper

Branch Breakers

Branch Breakers Selection for P1

BL Branch Breakers – 10,000A IR

Amp Rating	1-Pole 120/240V	2-Pole 120/240V	2-Pole 240V	3-Pole 240V
15	B115	B215	B215R	B315
20	B120	B220	B220R	B320
25	B125	B225	B225R	B325
30	B130	B230	B230R	B330
35	B135	B235	B235R	B335
40	B140	B240	B240R	B340
45	B145	B245	B245R	B345
50	B150	B250	B250R	B350
55	B155	—	—	—
60	B160	B260	B260R	B360
70	B170	B270	B270R	B370
80	—	B280	B280R	B380
90	—	B290	B290R	B390
100	—	B2100	B2100R	B3100
110	—	B2110	—	—
125	—	B2125	—	—

BLH Branch Breakers – 22,000A IR

Amp Rating	1-Pole 120/240V	2-Pole 120/240V	3-Pole 240V
15	B115H	B215H	B315H
20	B120H	B220H	B320H
25	B125H	B225H	B325H
30	B130H	B230H	B330H
40	B140H	B240H	B340H
50	B150H	B250H	B350H
55	B155H	—	—
60	B160H	B260H	B360H
70	B170H	B270H	B370H
80	—	B280H	B380H
90	—	B290H	B390H
100	—	B2100H	B3100H

HBL Branch Breakers – 65,000A IR

15	B115HH	B215HH	B315HH
20	B120HH	B220HH	B320HH
30	B130HH	B230HH	B330HH
40	B140HH	B240HH	B340HH
50	B150HH	B250HH	B350HH
60	—	B260HH	B360HH
70	—	B270HH	B370HH
80	—	B280HH	B380HH
90	—	B290HH	B390HH
100	—	B2100HH	B3100HH

BQD Branch Breakers – 14,000A IR Max. @ 480/277V AC
65,000A IR max. @ 240V AC

Amp Rating	1-Pole 277V	2-Pole 480Y/277V	3-Pole 480Y/277V
15	BQD115	BQD215	BQD315
20	BQD120	BQD220	BQD320
25	BQD125	BQD225	BQD325
30	BQD130	BQD230	BQD330
35	BQD135	BQD235	BQD335
40	BQD140	BQD240	BQD340
45	BQD145	BQD245	BQD345
50	BQD150	BQD250	BQD350
60	BQD160	BQD260	BQD360
70	BQD170	BQD270	BQD370
80	BQD180	BQD280	BQD380
90	BQD190	BQD290	BQD390
100	BQD1100	BQD2100	BQD3100

Type NGB (480/277V AC) 25,000A IR max. @480/277V AC
100,000A IR @ 240V AC

Amp Rating	1-Pole	2-Pole	3-Pole
15	NGB1B015B	NGB2B015B	NGB3B015B
20	NGB1B020B	NGB2B020B	NGB3B020B
25	NGB1B025B	NGB2B025B	NGB3B025B
30	NGB1B030B	NGB2B030B	NGB3B030B
35	NGB1B035B	NGB2B035B	NGB3B035B
40	NGB1B040B	NGB2B040B	NGB3B040B
45	NGB1B045B	NGB2B045B	NGB3B045B
50	NGB1B050B	NGB2B050B	NGB3B050B
60	NGB1B060B	NGB2B060B	NGB3B060B
70	NGB1B070B	NGB2B070B	NGB3B070B
80	NGB1B080B	NGB2B080B	NGB3B080B
90	NGB1B090B	NGB2B090B	NGB3B090B
100	NGB1B100B	NGB2B100B	NGB3B100B
110	NGB1B110B	NGB2B110B	NGB3B110B
125	NGB1B125B	NGB2B125B	NGB3B125B

GFCI Personnel Protection (5MA)

Breaker Type	Ampere Rating	Catalog Number	Interrupting Ratings (kA) (RMS Symmetrical Amperes) Volts AC 120	120/240	240
BLF 1-Pole	15	BF115	10	—	—
	20	BF120	10	—	—
	25	BF125 ■	10	—	—
	30	BF130	10	—	—
BLF 2-Pole	15	BF215	—	10	—
	20	BF220	—	10	—
	30	BF230	—	10	—
	40	BF240 ■	—	10	—
	50	BF250 ■	—	10	—
	60	BF260 ■	—	10	—
BLHF 1-Pole	15	BF115H	22	—	—
	20	BF120H	22	—	—
	30	BF130H ■	22	—	—
BLHF 2-Pole	15	BF215H ■	—	22	—
	20	BF220H ■	—	22	—
	30	BF230H ■	—	22	—
	40	BF240H ■	—	22	—
	50	BF250H ■	—	22	—
	60	BF260H ■	—	22	—

■ Built to order. Allow 2-3 weeks for delivery.

EQF Equipment Protection (30MA)

Breaker Type	Ampere Rating	Catalog Number	Interrupting Ratings (kA) (RMS Symmetrical Amperes) Volts AC 120	120/240	240
BLE 1-Pole 120V AC	15	**BE115** ■	10	—	—
	20	**BE120**	10	—	—
	30	**BE130**	10	—	—
BLE 2-Pole 120/240V AC	15	**BE215** ■	—	10	—
	20	**BE220**	—	10	—
	30	**BE230**	—	10	—
	40	**BE240** ■	—	10	—
	50	**BE250** ■	—	10	—
	60	**BE260** ■	—	10	—
BLEH 1-Pole	15	**BE115H** ■	22	—	—
	20	**BE120H** ■	22	—	—
	30	**BE130H** ■	22	—	—
BLEH 2-Pole	15	**BE215H** ■	—	22	—
	20	**BE220H** ■	—	22	—
	30	**BE230H** ■	—	22	—
	40	**BE240H** ■	—	22	—
	50	**BE250H** ■	—	22	—
	60	**BE260H** ■	—	22	—

ACFI – Combination Type Arc Fault Circuit Interrupter

BAFC 1-Pole	15	**B115AFC**	10	—	—
	20	**B120AFC**	10	—	—
BAFCH 1-Pole	15	**B115AFH**	22	—	—
	20	**B120AFH**	22	—	—

AFCI – Branch Feeder Type Arc Fault Circuit Interrupter

BAF 1-Pole	15	**B115AF**	10	—	—
	20	**B120AF**	10	—	—
BAFH 1-Pole	15	**B115AFCH**	22	—	—
	20	**B120AFCH**	22	—	—

HID Lighting [1]

BL 1-Pole	15	**B115HID** [2] ■	10	—	—
	20	**B120HID** [2]	10	—	—
	30	**B130HID** ■	10	—	—
BL 2-Pole	15	**B215HID** [2] ■	—	10	—
	20	**B220HID** [3]	—	10	—
	30	**B230HID** ■	—	10	—

Switching Neutrals [1]

Breaker Type	Ampere Rating	Catalog Number	Interrupting Ratings (kA) (RMS Symmetrical Amperes) Volts AC 120	120/240	240
BG 2 Wire Common Trip	15	**BG215** ■	10	—	—
	20	**BG220** ■	10	—	—
	30	**BG230** ■	10	—	—
BG 3 Wire Common Trip	15	**BG315** ■	—	10	—
	20	**BG320** ■	—	10	—
	30	**BG330** ■	—	10	—

■ Built to order. Allow 2-3 weeks for delivery.
1 HACR rated
2 Meets 2008 NEC Section 210-12.
3 UL listed for frequent switching applications (SWD). 120V AC fluorescent lighting.

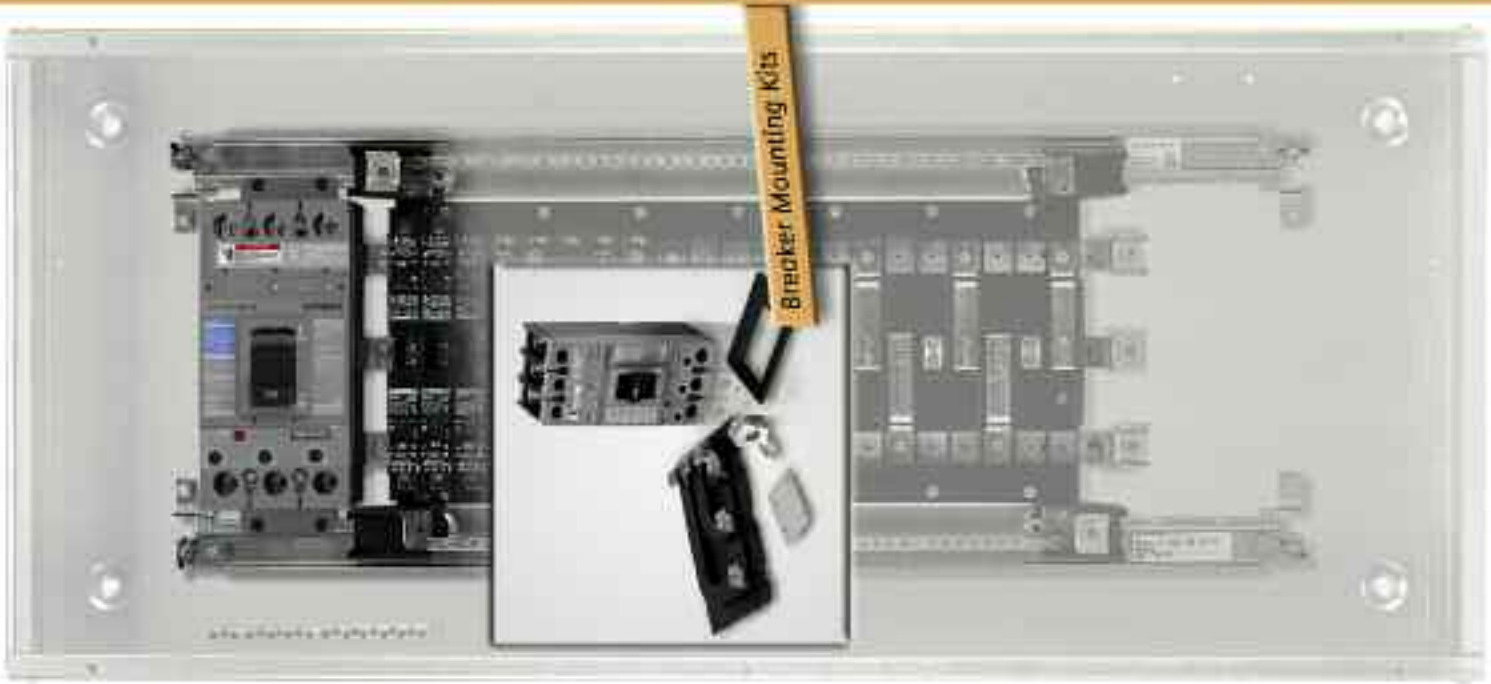
Breaker Mounting Kits

Breaker Mounting Kits

250A Max. – Main or Subfeed without Breaker

Ampere Rating	Breaker Type	Service	Catalog Number
100	BQD	3 Phase	**MBKBC3**
100	BL, BLH, HBL	1 Phase	**MBKBL1**
		3 Phase	**MBKBL3**
125	ED2, ED4, ED6, HED4, HED6	1 Phase	**MBKED1**
		3 Phase	**MBKED3**
125A	NGB	1 phase	**MBKNB1**
		3 phase	**MBKNB3**
225	QJ2, QJH2, QJ2-H	1 Phase	**MBKQJ1**
		3 Phase	**MBKQJ3**
250 [1]	FXD6, FD6, HFD6	1 Phase	**MBKFD1**
		3 Phase	**MBKFD3**
400 [1]	JD6, JXD6,	1 Phase	**MBKJD1**
	HJD6, HJXD6	3 Phase	**MBKJD3**

Note: 400 amp kit is for main only – not allowed for subfeed breaker.

[1] Order 1 lug per pole of breaker part number
TA1FD350A (250A frames)
TA2J6500 (400A frames)

Breaker Mounting Kits With Breakers for P1 Panels

Catalog Number	Description	Rating 240V	Rating 480V
MBKED3100	Kit with 3 pole ED4 100 amp breaker	65kA	18kA
MBKED3125	Kit with 3 pole ED4 125 amp breaker	65kA	18kA
MBKQJ1125	Kit with 2 pole QJ2 125 amp breaker	10kA	—
MBKQJ1150	Kit with 2 pole QJ2 150 amp breaker	10kA	—
MBKQJ1175	Kit with 2 pole QJ2 175 amp breaker	10kA	—
MBKQJ1200	Kit with 2 pole QJ2 200 amp breaker	10kA	—
MBKQJ1225	Kit with 2 pole QJ2 225 amp breaker	10kA	—
MBKQJ3125	Kit with 3 pole QJ2 125 amp breaker	10kA	—
MBKQJ3150	Kit with 3 pole QJ2 150 amp breaker	10kA	—
MBKQJ3175	Kit with 3 pole QJ2 175 amp breaker	10kA	—
MBKQJ3200	Kit with 3 pole QJ2 200 amp breaker	10kA	—
MBKQJ3225	Kit with 3 pole QJ2 225 amp breaker	10kA	—
MBKQJ1125H	Kit with 2 pole QJ2H 125 amp breaker	42kA	—
MBKQJ1150H	Kit with 2 pole QJ2H 150 amp breaker	42kA	—
MBKQJ1175H	Kit with 2 pole QJ2H 175 amp breaker	42kA	—
MBKQJ1200H	Kit with 2 pole QJ2H 200 amp breaker	42kA	—
MBKQJ1225H	Kit with 2 pole QJ2H 225 amp breaker	42kA	—
MBKQJ3125H	Kit with 3 pole QJ2H 125 amp breaker	42kA	—
MBKQJ3150H	Kit with 3 pole QJ2H 150 amp breaker	42kA	—
MBKQJ3175H	Kit with 3 pole QJ2H 175 amp breaker	42kA	—
MBKQJ3200H	Kit with 3 pole QJ2H 200 amp breaker	42kA	—
MBKQJ3225H	Kit with 3 pole QJ2H 225 amp breaker	42kA	—
MBKFD3150	Kit with 3 pole FXD6 150 amp breaker	65kA	35kA
MBKFD3175	Kit with 3 pole FXD6 175 amp breaker	65kA	35kA
MBKFD3200	Kit with 3 pole FXD6 200 amp breaker	65kA	35kA
MBKFD3225	Kit with 3 pole FXD6 225 amp breaker	65kA	35kA
MBKFD3250	Kit with 3 pole FXD6 250 amp breaker	65kA	35kA
MBKJD1300	Kit with 2 pole JXD6 300 amp breaker	65kA	35kA
MBKJD3300	Kit with 3 pole JXD6 300 amp breaker	65kA	35kA
MBKJD1400	Kit with 2 pole JXD6 400 amp breaker	65kA	35kA
MBKJD3400	Kit with 3 pole JXD6 400 amp breaker	65kA	35kA

Note: 400 amp kits stocked as Top Fed only. Others are available, please contact your sales office.

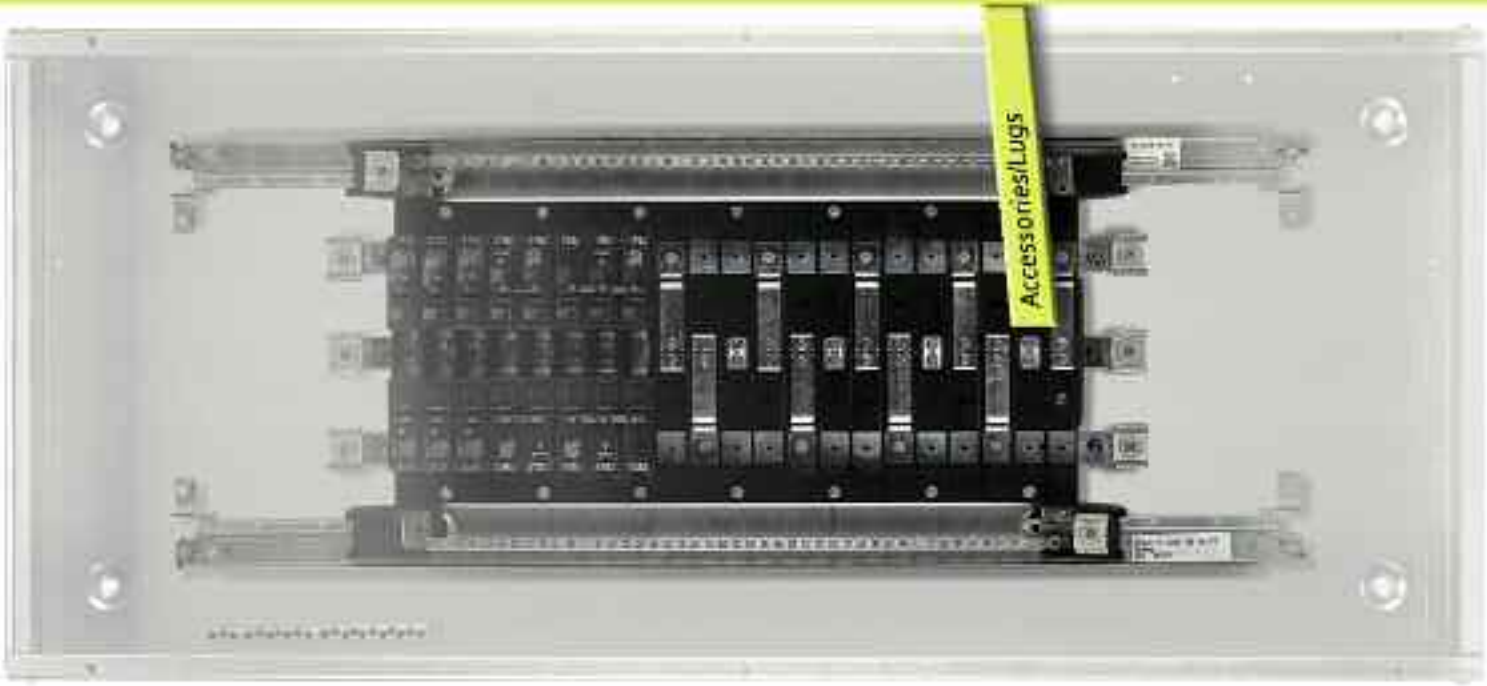
Accessories/Lugs

Lug Kits – Main or Feed-Thru

Amp Rating	Material	Wire Range	Service	Catalog Number
125/250	Al/Cu	(2) 1/0-250 kcmil	1 Phase	**MLKA1**
125/250	Al/Cu	(2) 1/0-250 kcmil	3 Phase	**MLKA3**
400A/600	Al/Cu	(2) #4-250 kcmil or (1) 3/0-500 kcmil	1 Phase	**SMLKA1**
400A/600	Al/Cu	(2) #4-250 kcmil or (1) 3/0-500 kcmil	3 Phase	**SMLKA3**

Neutral Kits

Maximum Amp Rating	Description	Catalog Number
250	30/42 circuit 200% neutral kit	**2NLK2**
400/600	42 circuit 200% neutral kit	**2NLK1**

Lug Kits – Main or Feed-Thru

Amp Rating	Material	Wire Range	Service	Catalog Number
250	Al	(1) #6 AWG - 350 kcmil	1 Phase	**MLKA1**
		(1) #6 AWG - 350 kcmil	3 Phase	**MLKA3**
	Cu	(1) #6 AWG - 350 Kcmil	1 Phase	**MLKC1**
		(1) #6 AWG - 350 kcmil	3 Phase	**MLKC3**
400	Al	(2) 3/0 250 or	1 Phase	**4MLKA1**
		(1) 600 kcmil	3 Phase	**4MLKA3**
	Cu	(2) 3/0 250 or	1 Phase	**4MLKC1**
		(1) 600 kcmil	3 Phase	**4MLKC3**

Copper Neutral Lugs Kits – 250A

Number of Circuits	Description	Catalog Number
18	2 Branch Neutral Strips, 1 Main Neutral Lug, Hardware	**CNLK18**
30	2 Branch Neutral Strips, 1 Main Neutral Lug, Hardware	**CNLK30**
42	2 Branch Neutral Strips, 1 Main Neutral Lug, Hardware	**CNLK42**

200% Neutral Lug Kits – 250A

Number of Circuits	Description	Catalog Number
18	2 Branch Neutral Strips, 2 Main Neutral Lugs, Hardware	**2NLK18**
30	2 Branch Neutral Strips, 2 Main Neutral Lugs, Hardware	**2NLK30**
42	2 Branch Neutral Strips, 2 Main Neutral Lugs, Hardware	**2NLK42**

200% Neutral Lug Kits – 400A

18	2 Branch Neutral Strips, 2 Main Neutral Lugs, Hardware	**42NLK18**
30	2 Branch Neutral Strips, 2 Main Neutral Lugs, Hardware	**42NLK30**
42	2 Branch Neutral Strips, 2 Main Neutral Lugs, Hardware	**42NLK42**

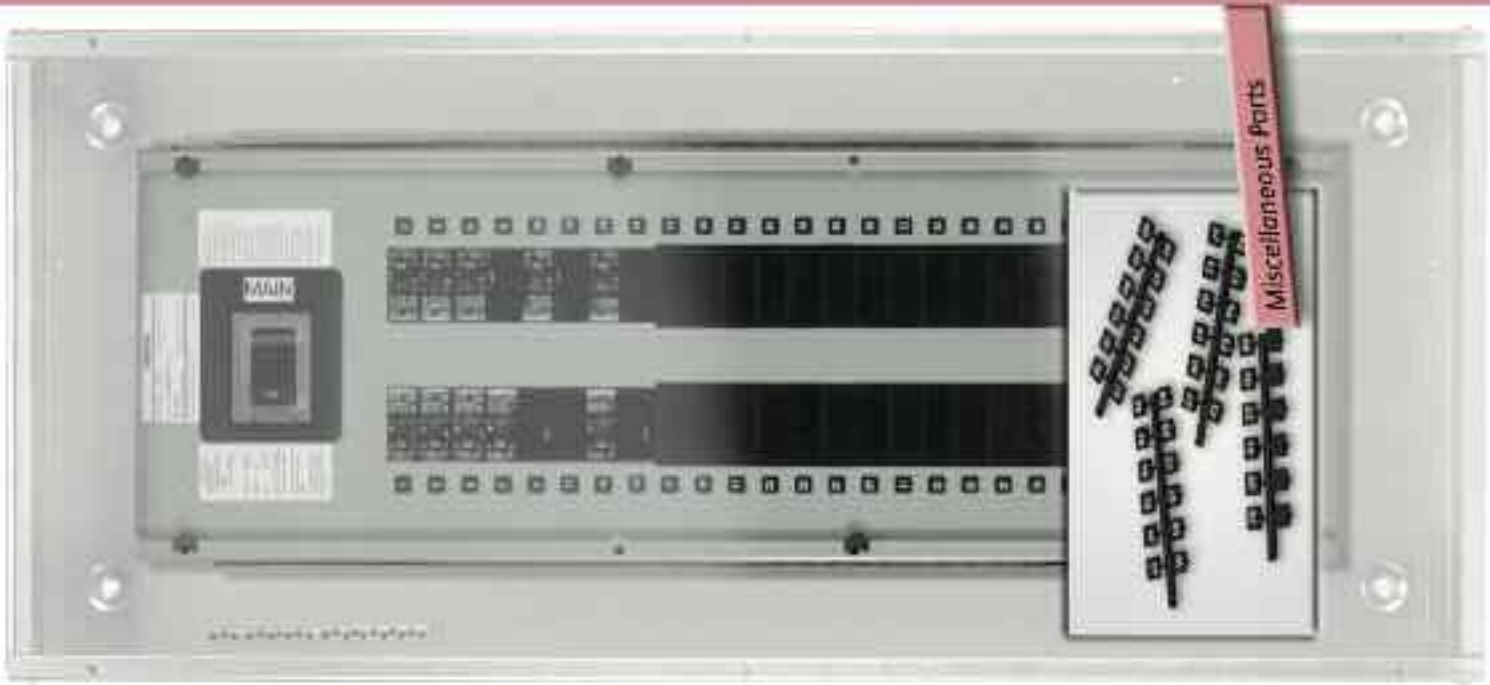
MAIN
Miscellaneous Parts

Type P1, P2, P3, SE and S3 Panelboards

Miscellaneous Parts and Accessories

Catalog Number	Description
EGK [1]	Al Ground Bus 44 Connections
BK1	Bonding Kit for S1/S2 250A Max. and all P1 panels
BK2	Bonding Kit for SE and S1/S2 400 and 600
BK3	Bonding Kit for S3
P2BK1	Bonding Kit for P2 250A Max.
P2BK2	Bonding Kit for P2 400A Max.
P2BK3	Bonding Kit for P2 600A Max.
P3BK1	Bonding Kit for P3
IMK1	Interior Adjusting Kit
11-1824-01	Directory Card Holder
12-1110-01	Directory Card
11-1056-01	NEMA Instruction Book
NBK03 [2]	Circuit Number Stickers 1 – 42
NBK04	Circuit Number Buttons 43 – 84
NBK05 [3]	Circuit Number Buttons 85 – 126
NBK06 [3]	Circuit Number Buttons 127 – 168
NBK3 [3]	Circuit Number Buttons 1-42
ECGK [1]	Cu Ground Bus 44 Connections
IGK	Insulated Al Ground Bus
ICGK	Insulated Cu Ground Bus
EWK1	End Wall Kit with Knockouts (20” W X 5.75” DP)
EWK2	End Wall Kit with Knockouts (24” W X 7.75” DP)
QF3 [1]	Filler Plate
EBF1	NEB/HEB Filler Plate

1 When ordering unassembled version, do not forget to price ground bar and QF3 filler plates. One (1) filler plate needed for every circuit not filled by a breaker.
2 Circuit number stickers kit NBK03 is for P1 only.
3 Number Buttons NBK3, NBK05 and NBK06 are for P2, P3, SE and S3 panelboards only.

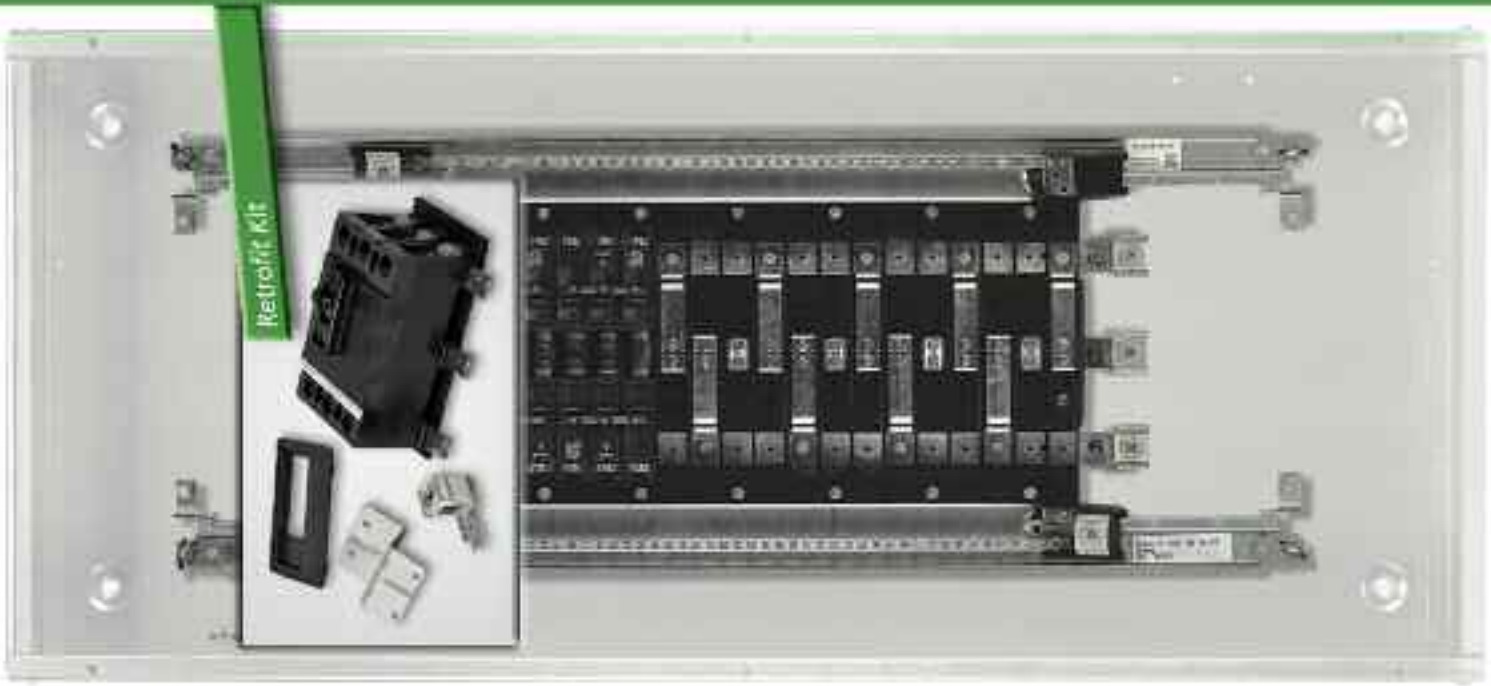
Retrofit Kit

Retrofit Kits

400/600A S1/S2 and All SE Panels

Amp Rating	Breaker Type	Service	Catalog Number
125	ED2, ED4, ED6, HED4, HED6, HHED6	1 Phase	**SMBKED1**
225	ED2, ED4, ED6, HED4, HED6, HHED6	3 Phase	**SMBKED3**
225	QJ2, HQJ2, HQJ2H	1 Phase	**SMBKQJ1**
	QJ2, HQJ2, HQJ2H	3 Phase	**SMBKQJ3**
250	FXD6, FD6, HFXD6, HFD6	1 Phase	**SMBKFD1**
	FXD6, FD6, HFXD6, HFD6	3 Phase	**SMBKFD3**
400	JD6, JXD6, HJD6, HJXD6	1 Phase	**SMBKJD1**
	JD6, JXD6, HJD6, HJXD6	3 Phase	**SMBKJD3**
600	LD6, LXD6, HLD6, HLXD6	1 Phase	**SMBKLD1**
	LD6, LXD6, HLD6, HLXD6	3 Phase	**SMBKLD3**

SPP/FPP/S4/S5/P4/P5/F1/F2 Kits

Breaker Type	Mounting	Unit Height Inches	Category 1 10" Deep S4/P4/SPP FPP/P1	Category 2 12.75" Deep S5/P5/F2 SPP/FPP
BL/BQD	Twin	3.75	**SBL**	**SBLBD**
ED	Twin	3.75	**SE6**	**SE6D**
CED6	Single	3.75	**SCE**	**SCED**
QJ	Twin	5.00	**SQJ**	**SQJD**
FD6	Twin	5.00	**SF6**	**SF6D**
CFD6	Single	5.00	**SCF**	**SCFD**
JXD2, JXD6	Single	8.75	**SJ1**	**SJ1D**
JXD2, JXD6	Twin	8.75	**—**	**SJ2D**
SJD6	Single	8.75	**SSJ1**	**SSJ1D**
CJD6	Single	8.75	**SCJ**	**SCJD**
SCJD6	Single	8.75	**SSCJ**	**SSCJD**
LD6	Single	8.75	**SL6**	**SL6D**
SLD6	Single	8.75	**SSL6**	**SSL6D**
CLD6	Single	8.75	**SCL**	**SCLD**
SCLD6	Single	8.75	**SSCL**	**SSCLD**
LMD6, HLMD6	Single	8.75	**SLM1**	**SLM1D**
MD6, HMD6, CMD6	Single	10	**—**	**SMND**
SMD6, SHMD6	Single	10	**—**	**SSMND**
ND6, HND6	Single	10	**—**	**SMND**
SND6, SHND6	Single	10	**—**	**SSMND**
SCND6				
MG1D	Single	10	—	**NM, HM, LM, SNM, SHM**
NG1D	Single	10	—	**NN, HN, LN, SNN, SHN**

P2/P3 Kits and Accessories

Kit Number	Description
BBKB32	BL/BQD 6-pole 3" branch breaker kit
BBKED32	ED 6-pole 3" branch breaker kit
BBKQ1	QJ branch breaker kit for 2 and 3-pole single mount
BBKQ2	Branch breaker kit for 2 and 3-pole QJ twin mount (P3)
DKF1	BL, BQD, ED deadfront kit for 1" pole breakers
DFFP3	Deadfront filler 3"
DFFP6	Deadfront filler 6"
BNK2	Branch Neutral (P2)
P2BK1	P2 250A max. bonding kit
P2BK2	P2 400A max. bonding kit
P2BK3	P2 600A max. bonding kit
P3BK1	P3 bonding kit

Surge Protection
CAUTION

Internal TPS

All internal TPS standard monitoring includes LED Indicators

TPS3 01, L1, 05, L5, 06, L6 standard monitoring includes:
- LED indicators
- Audible Alarm with Silence and Test Buttons
- Dry Contacts

TPS3 01 Surge Protection Device (SPD) for P1, P2 Lighting Panelboards and P3 Power Distribution Panelboards, Motor Control Centers and Busway Systems

Mounts internal to:
- P1, P2 and P3 panels
- tiastar motor control centers – standard 6" bucket
- STP series busplug on SX series busway

Ordering Information – When an option is not selected, put a zero (0) in the field.

1. Voltage Code
A = 120/240V, 1Ø, 3W
B = 120/240V, 3Ø, 4W
C = 120/208V, 3Ø, 4W
D = 240V, 3Ø, 3W
E = 277/480V, 3Ø, 4W
F = 480V, 3Ø, 3W
G = 600V, 3Ø, 3W
K = 380/220V, 3Ø, 4W
L = 600/347V, 3Ø, 4W
S = 400/230V, 3Ø, 4W

2. Surge Current (kA)
10 = 100kA per phase
15 = 150kA per phase
20 = 200kA per phase
25 = 250kA per phase
30 = 300kA per phase

3. Options
X = Surge counter
W = Terminal lug
B = Busway application
M = MCC application

Available accessories ordered separately. RMSIE – Remote monitor.

Example: TPS3C0120X00 = SPD for a 208/120V panelboard with a surge capacity of 200kA per phase and a surge counter option.

TPS3 L1 True 10 Mode Protection, Surge Protection Device (SPD) for P1, P2 Lighting and P3 Power Distribution Panelboards, Motor Control Centers and Busway Systems

Mounts internal to:
- P1, P2 and P3 panels
- tiastar motor control centers – standard 6" bucket
- STP series busplug on SX series busway

Ordering Information – When an option is not selected, put a zero (0) in the field.

1. Voltage Code
A = 120/240V, 1Ø, 3W
B = 120/240V, 3Ø, 4W
C = 120/208V, 3Ø, 4W
E = 277/480V, 3Ø, 4W
K = 380/220V, 3Ø, 4W
S = 400/230V, 3Ø, 4W

2. Surge Current (kA)
15 = 150kA per phase
30 = 300kA per phase

3. Options
X = Surge counter
W = Terminal lug
B = Busway application
M = MCC application

Available accessories ordered separately. RMSIE – Remote monitor.

Example: TPS3CL130X00 = 10 Mode SPD for a 208/120V panelboard with a surge current capacity of 300kA per phase and a surge counter option.

TPS3 05 Surge Protection Device (SPD) for P4 and P5 Panelboards and Distribution Switchboards

Mounts internal to:
- P4 and P5 panelboards and distribution switchboards

Ordering Information – When an option is not selected, put a zero (0) in the field.

T P S 3 [ ] 0 5 [ ] [ ] [ ]

1 2 3

1. Voltage Code
A = 120/240V, 1Ø, 3W
B = 240/120V, 3Ø, 4W
C = 120/208V, 3Ø, 4W
D = 240V, 3Ø, 3W
E = 277/480V, 3Ø, 4W
F = 480V, 3Ø, 3W
G = 600V, 3Ø, 3W [1]
K = 380/220V, 3Ø, 4W
L = 600/347V, 3Ø, 4W
S = 400/230V, 3Ø, 4W

2. Surge Current (kA)
10 = 100kA per phase
15 = 150kA per phase
20 = 200kA per phase
25 = 250kA per phase
30 = 300kA per phase

3. Options
X = Surge Counter

[1] Available in 100 and 150 kA only.

Available accessories ordered separately. RMSIE– Remote monitor.

Example: TPS3C0530X = SPD for a 208/120V power panel with a surge current capacity of 300kA per phase and a surge counter option.

TPS3 L5 True 10 Mode Protection
Surge Protection Device (SPD) for P4 and P5 Panelboards and Distribution Switchboards

Mounts internal to:
- P4 and P5 panelboards and distribution switchboards

Ordering Information – When an option is not selected, put a zero (0) in the field.

T P S 3 [ ] L 5 [ ] [ ] [ ]

1 2 3

1. Voltage Code
A = 120/240V, 1Ø, 3W
B = 120/240V, 3Ø, 4W
C = 120/208V, 3Ø, 4W
E = 277/480V, 3Ø, 4W
K = 380/220V, 3Ø, 4W
S = 400/230V, 3Ø, 4W

2. Surge Current (kA)
15 = 150kA per phase
30 = 300kA per phase

3. Options
X = Surge Counter

Available accessories ordered separately. RMSIE – Remote monitor.

Example: TPS3CL530X = 10 mode SPD for a 208/120V power panel with a surge current capacity of 300kA per phase and a surge counter option

TPS3 06 Surge Protection Device (SPD) for Service Entrance Applications – SB1, SB2, SB3, Type RCS Switchboards, Type WL Low Voltage Switchgear, Motor Control Centers and Busway Systems

Mounts internal to:
- SB1, SB2, SB3 and Type RCS switchboards
- Type WL low voltage switchgear
- tiastar motor control centers - standard 12" bucket
- STP series busplug on SX series busway

Ordering Information – When an option is not selected, put a zero (0) in the field.

1. Voltage Code
- A = 120/240V, 1Ø, 3W
- B = 120/240V, 3Ø, 4W
- C = 120/208V, 3Ø, 4W
- D = 240V, 3Ø, 3W [1]
- E = 277/480V, 3Ø, 4W
- F = 480V, 3Ø, 3W [1]
- G = 600V, 3Ø, 3W [2]
- K = 380/220V, 3Ø, 4W
- L = 600/347V, 3Ø, 4W
- S = 400/230V, 3Ø, 4W

2. Surge Current (kA)
- 10 = 100kA per phase
- 15 = 150kA per phase
- 20 = 200kA per phase
- 25 = 250kA per phase
- 30 = 300kA per phase
- 40 = 400kA per phase
- 50 = 500kA per phase

3. Options
- X = Surge counter
- B = Busway application [3]
- M = MCC application [3]

[1] Not available in 500 kA.
[2] Available in 150, 200, 250 kA only.
[3] G voltage code only available in 200 and 250 kA.

Available accessories ordered separately. RMSIE – Remote monitor.

Example: TPS3C0640X0 = SPD for a 208/120V switchboard with a surge current capacity of 400kA per phase and a surge counter option.

TPS3 L6 True 10 Mode Protection
Surge Protection Device (SPD) for Service Entrance Applications – SB1, SB2, SB3, Type RCS Switchboards, Type WL Low Voltage Switchgear, Motor Control Centers and Busway Systems

Mounts internal to:
- SB1, SB2, SB3 and Type RCS switchboards
- Type WL low voltage switchgear
- tiastar motor control centers - standard 12" bucket
- STP series busplug on SX series busway

Ordering Information – When an option is not selected, put a zero (0) in the field.

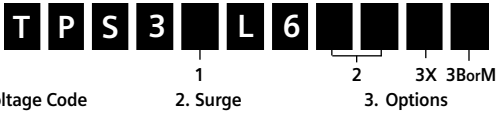

1. Voltage Code
- A = 120/240V, 1Ø, 3W
- B = 120/240V, 3Ø, 4W
- C = 120/208V, 3Ø, 4W
- E = 277/480V, 3Ø, 4W
- K = 380/220V, 3Ø, 4W
- S = 400/230V, 3Ø, 4W

2. Surge Current (kA)
- 15 = 150kA per phase
- 30 = 300kA per phase
- 45 = 450kA per phase

3. Options
- X = Surge counter
- B = Busway application
- M = MCC application

Available accessories ordered separately. RMSIE – Remote monitor.

Example: TPS3CL645X0 = 10 mode SPD for a 208/120V switchboard with a surge current capacity of 450kA per phase and a surge counter option.

External or Wall Mount TPS

All external TPS standard monitoring includes LED indicators

TPS3 03, 09 and 11 standard monitoring include:
- LED Indicators

TPS3 12, and L12 standard monitoring include:
- LED Indicators
- Audible Alarm with Silence and Test Buttons
- Dry Contacts

TPS3 15, and L15 standard monitoring include:
- LED Indicators
- Audible Alarm with Silence and Test Buttons
- Dry Contacts
- Disconnect Switch

TPS3 03
Type 1 Surge Protective Device (SPD)

Mounts external to electrical distribution equipment
- Recommended for line side or load side applications

Ordering Information – When an option is not selected, put a zero (0) in the field.

T P S 3 [ ] 0 3 [ ] [ ] [ ]

1 2 3

1. Voltage Code
A = 120/240V, 1Ø, 3W
B = 120/240V, 3Ø, 4W
C = 120/208V, 3Ø, 4W
D = 240V, 3Ø, 3W
E = 277/480V, 3Ø, 4W
F = 480V, 3Ø, 3W
G = 600V, 3Ø, 3W
K = 380/220V, 3Ø, 4W
L = 600/347V, 3Ø, 4W

2. Surge Current (kA)
05 = 50kA per phase

3. Options
D = Dry contact and audible alarm

Available accessories ordered separately. RMSIE – Remote monitor.

Example: TPS3C0305D = Type 1 SPD for a 208/120V application with a surge current capacity of 50kA per phase, in a standard NEMA 4X enclosure with dry contacts and audible alarm option.

TPS3 09 Type 1 Surge Protective Device (SPD) Internal to P1, P2 Lighting Panelboards, P3 Power Panelboards and Busway Systems

Mounts external to electrical distribution equipment
- Weatherproof hub included
- Recommended for line side or load side applications

Mounts internal to P1 panelboards and busway
- P1 – Field retrofit or factory install
- P2 and P3 – Factory install only

*Consult factory for field retrofit

Ordering Information – When an option is not selected, put a zero (0) in the field.

T	P	S	3	■	0	9	■	■	■	■	■
				1			2		3D	3I	3E

1. Voltage Code
- A = 120/240V, 1Ø, 3W
- B = 120/240V, 3Ø, 4W
- C = 120/208V, 3Ø, 4W
- D = 240V, 3Ø, 3W
- E = 277/480V, 3Ø, 4W
- F = 480V, 3Ø, 3W
- G = 600V, 3Ø, 3W
- K = 380/220V, 3Ø, 4W
- L = 600/347V, 3Ø, 4W
- S = 400/230V, 3Ø, 4W

2. Surge Current (kA)
- 10 = 100kA per phase

3. Options
- D = Dry contact and audible alarm
- I = Internal mounting in P1, P2 panels [1]
- E = Extended indicator light

Available accessories ordered separately.
RMSIE – Remote monitor
FMKITC – Flush mount kit
TPS9IKITP1 – Mounting bracket for installation in P1 panels

[1] Requires TPS9IKITP1 mounting bracket accessory.

Example: TPS3C0910D00 = Type 1 SPD for a 208/120V panelboard with a surge current capacity of 100kA per phase with standard NEMA 4X enclosure, dry contacts and audible alarm option.

TPS3 11 - Type 1 Surge Protection Device (SPD)

Mounts external to electrical distribution equipment
- Recommended for line or load side applications

Ordering Information – When an option is not selected, put a zero (0) in the field.

T	P	S	3	☐	1	1	☐	☐	☐
				1			2		3

1. Voltage Code
A = 120/240V, 1Ø, 3W
B = 120/240V, 3Ø, 4W
C = 120/208V, 3Ø, 4W
D = 240V, 3Ø, 3W
E = 277/480V, 3Ø, 4W
F = 480V, 3Ø, 3W
G = 600V, 3Ø, 3W [1]
K = 380/220V, 3Ø, 4W
L = 600/347V, 3Ø, 4W
S = 400/230V, 3Ø, 4W

2. Surge Current (kA)
10 = 100kA per phase
15 = 150kA per phase
20 = 200kA per phase

3. Options
D = Dry contacts and audible alarm

Available accessories ordered separately.
RMSIE – Remote monitor
KITFMXF – Flush mount kit

[1] Available in 100kA per phase only.

Example: TPS3C1110D = Type 1 SPD for a 208/120V application with a surge current capacity of 100kA per phase, in a standard NEMA 4X enclosure with dry contacts and audible alarm option.

TPS3 12 Type 1 Surge Protective Device (SPD)

Mounts external to electrical distribution equipment
- Recommended for line side or load side applications

Ordering Information – When an option is not selected, put a zero (0) in the field.

T	P	S	3	■	1	2	■	■	■	■	■
				1			2		3	4X	4DorT

1. Voltage Code
- A = 120/240V, 1Ø, 3W
- B = 120/240V, 3Ø, 4W
- C = 120/208V, 3Ø, 4W
- D = 240V, 3Ø, 3W [1]
- E = 277/480V, 3Ø, 4W
- F = 480V, 3Ø, 3W [1]
- G = 600V, 3Ø, 3W [2]
- K = 380/220V, 3Ø, 4W
- L = 600/347V, 3Ø, 4W
- S = 400/230V, 3Ø, 4W

2. Surge Current (kA)
- 10 = 100kA per phase
- 15 = 150kA per phase
- 20 = 200kA per phase
- 25 = 250kA per phase
- 30 = 300kA per phase
- 40 = 400kA per phase
- 50 = 500kA per phase

3. Enclosure
- 0 = Standard NEMA 1/12/3R/4 steel
- V = NEMA 4X non-metallic
- S = NEMA 4X stainless steel
- F = NEMA 1 flush mount
- P = NEMA 1 screwcover pullbox with extended display on 6 ft cable for line side mounting in SWBD/SWGR

4. Options
- X = Surge counter
- D = Internal rotary disconnect
- T = Thru-door disconnect

Available accessories ordered separately. RMSIE – Remote monitor

[1] Not available in 500kA.
[2] Available in 100, 150, 200, 250 kA only.

Example: TPS3C12100XD = Type 1 SPD for a 208/120V application with a surge current capacity of 100kA per phase, in a standard NEMA 1/12/3R/4 enclosure with a surge counter and internal rotary disconnect option.

TPS3 L12 True 10 Mode Protection
Type 1 Surge Protective Device (SPD)

Mounts external to electrical distribution equipment
- Recommended for line side or load side applications

Ordering Information – When an option is not selected, put a zero (0) in the field.

T	P	S	3	■	L	1	2	■	■	■	■	■
				1				2		3	4X	4DorT

1. Voltage Code
A = 120/240V, 1Ø, 3W
B = 120/240V, 3Ø, 4W
C = 120/208V, 3Ø, 4W
E = 277/480V, 3Ø, 4W
K = 380/220V, 3Ø, 4W
S = 400/230V, 3Ø, 4W

2. Surge Current (kA)
15 = 150kA per phase
30 = 300kA per phase
45 = 450kA per phase

3. Enclosure
0 = Standard NEMA 1/12/3R/4 steel
V = NEMA 4X non-metallic
S = NEMA 4X stainless steel
F = NEMA 1 flush mount
P = NEMA 1 screwcover pullbox with extended display on 6 ft cable for line side mounting in SWBD/SWGR

4. Options
X = Surge counter
D = Internal rotary disconnect
T = Thru-door disconnect

Available accessories ordered separately. RMSIE – Remote monitor

Example: TPS3CL12150XD = 10 Mode, Type 1 SPD for a 208/120V application with a surge current capacity of 150kA per phase, in a standard NEMA 1/12/3R/4 enclosure with a surge counter and internal rotary disconnect option.

TPS3 15 Type 1 Surge Protective Device (SPD)

Mounts external to electrical distribution equipment
- Recommended for line side or load side applications

Ordering Information – When an option is not selected, put a zero (0) in the field.

T P S 3 [ ] 1 5 [ ] [ ] [ ] [ ] [ ]

1 2 3 4X 4T

1. Voltage Code
- A = 120/240V, 1Ø, 3W
- B = 120/240V, 3Ø, 4W
- C = 120/208V, 3Ø, 4W
- D = 240V, 3Ø, 3W [1]
- E = 277/480V, 3Ø, 4W
- F = 480V, 3Ø, 3W [1]
- G = 600V, 3Ø, 3 W [2]
- K = 380/220V, 3Ø, 4W
- L = 600/347V, 3Ø, 4W
- S = 400/230V, 3Ø, 4W

2. Surge Current (kA)
- 40 = 400kA per phase [3]
- 50 = 500kA per phase [3]
- 60 = 600kA per phase
- 80 = 800kA per phase
- 1K = 1000kA per phase

3. Enclosure
- 0 = Standard NEMA 1/12/3R/4 steel
- V = NEMA 4X non-metallic
- S = NEMA 4X stainless steel
- F = NEMA 1 flush mount
- P = NEMA 1 screwcover pullbox with extended display on 6 ft cable for line side mounting in SWBD/SWGR

4. Options
- X = Surge counter
- T = Thru-door disconnect

Available accessories ordered separately.
RMSIE – Remote monitor

Note: Internal disconnect switch is standard.

[1] Available in 600 and 800 kA only.
[2] Available in 400 and 500 kA only.
[3] Available in G voltage code only.

Example: TPS3C1560SX0 = Type 1 SPD for a 208/120V application with a surge current capacity of 600kA per phase, in a NEMA 4X stainless steel enclosure with a surge counter option and standard disconnect switch.

TPS3 L15 True 10 Mode Protection
Type 1 Surge Protective Device (SPD)

Mounts external to electrical distribution equipment
- Recommended for line side or load side applications

Ordering Information – When an option is not selected, put a zero (0) in the field.

T	P	S	3	■	L	1	5	■	■	■	■	■
				1				2		3	4X	4T

1. Voltage Code
- A = 120/240V, 1Ø, 3W
- B = 120/240V, 3Ø, 4W
- C = 208Y/120V 3Ø, 4W
- E = 277/480V, 3Ø, 4W
- K = 380V/220V, 3Ø, 4W
- S = 400Y/230V, 4W

2. Surge Current (kA)
- 60 = 600kA per phase
- 90 = 900kA per phase

3. Enclosure
- 0 = Standard NEMA 1/12/3R/4 steel
- V = NEMA 4X non-metallic
- S = NEMA 4X stainless steel
- F = NEMA 1 flush mount
- P = NEMA 1 screwcover pullbox with extended display on 6 ft cable for line side mounting in SWBD/SWGR

4. Options
- X = Surge counter
- T = Thru-door disconnect

Note: Internal disconnect switch is standard.

Example: TPS3CL15600X0 = 10 Mode, Type 1 SPD for a 208/120V application with a surge current capacity of 600kA per phase, in a standard NEMA 1/12/3R/4 enclosure with a surge counter option and standard disconnect switch.

Transformers

General Purpose Transformers

Standard Units

1P 480 x 240V Primary, 120/240V Secondary

KVA	Catalog Number
.25	1D1N205
.50	1D1N505
.75	1D1N705
1.0	1D1N001
1.5	1D1N105
2.0	1D1N002
3.0	1D1N003
5.0	1D1N005
7.5	1D1N007
10	1D1N010
15	1D1N015
15	1D1Y015TP1
25	1D1Y025TP1
37.5	1D1Y037TP1
50	1D1Y050TP1
75	1D1Y075TP1
100	1D1Y100TP1
167	1D1Y167TP1

3P 480V Primary, 208Y/120V Secondary

KVA	Catalog Number
3	3F3R003
6	3F3R006
9	3F3R009
15	3F3Y015TP1
30	3F3Y030TP1
45	3F3Y045TP1
75	3F3Y075TP1
112.5	3F3Y112TP1
150	3F3Y150TP1
225	3F3Y225TP1
300	3F3Y300TP1
500	3F3Y500TP1

3P 480V Primary, 240V Secondary with 120V Tap on B Phase

KVA	Catalog Number
15	3F1Y015TPI
30	3F1Y030TPI
45	3F1Y045TPI
75	3F1Y075TPI
112.5	3F1Y112TPI
150	3F1Y150TPI

Modified Units

3P 480V Primary, 208Y/120V Secondary
Low Temperature 115C Rise

KVA	Catalog Number
15	3F3Y015F TP1
30	3F3Y030F TP1
45	3F3Y045F TP1
75	3F3Y075F TP1
112.5	3F3Y112F TP1
150	3F3Y150F TP1
225	3F3Y225F TP1

3P 480V Primary, 208Y/120V Secondary
Low Temperature 80C Rise

KVA	Catalog Number
15	3F3Y015BTP1
30	3F3Y030BTP1
45	3F3Y045BTP1
75	3F3Y075BTP1
112.5	3F3Y112BTP1
150	3F3Y150BTP1
225	3F3Y225BTP1

3P 480V Primary, 208Y/120V Secondary
Noise Attenuation w/Electrostatic Shield

KVA	Catalog Number
15	3F3Y015ESTP1
30	3F3Y030ESTP1
45	3F3Y045ESTP1
75	3F3Y075ESTP1
112.5	3F3Y112ESTP1
150	3F3Y150ESTP1

3P 480V Primary, 208Y/120V Secondary
K13 (100% Non-Linear Load)

KVA	Catalog Number
15	3F3Y015K13TP1
30	3F3Y030K13TP1
45	3F3Y045K13TP1
75	3F3Y075K13TP1
112.5	3F3Y112K13TP1
150	3F3Y150K13TP1

Catalog Number Coding System for Transformers

3	F	3	Y	150	R	K13	F	ES	C	LN3	Z4	TE	TEE	TP1	LZ	HM1	S	30	TS7	TV	TB	SS	SN4X	13	P	CC	W	VG	DS
1	2	3	4	5	6	7	8	9	10	11	12	13	14	15	16	17	18	19	20	21	22	23	24	25	26	27	28	29	30

Basic Rating Information

1. Phase
2. Primary Voltage
3. Secondary Voltage
4. Taps
5. kVA

Optional Modifications

6. Reduced Size Plus (RSP) Model
7. K-Factor (K4, K13, K20, K30)
8. Low Temperature Rise: 130C = (G), 115C = (F) 80C = (B)
9. Electrostatic Shield [1] (ES)(ES2=dual) ES3=120dB attenuation on HM1& 2
10. Copper Wound (C)
11. Low Noise (LN3 = 3dB below, LN5, etc.)
12. Seismic Zone 4 Rated (Z4)
13. Totally Enclosed NEMA 3R (TE)
14. Totally Enclosed Encapsulated N-3R (TEE)
15. Energy Efficient (NEMA - TP1)
16. Frequency 50/60Hz
17. Harmonic Mitigation (HM1=1 secondary/single output, HM2=2 secondaries/double output)
18. Super Energy Efficient - Surpasses NEMA-TP1 (available in TP1, HM1, HM2, "TP1S", HM1S", "HM2S"
19. Phase shift for HM1 select > (00) or (30) degree.
20. Phase shift for HM2 select > (03) for 0 & 30 (15) for 15 & 45 degree lagging, or (PN15) for 15 pos & 15 neg
21. Thermal Switches (TS7=170C, TS8= 180C or TS0=200C) (TS72=2 switches, TS76=6 switches @170C, etc.)
22. TVSS - Filter Capacitors Secondary Slide with Surge Compression
23. Terminal Block
24. Stainless Steel Enclosure N-3R w/DS or N4X w/SSN4X
25. Enclosure Types NEMA 4X (N4X), NEMA 12 (N12), NEMA 4 (N4)
26. Special Impedence – 12 = 2% max, 13 = 3% max etc.
27. Fungus Proofing
28. Core and Coil Assembly with name-plate displayed on frame bracket (may be shipped in std. enclosure)
29. Wall Mounting Brackets (W)
30. Drip Shields (weathershields) to provide NEMA-3R (DS)

Note 1: If the catalog number will not completely describe the product, it will be identified as SPC- _ _ _KVA-XFMR.

Note 2: "OST" suffix on catalog numbers defines units available in the Siemens warehouse distribution system.

Note 3: Suffix K4PT1K1 or K13TP1K1 will indicate K-Factor rating and TP1 rating at K1 loading.

Optional Product Offerings

1. For non-standard or non-cataloged voltages or non-cataloged primary taps refer to sales office.
2. Non-standard application, 50/60 Hz, special impedance, voltage, etc. – consult sales office.
3. Wall mounting brackets and weathershields – available at no charge on all indicated units when requested at time of initial project order. Contact sales office for feasibility of wall brackets on units with special temperature rise, low noise, or copper windings.
4. Special temperature rise:
   - 115° C rise, can tolerate 15% continuous overload. (Suffix Code F) [1]
   - 80° C rise, can tolerate 30% continuous overload. (Suffix Code B) [1]
5. Copper windings – Available on most designs. (Suffix Code C).
6. Low Noise Suffix code LN3 (3dB below std.) available as indicated. For LN5, etc. contact sales office with required sound level.
7. Totally Enclosed Non-Ventilated (TE)
8. Auto transformers (A)
9. Non-standard paint color – contact sales office.
10. Electrostatic shield (full width copper foil) for added noise attenuation and reduction of high frequency disturbances. (Suffix Code ES) [2]
11. Energy Efficient (NEMA TP1), Meets TP1-1996 Efficiency.
12. Harmonic mitigating transformers
13. Transformer and panel combinations
14. Reduced Size Plus models

[1] With continuous overloads these units will be operating as 150°C rise designs.

[2] "XES" Suffix coding for shielded isolation with filters and surge suppression.

Optional Product Offerings

Phase	
1-Phase	1
3-Phase	3

Primary	
240X120	A
208	B
240	C
480X240	D
277	E
480	F
600	G
190/200/208/220x380	Export
400/416/440	Range H
190/208/220/240x380	Export
416/440/480	Range X

Secondary	
120/240	1
240 [1]	2
208Y/120	3
120/208 [2]	3
480Y/277	5
380Y/219	6
230Y/133	7
110/220	8

TAP Designations

Description [3]	Designation
None	N
2–5% FCBN	R
2–5% (1 FCAN, 1 FCBN)	S
2–2.5% FCBN	U
6–2.5% (2 FCAN, 4 FCBN)	Y

KVA

KVA	Catalog Code	KVA	Catalog Code	KVA	Catalog Code	KVA	Catalog Code
0.25	205	5	005	30	030	150	150
0.50	505	6	006	37.5	037	167	167
0.75	705	7.5	007	45	045	225	225
1	001	9	009	50	050	300	300
1.5	105	10	010	75	075	500	500
2	002	15	015	100	100	750	750
3	003	25	025	112.5	112	1000	000

1 Available in 3-phase 3 to 15 KVA only.
2 Applies to HMT designs.
3 Taps are determined by transformer design and are not selectable on standard catalog units.

Accessories

Dripshield/Weathershield Kits for Type QST Suffix Ventilated Transformers [1] [2]

Catalog Number	150°C Rise & TP1 KVA Sizes		115°C Rise & TPI KVA Sizes		80°C Rise & TPI KVA Sizes		Name-plate Ref. #
	Single Phase	Three Phase	Single Phase	Three Phase	Single Phase	Three Phase	
DSK11Q	25	30, 45	—	30	—	15, 30	4317G05
DSK12Q	37.5, 50, 75	75, 112.5	25, 37.5, 50	45, 75	25, 37.5	45, 75	4317G06
DSK34Q	—	150	—	112.5	—	—	4317G07
DSK15Q	100, 167	225	75, 100	150	50, 75, 100	112.5, 150	4317G08
DSK36Q	—	300	—	225	—	—	4317G09
DSK37Q	—	500	—	300	—	—	4317G10
DSK31Q	—	15	—	15	—	—	4317G11
DSK38Q	—	750, 1000	—	500, 750	—	500	4317G67

Wall Mounting Brackets For Type QST Ventilated Transformers

Catalog Number	150°C Rise & TP1 KVA Sizes		115°C Rise & TPI KVA Sizes		80°C Rise & TPI KVA Sizes	
	Single Phase	Three Phase	Single Phase	Three Phase	Single Phase	Three Phase
WMB42Q	25	15, 30, 45	—	15, 30	—	15, 30
WMB43Q	37.5, 50	75	25, 37.5	45	25	45

Terminal Lug Kits For Ventilated Transformers

Catalog Number	Single Phase KVA Sizes	Three Phase KVA Sizes	Terminal Lug [3]		Cable Range
			Quantity [4]	Lug No.	
TLK31Q	—	15	7	KA25U/TA0	14awg-1/0mcm
TLK32Q	—	30, 45	7	KA29U/TA250	6awg-250mcm
TLK11Q	25, 37.5	—	8	KA29U/TA250	6awg-250mcm
TLK13Q	75	—	12	KA29U/TA250	6awg-250mcm
TLK33Q	—	75	3	KA29U/TA250	6awg-250mcm
TLK12Q	50	—	4	KA29U/TA250	6awg-250mcm
TLK34Q	—	112.5	11	KA31U/TA350	6awg-350mcm
TLK36Q	—	225	22	KA31U/TA350	6awg-350mcm
TLK35Q	—	150	3	KA31U/TA350	6awg-350mcm
TLK37Q	—	300	6	KA31U/TA350	6awg-350mcm
TLK15Q	167	—	8	KA31U/TA350	6awg-350mcm
TLK38Q	—	500	9	KA31U/TA350	6awg-350mcm
TLK14Q	100	—	12	KA31U/TA350	6awg-350mcm
TLK39Q	—	750	12	KA31U/TA350	6awg-350mcm

Terminal Lug Kits For Ventilated Transformers (cont'd)

Catalog Number	Terminal Lug [3]		Cable Range	Hardware Included	
	Quantity [4]	Lug No.		Quantity	Bolt Size
TLK31Q	n/a	—	—	7	1/4 x 1"
TLK32Q	n/a	—	—	7	5/16" x 1 1/2"
TLK11Q	n/a	—	—	8	5/16" x 1 1/2"
TLK13Q	n/a	—	—	12	5/16" x 1 1/2"
TLK33Q	8	KA31U/TA350	6awg-350mcm	3, 8	(3) 5/16" x 1 1/2" (8) 3/8" x 1 1/2"
TLK12Q	4	KA31U/TA350	6awg-350mcm	8	3/8" x 1 1/2"
TLK34Q	n/a	—	—	11	3/8" x 1 1/2"
TLK36Q	n/a	—	—	22	3/8" x 1 1/2"
TLK35Q	8	KA31U/TA500	4awg-500mcm	11	3/8" x 1 1/2"
TLK37Q	16	KA31U/TA500	4awg-500mcm	22	3/8" x 1 1/2"
TLK15Q	12	KA31U/TA500	4awg-500mcm	20	3/8" x 1 1/2"
TLK38Q	24	KA31U/TA500	4awg-500mcm	33	3/8" x 1 1/2"
TLK14Q	n/a	—	—	12	3/8" x 1 1/2"
TLK39Q	28	KA31U/TA500	4awg-500mcm	40	3/8" x 1 1/2"

1 These accessories fit only warehouse stock transformers with QST Catalog Suffix.
2 UL Listed for indoor and outdoor use with dripshield installed.
3 May be used on "QST" suffix units and "non QST" suffix transformers. Terminal lugs are screw type, lug connectors suitable for both copper and aluminum cable. TA lugs are single barrel, AU lugs are double barrel. Each barrel is suitable for cable range shown. Lugs are rated 90° C
4 Lug kit contains quantity required for each transformer.

GD Safety Switches
ON
OFF

General Duty Safety Switches

240V Fusible
2P, 2F, and Neutral [1] [2] [3]

240V AC / 250V DC

System	Ampere Rating	Indoor Type 1 Catalog Number	Outdoor Type 3R Catalog Number
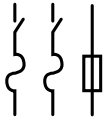	30	GF221N	GF221NR
	60	GF222N	GF222NR
	100	GF223N	GF223NR
	200	GF224N	GF224NR
	400	GF225NH [4]	GF225NRH [4]
	400	GF225N	GF225NR
	600	GF226NH [4]	GF226NRH [4]
	600	GF226N	GF226NR

3P, 3F, and Neutral [3]

240V AC / 250V DC

System	Ampere Rating	Indoor Type 1 Catalog Number	Outdoor Type 3R Catalog Number
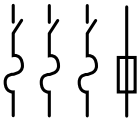	30	GF321N	GF321NR
	60	GF322N	GF322NR
	100	GF323N	GF323NR
	200	GF324N	GF324NR
	400	GF325NH [4]	GF325NRH [4]
	400	GF325N	GF325NR
	600	GF326NH [4]	GF326NRH [4]
	600	GF326N	GF326NR

240V Non-Fusible
2P or 3P

240V AC / 250V DC

System	Ampere Rating	Indoor Type 1 Catalog Number	Outdoor Type 3R Catalog Number
	30	GNF321	GNF321R
	60	GNF322	GNF322R
	100	GNF323	GNF323R
	200	GNF324	GNF324R
	400	GNF325	HNF365R
			Use 600V Switch
	600	GNF326	HNF366R
			Use 600V Switch

1 These switches are UL listed for application on grounded B-phase systems.
2 Suitable for use on 3-phase motor loads.
3 Service entrance rated.
4 Height reduced switches (45.25" rather than 56" in height) for use with 500MCM or smaller conductors.

HD Safety Switches

Heavy Duty Safety Switches

240V Fusible
2P, 2F, and Neutral [1] **240V AC / 250V DC**

System	Ampere Rating	Indoor Type 1 Catalog Number	Outdoor Type 3R Catalog Number
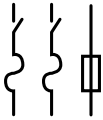	30	**HF221N**	**HF221NR**
	60	**HF222N**	**HF222NR**
	100	**HF223N**	**HF223NR**
	200	**HF224N**	**HF224NR**
	400	**HF225NH** [2]	**HF225NRH** [2]
	400	**HF225N**	**HF225NR**
	600	**HF226NH** [2]	**HF226NRH** [2]
	600	**HF226N**	**HF226NR**
	800	**HF227N**	**HF227NR**
	1200	**HF228N**	**HF228NR**

3P, 3F, and Neutral **240V AC / 250V DC**

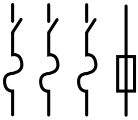	30	**HF321N**	**HF321NR**
	60	**HF322N**	**HF322NR**
	100	**HF323N**	**HF323NR**
	200	**HF324N**	**HF324NR**
	400	**HF325NH** [2]	**HF325NRH** [2]
	400	**HF325N**	**HF325NR**
	600	**HF326NH** [2]	**HF326NRH** [2]
	600	**HF326N**	**HF326NR**
	800	**HF327N**	**HF327NR**
	1200	**HF328N**	**HF328NR**

1 These switches are UL listed for application on grounded B-phase systems.
2 Height reduced switch (45.25 rather than 56 inches in height) for use with 500MCM or smaller conductors.

Heavy Duty Safety Switches

600V Fusible
2P, 2F [1]

480V AC / 600V AC / 600V DC

System	Ampere Rating	Indoor Type 1 Catalog Number	Outdoor Type 3R Catalog Number
	30	HF261	HF261R
	60	HF262	HF262R
	100	HF263	HF263R
	400	HF265 ■	HF265R ■
	600	HF266 ■	HF266R ■

3P, 3F

480V AC / 600V AC / 250V DC [3]

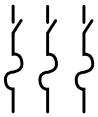

	30	HF361	HF361R
	60	HF362	HF362R
	100	HF363	HF363R
	200	HF364	HF364R
	400	HF365H [2]	HF365RH [2]
	400	HF365	HF365R
	600	HF366H [2]	HF366RH [2]
	600	HF366	HF366R
	800	HF367	HF367R
	1200	HF368	HF368R

3P, 3F, and Neutral

480V AC / 600V AC / 250V DC [3]

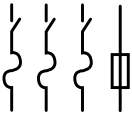

	30	HF361N	HF361NR
	60	HF362N	HF362NR
	100	HF363N	HF363NR
	200	HF364N	HF364NR
	400	HF365N	HF365NR
	600	HF366N	HF366NR
	800	HF367N	HF367NR
	1200	HF368N	HF368NR

600V Non-Fusible
2P [1]

480V AC / 600V AC / 600V DC

	30	HNF261	HNF261R
	60	HNF262	HNF262R
	100	HNF263	HNF263R
	400	HNF265 ■	HNF265R
	600	HNF266 ■	HNF266R ■

3P

480V AC / 600V AC / 250V DC [3]

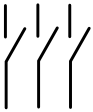

	30	HNF361	HNF361R
	60	HNF362H [4]	HNF362RH [4]
	60	HNF362 [3]	HNF362R [1]
	100	HNF363 [3]	HNF363R [1]
	200	HNF364 [3]	HNF364R [1]
	400	HNF365	HNF365R
	600	HNF366	HNF366R
	800	HNF367	HNF367R
	1200	HNF368	HNF368R

■ Built to order. Allow 2-3 weeks for delivery.

1 Use 3-Pole switch for 200A applications.

2 Height reduced switch (45.25 rather than 56 inches in height) for use with 500MCM or smaller conductors.

3 60-200A 3-Pole switches are also rated 600V DC.

4 Compact switch (11.1"H, 6.6"W box less cover and handle). Short circuit withstand rating - 100,000 RMS Sym amps.

Heavy Duty Safety Switches

600V Fusible [1]
2P, 2F [2]

480V AC / 600V AC / 600V DC

System	Ampere Rating	Type 4/4X Stainless Catalog Number	Type 12 [3] Industrial Catalog Number
	30	HF261S	HF261J ■
	60	HF262S	HF262J ■
	100	HF263S ■	HF263J ■
	400	HF265S ■	HF265J ■
	600	HF266S ■	HF266J ■

3P, 3F

480V AC / 600V AC / 250V DC

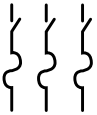	30	HF361S	HF361J
	60	HF362S [5]	HF362J [5]
	100	HF363S [5]	HF363J [5]
	200	HF364S [5]	HF364J [5]
	400	HF365S	HF365J
	600	HF366S	HF366J
	800	HF367S	HF367J ■
	1200	HF368S ■	HF368J ■

600V Non-Fusible [1]
2P [2]

480V AC / 600V AC / 600V DC

System	Ampere Rating	Type 4/4X Stainless Catalog Number	Type 12 [3] Industrial Catalog Number
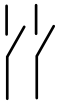	30	HNF261S	HNF261J
	60	HNF262S	HNF262J
	100	HNF263S ■	HNF263J ■
	400	HNF265S ■	HNF265J ■
	600	HNF266S ■	HNF266J ■

3P

480V AC / 600V AC / 250V DC

	30	HNF361S	HNF361J
	60	HNF362SH [4]	HNF362JH [4]
	60	HNF362S [5]	HNF362J [5]
	100	HNF363S [5]	HNF363J [5]
	200	HNF364S [5]	HNF364J [5]
	400	HNF365S	HNF365J
	600	HNF366S	HNF366J
	800	HNF367S	HNF367J ■
	1200	HNF368S ■	HNF368J ■

■ Built to order. Allow 2-3 weeks for delivery.
1 Suitable for use as service entrance equipment.
2 Use 3-Pole switch for 200A application.
3 Also rated type 3S / 3R.
4 Compact switch (11.1"H, 6.6"W box less cover and handle). Short circuit withstand rating – 100,000 RMS Sym. amps.
5 Also rated 600V DC.

Safety Switch Accessories

Accessories

Auxiliary Contacts with 1 NO and 1 NC Isolated Contacts

Switch Amp Rating	Auxiliary Switch Catalog Number	Maximum Kit Ampere Rating			Maximum Kit Horsepower Rating		
		125V AC	250V AC	28V DC	125V AC	250V AC	28V DC
30-200	**HA161234**	10	10	—	1/2	3/4	—
400-1200	**HA165678**	10	10	—	1/2	3/4	—

With 2 NO and 2 NC Isolated Contacts

30-200	**HA261234**	10	10	7	1/2	3/4	—
400-1200	**HA265678**	10	10	7	1/2	3/4	—

Low Current PLC Type with 1 NO and 1 NC Gold Plated Contacts

30-200	**HA361234**	10	10	—	1/2	3/4	—
400-1200	**HA365678**	10	10	—	1/2	3/4	—

Equipment Ground Kits

Switch Amp Rating	Catalog Number	Number of Terminals	Wire Range Per Terminal (Cu/Al)
30 GD	**GSGK60**	2	#14-8 AWG
60-200 GD	**HG61234**	2	#14-4 AWG
30-200 HD	**HG61234**	2	#14-4 AWG
400 & 600	**HG656**	4	#14-2/0
800-1200	**HG678**	8	#6 AWG-250 kcmil

Isolated Ground Kits

Switch Amp Rating	Catalog Number	Number of Terminals		Wire Range Per Terminal (Cu/Al)
		Isolated	Grounded	
30-200	**HG261234**	2	2	#14-4 AWG
400-600	**HG2656**	4	4	#14-2/0

Hubs - Type 3R [1]

Conduit Size Inches	Catalog Number	Used On
Cover	**ECHA000**	
3/4	**ECHA075**	
1	**ECHA100**	30A GD Only
1 1/4	**ECHA125**	
Cover	**ECHS000**	
3/4	**ECHS075**	
1	**ECHS100**	60-200A GD
1 1/4	**ECHS125**	30-200A HD
1 1/2	**ECHS150**	
2	**ECHS200**	
2 1/2	**ECHS250**	
2 1/2	**ECHV250**	
3	**ECHV300**	400-1200A
3 1/2	**ECHV350**	
4	**ECHV400**	

[1] Suitable for 3R switches.

Accessories

Class R Fuse Clip Kits
All General Duty and Heavy Duty Switches are field convertible to accept Class R Fuse Clip Kits. The kits prevent the installation of Class H and K fuses (one kit required per 3-pole switch).

Class R Fuse Clip Kits [1]

Catalog Number	Description
GSRK321	30A, 240V Kit (GD only)
HR21	30A, 240V Kit (HD only)
HR612	30A, 600V Kit / 60A, 240V Kit
HR62	60A, 600V Kit
HR63	100A Kit
HR64	200A Kit
HR656	400A / 600A Kit

Neutral Kits
Standard Neutral Kits can be field installed in General and Heavy Duty Switches.

Neutral Kits [2]

Switch Ampere Rating	Kit Catalog Number
30 GD	**W410190**
30 HD, 60 GD	**HN612**
60, 100 HD, 100 GD	**HN623**
200	**HN64**
400 & 600	**HN656**
800 & 1200	**HN678**

200% Neutral Kits
UL listed 200% Neutrals are available for 100-600A Heavy Duty Switches. They are typically used with non-linear transformers or where increased neutral ampacity / lug capacity is required.

200% Neutral Kits [3]

Switch Ampere Rating	Kit Catalog Number	Wire Range Line & Load Lugs (Cu/Al)
100	**HN263**	(2) #14-1/0 AWG
200	**HN264**	(2) #6 AWG - 300 Kcmil
400	**HN656**	(2) 1/0 AWG - 750 Kcmil
		or (4) 1/0 AWG - 250 Kcmil
600	**HN678**	(4) 1/0 AWG - 750 Kcmil

1 One kit per 3 pole switch required.
2 Applies to Visible Blade Type VBII Switches only.
3 For Visible Blade Type VBII Switches only.

The information provided in this brochure contains merely general descriptions or characteristics of performance which in case of actual use do not always apply as described or which may change as a result of further development of the products. An obligation to provide the respective characteristics shall only exist if expressly agreed in the terms of contract.

All product designations may be trademarks or product names of Siemens AG or supplier companies whose use by third parties for their own purposes could violate the rights of the owners.

Subject to change without prior notice.
Order No: PBBR-REFGD-0710
All rights reserved.
Printed in USA
© 2010 Siemens Industry, Inc.

Siemens Industry, Inc.
Building Technologies Division
5400 Triangle Parkway
Norcross, GA 30092
1-800-964-4114

info.us@siemens.com

www.usa.siemens.com/powerdistribution

Sealed Single- and Three-Phase Transformers

Table 14.6: Sealed Transformers

kVA	Catalog No.	$ Price	Full Capacity Taps	Degree C Temp. Rise	Weight (lbs) ▲	Enclosure ◄■
Single Phase—240 X 480 V Primary 120/240 V Secondary; 60 Hz; cULus Listed						
0.05	50SV1A	**182.00**	None	55	4.2	1A
0.10	100SV1A	**214.00**	None	55	4.5	2A
0.15	150SV1A	**254.00**	None	55	6.2	3A
0.25	250SV1B	**270.00**	None	80	10.5	4A
0.50	500SV1B	**386.00**	None	80	13.8	5A
0.75	750SV1F	**460.00**	None	115	15.5	6A
1	1S1F	**602.00**	None	115	21.2	7A
1.5	1.5S1F	**724.00**	None	115	30.1	8A
2	2S1F	**896.00**	None	115	39.1	9A
3	3S1F	**1144.00**	None	115	60	10A
5	5S1F	**1556.00**	None	115	115	13B
7.5	7S1F	**2188.00**	None	115	135	13B
10	10S1F	**2712.00**	None	115	165	13B
Single Phase—600 V Primary 120/240 V Secondary; 60 Hz; cULus Listed						
0.05	50SV51A	**182.00**	None	55	4.2	1A
0.10	100SV51A	**214.00**	None	55	4.5	2A
0.15	150SV51A	**262.00**	None	55	6.2	3A
0.25	250SV51B	**290.00**	None	80	10.5	4A
0.50	500SV51B	**408.00**	None	80	13.8	5A
0.75	750SV51F	**486.00**	None	115	15.5	6A
1	1S51F	**634.00**	None	115	21.2	7A
1.5	1.5S51F	**758.00**	None	115	30.1	8A
2	2S51F	**940.00**	None	115	39.1	9A
3	3S4F	**1240.00**	2–5%FCBN	115	60	10A
5	5S4F	**1676.00**	2–5%FCBN	115	115	13B
7.5	7S4F	**2348.00**	2–5%FCBN	115	135	13B
10	10S4F	**2922.00**	2–5%FCBN	115	165	13B
Single Phase—120x240 V Primary 120/240 V Secondary; 60 Hz; cULus Listed						
1	1S6F	**1090.00**	None	115	21.2	7A
1.5	1.5S6F	**1558.00**	None	115	30.1	8A
2	2S6F	**1746.00**	None	115	39.1	9A
3	3S6F	**1892.00**	None	115	60	10A
5	5S6F	**2418.00**	None	115	110	13B
7.5	7S6F	**3216.00**	None	115	135	13B
10	10S6F	**3992.00**	None	115	150	13B
Single Phase—208 V Primary 120/240 V Secondary; 60 Hz; cULus Listed						
1	1S7F	**1090.00**	None	115	21.2	7A
1.5	1.5S7F	**1558.00**	None	115	30.1	8A
2	2S7F	**1746.00**	None	115	39.1	9A
3	3S7F	**1892.00**	None	115	60	10A
5	5S7F	**2418.00**	None	115	110	13B
7.5	7S7F	**3216.00**	None	115	135	13B
10	10S7F	**3992.00**	None	115	150	13B
Single Phase—277 V Primary 120/240 V Secondary; 60 Hz; cULus Listed						
1	1S8F	**1090.00**	None	115	21.2	7A
1.5	1.5S8F	**1558.00**	None	115	30.1	8A
2	2S8F	**1746.00**	None	115	39.1	9A
3	3S8F	**1892.00**	None	115	60	10A
5	5S8F	**2418.00**	None	115	110	13B
7.5	7S8F	**3216.00**	None	115	135	13B
10	10S8F	**3992.00**	None	115	150	13B
Three Phase—480 V Delta Primary 208Y/120 V Secondary; 60 Hz; UL/cULus Listed; Copper Windings						
3	3T2F	**2016.00**	2–5%FCBN	115	120	12C
6	6T2F	**2310.00**	2–5%FCBN	115	145	12C
9	9T2F	**3088.00**	2–5%FCBN	115	235	14C
15	15T2F	**4644.00**	2–5%FCBN	115	300	14C
30	30T2F	**8536.00**	2–5%FCBN	115	660	16C
Three Phase—480 V Delta Primary 240 V Delta Secondary; 60 Hz; UL/cULus Listed; Copper Windings						
3	3T5F	**2016.00**	2–5%FCBN	115	120	12C
6	6T5F	**2310.00**	2–5%FCBN	115	145	12C
9	9T75F	**3088.00**	4–2.5%FCBN	115	235	14C
15	15T75F	**4644.00**	4–2.5%FCBN	115	300	14C
30	30T75F	**8536.00**	4–2.5%FCBN	115	660	16C

▲ Not for construction. Contact your local Schneider Electric sales office or your local Schneider Electric distributor.
■ For enclosure styles, see Dimensions Table, on page 14-10.

NOTE: FCBN = full capacity below normal

Sealed Single-Phase Export Model Transformers

These general purpose transformers are designed to accommodate voltage systems worldwide. Export model transformers 10 kVA and smaller, certified by TUV (File no. E9571881.01) to meet EN61558-1, are CE marked in addition to being UL and cULus Listed. For CE marked transformers in other ratings, contact your nearest Schneider Electric sales office for CE marked transformers up to 300 kVA, single and three phase. See page 14-11 for optional Fingersafe® terminal block cover kit.

Table 14.7: Sealed Export Model Transformers

kVA	Catalog No.	$ Price	Full Capacity Taps	Deg. C Temp. Rise	Weight (lbs) ♦	Enclosure ♦★
Single Phase—190/200/208/220/380/400/416/440 V Primary; 110/220 V Secondary; 60 Hz; cULus Listed						
1e	1S67F	**1180.00**	None	115	21.2	7A
2	2S67F	**1716.00**	None	115	39.1	9A
3	3S67F	**2290.00**	None	115	55.2	10A
5	5S67F	**2554.00**	None	115	135	13B
7.5	7S67F	**3314.00**	None	115	165	13B
10	10S67F	**4004.00**	None	115	165	13B

♦ Not for construction. Contact your local Schneider Electric sales office or your local Schneider Electric distributor.
★ For enclosure styles, see Dimensions Table, on page 14-10.

Sealed Single-Phase Buck and Boost Transformers

Buck and boost transformers are isolating transformers that have 120 x 240 volt primaries and either 12/24 or 16/32 volt secondaries. When used as isolating transformers they carry the full load stated on the nameplate. By special interconnection of the windings, an autotranformer is obtained.

NOTE: When used to supply a 3-phase, 4-wire load, the source must be 3-phase, 4-wire.

Table 14.8: Sealed Buck and Boost Transformers

kVA	120 x 240 V Primary 60 Hz			240 x 480 V Primary 60 Hz		Degree C Temp. Rise	Weight (lbs) ▼	Enclosure ▼△
	12/24 V Secondary	16/32 V Secondary	$ Price	24/48 V Secondary	$ Price			
.05	50SV43A	50SV46A	**206.00**	50SV82A	**284.00**	55	4.2	1A
.10	100SV43A	100SV46A	**246.00**	100SV82A	**344.00**	55	4.5	2A
.15	150SV43A	150SV46A	**276.00**	150SV82A	**386.00**	55	6.2	3A
.25	250SV43B	250SV46B	**328.00**	250SV82B	**460.00**	80	10.5	4A
.50	500SV43B	500SV46B	**420.00**	500SV82B	**588.00**	80	13.8	5A
.75	750SV43F	750SV46F	**552.00**	750SV82F	**774.00**	115	15.5	6A
1.0	1S43F	1S46F	**676.00**	1S82F	**948.00**	115	21.2	7A
1.5	1.5S43F	1.5S46F	**830.00**	1.5S82F	**1162.00**	115	30.1	8A
2.0	2S43F	2S46F	**1072.00**	2S82F	**1500.00**	115	39.1	9A
3.0	3S43F	3S46F	**1480.00**	3S82F	**2072.00**	115	60	□

▼ Not for construction. Contact your local Schneider Electric sales office or your local Schneider Electric distributor.
△ For enclosure styles, see Dimensions Table, on page 14-10.
□ Dimensions: 14.50 (H) x 8.60 (W) x 6.50 (D).

NOTE: Refer to www.us.squared.com/buckboost for additional information.

© 2009 Schneider Electric
All Rights Reserved

Courtesy of Steven Engineering, Inc.-230 Ryan Way, South San Francisco, CA 94080-6370-Main Office: (650) 588-9200-Outside Local Area: (800) 258-9200-www.stevenengineering.com

Sealed Single- and Three-Phase Stainless Steel Enclosed Transformers

Stainless steel enclosures provide better corrosion resistance than standard painted enclosures. Schneider Electric has a complete line of stainless steel transformers to meet demands for extra protection in corrosive environments.

The transformers listed below are built with an epoxy-resin encapsulated core and coil assembly inside of a non-ventilated #316 stainless steel enclosure. Terminals are flexible copper lead wire. When connections are made using an appropriate method, the final transformer installation is virtually impervious to contamination from materials such as acids, food products, organic solvents, salt water, or similar. Transformers are cULus Listed for NEMA 3R indoor or outdoor use.

Ventilated and non-ventilated transformers built using #316 stainless steel enclosures are also available. These are well suited for moderately corrosive locations where enclosure protection and appearance are important. Contact your nearest Schneider Electric sales office for details.

Table 14.9: Stainless Steel Enclosed Transformers

kVA	Catalog No.	$ Price	Full Capacity Taps	Degree C Temp. Rise	Weight (lbs) ▲	Enclosure ▲■
Single-Phase—240x480 V Primary 120/240 V Secondary 60 Hz; cULus Listed						
1	1S1FSS	**1274.00**	None	115	21	7A
1.5	1.5S1FSS	**1778.00**	None	115	30	8A
2	2S1FSS	**1914.00**	None	115	39	9A
3	3S1FSS	**2684.00**	None	115	60	10A
5	5S1FSS	**3880.00**	None	115	110	13B
7.5	7S1FSS	**4164.00**	None	115	135	13B
10	10S1FSS	**4764.00**	None	115	150	13B
15	15S1FSS	**7036.00**	None	115	225	15B
25	25S1FSS	**9606.00**	None	115	300	15B
Single-Phase—480 V Primary 120/240 V Secondary 60 Hz; cULus Listed						
3	3S40FSS	**2684.00**	2–5% FCBN	115	60	10A
5	5S40FSS	**3880.00**	2–5% FCBN	115	110	13B
7.5	7S40FSS	**4164.00**	2–5% FCBN	115	135	13B
10	10S40FSS	**4764.00**	2–5% FCBN	115	150	13B
15	15S40FSS	**7036.00**	2–5% FCBN	115	225	15B
25	25S40FSS	**9606.00**	2–5% FCBN	115	300	15B
Three-Phase—480 V Delta Primary 208Y/120 V Secondary 60 Hz; cULus Listed						
3	3T2FSS	**4116.00**	2–5% FCBN	115	120	12C
6	6T2FSS	**4924.00**	2–5% FCBN	115	145	12C
9	9T2FSS	**6072.00**	2–5% FCBN	115	234	14C
15	15T2FSS	**7726.00**	2–5% FCBN	115	300	14C
30	30T2FSS	**13022.00**	2–5% FCBN	115	660	16C

▲ Not for construction. Contact your local Schneider Electric sales office for certified prints.
■ For enclosure styles, see Dimensions on page 14-10.

NOTE: FCBN = full capacity below normal
Lugs are furnished by customer

Additional voltages not listed below are available. Contact your nearest Schneider Electric sales office for details. Stainless steel is painted.

Table 14.10: NEMA 4X Stainless Steel Enclosed

kVA	Catalog No.	$ Price	Full Capacity Taps	Degree C Temp. Rise
Single-Phase—480 V Primary, 120/240 V Secondary 60 Hz				
1	1S40F4XSS	**9920.00**	2–5% FCBN	115
2	2S40F4XSS	**10380.00**	2–5% FCBN	115
3	3S40F4XSS	**10816.00**	2–5% FCBN	115
5	5S40F4XSS	**12332.00**	2–5% FCBN	115
7.5	7S40F4XSS	**13426.00**	2–5% FCBN	115
10	10S40F4XSS	**14460.00**	2–5% FCBN	115
15	15S40F4XSS	**18496.00**	2–5% FCBN	115
25	25S40F4XSS	**27720.00**	2–5% FCBN	115
Three-Phase—480 V Delta Primary, 208Y/120 V Secondary 60 Hz				
3	3T2F4XSS	**12676.00**	2–5% FCBN	115
6	6T2F4XSS	**13906.00**	2–5% FCBN	115
9	9T2F4XSS	**17506.00**	2–5% FCBN	115
15	15T2F4XSS	**30540.00**	2–5% FCBN	115
30	30T2F4XSS	**41612.00**	2–5% FCBN	115

NOTE: FCBN = full capacity below normal
Lugs are furnished by customer

Non-Ventilated Single- and Three-Phase Transformers

Non-ventilated enclosures are used in environments where large quantities of dust, airborne contaminants, metal particles, or moisture make ventilated transformers impractical. These transformers are also used when water spray from any direction is possible.

The 150 °C rise transformers listed below are built using 220 class insulated core and coil assemblies similar to ventilated units. However, the core and conductors are oversized to maintain proper temperature rise with the limited cooling capacity of a non-ventilated enclosure. Therefore, non-ventilated transformers are larger and heavier than the same kVA and voltage ventilated equivalent.

The 115 °C rise epoxy-resin encapsulated transformers listed below are furnished non-ventilated at standard price.

Non-ventilated enclosures meet protection code IP55 (dust and jetting water protection) per standard IEC-605.29. While not listed to a specific NEMA standard, they are suitable for indoor or outdoor use.

Table 14.11: Non-Ventilated Transformers

kVA	Catalog No.	$ Price	Full Capacity Taps	Degree C Temp. Rise	Weight (lbs) ♦	Enclosure ♦★
Single-Phase—240X480 V Primary 120/240 V Secondary 60 Hz						
15	15S3HNV	**5042.00**	6–2.5%2 + 4–▼	150	230	17E
25	25S3HNV	**7562.00**	6–2.5%2 + 4–▼	150	310	18E
37.5	37S3HNV	**11248.00**	6–2.5%2 + 4–▼	150	350	18E
50	50S3HNV	**14384.00**	6–2.5%2 + 4–▼	150	450	21E
75	75S3HNV	**17600.00**	6–2.5%2 + 4–▼	150	880	24E
100	100S3HNV	**22286.00**	6–2.5%2 + 4–▼	150	975	25E
Three-Phase—480 V Delta Primary 208Y/120 V Secondary 60 Hz						
30	30T3HNV	**8090.00**	6–2.5%2 + 4–	150	340	19E
45	45T3HNV	**12396.00**	6–2.5%2 + 4–	150	510	19E
75	75T3HNV	**19118.00**	6–2.5%2 + 4–	150	1025	22E
112.5	112T3HNV	**25848.00**	6–2.5%2 + 4–	150	1250	24E
150	150T3HNV	**33348.00**	6–2.5%2 + 4–	150	2000	25E
225	225T3HNV	**50238.00**	6–2.5%2 + 4–	150	2100	30E
300	300T3HNV	**55152.00**	6–2.5%2 + 4–	150	3950	31E

♦ Not for construction. Contact your local Schneider Electric sales office for certified prints.
★ For enclosure styles, see Dimensions on page 14-10.
▼ When 240 V tap is used, there will be 3–5% taps: 1 above and 2 below.

NOTE: FCBN = full capacity below normal
Lugs are furnished by customer

© 2009 Schneider Electric
All Rights Reserved

Courtesy of Steven Engineering, Inc.-230 Ryan Way, South San Francisco, CA 94080-6370-Main Office: (650) 588-9200-Outside Local Area: (800) 258-9200-www.stevenengineering.com