surface, and that water has found its way to great depths leaving ore bodies here and there in its course in situations specially favorable, but going through intervening parts of the formation without doing sufficient leaching to develop ore bodies.

We know beyond question that a vast amount of silica—probably in excess of 100,000,000 tons, enough to cover a 40-acre tract 1,000 ft. deep-—has been dissolved and removed from the productive part of the range. Just when or how this has been done we do not know, nor can we answer the question as to where it has gone. Much valuable information that might have been gained has escaped us in the past. If we had complete analyses of the water taken at various depths from the surface in each mine as it was opened, so that we knew the change in mineral content of the water with depth, it would afford us an important clue to the depth we might expect ore to go. Analyses of samples taken from different depths in a mine at present cannot give a true idea of the water composition as it was originally, as the natural circulation has been interfered with by pumping.

Much has been published on the composition of mine waters of the Lake Superior districts, chiefly by A. C. Lane, and any one interested in persuing this study should by all means refer to his publication. I have prepared a table, chiefly of unpublished analyses, which indicates rather clearly that water changes in composition with depth.

I am informed by Mr. M. C. Lake that he is making a careful study of the water in the Ashland mine, and hopes to have some conclusions to present at an early date. Other work on water composition is in progress at the Plumer and Montreal mines.

WATER ANALYSES—Given in parts per million.

Source of Water—	Total Solids	Cl	* % Cl	CO_2	* % CO_2	Na	* % Na
Creek water, near Plumer mine ..	64	6.4	10	8.9	13.9	4.5	7
Spring water, near Plumer mine ..	152	18	11.8	72	47.3	19	12.5
Plumer mine water, 13th level, from well leached formation	426	142	30	78	18.3	30	7.1
Montreal mine, from flowing drill hole, from below bottom level, in little leached formation	2507	1076	43	116	4.6	105	4.2
Germania mine** ..	1493	638	43	27	4.2	81	12.7
Ashland mine*** ..	4500*		60*				

*Percentage is % of total solids made by the constituent named.
**A. C. Lane, J'n'l. Can. Ming. Inst. 1909, Vol. XII, p. 124.
***Anal. furnished by Emil Kronquist, water from 24th level near the ore body.

The above table of analyses shows that the chlorine content increases greatly with depth. In the deeper waters the chlorine occurs chiefly in combination with lime.

Further study and continued observation as mines are worked deeper may eventually give us sufficient information so that we can draw valid inferences from the water composition as to the ultimate depth of ore in a given part of the range. At present, however, we must admit that we do not know enough to make this possible. We cannot even be sure that we can eventually predict this safely from water composition, but the cost of accumulating the information is so slight that this avenue of approach to the solution of such a vital question should not be neglected. As new and deeper levels are opened the water should be analyzed before its composition is altered by the drainage of the workings. Only in this way can we acquire the needed body of facts from which to draw valid deductions.

From our present knowledge of the range we cannot give any figure as the ultimate depth to which merchantable ore will be found. We can say with reasonable assurance that ore will be mined to a depth of 3,000 ft. in some mines, but how much deeper it will go there is too little evidence for us to say. In general it may be said that so far the largest ore bodies are the deepest, but no one knows how long this will continue to be true.

In many mines, if not all, fairly large sized blocks of the formation are unleached and even unoxidized, but for the most part these are surrounded by formation that is thoroughly oxidized and more or less leached. As the bottom of profitable mining is approached these unoxidized parts should be an increasing percentage of the formation. It may be that a careful quantitative study of the mines with this in mind would reveal facts of great importance. So far as I am aware, however, no such study has been made, so we must comfort ourselves with the statement that at present we do not know of any facts that indicate that the end of the ore bodies with depth is in sight.

THE EAST AND WEST PROVINCES.

The Gogebic iron formation is known to extend from near Namakagon Lake in Wisconsin, nearly to Gogebic Lake in Michigan—a total distance of about 65 miles. Of this length about 25 miles is in Michigan and 40 in Wisconsin. The eastern end, from Ramsay eastward is much broken by faulting and by intrusives—a length of about 17 miles—but in this region the formation is quite well oxidized and leached. On the western end there is a somewhat similar occurrence of faulting and intrusion, but here the formation has been differently altered so that there are high percentages of magnetite and some development of iron silicates. These are the extremes of the range.

Another difference that serves to distinguish the east and west provinces is ore production. Most of the ore has come from Michigan. The shipments from the Wisconsin end have been only a small fraction of the production of the range. The westernmost shipment of ore was from the Tylers Fork mine, about 16 miles west of the state boundary. But this must be rated as an unsuccessful exploration at present rather than as a case of real mine production. The westernmost real mine was the Iron Belt, which is 9 miles west of the state boundary.

The productive part of the range is about 13 miles long in Michigan and 9 miles in Wisconsin, a total length of 22 miles, with well oxidized and leached iron formation extending east of it for 12 miles in Michigan, and at least as far west as Tylers Fork in Wisconsin—8 miles. This give a total actually productive length of 22 miles with an additional length of 20 miles more on its two ends, known to be worthy of exploration.

We may put the division between the western and eastern provinces of the Gogebic iron formation at about Tylers Fork. There is no hard and fast boundary. It is probable that the formation west of Tylers Fork may be oxidized and leached sufficiently to carry merchantable ore, but present exploration is too meager to disclose this. Placing this dividing line here is done for the purpose of giving a general description of the two provinces, and should not be taken to imply that it should be the western boundary of exploration for merchantable ore nor that it is the eastern boundary of exploration for magnetic concentrating ore. It is merely a conveniently described place, with a commonly known location that serves the purpose. It really lies toward the east end of a gradation zone several miles in length.

The chief distinguishing features of the eastern province of the iron formation may be stated categorically as follows:

1. Produces all the natural merchantable ore.

2. Iron formation characteristically thoroughly oxidized, prevailing red or brown in color, and well leached and porous.

3. Dikes abundant.

4. Faults abundant, folds infrequent and minor.

5. Little or no magnetite or iron silicate present.

6. Keweenawan Trap Range to north a strong topographic feature.

7. Topographic relief in the iron formation 100 to 300 ft.

In contrast the characteristics of the western province may be stated as follows:

1. Has produced no naturally merchantable ore.

2. Iron formation much less oxidized, and while much is red or black at surface, the drilling shows mostly green and black unoxidized, little leached or unleached, dense, impervious formation.

3. Dikes apparently less abundant than in the east province— although this may be an impression due to lack of exploration.

4. Folds of considerable magnitude present as well as faults.

5. Much of the iron present as magnetite with iron silicates common.

6. Keweenawan Trap Range a much less notable topographic feature—not standing much higher than elevations in the Tyler slate.

7. Topographic relief in the iron formation 200 to 400 ft. The highest point of the Gogebic Range country is Mount Whittlesey, where the Berkshire Mining Company is working southeast of Mellen.

From these differences between the two provinces certain economic facts of importance become evident.

1. Exploration by diamond drilling for naturally merchantable ore bodies is warranted in an area extending fully 9 miles west of any modern exploration. Modern exploration has extended the eastern limits of the productive part of the range. The western limit has not been explored but offers opportunities at least as favorable and is just as promising to the explorer.

2. Exploration in the west province should be limited to the discovery of parts of the iron formation that can be successfully concentrated. The presence of magnetite disseminated through most of the hematite probably offers the readiest means of experimental attack. It is hardly necessary to call to the attention of members of this Institute that commercially successful concentration of iron ore in the Lake Superior region is a matter that is necessarily preceded by much grief. Pioneers in any line of business either go broke or make much. To insure the latter requires a combination of good luck, keen hard analytical study of the problem, and much capital.

In the western province of the Gogebic Range there are the same differences between various beds of the iron formation that are so well known to the east. It is practically certain that successful concentration will of necessity confine its activities to particularly favorable beds.

There is little doubt that a relatively few years will see a much keener interest in iron ore concentration, as the reserves of the Mesabi Range are depleted.

In conclusion then let me state that the future of the Gogebic lies along two lines: 1—Deeper and farther east and west extensions of production of naturally merchantable ore, and 2—Concentration, both of magnetic and of hematite ores. With regard to depth we know no factor that indicates that the bottom is near. It may well be that ore bodies can be found as deep as it is practicable to mine and hoist ore.

DISCUSSION BY A. C. LANE.

Some years ago (April 1914) I published in Economic Geology a paper on Mine Water Composition as a Guide to Ore Currents, and it is a great gratification to have such an authority as Mr. Hotchkiss emphasize the importance of further studies, and to learn through him that others are engaged in careful studies which, I venture to say, will bear fruit. It may be worth while to remark that one great difficulty is the fact that adjacent beds across the stratification may have very great differences, and that flows from cracks and fissures are usually composite. I think, therefore, that at depths where the waters have over 1,000 parts per million

solids, soaking or crushing a mass of rock in a known mass of distilled water may give valuable results.

It is also worth noting, in view of the fact that F. W. Denton found native copper in the hematite of the Soudan Mine and recently R. L. Wahl has found it in the joints of the ore on the Cuyuna Range, that my student, G. W. Coleman, found 11 parts per million of copper in water from the same drill hole I think as that cited by Hotchkiss.

My observations agree entirely with Hotchkiss' comments.

The relative age of the faults is a matter worth very careful consideration. Some may have formed much later than the ore accumulation, some were a product of the slump involved, some antedated and guided the leaching. I think all three exist, but their effect on the leaching, on the accumulation of ore and on the mine water is very different, and if possible this should appear in mapping.

J. F. Kemp in Mining and Metallurgy 1274-M (June 1923) has called attention to this great depth of the soft ore in the Gogebic Range, and infers that "for a very long time in the Keweenawan period the ground water must have stood at great depth and the oxidation must have proceeded to more than 2,000 ft. below the present surface.

It is not yet settled how far the hard magnetic ores are due to a contact effect of Keweenawan intrusives, and how far they may be due to protection from leaching effects. The work at Babbitt and the Berkshire mine has added billions to the available iron ore reserves of the United States.

SURFACE EQUIPMENT FOR IRON MINES.

BY E. S. BONNELL, ISHPEMING, MICH.*

This subject is rather a comprehensive one and may he approached and discussed from several different angles. For instance, if the life of the mine to he equipped will he short, due to a comparatively small deposit of ore, it is evident that the best equipment for such a property will vary quite considerably in some of its essential features and details, from one in which there is a very large tonnage, and the operation of which will extend over a period of time.

Again, if electrical current is to be purchased for operation or made by the mine operators with their own equipment, very radical differences in the power plant and hoisting equipment, and in many of the details, will of themselves naturally arise. And with this added complication, again we must consider the total tonnage to be hoisted, or in other words, the life of the mine.

*Assistant to Mechanical Engineer, The Cleveland-Cliffs Iron Co.

Generally speaking along this line, everything being considered, the shorter the life of the mine, the less expensive and less complicated will be its mechanical equipment with due regard to its efficiency and satisfactory operation. The same can be said of the buildings for housing this equipment. Consequently to simplify the scope of this discussion we will assume an isolated mine 1,000 ft. deep to produce 1,000 tons per day, which purchases its electric power; and in addition, we will presume that we have a deposit of ore of sufficient size to require a long period of years to deplete. In this case the equipment must really be of the best. That means that it must be as efficient as possible, as well as the most dependable and durable. It must be properly installed and well housed, because if installed with reasonable care, there will be the minimum of delays and expense, due to mechanical and other troubles. If properly housed, the upkeep on the buildings and the amount of heat required during the cold seasons is very materially lessened; all of which means cheapened and continuous operation. If, as assumed, our mine is isolated, there will of necessity be required the following equipment and buildings:

AN ELECTRIC SUB-STATION—Containing lightning arresters, transformers and switching devices and arrangements for properly receiving, transforming and distributing the electrical power to various points of consumption. Its capacity will depend upon the size of the operating equipment.

THE POWER PLANT PROPER—Containing hoists, air compressors, a rotary converter with their switch boards and accessories.

A SHAFT HOUSE—Pulley stands, or stocking- trestle, and the haulage engines for stocking ore; perhaps one for rock.

A DRY HOUSE—To accommodate from 175 to 200 men.

GENERAL SHOPS—Including a carpenter shop, blacksmith shop and machine shop.

OFFICES, WAREHOUSE, LABORATORY BUILDINGS, AND A HEATING PLANT—These will be discussed in order under their various headings.

HOISTS—The best practice in iron mines of the type that we have under consideration seems to warrant the installation of two hoists, one for the skips and one for the cage, both operating in balance. The standard practice of The Cleveland-Cliffs Iron Company is to purchase both of these hoists with the same size cylindrical drums and drive them through single reduction herringbone gears, keyed directly to the drum shaft with 400 h.p, induction motors running 360 r.p.m. The diameters of the drums will be 10 ft., and for a mine of 1,000 ft. depth a drum 7 ft. long is very suitable. This will easily take care of 1,100 ft. of rope with approximately 5 turns on each end for safety. The cage hoist will operate with a rope speed of from 500 to 600 ft. per minute and the skill at 900 ft. Both the hoists to be provided with safety devices for overspeeding in both

hoisting and lowering; for overwinding in either direction, for stopping the hoist if an attempt is made to start it in the wrong direction after making the top or bottom landing, etc. The Lilly hoist control has been found satisfactory for this purpose. The various operations it will perform are as follows:

1. It will positively prevent over-speeding in hoisting or lowering.

2. It will sound an alarm when an attempt is made to exceed the normal speed, and will stop the hoist in case the engineer fails to respond to the alarm.

3. It will notify the engineer when to retard the speed of hoist for making the landing at the top or bottom of the shaft, and if the engineer fails to perform the necessary operation, the controller promptly performs the operation for him.

4. It will notify the engineer if the retardation of hoist is not conducted properly within the limits of safety, and if allowed to exceed the limit of safety on approaching the landing, the controller will shut off the power and stop the hoist.

5. It will prevent the cages from being hoisted or lowered beyond the predetermined limit of travel for which the controller is adjusted.

6. It will instantly give an alarm, shut off the power, and apply the brakes, if an attempt is made to start engine in wrung direction after making the top or bottom landing. It will prevent accident in all cases from the improper handling of hoist when hoisting or lowering rock or men. It will apply the brakes as they should be applied by the engineer, when it becomes necessary to operate them. In case the power goes off for any reason, it will immediately apply the brakes, bringing the hoist to a stop.

Estimating the horsepower of the motors for such hoists and making a proper selection of same can be gone into at considerable length, which will not be attempted here. Suffice it to say that for any particular case the various motor manufacturers are always anxious to supply all such information concerning their motors and recommend the proper size and speed for any particular installation. F or roughly estimating the horsepower required, to raise a given load at a given speed, the following may be used:

$$\text{H.p. equals } \frac{\text{gross weight in pounds} \times}{33{,}000} \text{ speed in feet per minute,}$$

and to this should be added approximately 25 to 50 per cent for friction, acceleration, etc., depending on the type of hoist.

Our skips hold approximately 4 tons of ore; 1,100 ft. of 1¼ in. cable weight approximately 2,500 lbs.; 8,000 lbs. ore plus 2,500 lbs. cable is 10,500 lbs., or the unbalanced load which our skip hoist must start, accelerate and hoist. Assume a hoisting speed of 900 f.p.m. and substituting in the above formula, we have:

$$\text{H.p. of motor equals } \frac{10{,}500 \text{ lbs.} \times 900}{33{,}000} \text{ equals 290 h.p.}$$

approximately. Increasing this by 50 per cent equals approximately 435 h.p., or the size of the motor. Induction motors are used on hoists because of their simplicity and ruggedness. A hoist such as described above, complete with switchboard instruments, etc., will cost approximately $18,000, not including installation cost.

AIR COMPRESSOR—In selecting an air compressor, where there is small probability of their ever being more than one such unit, it is well to procure one of ample capacity so that it will easily care for the demands upon it. Too small a compressor means constant complaints from the underground operators on account of a lack of air. If an excessive load is imposed upon the machine, constant mechanical trouble and delays arise, which are not desirable. Under conditions of mining, such as prevail with the Cleveland-Cliffs Company, it is found that an average of 1,860 cu. ft. of air per ton of ore mined is required. The hard ore mines, like the Cliffs Shaft, require the most, 2,500 cu. ft of air per ton, and the soft ore mines, like the Negaunee, at least—or 1,200 cu. ft. We will assume that our mine takes the average amount, or 1,860 cu. ft. of air per ton. Our product is 1,000 tons in 8 hours, therefore

$$\frac{1{,}860 \times 1{,}000}{8 \times 60} \text{ equals 3,900 cu. ft. (approximately) of air per}$$

minute. Thus it will be seen that some latitude is offered in choosing this compressor, inasmuch as practically a total of 4,000 cu. ft. of air per minute is required. One large machine of this capacity may be chosen, or two smaller ones of approximately one-half this capacity. The latter choice is preferable, for a number of reasons, although it is somewhat higher in its initial cost. Better operating conditions are possible with two machines and there is a higher efficiency. In case of a breakdown, one machine is always available, and the mine need not shut down for a lack of air. When the maximum demand for air is past, one machine can be taken off the line and the other run at its full load capacity, which is the most efficient manner of operation. The peak loads due to starting these smaller machines would be only slightly more than one-half of that for the larger compressor, and might result in a better price for power where it is bought on a sliding scale, the price depending to a certain extent on the maximum demand. For this installation we will, therefore, choose the two compressors of, say, 2,400 cu. ft capacity at 100 lbs. discharge pressure. This is liberal enough to take care of any probable demand for air at any time. The compressors will be driven by 450 h.p. synchronous motors operating at 180 r.p.m. A synchronous motor is used for the reason that due to its characteristics it helps to maintain a higher power factor on the operating lines.

The compressors will be of the unloading type, i.e., if only a half or three-quarters of their capacity in air discharge is required, one or more of their inlet valves is automatically held closed and the cylinder does not fill

with free air, thus cutting down the total amount discharged. The compressors will thus operate automatically at full, three-quarter, and half load, with the revolutions per minute remaining the same, due to the synchronous motor.

A compressor with motor switchboard and all starting apparatus complete, but not installed, will cost approximately $10,000 to $12,000.

ROTARY CONVERTER OR MOTOR GENERATOR SET—In selecting a converter it will be assumed that not more than three 6-ton underground locomotives will be necessary to gather and deliver our product of 1,000 tons of ore to the shaft; also that the direct current of the underground lighting system will be furnished by the rotary converter. These locomotives have a rated draw bar pull of 2,400 lbs. on a level track; a maximum pull of 3,000 lbs. for starting and accelerating the loads; and their speed on a level track at this rated pull with a voltage of 250 is 7.5 miles per hour. The number of ore cars of any capacity that can be hauled at one time, of course, depends entirely upon the grade and condition of the tracks. These locomotives are equipped with two direct current motors each capable of developing 37 h.p. maximum; or a total h.p. of 78 to 80 for the locomotive. In starting the load, the motors are thrown in series, and after a proper speed is acquired, they are shifted to parallel. Experience has shown that a 100 k.w. 275 v. rotary converter will handle three of the above motors. This can be verified within reasonable limits by use of the following formulae for estimating the h.p. required for motor haulage:

ulae for estimating the h.p. required for motor haulage:

Motor h.p. equals $\frac{\text{T.e.-m.p.h.}}{375}$ in which T.e. equals tractive effort in pounds and m.p.h. equals miles per hour.

D.p.p. draw bar pull equals 80 per cent effort in pounds.

Assume draw bar pull of 2,400 pounds, then

T.e. equals $\frac{2{,}400 \times 100}{80}$ equals 3,000, substituting in the above formula:

H.p. equals $\frac{3{,}000 \times 7.5}{375}$ equals 60 for one locomotive. Assume two locomotives running and developing their maximum tractive effort pulling trains the total h.p. developed equals 120. Now assume the third locomotive to be starting a load of ore from rest and developing a total h.p. of 80. Adding this to 120 h.p. gives a total of 200 h.p., or 150 k.w. Our 100 k.w. converter with a power factor of unity will develop 150 per cent overload for long periods of time, say two hours or more. From this it will be readily seen that a machine of this capacity is ample for our needs. However, since we are also lighting our underground workings from this converter set, it would not be advisable to try to handle more than the three locomotives with it; especially as there is always a possibility of wanting a small amount of direct current at some remote corner of the workings for a small pump or ventilating fan. The cost of a 100 k.w. rotary converter with switchboards and all starting and operating instruments will cost at present in excess of $10,000.

SHAFT HOUSE—A steel shaft house of the usual construction, completely enclosed and provided with pockets for loading ore directly into cars during the summer shipping season, and a landing platform from which start and radiate the stocking trestles, and on which is carried the operating shanties for the endless rope haulage engines used in stocking ore is required. It will weigh approximately 115 tons and with one or two pulley stands will cost $10,000 to $12,000 at present. A steel stocking trestle similar to the one at the Negaunee Mine, 1,862 ft. long and 42 ft. high, capable of stocking 250,000 tons of ore, will cost at present about $60,000.

Two endless rope haulage plants with 8 ft. diameter rubber lined sheaves driven by 50 h.p. 600 r.p.m. induction motors with round rotors and capable of pulling the 80 cu. ft. saddle back cars at a speed of 1,000 ft. per minute will be used on the stocking trestles. They will cost approximately $4,200, with switchboards and controls: and should take care of the ore as fast as it can be hoisted. The haulage engine can be located at any desirable convenient race under the trestle and near the shaft house, with the operating device and controls located on the landing platform for the convenience of the operator in spotting the car under the skip dump and watching its operation on the tracks of the stocking-trestle. Suffice it to say that the shaft house with all of its secondary and adjacent equipment should be fire proof.

A brick dry or change house 30 ft. x 135 ft. complete with lockers, shower baths, wash stands, a first-aid room, shift boss quarters, toilets, carbide room, etc., capable of accommodating 175 to 200 men, will be provided. It is estimated in this respect that for each 10 tons of ore hoisted one miner is required, and other underground help will likely double this number. This building will cost from $12,000 to $18,000.

A shop building, containing practically 5,000 sq. ft. of floor space, will be required, and should be divided into three adjacent rooms for a blacksmith, carpenter and machine shop. The blacksmith shop should, in addition to its other necessary equipment, be provided with a good steam hammer.

The carpenter shop should have a mortising machine, circle and band saws and a planer.

The machine shop should have at least a large and small lathe, a jumper, wheel press of 150 to 180 tons capacity, and a good medium sized drill press. More desirable would be two drill presses; a small one and a larger radial drill; also a metal planer is very desirable.

If properly planned, these shops may be run with one 25 to 30 h.p. motor. If new equipment is to be purchased, a separate motor drive especially for larger machines would be desirable. Because of a lack of time a close estimate of the shop cost with its equipment could not be had, but it will probably exceed $35,000.

OFFICE, WAREHOUSE AND LABORATORY—An office and warehouse of sufficient size to house all supplies and provide good sanitary working conditions for the clerical

force should be provided. The same can in general be said of the laboratory building.

HEATING PLANT—If the contour of the ground and the general arrangement of all the buildings lends itself to the proper arrangement, a two pipe gravity return heating system can be used and will work very economically. All of the steam pipes, including-the returns, should be accurately laid to grade in conduits and much care used in insulating them, so that all the return water will come back to the boiler at as high a temperature as possible, if the buildings are not too far apart, a central heating plant is the most economical. The amount of steam used for heating a shaft, and on the landing in winter, and the pressure required for drying ore samples in the laboratories raise certain questions which have to he considered or trouble is liable to be experienced. As a rule, none of the hot water from heating a shaft or from the steam used on the landing gets back in the heating system and is likely to cause a serious drag on the boiler.

With these two sources eliminated, a 30 to 35 h.p. boiler, properly installed, should be ample. The heating plant should be located adjacent to the dry; the engine rooms or the machine shop, where one of the regular dry attendants can look after it; thus eliminating the cost of an attendant.

In closing, I note that this subject also includes the mine layout. If we will stop and think of all the mines of The Cleveland-Cliffs Company, or even include those of any other mines with which we are familiar, we are at once struck by the fact that while the equipment at most of them is pretty much the same, and usually about the same cycle of work is gone through with at all of these various properties, yet the general arrangement of buildings and layout for each place differs materially from that of all of the others. This arrangement depends upon so many variables that it would be hard to discuss it or say what it should be for any property until you had all the facts in hand. Some of these may be mentioned as follows:

The location of the orebody with respect to the location of the mine plant. Where is to be found the most desirable place, easily accessible to the railroad, for stocking your ore. The contour of the ground on which the plant is to be located. The amount of ground available for your plant, the street frontage, etc. Each individual mine in this respect has its own problem and for this reason it would be impossible to say just what the proper lay out should be.

DISCUSSION.

MR. KELLY—My preference would be for two compressors of unequal capacity as at certain times only a small amount of air may be required and that one run which would be nearest full capacity.

(Paper presented by E. S. Bonnell at Cleveland-Cliffs Power Club Meeting, held on November 20, 1922.)

REPORT ON THE 1922 LAKE SUPERIOR MINE SAFETY CONFERENCE.

BY GEORGE MARTINSON, HIBBING, MINN.*

Not many years ago, safety was a purely personal problem. Every miner was charged with his own safety. Now, however, safety is a community problem, a problem for all industries. I say community problem because it is one which can never be satisfactorily solved until all operators become interested. There is a tendency to cling to old ways, every new method or idea has to fight for its existence. Men do not oppose the new because they hate progress, but rather because it is easier to cling to the old.

John Ruskin, predicted that the railroads by driving the stages out of business and killing the demand for horses, would ruin the fanner, thereby ruining England. In his autobiography, Thomas Jefferson tells of a neighbor who opposed the public schools because "When everyone could read and write no one would work." In the light of our present knowledge, anyone making such statements would be ridiculed. In the first days of the safety movement in the Lake Superior District, there were many scoffers and others ready to ridicule the efforts of mining companies. There are still those who are prone to speak of "Safety First" in a joking manner, but thanks to the zealous efforts of the really big men in the district they are now very few in number.

I am advised that for many years, the Lake Superior Mining Institute has included in its programs, matters relating to safety, and there is no question but what your efforts have been of inestimable value in promoting the safety movement. You were the pioneers and I am sure that you have never regretted the time spent on this work.

*Range Safety Inspector, Pickands-Mather & Co., and Chairman Lake Superior Mine Safety Conference.

I wonder how many of you realize that safety is a factor in industrial relations, about which there is perfect agreement between owners, managers, employes and the public. Among reasonable men, and most men are reasonable, there can be no difference of opinion concerning the benefits of Accident Prevention work. It is one activity, which if honestly and consistently conducted, benefits everyone. Unfortunately I have no statistics to present for the Lake Superior District in general which would indicate just how much improvement has been noted in accident records during the past decade. I feel sure of my ground, however in stating that there has been a wonderful reduction in non-fatal accidents, for I have the word of several of the largest operators that such is the case. The reduction in non-fatal accidents that some operators have made is sufficient to warrant me in stating that Accident Prevention work is worth while.

Due to the many different methods pursued by the various mine operators and public officials in compiling accident statistics, it is almost impossible to compile a set of figures which would indicate the improvement that has been made. Arthur H. Young, Manager of Industrial Relations for the International Harvester Company, in an article appearing recently in "Safety Engineering," states that the United States Steel Corporation during the period from January 1, 1912 to September 30, 1922, spent in safety work $9,763,063, and using the cost of accidents to the International Harvester Company as a basis for figuring the total saving. He found that $16,542,240 had been saved. This figure is based on the assumption that the frequency rate would have continued to be the same as in 1906, if no effort had been made to reduce accidents. Thus it can be seen that an investment of $9,763,063 saved an expenditure of $16,542,240 or a net saving of $5,779,177.

A substantial part of the operations of the United States Steel Corporation are in the Lake Superior District and their mines have borne an important part in attaining this record. Independent operators report a decrease of lost-time accidents of from 3 to 50 per cent.

In a year like the present when the district is suffering from an acute labor shortage, it is very important to have your employes on the job instead of in the hospital. The operator therefor, who is paying attention to safety is making a substantial saving.

Recognizing that accident prevention work in the Lake Superior District would be benefited materially if the men particularly interested in that phase of mining could occasionally meet and discuss common problems, the Bureau of Mines at the suggestion of some of the mine operators called a conference at Houghton four years ago. Since that time three conferences have been held in Duluth. The 1922 meeting was attended by eighty delegates, representing eleven operating companies. Included in this number were representatives of the Minnesota and Wisconsin Industrial Commissions, Minnesota State Board of Health, and several other organizations. The meeting continued for two clays and papers dealing with various safety problems were presented and fully discussed.

I have been requested to give a brief summary of the proceedings of the meeting. I wish to state that the few minutes I give to this report cannot in any manner do justice to the various papers as they were well written and indicated much thought in their preparation.

In addition to purely safety matters, the problem of mine ventilation was discussed. There was some criticism from certain quarters on account of our discussion of this problem. The objectors stating that ventilation was not a problem that should properly come before our meeting. We feel that this criticism was unjustified. We are willing to grant that ventilation is a special study, but if we can, by discussing this question impress its importance upon the mining industry so they will give it special attention, we feel that we have assisted in accomplishing something of benefit to the industry.

In presenting his paper on Metal Mine Ventilation, Mr. W. H. Carrick of the Bureau of Mines, confined his discussion to the Engineering Problems. He gave in detail the plan used by the Bureau in making a Ventilation Survey, and stated that the oxidation of timber was the chief cause of the heat and carbon dioxide in the mines of the Lake Superior District. As the timber mat gets thicker and larger, more surfaces are exposed to oxidation, and conditions become worse unless mechanical ventilation is resorted to. The discussion of this paper brought, out the fact that there seems to be some difference of opinion among engineers as to whether or not ventilating fans should be of the reversible or non-reversible type. There were able arguments presented for both plans, and it would seem, that anyone who is considering the installation of a ventilating system, should give this matter serious consideration before deciding the matter one way or the other. Mr. J. A. Childs, Engineer for the Minnesota State Board of Health, presented a very able paper, outlining methods of safeguarding water supplies for use in mines. He stated that out of 20,000 examinations conducted by the State Board of Health, only one instance of contamination entering a well through underground channels was discovered thus showing that the contamination of water supplies at their source is usually through faulty construction. Minnesota is one of the few states whose State Board of Health will not accept samples of water for bacteriological examination unless it has been collected by their own representative. Figures were presented which indicated that they had very good reasons for this attitude. Mr. Child's paper evoked considerable discussion and many questions were asked by the delegates present regarding local problems.

Mr. George McCaa of the Bureau of Mines, described what the Bureau is doing to develop a Rescue Apparatus combining all the good and eliminating the objectionable features of the types in use at present.

Mr. A. V. Rohweder of the D. M. &N. and D. & I. R. R. railroads gave an excellent talk on lessons which had been learned from railroad safety work, that could be applied to open pit operations This was very interesting to the men connected in any way win open pit operations.

Mr. W. G. Brown's paper dealing- with open pit lighting, was a description of the Flood Lighting System in use at the Albany mine at Hibbing. This paper was published in Shillings' Mining-Review and has no doubt been read by many of the members of the Lake Superior Mining Institute.

Mr. M. A. Morse of the State Department of Education described the Minnesota plan for the re-education of injured workmen. The Minnesota Compensation Law requires the employer to pay an employe who has partial permanent disability, additional compensation if he

desires to train himself for other work. To many of those in attendance at the conference, this was an absolutely new activity and Mr. Morse proved to them its immense value to the employer, employe and the public.

The State of Wisconsin has incorporated into its compensation law, a provision that where an employe suffers injury due to the neglect of employer to comply with the orders of the Industrial Commission, the employer must pay an added penalty of 15 per cent of the compensation due. This same law also provides that an employe who fails to use the safety devices furnished by the employer and who as a result suffers an injury, is also penalized to the same amount. The result of this legislation was shown in a well prepared paper by Mr. R. McKeown, Engineer for the Wisconsin Industrial Commission.

Mr. B. D. Shove, in his paper, "The Foreman and His Place in Accident Prevention," took the stand that the foreman is the man upon whom the major responsibility for accident prevention rests, and that until all foremen have been educated to appreciate the importance of their efforts, the best results cannot be obtained.

In addition to the papers read, the delegates were addressed by Messrs. J. W. Kreitter, Superintendent of the D. M. & N. Railroad, G. E. Wallis, Editor of the National Safety News, Mr. C. L. Colburn of the National Safety Council, and Mr. W. H. Moulton of The Cleveland-Cliffs Iron Mining Company. A round table discussion led by Mr. William Conibear of The Cleveland-Cliffs Iron Company, proved very interesting, and developed many points that had not been covered in the regular program.

The Lake Superior Mine Safety Conference is not an organization having a regular membership and will exist only so long as the mining companies show their interest in it by sending members of their organization to attend the meetings.

We feel that much good has been accomplished, but that it can serve better in our future meetings if we have representatives of more of the operating companies. To the managers of the various mining companies, we can state that if you send delegates to these conferences you need not feel that your representatives are enjoying a vacation, for such is not the case. Our meetings are for work and our programs are so arranged that not only the safety engineers, but also other members of your organizations, such as superintendents and foremen, would be benefited.

In closing I wish to thank you for your past cooperation and ask you to continue to assist us in our efforts to eliminate in so far as possible the terrible economic waste resulting from industrial accidents.

SLUSHING PRACTICE IN THE MINES OF THE OLIVER IRON MINING COMPANY.

BY FORD E. BOYD, DULUTH, MINN.*

The increasing scarcity of labor is compelling all industries to seek out their most arduous tasks and convert them into mechanical operations which will be less burdensome and more economical in iron ore mining such a task is shoveling ore into underground tram cars or "mucking." Time studies of this operation show that hand mucking comprises from 35 to 50 per cent of the total shift time. Mine managers have therefore devoted a great deal of thought to the solution of this problem, and their efforts have resulted in the production of the underground loader and the familiar drag scraper or slusher.

The history of the underground loader is the history of a great variety of shoveling, conveying and elevating devices some of which have become very complicated in the effort to make them suitable for use under widely varying conditions. None of them are portable and all of them require tracks, and usually, there are few facilities underground for making their repairs. There is nevertheless a definite field for this type of machine and the Oliver Iron Mining Company is using some of the more highly developed types.

The earliest record which has come to our notice of the use of the slusher was in driving the Kellogg tunnel in Idaho in 1898 by the Bunker Hill & Sullivan Mining & Concentrating Company. This tunnel was for the purpose of developing a group of mines worked by them. The equipment consisted of a single drum double cylinder Bacon hoisting engine mounted above the track on a wooden frame, so that tram cars could pass beneath. A second wooden frame with an inclined floor was placed in front of the engine support with the foot of its incline near the end of the drift. This frame was so designed that two one-yard cars would be pushed under the high end of the incline. A No. 1 scraper or slusher loaded with muck or waste was hauled up the incline with the Bacon engine to an opening immediately over the one-yard cars in which it was dumped. Two scraper loads usually filled a car. The material was quartzite and was broken down to a size suitable for scraper use. Five men were employed for this equipment and the capacity was five yards per hour or one yard per man per hour.

*Steam Engineer, Oliver Iron Mining Co.

The earliest record in the Superior District tells of the work of Captain Anderson of the Rogers-Brown Company on the Cuyuna Range. Captain Anderson used a single drum tugger hoist pulling a rake type scraper, and this equipment was used in loading cars in development work only.

The history of the slusher with the Oliver Iron Mining Company dates from 1916 on the Mesaba Range, from 1920 on the Gogebic Range, and from 1921 on the

Vermilion Range. However, it did not come into general use on the Mesaba Range until 1920.

The device was first introduced by the Ingersoll-Rand Company in 1916 at which time many mining companies experimented with it, but nearly all soon abandoned its use due chiefly to difficulty in convincing the miners that it would be to their benefit to use it. The Oliver Iron Mining Company persisted in experiments with it, until finally after many discouragements on the part of those who saw its possibilities it was adopted as a new and permanent development in the art of mining iron ore. Beginning in 1920 its use began to spread to our other mines on the Mesaba Range and it was later put into successful operation in the deep underground mines in the Gogebic and Vermilion Districts.

The history of the development of the tugger hoist as a machine began in 1912 when it was first manufactured by the Ingersoll-Rand Company. It started as a small air-driven single-drum winch for general use around mines as a timber hoist. On account of its portability it was soon brought into the mines for use in slushing. This was a 2½ h.p. machine. In 1920 following a demand for more power, heavier hoists were introduced. These were of the 4 h.p. double-drum type arranged in tandem, i.e. with drum face by face. This machine was bulkier and heavier than the single drum and was purely experimental. Only six were ever built. It was used in our mines both on the Mesaba and the Gogebic Districts, but was soon replaced in the Gogebic District by the present 8 h.p. hoist with drums end to end and on a common shaft, which hoist had been developed exclusively for slushing.

The progress with the single-drum hoist had been so satisfactory at our Mesaba Range mines that the double drum hoist was not taken up, but on the Gogebic Range, where the effort to introduce the single drum had not succeeded clue to the difference in mining methods and to difference in ore the larger h.p. and double drum feature appealed to them and was successfully used from the start.

All hoists used by this Company until the late fall of 1921 were driven by square piston engines of the Dake type as manufactured by the Ingersoll-Rand Company. Since that date we have purchased the “Waugh” machines, manufactured by the Denver Rock Drill Company, which are driven by geared rotary engines; also the “Turbinair” machine, manufactured by the Sullivan Machinery Company, which is driven by a herringbone gear type of turbine engine.

The practice of slushing as developed on the Mesaba Range mines of this Company differs considerably from its practice on the Gogebic Range and Vermilion mines. The practice on the Mesaba Range at the Spruce, Fayal and Leonidas mines in the Eveleth District, at the Wanless mines in the Virginia District, and the Wellington mines in the Chisholm District is adapted to what is known as the “top-slicing” method, of mining. This is shown in general on cut No. 1 and may be briefly described as follows:

A timber drift is run near the top of the ore body and above and parallel to the main level drifts. From this upper drift crosscuts at intervals of 50 ft. are run through the ore body to its boundary wall. These sub-level crosscuts are above and parallel to the main or haulage level crosscuts, and are connected to them by raises spaced from 25 to 35 ft. apart. The pillars of ore obtained by cross cutting are then worked out by slicing at right angles to the crosscuts, the first slice being taken from the boundary and subsequent slices retreating from boundary. These slices extend into the pillar about half way to the next crosscut and are from 8 to 1.4 ft. thick vertically. The raises are so located that each one takes the ore mined from three slices. The ore from the center slice is pulled directly into the raise and by blasting off the corner of a pillar, the ore from the outside slice is then slushed to the raise with little difficulty. Timber is used to support the back of the crosscuts and as the slices are completed the floor is boarded over, then the timbers are blasted down. This eventually forms a mat and prevents the waste material from running through into the workings below. In slicing on the next lower sub-level the ore is removed right up to the floor boards laid down on the sub-level above.

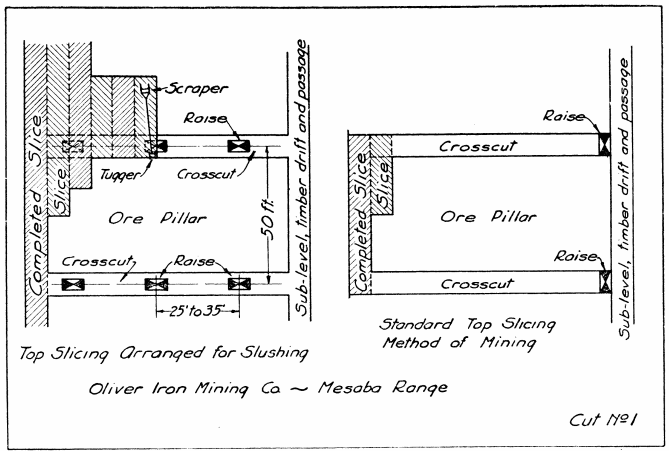

CUT NO. 1—TOP-SLICING ARRANGED FOR SLUSHING, MESABA RANGE.

The tugger hoist is usually fastened to a turntable which is placed back of the raise, that is, so that the raise is between the hoist and the slice, where it is blocked down, or in some cases it is fastened to a bar placed across the drift above the height of a man’s head. One man operates the hoist and another holds the scraper, directing it into the pile. He then follows it to the raise, dumps it, and pulls it back to the pile at the face of the slice. The scraper used holds about 3 cu. ft. and pushes along a total load of 4 or 5 cu. ft. It is usually operated by single-drum hoists. The operators change places at the work and in that way the labor of handling the scraper is made less fatiguing.

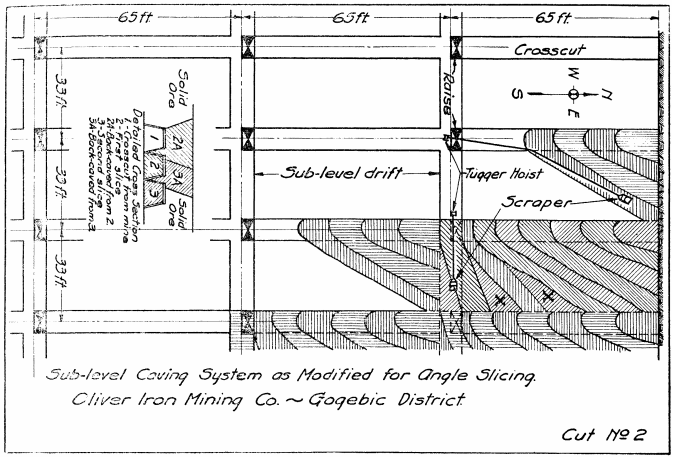

CUT NO. 2—SUB-LEVEL CAVING SYSTEM AS MODIFIED FOR ANGLE SLICING, MESABA RANGE.

The slushing practice in the Gogebic District is adapted to what is known as the sub-level caving system of mining. This mining method differs from the top-slicing method only in that the sub-levels are further apart vertically so that when the ore in the slice itself is removed a pillar is left above the slice, or in other words a very thick back is left. This is removed by caving as the slicing retreats from the boundary. This method of mining was modified at the Pabst mine in 1921 to further facilitate the use of the slusher. In principle the modification is illustrated in Cut No. 2 and may be described as follows:

Two-compartment raises, 4 ft. x 8 ft., 33 ft. center to center, are driven from the main-level drift at an angle of 65 deg. and are holed through to the sub-level. From these raises, crosscuts are driven connecting raises in a north and south line and drifts are driven 65 ft. apart connecting raises in an east and west line, making blocks which are 25 ft. x 57 ft. in plan. All sub-level drifts are timbered with 7 ft. timber and sub-levels are spaced 18 ft. apart vertically. The slices are driven at an angle to the crosscut. This method of extraction is locally called “Sub-caving and slicing.”

The first block to be caved is the hanging block farthest from the shaft which, in the case under consideration, is the northeast block. This is mined from the crosscut adjacent to it on the west and radial slices start from this crosscut. The first slice is started three sets back from the hanging boundary and driven at an angle of 15 deg. to the crosscut until it reaches the ore limits. Rock and broken timber are thrown into the crosscut. Particular care is taken that the timbering in the crosscut stands intact. Then, commencing at the hanging limits, the ore in the back over the crosscut is caved into the slice drift by taking out two lagging from the upper left hand corner of the slice which gives an opening of about 8 or 10 in. wide. Through this opening the ground is drilled and blasted to the floor of the slice where the scraper pulls it to the raise. About one-quarter of the ore in the back above the slice-drift is also taken down through this opening. Retreating is clone one set at a time until the intersection of the crosscut and slice-drift is reached. A second slice is then started from the crosscut adjacent to the first one and at an angle with the crosscut slightly greater than that of the first slice. When this slice-drift reaches the ore limits the ore in the back over the first slice is caved into the second slice-drift in the same manner as above. A portion of the back over the second slice is also taken and retreat carried on until the intersection with the crosscut is reached.

Each succeeding slice-drift is driven as before at an increasing angle to the crosscut and then mined back until finally the drift on the south of the block has been reached, when it is also caved back to the raise. In this method of mining, care is taken to preserve intact the slice-drift in which retreating is carried on. Too large an amount of the ore in the back of this slice must not be taken as it will create a place of weakness and trouble will be encountered in driving the succeeding slice. The tugger hoist is rigged up south of the raise until the angle of the slice-drift exceeds 30 deg, with the crosscut; then it is set up on the west side of the raise. The scraper will glide around an angle of 30 deg. with ease and snatch-blocks are not necessary.

While the first block is being mined, the blocks immediately adjacent to it on the west and south are being opened up and caving started. In this manner the area is caved back in a series of steps. Cut No. 2 will show the caving back of several blocks in various stages of completion and also the position of tugger hoists. The cross section shows the areas caved in each slice. By allowing several sets of ore to stand around the raise and using the raise as an axis, 180 or 270 deg. of arc can be mined to one point if necessary. Unless unusual conditions demand it, however, nothing is gained by so doing.

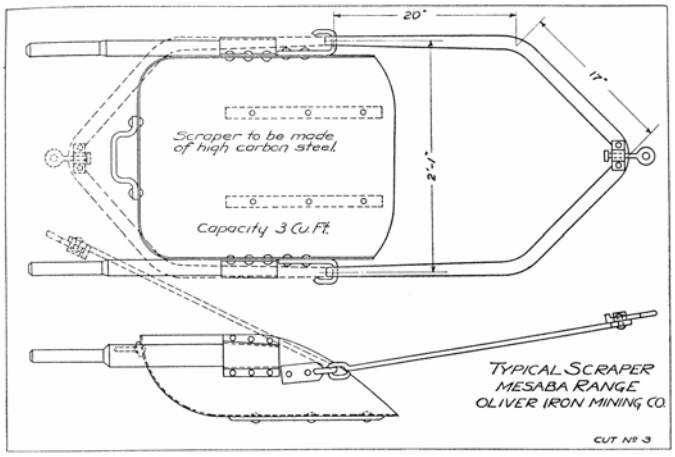

CUT NO. 3—TYPICAL SCRAPER, MESABA RANGE.

The Vermilion Range practice follows the Mesaba Range method of top-slicing but adopts the angle-slice layout where convenient. It also uses the double-drum hoist exclusively. However the angle-slice method had been used in removing pillars at the Pioneer mines previous to its adoption in our Gogebic mines as a standard mining method. The method of using it varies somewhat from that described above. The crosscut is

extended from the sub-level drifts to the boundary and the first slice is taken from the crosscut about 20 ft. from the boundary at an angle of approximately 15 deg. The second slice starts at the raise and runs up to the boundary along the side of the first slice. The third slice starts on the side of the second slice 25 or 30 ft. from the boundary and extends to the boundary along the side of the second slice. The fourth slice starts at the raise and extends to the boundary along the side of the third slice. In other words the system consists of alternating slices, short and long. This idea is illustrated roughly on two slices on Cut No. 2 at "X." The type of slusher used also differs greatly between the various mines. Cut No. 3 shows a typical Mesaba Range slusher equipped with handles. Cut No. 4 shows a typical Gogebic Range slusher and Cut No. 5 shows a typical Vermilion Range slusher.

The questions arises very often as to why a different slusher is used in each district. The reason for the use of the slusher with handles as illustrated in Cut No. 3 is primarily on account; of the method of mining. As a rule we open up only two slices wide before blasting down and where we prop the slice we can carry the scraper around the props into any place that a man can go. The slices are from 12 to 14 ft. in height and we have to timber from the bottom to the back in all cases. We do not draw any ore from the back. The single-drum machine is light, about 300 lbs., and this enables two men to move it about without the assistance of other gangs.

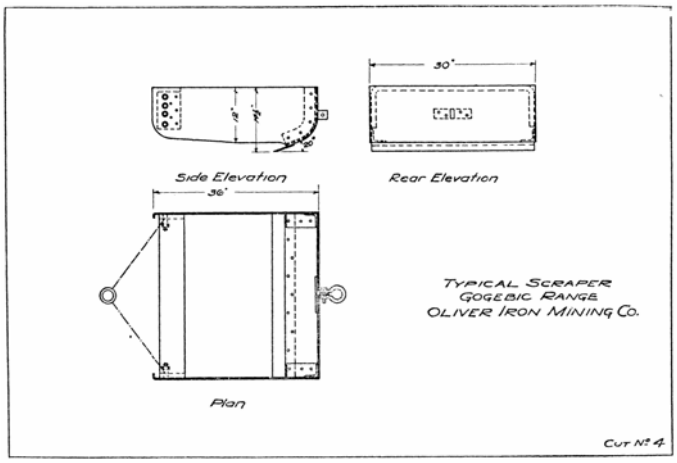

CUT NO. 4—TYPICAL SCRAPER, GOGEBIC RANGE.

The reason for the use of the box type scraper as shown in Cut No. 4 is that the material is soft hematite ore and can be very easily handled with a scraper having sides though the angle of the cutting edge must be right and for our Gogebic mines we find 20 deg, the proper angle. The reason we have the scraper only 30 in. wide is that the ground is very heavy and we must be continually re-lining and propping between the original sets and a scraper of larger dimensions could not be used and pass through the smaller openings. For this reason the sides of the scraper are made smooth with countersunk rivets and no projecting parts. Double-drum hoists are used because they are still in the portable class, not weighing over 650 lbs. Their speed averages about 180 ft. per minute and we can pull any load up to one ton. Also this eliminates the pulling of the scraper back by man power.

The reason for the use of the rake type scraper shown in Cut No. 5 is that the other scrapers will not dig into the ore; the Mesaba because it is too light and the Gogebic type because of the flat bottom and sides. The scraper must have teeth to dig out the chunks. Where fine ore is encountered the slusher is turned over and the flat side is used. This makes a very flexible type of draper and it works out admirably where there are these two kinds of ore to mine.

As mentioned earlier there is as definite a field for the use of underground loaders as for the use of slushers and quite naturally there is also a twilight zone which combines desirable features of both system. The Roger and Sullivan application was not at that time recognized as such a case because neither the underground loader nor the slusher had been developed. However, now that this development has occurred we have many schemes which attempt to adapt slushing to tram car loading by using the inclined plane and slusher hoist.

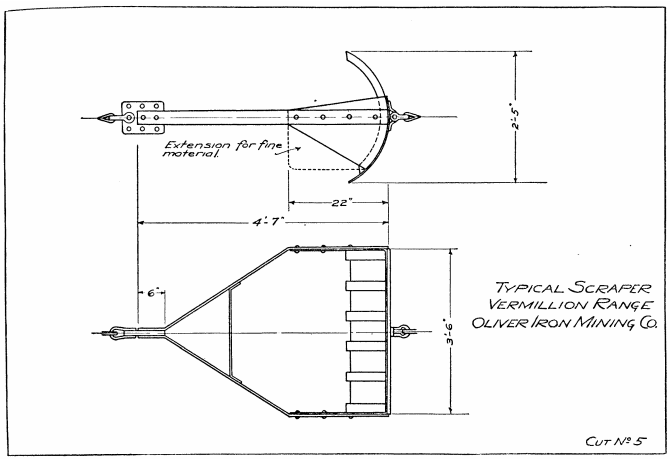

CUT NO. 5—TYPICAL SCRAPER, VERMILLION RANGE.

On the Mesaba Range cars are frequently loaded by hauling the slusher up an inclined plank and dumping it directly into the cars. This is principally used on main levels in ore. In the Gogebic District this operation has been carried much further and a machine has been developed which consists of a steel truck frame mounted on wheels with a folding slide and the hoist is mounted on the deck of the truck and the scraper is hauled up the slide by this hoist from which position the ore is dropped into a car. Cut No. 6 shows this device and it will be noticed that in regard to portability, simplicity and flexibility it is superior to the Roger and Sullivan method and is the equal of the underground loader. It is the statement of our operators that in main level drifting in solid ground where the mucking is easy, it competes successfully with the standard underground loaders and at an initial cost for the device of but one-third of that of a loader. It is not unlikely that it will eventually supersede it.

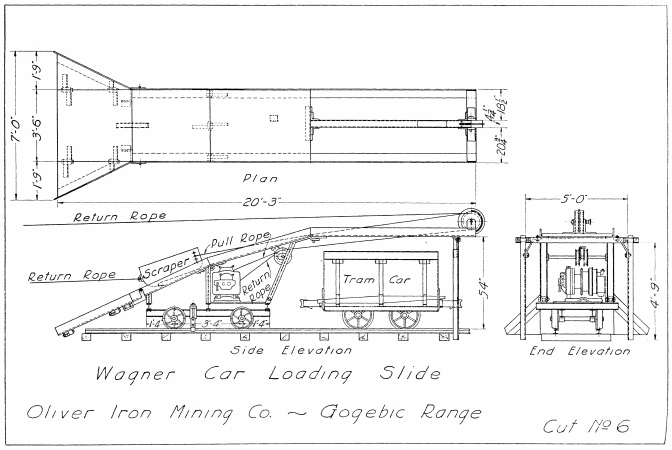

CUT NO. 6—WAGNER CAR LOADING SLIDE, GOGEBIC RANGE.

Many other uses have been found for the slusher hoist, chief among these is the spreading of coal piles. We receive our coal in cargoes and it is dumped into the pile from trestles. By using tuggers to spread these piles the capacity of the trestle can be greatly increased and the work accomplished in a fraction of the time for hand labor. The cost is also greatly reduced. The hoist is usually mounted at the edge of the pile sometimes on a movable platform and the block is attached to the trestle.

Still another use is found in the cleaning up of rock on the sides of open pits. On the bench which is to be cleaned two iron stakes are driven in the ground about 50 ft. apart, between which is stretched a chain to which the block is fastened by means of a grab hook. The hoist is mounted on a high frame work and on the next bench lower but distant not more than 75 ft. from the chain, depending upon the area to be cleaned. The dirt is then scraped off the edge of the bench.

The slusher hoist has also been found advantageous in preparing stockpile sites.

Present developments now indicate that the air-operated hoist, in order to maintain its present portability, will not exceed 750 lbs. in weight and the horsepower will not exceed ten. This company is now experimenting with the electrically-operated hoist but so far has not obtained results which point to the displacement of the air-operated machines. The advocates of the electric hoist claim quietness and not more than 25 per cent of the power consumption which is required by the air machine. The adherents of the air hoist claim greater mechanical reliability and less expense in upkeep with the elimination of fire hazards.

In conclusion we wish to repeat that slushing is now firmly established as a mining method by our Company and we have thought it would he interesting to state to what extent it is so established.

On the Mesaba Range, that is, in the Chisholm, Eveleth, and Virginia Districts we have in actual use 82 single-drum slusher hoists and 8 double-drum hoists. The percentage of the total production handled by them runs from 62 to 100 per cent and the percentage of increase in production of gangs using the slusher hoist over gangs hand-slushing varies from 18 to 35 per cent.

In our deep mines, as on the Vermilion and Gogebic Ranges, we have 64 double-drum hoists in operation and no single-drum hoists. The percentage of the total production handled varies from 24 to 65 per cent and the increase in production varies from 63 to 107 per cent. These results seem to indicate that the double-drum hoist will produce a greater increase over hand-slushing than the single-drum hoist. It also has an additional advantage since it decreases the work required of the operators.

THE WEAR AND CARE OF WIRE ROPE.

BY WILLIAM CONSTABLE, DULUTH, MINN.*

Wire rope is in itself the most reliable of all structural materials, but it is also a sensitive and complex structure. Therefore, in order to obtain the most satisfactory results from a wire rope, it is necessary to follow certain definite rules, and if these rules are ignorantly or otherwise disregarded, short rope life and often disaster is the result. Hence, by the application of a few of the more important rules by the user towards the care of wire rope, the abuse will be considerably reduced and better rope life will result.

*Mechanical and Electrical Engineer, Republic Iron & Steel Co.

HOISTING AND HAULAGE—The ropes used for this class of service range in sizes anywhere from 1” dia. to 2¾” dia. and lengths suitable to meet conditions.

Drums used for hoisting and haulage purposes should be made of cast steel material whenever a cast iron drum shows wear, and as large in diameter as practicable. The use of a grooved drum is far better and more economical than a flat face drum. Where a flat face drum is used it is absolutely necessary that the first layer wind uniformly to guide the additional layers because the first layer of rope on the drum is the groove for all additional layers. This can be greatly aided by using a steel starting piece to guide the first wrap of the first layer so that the rope may be wound on the drum in a true helix, otherwise the rope may wind in a wavy manner causing severe abrasion to the rope due to this condition.

When installing a new rope on a flat face drum, care should be taken not to hammer hard each additional wrap of idle rope against the adjacent wrap already on the drum, it is only necessary to tap with a light hammer and wooden block to bear against the adjacent wrap of rope. If this is done too forcibly it will reduce the pitch of the first layer by interlocking of the idle wraps of first layer and the second and additional layers of rope will be subject to severe abrasion due to close winding of the first layer. Furthermore, to avoid interlocking of ropes on installations winding only one layer on a small diameter straight face drum with a severe fleet angle existing, it is

preferable to use a left lay rope when overwind rope winds from right to left and under-wind rope winds from left to right. A right lay rope is preferable when the under-wind rope winds from right to left and the overwind rope winds from left to right. There should always be at least three to four turns of dead rope left on a drum.

Where severe rope abrasion occurs at flanges when changing from one layer to another, or at other points due to the crossover, it is advisable to order a little reserve rope to permit the cutting off of the rope at the drum end at frequent intervals. Where there is not much reserve rope on the drum and where the abuse is quite severe and requiring frequent cutting at the drum end, it has in some cases been found satisfactory to cut 30" at a time every three or four weeks. In other cases these need not be cut oftener than three or four months. This will depend upon the total rope life and the rapidity of rope wear on the drum.

As stated before a grooved drum is more economical and wherever feasible it is strongly recommended in preference to a flat face drum. Where a grooved drum is used, and rope wound more than one layer the pitch of the grooves should be not more nor less than ⅛" larger than the rope diameter; this will give an ideal winding condition of the first layer, if the fleet angle is not too great, and will permit a good groove condition for the second layer. If the pitch is too small it is apt to cause crowding or rubbing of one wrap of rope against the other and if a second or third layer is added on a close pitch groove drum the additional layers of rope will be subject to severe abrasion. The grooves should also be made of a slightly larger radius than the rope so that the rope will not wedge or pinch in the groove.

Another advantage of a grooved drum is that the rope in the groove is given a far better and continuous support, hence the actual radial pressure of rope on drum becomes less and more uniform and not concentrated as when a flat face drum is used. It will be found that most of the latest high speed hoist installations are using grooved drums. It is the general practice for the diameter of a drum to be not less than 60 times the rope diameter.

SHEAVES—The head sheave of a shaft hoist installation has a great bearing on the life of the rope and if they are not made of the proper material nor machined true and their upkeep is neglected, good rope service will not be secured. Sheaves are generally made of cast iron, cast steel, or manganese steel. If a cast iron sheave does not wear with any given rope tension, it will be satisfactory to use cast iron. If, however, the cast iron sheave wears so much as to influence the life of the rope a cast steel sheave should be used but if a cast steel sheave wears so much as to influence the life of the rope, then a manganese steel sheave should be used if other operating conditions permit.

It is very necessary that head sheaves be machined very true, round and in perfect balance if good rope service is to be secured. It is also very important that the sheave is in alignment with the center line of the drum or if the drum is not entirely filled it should be in line with the center of that portion of the drum on which the rope winds, to avoid sheave flange wear as much as possible, which is caused by the rope fleeting back and forth across the drum. It is almost impossible to exercise too much care and attention for the prevention of side flange wear but is also very dangerous if a portion of the sheave flange cracks and breaks out, throwing the rope out of the sheave groove.

With high speed hoists, the head sheaves should be as light as possible. Where a sheave of heavy section is used, there is a tendency for the ropes to slip on the sheave when the velocity of winding changes quickly which will wear the rope very severely. If sheaves become badly scored or the groove diameters are worn small from a rope which has been in service for a considerable time it is most advisable to change the sheave or turn out the grooves before a new rope is installed, to insure the best condition for rope service in the future. A pinching groove condition should be avoided with a new rope as this results in a restriction of the rope rotation and the strand movement. The general practice is to have a groove diameter slightly larger than the rope diameter and the following groove diameters are recommended for new and re-machined grooves:

For rope ¾" to 1¼" dia.—1/16" larger grooved diameter.

For ropes 15/16" to 2½" dia.—⅛" larger grooved diameter.

For ropes 2⅝" up—3/16" larger grooved diameter.

In regard to the proper diameter sheave for a certain size rope, the general practice is to figure it at 72 times the rope diameter, but 80 times the rope diameter would be better.

FLEET ANGLE—The fleet angle is the maximum angle formed by a line running through the center line of the head sheave at right angles with the center line of the drum and a line running from the center of the head sheave to the center line of the outermost wrap of rope on the drum. This angle should be kept as small as possible. The permissible fleet angle for shaft hoists is stated by some authorities as a maximum of 1½ degrees, but others allow 2 degrees as a maximum. These values are governed by a number of conditions, for example, a 2-degree maximum fleet angle may be permissible for large diameter grooved drums, but without question where a small diameter straight faced drum is used a maximum fleet angle of 1½ degrees is excessive. Too large a fleet angle results in an overlapping of the rope on the drum which should be avoided as it will mash, distort, and severely abrade the rope causing a short rope life. Many ropes have been decreased in life from thirty to fifty per cent because of this condition. As the fleet angle is governed by many conditions, before installing a new equipment it would be very advisable to submit all data to the rope engineer for his examination, study and suggestions from a wire rope viewpoint.

ATTACHMENT TO CAGE OR SKIP—Where the rope is attached to the cage or skip it is most advisable to use a wire rope socket with zinc attachment, which attachment, when properly made, will develop the full strength of the rope. If a socket attachment is used it will be necessary to cut off the end of the rope at frequent intervals and re-socket it again. This should be done at six equal intervals during the life of the rope and the rope should be cut anywhere from 2 to 20 ft depending upon the deterioration of the rope near the attachment. This is necessary because a rope running over a head sheave of a hoist is restricted in rotation due to the friction of the rope in the groove of the sheave. This accumulates an excess of twist in the rope at the socket. This accumulation of twist together with the constant vibration of the running rope, concentrating at the socket attachment, causes an additional fatiguing action in the steel wires which requires that this portion he cut off at frequent intervals. An additional length of rope should be ordered to meet the condition.

Where clips are used for an attachment, be sure that the "U" bolt bears on the slack side of the rope. Otherwise a crimp is placed on the tension side of the rope, damaging it and at this point the rope generally fails. Be sure to use a sufficient number of clips to properly hold the rope and the larger the rope diameter the greater number of clips are required. Clips should be spaced so that the distance between center line of slips is equal to six times the rope diameter. It is very important that the nuts are tightened up frequently when the rope is put into service, because the stretch of the rope reduces the holding power and may cause an accident. It is also considered advisable to re-clip an attachment in case of re-socketing. Where the clip attachment is used it is advisable to use a solid thimble so that the pin hole may be offset from the center line of the thimble a distance equal to one-half the rope diameter so that the pull of the rope may come in direct line with the bear of the pin.

In shaft hoist or haulage work, if a shut-down becomes necessary, the rope should not hang in the shaft or lay out on the slope but both skips or cages should be brought to the surface with the rope wound on the engine drums so that if thoroughly lubricated they will be protected from deterioration.

HAULAGE—In inclined haulage work a good track equipment is very essential. Care should be taken regarding the true alignment of sheaves and track rollers. These should be well lubricated so that the rope may ride with the least possible friction. Rollers often stop or freeze fast and though made of softer material will cause wear on the rope. Knuckle sheaves should be located at points where change of direction of rope is such that the length of the arc of contact is six times the rope diameter or more. The knuckle sheave diameter should not be less than 48 times the rope diameter for 6x19 construction, nor 84 times for 6x7 construction and should be equipped with properly machined grooves.

Abrasion and rubbing of rope on an incline haulage should be avoided by the proper installation of rollers. Considering the rollers on a uniform grade, it is found economical to use the wide mouth type of track roller which should be not less than 6 times the rope diameter and they should be spaced 25 to 30 ft. part. If it is found that this system of track equipment wears down quickly it may be necessary to install steel sheaves.

In both hoisting and haulage work it is very important to avoid high accelerating stresses. It may not, on the surface, appear dangerous to the wire structure but if the comparison were made of the micro-structure of the steel before and after such stressing a visible change would be perceptible. It is by far the wisest plan to apply the load gradually so that the rope may not be subjected to sudden stresses which have a great bearing on the life of a rope.

Overloading a wire rope is also very detrimental toward good rope life and should be avoided and guarded against. The safety factor should not be less than that specified in the wire rope catalogs and for short lengths of rope the safety factor should be increased.

ROPES FOR EXCAVATING SHOVELS—Shovels are being largely used for dry land excavation, for railroad, canal or irrigation work. A good many of the most modern shovels today use wire rope exclusively for digging in place of chain which was formerly considered indispensable for shovel work. Ropes for this class of service range in sizes from ¾" dia. for boom ropes up to 2⅛" dia. for main hoist ropes, as used on one of the largest type.

When installing a new rope on a shovel care should be taken not to damage the rope in any way nor cause it to become kinked, for any abuse incurred by a shovel rope during installation may cause an early failure. After removing an old rope, and before installing the new one, examine all the sheaves carefully and check the groove diameters accurately to see that they have not been worn small nor scored by the old rope. A sheave groove which has been worn down to- the diameter of the worn rope which is generally less than the diameter of the new rope, will cause a pinching action on the new rope resulting in the new rope becoming damaged in the first few days of operation. It would be much cheaper to re-machine the worn groove to the proper groove diameter or replace the sheave before installing the new rope.

Avoid the rubbing of the rope on the steel structure of the boom by installing guide rollers. Where such rollers are installed the bearings must be kept well-greased so they will always be free to revolve. If this is neglected and rollers become fast the ropes continually rubbing over them will severely wear the rope and shorten its life. Precautions should be taken against sudden heavy digging stresses as the normal load stresses run high in this class of work. Furthermore, a good operator will avoid reckless handling which is apt to impart severe damage to the ropes. The rope should wind uniformly on the drum and avoid the piling up of the rope on the drum in one place as this will mash and abrade the rope and greatly reduce its life. It is also important where

possible to have the drum of sufficient diameter and length so that the rope may wind upon it in one layer.

GENERAL.

SEIZINGS—As stated before, a wire rope is a mechanism of somewhat complex construction and its original efficiency can only be retained as a unit when it is not distorted. In the manufacture of wire rope great care is exercised to twist the wire in the strands and the strands in the rope under uniform tension. Therefore, it is very important that the ends of a wire rope are properly secured with the proper number of wire seizings. If the ends are not properly secured, the original relation of tension, as manufactured will be disturbed and the maximum service will not be secured due to the fact that some strands are carrying the greater portion of the load.

When cutting steel wire rope, it is very essential to place three sets of seizings each side of the cut to prevent disturbing the uniformity of the rope. Use annealed iron wire for seizing purposes.

RIGHT AND WRONG WAY OF HANDLING ROPE—When installing a piece of wire rope it is not probable that any one would intentionally mishandle it, nevertheless, a word of caution should be given. In the first place, a wire rope should not be handled like a manila rope for it is structurally different. It must not be uncoiled like a hemp rope. A wire rope received in a coil should be unrolled on the ground like a hoop and straightened out before attempting to pass it around the sheaves. Where long lengths of rope are shipped on reels the reels should be jacked up on a shaft at a point convenient to the installation and allowed to unwind slowly until the entire length of rope has been installed. Avoid kinking a rope when installing it for if a rope is kinked during installation it is almost certain to fail in service at that point.

When handling a Lang lay rope never wind directly from the reel or coil to the drum. Lay out rope in full length if possible or set the reel or coil as far from the drum as possible. A Lang lay rope is more springy than a regular lay and should be carefully installed and where possible always keep tension on the rope.

LUBRICATION—Lubrication of a wire rope is highly important as it performs two necessary functions; that is, to reduce internal and surface friction and to prevent corrosion. Ropes being operated in vapors or fumes, or in water must be thoroughly lubricated to prevent corrosion. There is not much value in a lubricant which will run easily and drip from the rope. The ideal lubricant is one which will not harden upon exposure nor at low temperatures and which can be made thin enough to penetrate. Therefore, a lubricant applied hot will generally give good service because in its heated condition it will penetrate and then upon cooling will congeal into a plastic filler throughout the rope.

A wire rope operating over sheaves must be well lubricated because it is subjected to considerable internal friction and in order to overcome this friction the lubrication must be such that it will work in between the wires of the strands thus permitting the wires to be free to adjust themselves to all degrees of bending.

CONNECTIONS—Wherever a spliced eye, clip or clamp connection is used it is very necessary to use a wire rope thimble, around which the rope is passed to protect it from becoming mashed and distorted when strain is applied to the rope.

REVERSE BENDING—Reverse bending; that is, passing of a rope over one sheave in one direction and over a second sheave in the opposite direction, so that the two bends are diametrically opposite. This is an exceedingly severe condition of rope service and its use should be avoided wherever possible. The use of a reversed bend will wear out a wire rope more rapidly than straight bending. The result of a reverse bend is similar to taking a sample or wire and bending it backward and forward until it breaks at the point of bending. It is quite surprising how few reverse bends are required to cause failure, therefore, where a wire rope is subject to similar reverse bends short rope life will result.

NOTE—The author is indebted to one of the leading rope manufacturers for valuable information in the preparation of this paper.

A BRIEF HISTORY OF THE CUYUNA RANGE.

BY J. WILBUR VAN EVERA, CROSBY, MINN.*

The engineers who first surveyed the territory now comprising the Cuyuna Range for the United States government, made note of the magnetic attraction that caused their compasses to vary from the true magnetic north. No outcrops of any sort have ever been recorded in the area now comprising the Cuyuna Range. In the late nineties, Henry Paagri (pronounced Perry), who up to the time of his death a few years ago lived at New York Mills, Minnesota, attempted to put down a few test pits in sections 28 and 32, T. 46, R. 29. Paagri, a Finn of little education, had worked for some geologists on the Michigan iron ranges and had learned that rocks which caused a variation of the magnetic needle were indicative of iron ore. He had discovered a strong magnetic attraction in the northern part of T. 46, R. 29, which is now called the North Range, and the attraction in T. 45, R. 29, on what is now the South Range, and he located his test pits in what was to be the trough between these attractions. Paagri was unable to get very far below surface on account of water, but his efforts were a source of some encouragement to the later prospectors and his caved-in test pits were mute evidence that some other optimist had spent his labor and his money to prove that the district contained valuable mineral.

It remained for Cuyler Adams, however, first to make a systematic study of and accurately map out the lines of magnetic attraction which more or less defines the area

now known as the Cuyuna Range. Adams applied an engineer's training and the experience of a life time on the frontier, to the work of developing the range. In 1904 he started a modern drill outfit in the SW¼ of SW¼ section 16, T. 46, R. 28, and after boring through 170 ft. of overburden, struck ore formation.

About this same time the United States Steel Corporation did some drilling south of Kimberley near Dam Lake in section 35, T. 47, R. 25, where the chief geological feature, besides the presence of considerable float ore, was a small outcrop of quartzite that was then thought to bear some relation to the Pokegama quartzite which lay at the base of the iron formation on the Mesa'ba Range. The result of this work was evidently not encouraging and it was not long continued.

*Mining Engineer,

The result of Adams' work near Deerwood, however, was the beginning of a period of intense exploitation of the Cuyuna Range. In 1915, Pickands, Mather & Company took an option on lands owned by Adams and associates in section 8, T. 45, R. 29, and a year later reached the ledge of the first successful shaft on the Cuyuna Range. The Shenango Furnace Company became actively interested in exploring lands on the South Range, which work was done under the direction of Walter A. Barrows; the Northern Pacific Railway Company, interested in building up traffic for their line which traversed the entire length of the South Range, explored thousands of acres of fee and leased lands. The latter under the direction of Dr. C. K. Leith, and later of Carl Zapffe, proved up many millions of tons of ore as yet largely untouched but which will at some future time find its way to the hearths of the increasing number of blast furnaces.

On the North Range, a drill was started by Adams and associates in 1905, near Rabbit Lake on what has since been developed as the Kennedy mine. Ore was found, and the southern part of T. 47, R. 28 and the northern part of T. 46, R. 29, became a scene of the greatest activity. The lands on the South Range had been the subject of much speculation and by this time were very largely in the hands of Adams and associates and the Northern Pacific Railway Company. The North Range was the immediate center of a scramble for fee lands and leases. George H. Crosby and William Harrison, R. B. Whiteside and Louis Rouchleau, R. C. Jamieson and D. C. Peacock, B. Magoffin and the C. M. Hill Lumber Company interests were prominent among those, who, with their enthusiasm and energy and money (and their friends' money), gave the district a real boost, the momentum of which carried it to the stage of a producing iron ore district.

Here the history of the Cuyuna Range became involved with the energetic personality of George H. Crosby. His unwavering faith in the district, his contagious enthusiasm, his energy and resourcefulness, played a most important part in the development of the North Range from this point on, in much the same manner as the personality of Cuyler Adams led the way and forced the recognition of the South Range and the Cuyuna District as a whole. In 1906 the Corporation again stepped into the district and undertook to sink an exploration shaft on the ore proven up by Adams near Rabbit Lake. They did not go very far and withdrew from the Range. Pickands, Mather & Company withdrew from the South Range, and the Shenango Furnace Company contented itself with the purchase of a few tracts of unexplored land in fee. But the enthusiasm of the men who had come in to speculate was born of the faith of the true prospector. It was their courage and faith and energy that enabled the Range to withstand the shock of these turndowns, and in 1908 the Rogers Brown Ore Company was induced to develop the ore body on Rabbit Lake that has since become the Kennedy mine.

Between the years 1908 and 1912, the exploitation on the North Range was carried on at high pitch. The drills moved westward from the Kennedy mine. B. Magoffin, Roger R. Hill and the C. M. Hill Lumber Company found high grade ore on what is now the Armour No. 1 mine in the village of Ironton, and followed this formation along, exploring the ore bodies now developed as the Feigh and Hillcrest mines. Chisholm and Williams did some deep drilling in section 1 in Crosby, showing over a thousand feet of mineralized iron formation but no merchantable ore. H. B. Blackwood and the Yawkey Estate interests also conducted deep explorations in section 1. C. Neimeyer, and Messrs. Gaylord & Guith drilled and found ore on what was afterward the Haley forty of the Thompson mine. George H. Crosby and associates located ore bodies which were afterwards called the State Pit and the Keating forty of the Thompson mine. The Crosby interests also followed this productive trend through what is now known as the Huntington and Martin mine, and Nelson and Carlson developed merchantable ore on what was afterwards to be the Rowe mine. In 1912 the Congdon interests and D. T. Adams explored a large tonnage of manganiferous iron ore in section 19, now the Sagamore mine, which was thought at that time to be not merchantable, and shortly thereafter at the instance of Jamieson and Peacock and A. F. Gross, the Northern Pacific Railroad interests explored a high grade bessemer ore body in Crosby at what is now the Croft mine. On the South Range, the work of W. D. Edson, C. S. White, Ernest Ledoux and William Rock supplemented the extensive activities of Adams and the Northern Pacific.

In 1910 the Cuyuna Iron Range Railway was organized and in this Cuyler Adams and James A. Ferguson played important parts. It was taken over by the Soo Line and in 1910 the North Range had railroad service and the towns of Cuyuna, Crosby, Ironton and Riverton were platted near the explored but as yet undeveloped ore bodies of the Range. The first shipment of ore was made from the Kennedy mine in 1911. In the same year the Northern Pacific built from Deerwood into the North Range, and again Cuyler Adams was prominent in the organization of their branch line, the Cuyuna Northern Railroad.

The history of the Range from the building of the railroad on is one of development rather than exploitation. The Rogers Brown, interests moved down the Range from the Kennedy and in 1910 took leases on the high grade ore bodies proven up at what were to be the Armour No. 1, the Armour No. 2 and Meacham mines. The Inland Steel Company at the same time took over the Thompson mine and the State Pit and in 1912 the Tod-Stambaugh Company took the Pennington mine. By 1912 the North Range was an established iron ore producing district.

The development of the South Range was not so well favored. After the withdrawal of Pickands, Mather & Company from the district, the Rogers Brown Ore Company started a drop shaft on the property now known as the Adams mine in section 30, T. 46, Range 28, but abandoned it. In 1911, M. A. Hanna & Company leased the Barrows mine, four miles west of Brainerd, and after an expensive development during which some 50,000 tons of ore were shipped, this property was abandoned. The Adams mine was finally successfully opened up by Cuyler Adams in 1912 and 1913, but it was closed down in 1914 and though completely developed and equipped, has been idle since that time. The Wilcox mine in section 13, T. 45, R. 30, was developed in 1912 and 1913 through the activities of Jamieson and Peacock and in the years 191.5 to 1919 shipped a total of 279,000 tons, the largest tonnage taken from any mine on the South Range. For the past four years it too has been idle. Several other shafts have been sunk in the vicinity of Brainerd but all have been idle for some years past. The South Range is waiting for that turn of the wheel that is bound to come, which will call for its ores to maintain the volume of the ever increasing stream that flows down the Great Lakes to the eastern blast furnaces.

Development of Mining Methods.

The early developments indicated that the Cuyuna Range ores were capable of being won only by underground methods. The sinking of shafts through the sandy and undrained overburden presented a serious problem and at one time it was thought necessary to use the air lock concrete cylinder shafts which the Foundation Company of New York had successfully sunk on the Mesaba Range. However, since 1912 when the last shaft sunk by the Foundation Company was completed, all of the shafts have been either lath or timber drop shafts, principally the former. The problem of sinking shafts on the Cuyuna Range is no longer considered a deterring factor.

In 1912 two new undertakings are to be recorded. The stripping of the Pennington open pit was commenced and the removal of the overburden from the Rowe mine by use of a hydraulic stream and sand pump was initiated. To P. H. Nelson of Duluth must be given the credit for bringing to the Lake Superior District, from the phosphate mines of Florida, the idea of hydraulic stripping, and to J. C. Barr and J. W. Westcott, manager and superintendent for the Pittsburgh Steel Ore Company, respectively, the credit for successfully applying it and working out many of the early problems it presented. This method has since been used extensively by the writer in stripping the Hillcrest mine, and to an important degree in the development of the Sagamore and Maroco pits.

Since stripping was started at the Pennington mine in 1912, eight open pits have been developed, as follows: Pennington-Armour No. 1, Rowe, Thompson, Hillcrest, Mahnomen, State Pit-Portsmouth, Maroco, and Sagamore. From these have been shipped seven million tons of ore or almost half of the Range's production.

Beneficiation of ores has been tried. The silicious iron ores of the Thompson and Rowe mines were washed in the standard Mesaba Range washing plant but without success. In the last two years, however, it has been demonstrated that the ores of the Maroco mine yields to concentrating with much the same results as the better wash ores of the western Mesaba. At the present time also some of the manganiferous ores of the Mahnomen mine are being successfully washed, although starting with a very low silica ore, the process is designed to eliminate some clay and the moisture-holding fine ore. Its object is the lowering of moisture in the ore.

The ores of the Omaha mine were dried in the later years of its operation. At the present time the drying of the high moisture manganiferous ore of the Sagamore mine is being carried on in what is probably the largest and most complete ore drying plant in the Lake Superior District.

A paper is being prepared for this Institute on the manganiferous ores of the Range. I have no intention of encroaching on that subject, but no historical notes on this district would be complete without some mention of these ores which had a large part in its development.

The presence of manganiferous iron ores was early known to the Cuyuna Range explorers and it was assiduously avoided by all who had any acquaintance with the desires of the blast furnace operators. But the Cuyuna Range was explored by many men who did not know in what bad odor manganese in iron ore was held by the consumer of ore. Many of the explorations conducted between 1910 and 1915 were financed by the proceeds of the sale of stock to small speculators and investors who had little idea of the value of any kind of ore. It was mainly by these stock companies that many deposits of manganiferous ore were explored extensively and several shaft developments were made at a time when the presence of manganese in iron ore was something to be apologized for and generally avoided.

The men who explored and developed these deposits of manganiferous iron ore were driven by the same unquenchable optimism and blind faith that forced the development of the now famous ore deposits of the Mesaba Range, at a time when the almost universal

opinion of consumers was that the Mesaba Range ores could not be economically converted into pig iron.

During the World War the small shaft properties made a worth while contribution to the needs of the steel makers by mining and shipping tonnages of manganiferous ere at a time when the dislocation of ocean shipping prevented the smelters from letting their usual supplies of foreign ore.

The greatest contribution of manganiferous ore from the Cuyuna Range was made by the Mahnomen mine. This property stripped by C. K. Quinn and associates as an iron ore deposit in 1915, was known to have a large tonnage of manganiferous iron ore to which the pit was rapidly extended when the demand for these ores appeared in 1916. This mine was able to produce three-quarters of a million tons of manganiferous ore in the war years of 1916, 1917 and 1918. In 1918, but after the use of manganiferous iron ore had become established, the Portsmouth and Sagamore open pits were developed and these with the Mahnomen have supplied the greater part of the post-war demand for this kind of ore.

No less than sixteen of these underground manganiferous iron ore mines were developed by the sinking of shafts, before and during the war. Only the Milford of the Whitmarsh Mining Company is producing this class of ore by underground methods today.* The future of some of the smaller of these mines is in doubt but those having the larger ore bodies will undoubtedly be operated again in the not distant future.

The future growth of the Cuyuna Range depends in some measure on the continued expansion of the use of these manganiferous ores, on the use of the higher phosphorus ores of the South Range and on the encouragement given to the exploration of large acreages of unexplored or insufficiently explored territory. The mines now operating have sufficient tonnages developed to last many years. The explored but at present undeveloped ore bodies will further extend the life of the district. The unexplored or insufficiently explored areas are greater than those that have been thoroughly tested and with the proper encouragement (or rather in the absence of especial discouragements), the future history should eclipse the past in the matter of tonnages developed.

*NOTE—The Inland Steel Company mines a considerable quantity of manganiferous iron ore from its Armour No. 2 Mine, but this mine is essentially a producer of non-bessemer iron ore.

NOTE—In the preparation of this paper, the writer is indebted to information on the early years of the Range furnished by R. C. Jamieson, Carl Zapffe, C. C. Adams and B. Magoffin.

DEVELOPMENT OF THE USE OF CUYUNA RANGE MANGANIFEROUS IRON ORES.

BY L. E. IVES, CLEVELAND, OHIO.*

As the subject of this paper is restricted to the development of the use of the manganiferous ores of the Cuyuna Range, it will not be necessary to go into the history of the Cuyuna Range, particularly as most of the Institute members are more or less familiar with the development of the range. Shipments of iron ore from the Cuyuna Range were begun in 1911 from the Kennedy mine after several years of exploration and development.

It was not, however, until several years later that it was realized that the range contained not only so-called “straight iron ores” but also iron ores carrying varying percentages of manganese.

Manganese in iron ores was not new for the Lake Superior range, as several grades of such ores had been shipped for some years from the Gogebic and Menominee Ranges in Michigan, and in a few instances with considerably less manganese from certain properties on the Mesaba Range in Minnesota. The character and the quantity of the manganese ores present on the Cuyuna, however, seemed to indicate a new condition in regard to both the production and the sale of such ores.

The first shipment of manganiferous ore from the Cuyuna Range was made from the Cuyuna Mille Lacs mine of the American Manganese Manufacturing Company in 1913, and amounted to 25,000 tons. This was followed by 51,000 tons from the same property in 1914, in which year the Iroquois Iron Company also shipped about 2,000 tons of a 10 per cent manganese ore which had been stockpiled during the previous winter at its Armour No. 2 mine later operated by the Inland Steel Company. In the same year, also, the Iron Mountain Mining Company shipped about 600 tons for experimental purposes. Up to the year 1915 the manganiferous ores from these properties were shipped to a number of furnaces including the Standard Iron Company in Ontario, Illinois Steel Company at Chicago, the Dunbar Furnace, Bethlehem Steel Company, Pittsburgh Steel Company, Cambria Steel Company in Pennsylvania and also some of the charcoal furnaces in Northern Michigan and Wisconsin.

*Sales Representative, Clement K. Quinn & Co.

The bulk of these ores, however, was low in phosphorus and high in silica, thus constituting one of the two so-called groups of manganiferous ores which were developed on the range. The second group, developed later, carries considerably lower silica and somewhat higher phosphorus, and it is this class of ore which has been more extensively developed and which appears to be in greater abundance on the Cuyuna Range. The ores of this group win range from 3 to 20 per cent in

manganese and will not exceed or 8 per cent in silica, with a natural combined metallic content ranging from 43 to 48 per cent in the raw ore. These figures, as well as the moisture content vary considerably in different properties, but the figures given above give a good indicator of the range.

During the period of the World War the requirements of the steel industry in this country, and the restrictions of imports were such that these low-phosphorus high-manganese ores found an extensive use in the making of spiegeleisen, which is an alloy of iron and manganese with a low percentage of manganese as compared to that in ferromanganese. The restrictions of the war also caused the United States Government to reduce the specifications of manganese in spiegel with the result that the Cuyuna ores of this class were better adapted for this purpose and this of course materially stimulated the production of these ores, as it afforded a much wider and more certain market for them. Considerable tonnages of this class of manganiferous ores from the Cuyuna Range were mined and disposed of during the war period, but with the signing of the Armistice this business practically dropped off over night and has never been regained in any appreciable amount. It is true that since then some tonnage of ore has been disposed of for this purpose but the production has been very small and intermittent, and it has mostly resulted in disposing' of the stockpiles of such ore which had accumulated during the last year of the war.

With the inauguration of the present high tariff on manganese ore and ferromanganese it had been expected by many in the Lake Superior region, that the production of such ores would be stimulated and placed on a satisfactory basis. However, this tariff has been in effect for a year or more and to date there have been no developments to indicate that such is going to be the result.

The use of manganiferous ores in the blast furnace to increase the manganese content of basic pig iron dates back a good many years, but prior to the development of such ores on the Cuyuna Range the furnace companies had to depend upon such tonnages as were available from the Gogebic and Menominee Ranges in Michigan. The reserves of such ores were not in proportion to the reserves of the ordinary iron ores in the Lake Superior region; and while the furnace companies recognized the advantage to he gained by maintaining a high manganese content in the blast furnace burden, they were never certain of the future supply.

Another factor which has undoubtedly had a bearing in this matter is that such ores from the other ranges were produced mostly in underground operations with consequent limited production and higher costs as compared to open pit operations.

The Cuyuna ores of the class under consideration are lower in phosphorus than some of the other manganiferous ores produced on the older ranges in Michigan, and as the Cuyuna ores are also very much lower in sulphur than the older range ores they are more attractive to the furnace man.

The problem that seemed to develop, therefore, in regard to the sale of Cuyuna Range ores suitable for use in a basic furnace mixture was one of assuring the furnace man first of an adequate future supply of these ores, secondly, their equal or greater desirability as compared to the old range ores, and further to extend by means of education the use of such ores to furnaces that had not heretofore employed them.

This effort has been quite successful judging from the record of shipments of manganiferous ores from the Cuyuna Range from the year 1916 to 1922. In 1916 the shipments of such ores amounted to 427,370 tons and in 1917 365,222 tons; whereas the shipments in 1920 were 604,706 tons and in 1922 656,105 tons. The indications for the current season are that the shipment of manganiferous ores from the Cuyuna Range will amount at least to the 1922 figures if it does not considerably exceed them. The average manganese in these shipments ranges from a low of 6.99 to 12.21 per cent with an average probably, of about 9.00 per cent. The phosphorus will average close to .22 and the silica ranges from a low of 5.59 to a high of 11.10, with an average of about 7.00 or 8.00 per cent.

There is evidence of the steadily increasing use of manganiferous iron ores in blast furnace practice, at both steel works and merchant furnaces making foundry and other grades of iron. This has been brought about through the wider appreciation of the advantages to be gained by the use of such ores.

Some steel works furnaces have for many years made it their standard practice to use mixtures containing more than an ordinary amount of manganese. Among these the demand is steady and in general for an ore containing from 5 to 10 per cent manganese. It has been demonstrated through actual practice and experiments conducted for the purpose, that there are numerous advantages in this and it is now generally accepted that manganiferous ore in the blast furnace has a beneficial effect upon the general operation of the furnace. It is more recently, however, that the use of a high-manganese pig iron has been demonstrated to be of advantage in the open-hearth furnace.

These late developments have a direct bearing upon the increasing use of manganiferous ores. While some works prefer to use a large tonnage of ore running comparatively low in manganese, say about 5 per cent, others for various reasons find it of advantage to use a small tonnage of an ore running much higher in manganese. There is no question, however, but that present practice involves the use of a mixture carrying a much higher percentage of manganese than would have been used ten years ago. At that time it was only in exceptional cases that an ore containing over 1 per cent manganese was used, while today with most of the important plants in the country carrying over 1½ per cent manganese in their metal, it has become necessary to

include in the burden an ore containing at least 5 per cent manganese.

There are a number of definite and valuable facts known concerning the effect of manganese in both the blast and open-hearth furnaces.

(1) A high manganese charge is a help rather than a hindrance in blast furnace practice.

(2) High-manganese iron improves the quality of open-hearth steel without reduction of tonnage or other injurious effects.

(3) High-managanese iron is of very great assistance in meeting the demands for the better grades of steels.

(4) Due to better surface conditions steel made from high manganese iron shows increased yields with ordinary rolling mill practice.

(5) Open-hearth production is materially increased by keeping manganese in the proper amount in the basic iron.

(6) Maintaining manganese between certain limits in the iron saves the adding of appreciable quantities of ferromanganese in the ladle.

Increasingly high sulphur fuels are making it more difficult for steel manufacturers to meet sulphur requirements and specifications without additional cost. Manganese is the answer. The efficient way to add the manganese is through manganiferous ore in the blast furnace burden.

If manganese in the hot metal is maintained at about 2.00 per cent it is possible to run the blast furnace with higher sulphur, leaner slags, increased tonnage and reduced fuel ratio and to deliver to the open-hearth, iron as low in sulphur as could be obtained with a low manganese ore charge much lower in sulphur.

The use of manganiferous ore will secure leaner slags and maintain tonnage. With sulphur up to 0.10 per cent at the furnace it is still possible to deliver iron to the open-hearth through the mixer with 50 per cent of the sulphur eliminated.

The time of open-hearth heats can be materially reduced by using high-manganese iron. Slag can be worked into shape more quickly in this way than with low-manganese iron.

In manufacturing ordinary steel under normal conditions, between 1 and 2 per cent manganese in the iron gives residual manganese in the bath and also saves adding manganese in the ladle at the rate of about .7 pounds of pure manganese for each 25 points of manganese in the iron over 1 and up to 2 per cent.

Manganese above 1 and up to 2 per cent in the basic iron will increase open-hearth production 1 per cent for each 25 points of manganese in the iron. This is because basic iron with relatively high manganese, is more refined when delivered to the open-hearth, and also because the influence of the manganese on the sulphur reduces delay in finishing the open-hearth heat.

Experiments and experience have demonstrated, if anything, that high-manganese iron is less detrimental to open-hearth furnace bottoms than low-manganese iron. The same is true of ladle linings.

Oxygen red-shortness cannot be off-set by carbon, phosphorus or silicon. Manganese will reduce it and is the best preventative agent. This is best accomplished through high-manganese iron and this can best be made by manganiferous ore in the blast furnace.

With a higher manganese content in the furnace mixture, the cost of production is reduced, tonnage increased, and a smaller amount of flue dust is made, on account of a smoother working furnace due to a more acid slag.

Can one assume that thorough deoxidation results from adding a little deoxidizer to a ladle of steel low in manganese and covered with basic slag containing oxides—and pouring almost immediately?

As the production and use of such ores has increased it has become more and more apparent that the blast furnace man is as much interested in the regularity of the ore, its uniform structure and distribution of the manganese throughout the ore as he is in the total amount of the iron and manganese contained. It has therefore been necessary, as these ores find wider use, to give the blast furnace superintendent more nearly what he wants. Today the furnace superintendent has a number of well-established grades from which he can make any selection in manganese that he desires, and in doing so can be assured of receiving ore that is of excellent structure as well as being uniform in analysis. These grades are established and recognized and fortunately for the operator as well as for the furnace man the Cuyuna manganiferous ores in their natural state have a splendid structure and this no doubt has helped materially in advancing their use and sale in a market that was not any too favorably inclined when such ores first appeared, and which required the overcoming of considerable opposition and much educating on the part of the producer to convince the furnace man and the steel works man that the ores were available in sufficient tonnages for a future period of years to warrant their adoption as standard practice. The Cuyuna manganiferous ores have now come into their own so far as a market is concerned for the grades suitable for use in making basic pig iron. There is every reason to believe that their use will continue to grow in proportion to the growth of the iron and steel industry in this country and will probably only be limited by the availability of such ore in the future.

THE CEMENT INDUSTRY IN DULUTH.

Description of the Universal Cement Company's plant prepared by RAY S. HUEY.
NOTE—It was planned to visit this plant but time would not permit.

Due to a number of reasons including education, more general information and common knowledge by the public, of the nature and uses of Portland cement as a durable, fireproof, reasonable priced, and easily adaptable building material, the consumption of Portland cement made in the United States has increased from an average of 9,000 barrels between 1872 and 1878 to 116,563,000 barrels in 1922.

HISTORY—In 1872 the first two Portland cement plants in the United States were established, one at Coplay, Pennsylvania and the other at South Bend, Indiana. Today there are about 115 operating plants with an annual capacity of approximately 140,000,000 barrels representing an investment of over $300,000,000, employing about 36,000 men with an annual payroll exceeding $61,000,000. The cement production in the United States

Between 1872 and 1878 was.....	9,000	barrels per year
In 1882 was.....	85,000	" " "
In 1892 was.....	547,000	" " "
In 1902 was.....	17,230,644	" " "
In 1912 was.....	82,438,096	" " "
In 1922 was.....	113,870,000	" " "

It can readily be seen that the consumption has been mounting by leaps and bounds.

RAW MATERIALS—The advantage of a variety and wide occurence of the raw materials available in many sections of the country makes it possible to locate plants near the centers of consumption to care for the needs of those centers. This is especially true since the era of high freight rates, as cement is a heavy commodity and its transportation for long distances becomes expensive. The trend of the industry therefore has been to build smaller plants at different locations near the centers of consumption taking care of certain areas, the limits of which are determined by the amount produced and the distance beyond which the price, which includes freight rates, render the business unprofitable. Portland cement contains silica, alumina, iron and lime in very definite proportions and to give a uniform product the raw materials must be uniform also. It can be produced from a number of ingredients such as cement rock (which is a rock found in nature with the necessary elements in almost the proper proportion) clay and limestone, shale and limestone, clay and marl, shale and marl, blast furnace slag and limestone, etc.

Blast furnace slag being a product produced by definite proportioning of certain material made necessary for the proper operation of the blast furnace is therefore very uniform in chemical analysis and was found to contain everything necessary for the manufacture of Portland cement and deficient only in the lime content and therefore when well mixed with more limestone and ground to the proper fineness makes an ideal raw material.

Cement can be manufactured from the raw material by either the wet process, in which the raw materials are ground, mixed and prepared for burning in a slurry containing from 30 to 60 per cent water or by the dry process in which the raw materials are first dried, then ground, mixed and prepared for burning in a dry state.

A short description of the Duluth plant of the Universal Portland Cement Company using blast furnace slag as a raw material by the dry process will be given. All the plants of the Universal Portland Cement Company operate on these principles and utilize slag from the blast furnace of the corporation in whatever district they are located.

In line with the general trend of the industry to install plants convenient to raw material and near the centers of consumption, the Universal Portland Cement Company, a subsidiary of the United States Steel Corporation, decided it would be desirable to have a plant in the northwest to supply the needs of that territory in upper Wisconsin, Minnesota, North and South Dakota then supplied by its mills at Buffington, Indiana.

Accordingly when the corporation decided to build a steel plant at Duluth whence slag of the proper composition would be available for use for cement manufacture, the corporation decided to install a modern cement plant at Duluth adjacent to and to operate in conjunction with the Minnesota Steel Company thereby to meet the rapidly increasing demand for cement in the northwest coupled with the necessity of economically disposing of the slag.

The construction work was started and the plant put into operation in February 1916 shortly after the Minnesota Steel Company began producing iron.

At the Duluth plant of the Universal Portland Cement Company the slag is obtained from the two furnaces of the Minnesota Steel Company where it is granulated as it comes from the furnace by the molten slag coming in contact with a high pressure stream of water as it falls from the slag runner into the pit. This breaks up the slag into small porous particles about the size of torpedo sand and although the slag when cooled slowly is black this granulated slag is a yellow color and very light in weight and contains from 20 to 30 per cent of water when received at the cement plant. It is loaded from the slag pit at the furnace by ordinary overhead traveling cranes equipped with perforated clam shell buckets into large hopper bottom, standard gauge railway cars and hauled to the cement plant a quarter mile away. Some water drains out of the cars but a large quantity still remains which is quite troublesome in winter on account of rapid freezing in cars making unloading difficult and causing icy tracks for switchmen.

As no limestone suitable for cement manufacture is found in Minnesota, the limestone is obtained as a pure

calcite washed screening from the quarry at Calcite, Michigan, from which it is shipped by boat to Duluth in sufficient quantities during the summer to provide for the entire year.

RAW MATERIAL MILL—The cars containing granulated slag and limestone are switched onto a trestle where they are dumped into separate bins for use in the raw material mill.

Both the slag and limestone are dried in rotary dryers, the heat being produced by burners using pulverized coal as fuel.

The dried slag is elevated into hoppers and fed into ball mills and ground to a six mesh product then elevated to a hopper above the automatic electric scales.

The limestone is elevated into hoppers and fed into Williams' mills where it is preliminarily ground and then elevated into a bin over the scales. Samples are automatically collected as the material goes through the conveyors and analyzed by the chemist who sets the scales to get the proper mixture with the materials at hand. A separate scale hopper is provided for each material which fills to the proper weight but does not discharge till both are filled when they both are automatically discharged and mixed together in a screw conveyor below the scale.

The mixed material is then elevated to hoppers over the tube mills and fed into 7 ft. by 22 ft. tube mills which finishes grinding the raw material after which it is conveyed to a storage bin or hoppers over the kilns. The storage bin is filled up during the week and this stock is used on Sunday making it unnecessary to run the raw material mill on Sunday.

BURNER BUILDING—The raw material is fed from the hoppers into four kilns 10 ft. in diameter by 150 ft. long and one kiln 10 ft. in diameter by 200 ft. long. These kilns are revolving steel shells lined with first quality fire brick 9 in. thick. The kilns are mounted on rollers and set on an incline so the feed starting at the upper end is gradually moved by gravity to the lower end and discharged as clinker which are balls averaging about the size of a walnut. The heat is produced by pulverized coal, fed into a pipe with a blast of air and which burns like a gas flame when ignited. As the raw material after coming into the kiln at the upper end comes in contact with the heat the CO_2 in the limestone is driven off and as it works down lower it gets into the burning zone where a temperature of from 2,500 to 3,000 deg. F. makes the chemicals react to form hard, dense, vitified balls called cement clinker.

There is considerable difference of opinion among cement chemists as to just what reactions take place during the burning process but the fact remains that practical experience has shown that unless the raw material has been burned at a high temperature for a considerable time the clinker will not produce a strong sound cement.

The clinker is discharged onto a clinker pile where it is wet to steam and season, and handled on the pile and to the finishing mill by overhead traveling cranes with clam shell buckets.

In order to be assured of uniformity of the raw material continuous samples are automatically taken of the raw material and tested for fineness and the chemical analysis checked with the clinker analysis.

An interesting feature of the plant is the Cottrell dust collectors which collect the dust created by the draft through the kilns picking up the fine particles of raw material and carrying them out through the stacks. Without these treaters a large quantity of raw material is carried out but by the use of these treaters the loss is tremendously reduced. These treaters consist of groups of 12 in. pipes through which the dust laden gases travel to the stacks. In the center of each pipe is hung a wire charged with a 75,000 volt rectified current which charges the particles of dust like a rubbed rubber comb does a piece of paper making the dust collect in the pipe from which it is periodically shaken down and returned to the kilns thus saving the raw material which would otherwise be lost and eliminating, a nuisance to the community.

COAL HOUSE—The coal which is a high volatile bituminous coal used for drying and burning is unloaded on the trestle and dried in the same manner as the raw material and ground in Raymond mills after which it is conveyed in screw conveyors to coal hoppers over the dryer and kiln coal feeds. Coal in this condition must not be stored long but must be used soon as it will ignite spontaneously very quickly. The coal house and mills must be kept clean to prevent large quantities of dust becoming mixed with air because if mixed in proportions between certain limits it becomes very explosive and a spark or flame will set it off with very disastrous results.

FINISHING MILL—After seasoning for a time, which is not essential as far as quality is concerned and only for convenience, the clinker is elevated by the cranes to the finishing mill hoppers from which it is fed along with the proper amount of gypsum rock to crushers and pulverizers and then to tube mills identical with those

in the raw material mill in which it is ground to the finished size, which, to conform to standard specifications, at least 78 per cent must pass a 200 mesh screen or one having 40,000 openings per square inch. Samples are automatically taken and physical and chemical tests made periodically.

STOCKHOUSE—It is conveyed from the finishing- mill to the stock-house by belt conveyors to circular bins and stored in bulk until packed for shipment. Cement is shipped in cloth sacks, paper bags or in bulk.

Packing is done by first drawing the cement through holes in the bottom of each bin and conveying it to packing machines where it is fed into sacks through a tube extending through a valve in the sack and filled to the proper weight, the sacks being suspended on a

scale which cuts off the supply automatically when the predetermined weight is reached.

The sacks are discharged from the packing machines onto a belt and conveyed to the car door and slid off onto trucks holding seven sacks which are run into the car and dumped in neat vertical rows without the trucker having to lift a sack. Under normal conditions the Duluth plant is favorably situated for a good car supply as the cars come to the head of the lakes with grain and flour for transfer to water shipments and can go back west again loaded with cement. The fact that there are seven lines into Duluth gives the mill better transportation facilities than if located at some unimportant point on one or two lines. This advantage has a very vital effect on the service rendered the customer.

SACKS—When cement is shipped in cloth sacks the sacks are charged out to the customer and are credited back at the same price when returned in good enough condition to be used again. When they are returned by the customer to the plant they are checked in, cleaned, sorted, repaired and tied and either shipped out again or stored depending on the requirements.

QUALITY—The quality is carefully watched by continuous sampling and testing by the physical and chemical laboratories and I might say here that all companies holding membership in the Portland Cement Association do so only so long as they manufacture a cement which conforms to standard specifications.

CAPACITY—The plant manufactures about 28,000 sacks of cement daily using individual electrically driven machinery with power purchased from the Great Northern Power Company generated at the hydro-electric station near Thomson on the St. Louis River, transmitted at 33,000 volt, 25 cycle, 3 phase, alternating current and used in the mill at 2,200 or 220 volts.

The fact that the plant runs continuously throughout the year gives constant employment to many men and on account of the general policy of the United States Steel Corporation to treat the men fairly and furnish good working conditions, it is generally well supplied with a good quality of labor, many of whom have been employed ever since the plant started.

The question is frequently asked whether the dust is not deleterious to the health of the employes. As a matter of fact it is not particularly dusty in the mills, great effort being taken to keep the machinery in good condition to prevent dust leakage and to reduce it to the minimum. The fact remains, however, that the dust which is encountered is not detrimental to the health such as emery or granite dust, and exhaustive reports of doctors who have made a study of the records of cases from cement and lime plants show that the dust which is high in lime actually inhibits pulmonary infection and in some cases they have even recommended patients having tuberculosis to secure employment in lime or cement plants.

GUNITING IN THE ATHENS MINE SHAFT.

AT NEGAUNEE, MICHIGAN.

BY C. W. NICOLSON, ISHPEMING, MICH.*

The use of gunite in a mine shaft, whether for fire-proofing or for smooth-lining to improve the flow of air, is not new and consequently the operation to he described can claim but little originality. However, as the purpose for which this work was done was somewhat unusual, and as the shaft is comparatively wet, it is believed that an account of this work may prove to be of interest and even of some value.

The No. 1 shaft of the Athens mine, located at Negaunee, Michigan, and operated by the Cleveland-Cliffs Iron Company, is 2,490 ft. deep. For the first 1,082 ft. the shaft is circular, 17 ft. in diameter, from which point it is continued in rectangular cross-section, the inside dimensions being 11' 2½" x 14' 11¾". This shaft is of steel and concrete construction throughout, all sets being made of steel I-beams and the space between the steel sets and the rock wall being filled with concrete. As shown by Fig. 1, there are four compartments to the shaft; two for the skips, which operate in balance, one for the cage and one for the pipes, ladders and electric cables. The only inflammable material in this shaft is the partition between the cage and the skip compartments, which is of 2" plank, the cage and ladder compartments being separated by heavy triangular mesh wire netting.

*Mining Engineer, The Cleveland-Cliffs Iron Co.

In this mine the same shaft is used for both up-cast and downcast air, the air being circulated by a No. 11 Sturtevant Multivane blower, located on the bottom level, which exhaust air from the cage compartment, forcing it in and up through the workings, which are cut off from the shaft on each level by two pneumatically-operated doors, and back to the shaft on the top level, where it is discharged into the skip compartment and thence to surface. The fan handles about 40,000 cubic feet of air per minute, against a total resistance for mine and shaft of a little over 4" of water. This fan was installed at a comparatively recent date, and after it was put in operation it was found that the wooden partition between the up-cast and down-cast compartments was not air tight, and that the up-cast air, instead of going to surface, leaked into the down-cast compartment, with the result that this down-cast air was contaminated. An attempt was made to stop this leak by nailing wooden strips over the cracks between the planks of the partition, but this attempt was unsuccessful, as over so large an area the cumulative effect of even the smallest cracks produced too great a leakage. It was realized that a complete coating of some material must be placed over this planking, which would not only render it air tight but would remove the fire hazard of this inflammable material, which hazard, however, is comparatively slight, as the planks are practically saturated with water. Due to the large amount of water falling in the shaft—an

amount which is equivalent to a fairly heavy rainstorm—it was feared that the application of gunite would be unsuccessful and that instead a sheathing of rust-resisting metal would have to be used. As it would be extremely difficult to obtain air-tight joints with this metal, it was decided, on the recommendation of Messrs. Daniel Harrington and W. H. Carrick, of the United States Bureau of Mines, who had been consulted by Mr. G. R. Jackson, superintendent of the Athens mine, to experiment first with gunite, which, according to Mr. Harrington, had been used successfully in wet shafts in the Butte district.

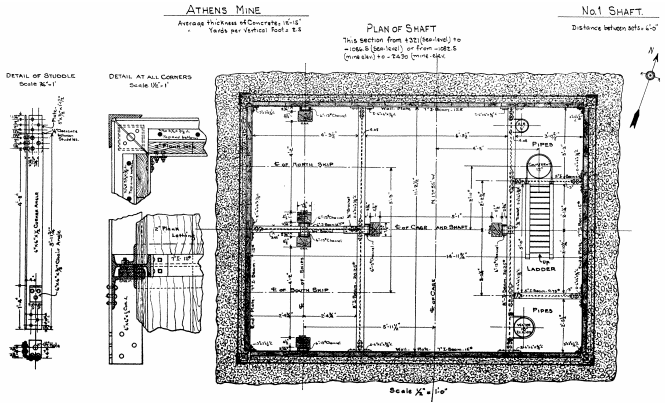

FIGURE 1

By nailing strips of 28 gauge metal across the partition at 50' intervals and bending them in such a manner that the strip projected some 4" from the wall (these strips can be seen in the upper right hand corner of Fig. 3) it was found that any water running down the plank could be diverted out into the shaft and that the gunite could then be applied with but little danger of washing out before setting. The use of gunite was then decided upon and the work was started about the middle of June.

As in the rectangular portion of the shaft there is but 3" clearance between the cage and the walls, it was decided to start the work at the top of the rectangular shaft and work downward, that the men might become fully accustomed to the job before working in the circular portion, where the clearance is almost 3'. When the work in the round shaft did begin, hinged extensions were attached to the bonnet of the cage, which could be folded back to permit the cage to pass through the rectangular shaft but which, when extended in the circular shaft, allowed only 3" clearance.

The cement gun used is of the type N-1, manufactured by the Cement Gun Company, to which was attached 15' of material hose with a 1" nozzle. As shown in Fig. 2, the gun was placed upon the floor of the cage and the material hose passed by the edge of the cage to the top of the bonnet. Two men standing on the bonnet and protected by a shield fastened to a hoisting rope operated the nozzle. Two men worked on the floor of the cage, one controlling the cement gun and one feeding into it the mixture of sand and cement, a supply of which was carried in bags on the floor of the cage. All men were provided with rubber gloves, safety goggles and respirators as well as a double set of oilskin clothing, is the shaft is so wet that a single set is not sufficient protection. To obtain compressed air the main 6" line in the shaft was tapped at 100' intervals from which tap a 50' hose was connected to the gun. Air was supplied at 100 lbs. pressure which was throttled down to give a nozzle pressure of about 6 lbs. To obtain clear water it was found necessary to pipe it from surface, as the mine water contains too many impurities. From surface to the bottom of the round shaft a 3" pipe, which had been used for the discharge of a small pump, was utilized, a pop valve set for 60 lbs. pressure being placed at the bottom and the water carried below this through a 1" pipe, which was extended as the work progressed downward. At the bottom of this 1" pipe there was another pop valve also set at 60 lbs. and from this a rubber hose 50' long led to the nozzle of the gun. Water was admitted to the 3" pipe at surface at a rate slightly greater than was needed for the cement gun, the excess water being wasted through the pop valve. To obtain water while guniting in the circular shaft a 1" line was carried down from surface as the work progressed. With these connections 100' of shaft could be gunited without changing the hose, the water pressure varying from 40 to 80 lbs.

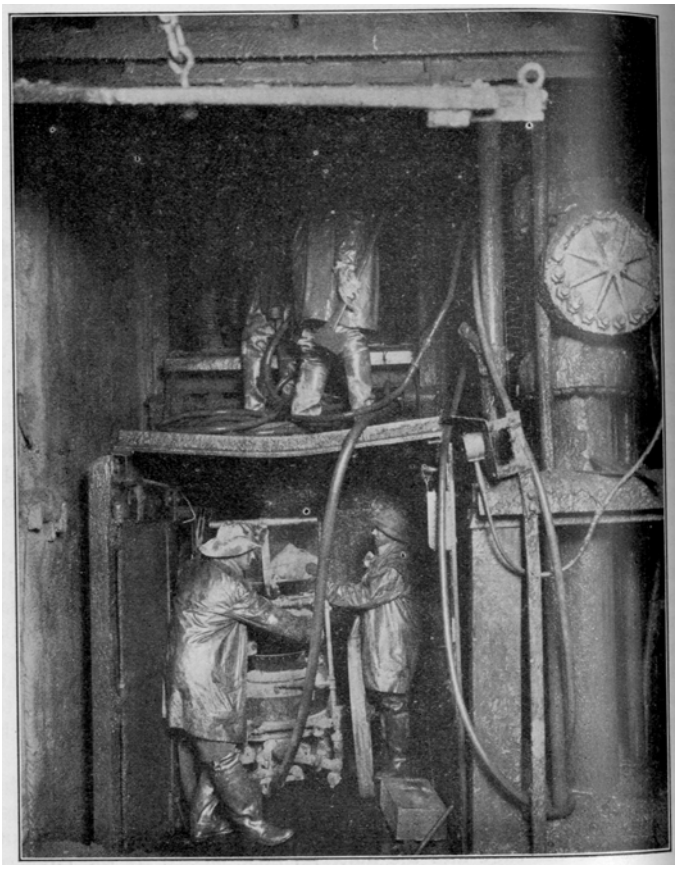

FIGURE 2

In order to reinforce the gunite and prevent any possibility of slabbing, it was decided to use expanded metal lath cut from galvanized sheets to retard any corrosive action of the water.

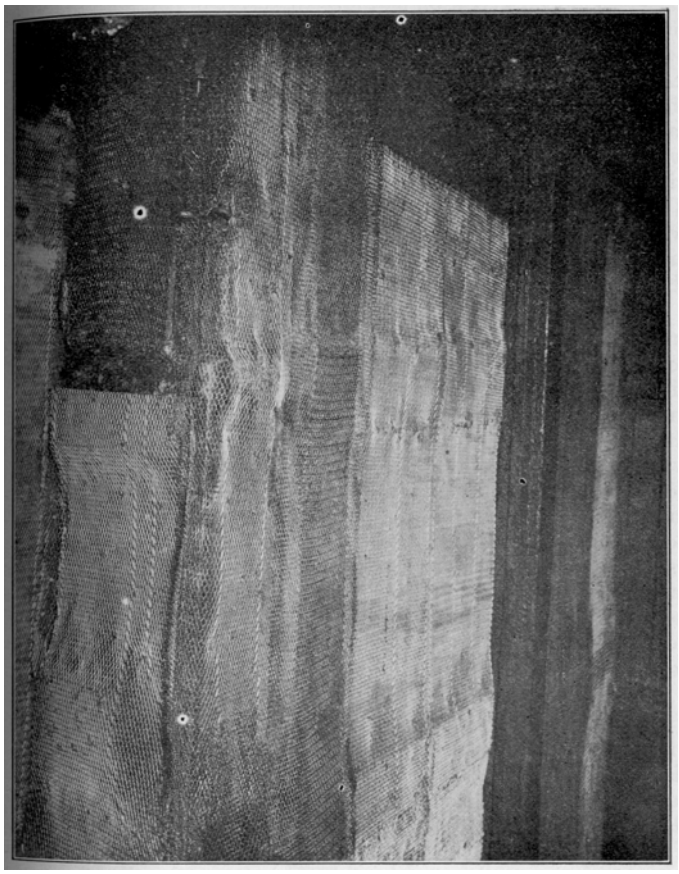

FIGURE 3

Fig. 3 shows this lath in place at one of the level plats, extending across the partition and around the corner of the skip compartment. The large headed zinc nails used to fasten the lath can also be seen. Lath was chosen in preference to chicken wire as it was easier to put into position and the flat sheets preventing any wrinkling. The material used was 24 gauge diamond mesh metal lath ½"x⅞" weighing 3 lbs. per square yard and delivered in sheets 24"x96". While it was realized that 24 gauge was possibly heavier than was really necessary, material of this weight could be obtained from stock shipments while it would have been necessary to wait for lighter material. The lath is held against the planks by zinc nails 1½" long with ½" heads, placed not over 12" apart. Though the mine water is not, so far as is known, corrosive, it was deemed best to use only zinc nails, so that, even though the lath should eventually rust out these large headed nails would hold the gunite and prevent any large slabs from breaking away.

The coarse sand used was obtained from a bank about 1,500' from the shaft. It was screened through a 3/16" mesh, placed in cement bags and delivered to the mixing house, which was located about 50' from the shaft. There it was thoroughly mixed with cement in the proportion of three bags of sand to one of cement, and then placed in bags and delivered to the collar of shaft. This work of mixing was done on the day shift while the guniting was done during the night, the shaft being used for hoisting only during the day. In this way the mixed material did not stand over 12 hours before being used.

In case some bags of mixture were not used that night, they were rescreened on the following day to remove any lumps which might have formed. It was found that two men in the sand pit could screen and bag about 125 cubic feet per shift, which was as much as two men in the mixing house could mix and bag.

The operation of the cement gun crew was as follows:

Work was started at 6:00 p. m., the cement gun and 60 bags of mixture being placed on the floor of the cage and the shield clamped to the hoisting cable. The cage was then lowered to the bottom of the water pipe and sufficient extra pipe installed and clamped to the sets to cover the distance to be gunited that night. The metal strips to deflect the water from the plank were then put into position, usually at 50' intervals but occasionally closer than this, as at some places eddies in the air currents seemed to force more than the average amount of water against the boards. Water and air hose connections were then made and work started at the point where it had been left off the night before, and carried downward. About three linear feet of shaft were coated to a thickness of ¼", the cage was then lowered 3' and the work thus continued to a depth of 65' or 70'. By this time is was necessary to send the cage to surface for more bag, which was usually so timed as to coincide with the lunch hour. After lunch a second coat, also ¼" thick, was put on the area which had previously been done, thus giving a finished thickness of ½". Near the bottom of the shaft, in parts which were especially wet, it was found that small sections of the gunite tended to wash out before setting. In such places a richer mixture, about 2½ to 1, was used, which usually overcame the difficulty. In some few places it was necessary to go over parts pf the work on the following night.

As the plank partition had been in place for some time and had become coated with a thin covering of iron ore, it was necessary, before placing the metal lath, to clean down this plank, which was done with compressed air jets and steel brushes. The metal lath was placed directly against the planks and at the edges of the partition was bent and fastened to the wall plate for a distance of about 9", thus insuring a tight joint in the corners.

At the various levels this gunite coat was carried around all that part of the skip compartment which was exposed, thus preventing any possible leakage of air from this up-cast compartment.

Fig. 4 shows the finished gunite coat at one of the lower levels, extending across the partition and around the corner of the skin compartment. In the back ground can be seen the old casing plank of the wall plate which was used as a form when the concrete wall was poured. This has been removed near the partition to permit of a bond between the gunite and the concrete wall. Eventually all this plank will be removed, leaving only steel and concrete. In the photograph these planks appear to be coated with gunite, which is in reality, a film

of iron ore, the innumerable white spots being drops of water.

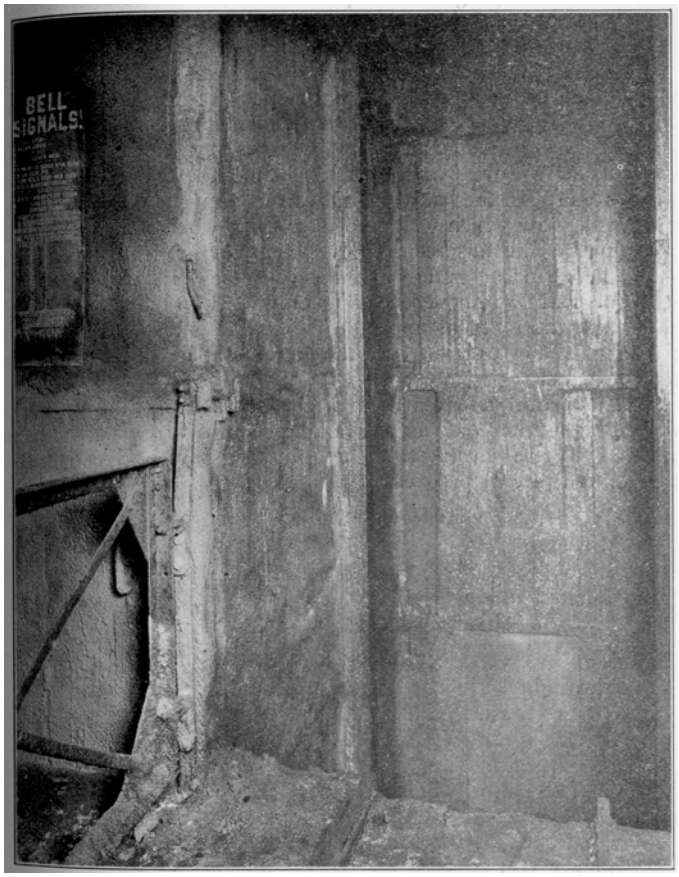

FIGURE 4

While certain irregularities in the surface of the gunite coat can be found, the coat, as a whole, is comparatively smooth and quite uniform in thickness. The following tables give details of material and rate of progress:

ANALYSES OF SAND.

Moisture	3.0%
Silica (SiO_2) free and combined	77.6%
Calcium oxide (CaO)	1.3%
Alumina (Al_2O_3)	9.0%

SIZE TEST OF SAND.

Through 3/16″	100%
On 10 mesh	14.5
On 20 mesh	11.3
On 40 mesh	17.7
On 100 mesh	50.0
Through 100 mesh	6.4
Total area of partition	35,820 sq. feet
Square feet covered per bag of mixture	8.23
Square feet covered per bag of sand	11.25
Square feet covered per bag of cement	30.6

	Per 8-hour Shift.	Per Man per Shift.
Average square feet of partition cleaned	3,582	895.5
Average square feet of partition reinforced	1,628	407
Average square feet of partition gunited	1,038	259.5

Average mixture used—1 to 2¾.

MESABI IRON COMPANY'S REDUCTION PLANT.

BY W. G. SWART, BABBITT, MINN.*

In 1869, Peter Mitchell and L. Willard, of Ontonagon, Michigan, organized a pool to explore for iron ore in Northern Minnesota, from which region rumors of vast deposits had been coming for several years. In this pool were Peter Mitchell, L. Willard, James Mercer, L. M. Dickens, L. J. Longpre, L. Stannard and Alexander Ramsey, ex-governor of Minnesota.

In the spring of 1870, Peter Mitchell came to Beaver Bay, making his headquarters with the Wieland family and working back in the country to the North and West. He seems to have brought to Duluth the first large samples of ore from the Vermilion Range, but was personally inclined to favor the Eastern end of the Mesabi Range, where he located large tracts of land and did some exploratory work. Based on this, the original Mesabi Iron Company was organized, and the facts were checked in 1875 by N. H. Winchell, State Geologist of Minnesota, and Prof. A. H. Chester of Hamilton, New York. They give the location and description of the first test pit sunk by Mr. Mitchell, which may still be seen. This is one of the very earliest authenticated discoveries of iron ore in Minnesota. But in 1876 Mr. Willard died suddenly and the activities of the pool came to an end. The lands on the East end of the Mesabi Range were later purchased by Mr. George A. St. Clair, of Duluth, and his associates, and now constitute the chief holdings of the present Mesabi Iron Company.

The Mesabi Range is a flat-lying, banded, sedimentary deposit of ferruginous chert to which has been given the name taconite. The Central and Western sections have been greatly altered, the iron now existing largely as hematite or limonite and being to a considerable degree concentrated into disconnected bodies of higher grade material. The taconite of the Eastern end was until the glacial period covered by a protective gabbro overflow or sheet, so that there has been little or no alteration or segregation, the iron occurring in the form of magnetite bands and lenses probably much as originally laid down. The geology has been worked out in detail by the United States Geological Survey and the Minnesota Geological Survey, each having published bulletins and maps.

*Vice President and General Manager, Mesabi Iron Company.

The taconite beds of the East end either have no cover, or at most a few feet of glacial drift. They dip gently toward the South and East; range from 50 ft. thick near the Northern edge to 500 ft. at the South where they disappear under the gabbro; are continuous except where cut by diabase sills or dikes; and each bed or horizon carries persistently a remarkably uniform iron content. The upper beds are those being worked at present, and show about 28 to 30 per cent iron as magnetite, the total iron averaging around 35 per cent. Only the magnetite is recovered.

About 16,000 acres are held in a solid block, approximately half lying on taconite. The tonnage of raw material existing on these lands is unknown although undoubtedly large. Enough drilling and other work has been done to assure an adequate supply for the present mill and its proposed enlargements, but anything more would have been a waste of money.

The history of most mining regions is much the same. The higher grade, lower cost ores are mined first. Increased production brings a lowering of grade, and then a raising of cost. Sooner or later beneficiation processes are introduced to make available the greater tonnages of material too low in grade for direct shipment, and eventually almost all material smelted will have first been mechanically concentrated in some way at or near the mine. Copper, lead and zinc are today largely produced from such material. Iron and steel seem sure to follow if we are to maintain for the United States the present supremacy in the production of those metals. That this is already the tendency is shown by the existence of some eighteen active washing plants on the Mesabi and Cuyuna Ranges, producing about 5,000,000 tons of washed ore yearly. It was formerly assumed that the great deposits of direct-shipping, merchantable iron ore in the Lake Superior region would last indefinitely, but the unprecedented expansion of the steel industry in recent years has made it plain that the almost inexhaustible bodies of lower grade material will have to be drawn on sooner than anticipated, and must constitute before many years the real foundation of the steel industry, at least so far as the Central part of the country is concerned. It is not to be believed that the Lake Superior region, with its enormous developed reserves of both high and low grade material, and the great superstructure of transportation and steel plants already in existence, built thereon, is going out of the iron ore business when the high grade deposits are exhausted. History will repeat itself, and unless the entire metallurgy of iron and steel should be revolutionized by some method still unknown, great concentrating plants will produce high grade iron ore, just as they already furnish by far the larger part of the copper, lead and zinc ores of the country. This will in all probability come about gradually in response to demand, and without disturbance to present operations.

The magnetic concentration of ores is very old, and except in the details of method the application to Lake Superior ores contains little that is really novel. What gives special interest to the Mesabi Iron Company plant at Babbit, Minnesota, is the fact that it is sponsored by the men who made the porphyry copper mines a success, and is based on the machinery, organization and operating method developed by Mr. D. C. Jackling, with the financial direction in the hands of Hayden, Stone & Company.

This preliminary statement of the basic and underlying reasons for the enterprise will perhaps serve to make clearer a description of the plant itself. It has always been the plan to start with as small a plant as could be built and still allow dependable costs to be ascertained; building the plant on the unit system, so that each part once constructed might remain permanently as part of a larger plant, and then increasing capacity gradually in accordance with demand.

The source of the raw material is treated as a quarry rather than as a mine, because the methods and problems are almost exclusively those of the quarryman. A little stripping is clone, using a small Erie shovel. Usually this amounts to not much more than cleaning off the top of the taconite, although there are pockets where 8 to 10 ft. of glacial drift must be removed.

The Eastern Mesabi taconite is a very hard rock, which must all be drilled and blasted, like a limestone or trap rock deposit. Cyclone churn drills are used, with Gill bits 6 to 7 in. in diameter. Holes are spaced 12 to 20 ft. apart, run from 20 to 40 ft. in depth, and are put down at the rate of 12 to 14 ft. per ten hour shift. The drills are operated by motors taking power from the central power plant at the mill. They require but one operator per drill, a helper being used for each 3 to 5 drills. All blacksmith work is done in a central shop near the quarry.

The holes are usually charged with 60 per cent dynamite, and are fired in groups of 4 to 12, although several large shots have been fired, one with as much as 30,000' lbs. of powder. While the taconite is hard, it fortunately carries many bedding and jointing planes, so that it shatters fairly well into steam shovel size, and about 5 to 6 tons should be broken per pound of powder—fair average quarry practice. The quarry is new and faces are not yet high enough nor long enough to give best results.

The broken rock is loaded by 90 to 100 ton steam shovels into 12-yd. side dump, standard gauge cars and transported about 3 miles to the mill. The ruling grade against the load is under 1 per cent. Seventy-six ton saddle tank 6-wheel connected locomotives are used, built by American Locomotive Company.

At the crusher the rock is dumped into a pit or pocket holding about 250 tons. An 8-ft. steel apron conveyor draws it from beneath the pit and feeds it into the coarse crushing plant. This plant is contained in a shaft 50 ft. square and 105 ft. deep, excavated in the solid granite. The rock falls by gravity through the crushers in series, and is taken out at the bottom of the pit through a tunnel on a 42-in. inclined rubber belt conveyor.

The first crusher is a Buchanan, 48 by 72 in., of cast-steel, weighing 340,000 lbs. It crushes the rock from steam -shovel size to about 11-in. pieces. These fall direct to the second crusher, a 36 by 54-in. Buchanan, mounted on steel girders, crossing the pit and embedded in the solid granite. Here it is crushed to about 4½ to 5 in. size. After passing a grizzly, the oversize drops into one of a group of four 20-in Superior gyratory crushers. These are of cast steel, special design, but approximately equivalent to a No. 9. They reduce the rock to about 2 or 2½ in. size.

All the motors in this plant are alike—150 h.p.—which necessitates the carrying of but one spare. This plant is also electrically interlocked, so that the belt, crushers and feeder can be started only in the proper order, although in case of accident the entire plant may be instantly stopped by push buttons located at each level.

All machinery lies under a 30-ton crane, so that hand maintenance labor is kept to the minimum. The plant is operated by two men, an operator and a helper, and has a capacity of 8,000 to 10,000 tons per day of 20 hours. It's only duty is to crush hard rock from steam shovel size to about 2-in. pieces.

These pieces are delivered by the 42-in. belt conveyor to a conical stockpile having about 10,000 tons storage capacity. Under this stockpile there are two inclined concrete tunnels, each with a 30-in. conveyor. The 2-in. rock is fed automatically to one or both of these belts, which carry it to the top of the screening tower. This tower is 100 ft. in height and contains electrically vibrated screens, magnetic separators of the drum type, known as graders and cobbers, and two sets of 78 by 20-in. spring-controlled rolls, the largest ever built. This system of screens, cobbers and rolls operates in closed circuit, which means that no piece of feed can escape until it is either low enough in iron content to be discarded as waste or has been reduced to six mesh in size and is ready to continue through the subsequent concentrating process.

Roughly, one-third of the weight of original feed is discarded in this section of the plant as a hard, clean, crushed stone, in sizes ranging from 2½ in. down to 6 mesh, suitable for concrete work, paving, ballast, road dressing, and all other purposes for which crushed stone is used.

All this is done automatically, but two men being required, one at the rolls, the other in the tower.

The six mesh, partial concentrate, assaying some 40 per cent iron as magnetite, and locally called "cob" goes into another conical stockpile holding around 100,000 tons. This large storage makes it possible to shut down the quarry, coarse crushing and roll plants for long periods, if necessary or desirable, without interfering with continuous operation of the remainder of the mill.

The "cob" is drawn uniformly as desired from the bottom of this stockpile by automatic feeders to a conveyor which delivers it the grinding and separating plant. Up to this point in the flow sheet all work has been done dry. The grinding and final separation are done wet. The cob passes first over one of a group of wet magnetic cobbers, which send to waste as a tailing about 20 per cent of the weight of the original feed. This tailing ranges in size from 6 mesh down to very fine material. The concentrate from these cobbers goes into another closed circuit, consisting of Hardinge ball mills, Dorr classifiers and Davis magnetic logwashers, the net result being a fine tailing to waste and a fine magnetite concentrate to be sintered. Recent developments show that by the use of concentrating tables, a very considerable tonnage of concentrate assaying 64 to 66 per cent iron can be secured without grinding, thus lowering the costs and increasing the capacity of this section of the plant—both desirable ends, of course. Clean concentrate can be made as coarse as 6 mesh, but 10 to 12 mesh gives a better grade and greatly increased tonnage.

This section of the plant also requires but two men, an operator and helper, and has a capacity of about 400 tons of concentrate daily.

The concentrate from the tables and logwashers goes into Dorr thickening tanks where a large volume of water is recovered and sent hack into the grinding circuit. The thickened concentrate is automatically drawn from the bottom of the tanks into launders. About 5 per cent by weight of anthracite dust, coke breeze or other fine fuel, is added, and the mixture goes to an Oliver continuous filter, where the moisture is brought down to about 11 per cent. The filter cake discharges to a belt conveyor which carries it up to the sintering machine, where it falls continuously on the moving grates in a bed about 6 in. thick and passes under an. oil burning igniting furnace, which sets fire to the top surface, just as it moves upon the wind-box and comes over the suction of the sintering fan. This suction shows an average measurement of 12 to 13 in. of water, and gradually burns the fuel contained in the charge, from the top downward, the heat causing the particles to agglomerate or partly fuse together into sinter. By the time this sintering is completed to the bottom of the 6-in charge, the moving grates have carried the charge forward to the far end of the wind-box where the completed sinter is discharged. It is then screened, the fines being returned to the process, the coarse, after cooling, going to railroad cars, in which it goes to the docks at Two Harbors just as does any ether iron ore.

Sintered iron ore as made at Babbitt is clean, porous, dry and fairly free from fines. It assays from 63 to 65 per cent iron, 8 to 10 per cent silica, a little manganese, lime and magnesia, and from .025 to .032 per cent phosphorus. It contains no sulphur and but a trace of titanium. The dry and the natural iron are the same, since there is no moisture. The sintering process changes some of the magnetite into hematite, so that sinter is really a mixture of the two. It is readily reducible and seems to act as "good medicine" for the blast furnace.

Sinter is sold in the market just as is any other iron ore. Its favorable structure, freedom from undesirable elements, and high iron content give it a place as a "sweetener" on almost any furnace burden. The assays given above are representative of present output. Considerable variation and close control are possible. Sinter has been shipped for example, carrying as little as .008 per cent phosphorus.

Between 2.5 and 3 tons of taconite are required to make one ton of sinter, depending on the assay of taconite and

sinter and the amount of iron wasted in crushed stone and fine tailing.

The plant has been in operation about one year, and has shipped between 70,000 and 80,000 tons of sinter. The results have been so favorable that the present output is to be doubled as quickly as the necessary machinery can be installed. Inasmuch as the coarse crushing and roll plants already have excess capacity, this increase is confined to the grinding and sintering plants.

Power for this entire installation comes from a steam plant forming part of the present mill. It consists of four 600 h.p. Edgmoor boilers, with Sanford-Riley stokers, and two General Electric-Curtiss turbines. The boilers carry 200 lbs, pressure, and steam at 200 deg. superheat is sent to the turbines. The turbines give about 2,500 h.p. each, run condensing, and have the usual auxiliary equipment. The fuel used is Pennsylvania or West Virginia screenings, and both coal and ashes are handled entirely without hand labor. The present mill requires about 1,100 average h.p., so that there is available power already installed for a considerable increase in capacity.

The water supply for the plant is ample, both present and future, several large lakes and streams lying close at hand.

Enough land is owned below the mill to impound tailing for many years, excess water being reclaimed and used again in the milling process.

The plant is served by the Eastern Mesabi branch of the Duluth & Iron Range Railroad.

Up to the present time no attempt has been made to build a permanent town, all the Babbitt buildings being of temporary camp construction. This will be changed soon, and living conditions greatly improved,

EXTRACTS FROM THE PROCEEDINGS OF THE LAKE SUPERIOR MINING SECTION NATIONAL SAFETY COUNCIL

HELD IN
DULUTH, MINNESOTA

AUGUST 28 AND 29, 1923.

(Published by arrangements with the officers of the Safety Council.)

OFFICERS OF THE COUNCIL.

COMMITTEE IN CHARGE OF CONFERENCE.

GEORGE MARTINSON, Chairman ..... Pickands, Mather & Co., Hibbing, Minn.
S. E. QUAYLE..... M. A. Hanna Co., Virginia, Minn.
GEORGE H. LOHNEIS... Republic Iron & Steel Co., Virginia, Minn.
B. D. SHOVE..... The Oliver Iron Mining Co., Ironwood, Mich.
WILLIAM CONIBEAR ..... The Cleveland-Cliffs Iron Co., Ishpeming, Mich.

TO LAKE SUPERIOR MINE OPERATORS.

"It has been stated by men who are supposed to be more or less familiar with conditions in our country that half of our accidents are preventable. One would draw the natural inference from such a statement that five or ten years' systematic accident prevention will reduce the number of injuries 50, or at least, 25 per cent. However, foreign experts tell us that it requires from 10 to 15 years to get a fair start, that it takes that many years to stop the natural tendency toward increase in percentage of accidents."

The Lake Superior Safety Conference is held for the special purpose of stimulating and promoting accident prevention through investigation and education. The success of the Conference is assured if mine operators are represented by superintendents, foremen and safety engineers, and sufficient financial aid is forthcoming to pay for the publication of the proceedings.

LIST OF THE LAKE SUPERIOR SAFETY CONFERENCES

No.	Place.	Date.	Chairman.
1	Houghton	April 23-25-, 1919	Byron O. Pickard
2	Duluth	June 19-20, 1919	Byron O. Pickard
3	Duluth	June 24-25, 1920	Richard V. Ageton
4	Duluth	October 26-27, 1922	George Martinson
5	Duluth	August 28-29, 1923	George Martinson

A SAFETY PLEDGE.*

"Here assembled, and mindful of our great responsibility, we pledge our energies to the conservation of human life; to think always of the safety of our fellow-men; to watch for unsafe

conditions at our work, on the streets, and in our homes; and to take the proper measures to correct them.

"We affirm our faith in the aims and purposes of the National Safety Council, imbued with the conviction that we are partners in a great cause. We promise our constant and staunch support of its high principles and guiding service. May that day be counted lost in which we have failed to do some deed or to devote some serious thought for the better care and safety of human kind."

*Copied from Joseph Holmes' Safety Association News.

OPENING ADDRESS.

By Mr. J. H. Hearding, Assistant General Manager, Oliver Iron Mining Co., Duluth, Minn.

MR. CHAIRMAN AND GENTLEMEN—I come from an older generation than you men here. It is hard to realize it, but it is true. I presume I feel about as young as any of you, but growing up in the industry at the time I did my experience has hardly been the same. We had the older methods. I am possibly as much out of place as the fellow who stuttered, and who met a friend on the street one day. The friend told him to go to a certain doctor and be cured of the defect of stuttering. A few days afterwards he met his friend who asked him if he went to the doctor and he said "Yes." "Well," said his friend, "Did he teach you to talk without stuttering?" He answered, "Yes, I can say 'Peter Piper picked a peck of pickled peppers' without stuttering b-b-but it don't f-f-fit into any c-c-conversation."

So possibly what I have to say may not be very instructive to those who are carrying on the safety movement at the present time. The program which you are carrying on was started twenty-eight years ago. In March, 1895, the Lake Superior Mining Institute met at Virginia. The President, Mr. J. Parke Charming, alluding to the address of Dr. Hulst, who recently died, stated that he appreciated what the doctor had said about the wealth of this country, but continuing his remarks, he said as follows: "The question presents itself: Have we in the rush and push of the last fifty years' struggle for material prosperity, devoted a proper amount of attention to the life and health and comfort of the miner? A large proportion of humanity will not take care of itself, will not follow the common laws of health or nature. I regret to say we must use force to compel them. While the natural carelessness of mankind is difficult to overcome, it does not excuse us who know better from continually exerting our influence for right. In 1887 the State of Michigan passed a law providing for the appointment of mine inspectors by the various counties in the state in which mining operations were carried on. The duties of these mining inspectors were to examine the mines from time to time and in case they found men working in dangerous places to order them out, and in case the men were ordered back by the manager of the mine and any accident occurred, then it constituted prima facie evidence of liability for personal damages against the operators. The law also provided that shafts should be fenced, and that the ladder roads should be divided and cased, and that cages, skips, cars and buckets used in the transportation of men should be protected with a covering. It also provided that the inspector should report each year to the board of supervisors of his county the accidents which occurred and under what circumstances, and to indicate which of these were due to the negligence of the men killed or their fellow workmen, and which were due to the negligence of the operators or their managers."

When Jim Rowe was on the safety committee he tried to enforce a number of regulations for the safety and health of the miner, but the operators were rather pugnacious and didn't want any safety inspector interfering, so the authority of the safety inspector was reduced so that he had practically no power to enforce the regulations which had been authorized.

You men will be surprised to know that at that time there was not a shaft that had a rail around the collar and there were no regulations making it necessary. At that time we were using what was called an open stope. I doubt if any of you ever saw an open stope. Oh yes, I see a few who have been in the mining game for a long time and who have seen open stopes. The open stope disappeared long ago with the improvement of mining and the adaptation of new methods. The open stope was a large room as big as this room, and the miners had to continually trim the back, and occasionally it would break loose and come down, severely injurying and sometimes killing the miners. I remember one stope that let go in the Ashland mine and killed four men. The open stopes have all been replaced with a practice coming from Nevada where there were large ore bodies. This new practice was called the Nevada set—now commonly called the square set. I remember in number 8 shaft of the Norrie mine they had a room eighteen sets, or from 125 to 130 feet in height. Once in a while when they were breaking ore there would be a cave in, endangering many lives. Then the square sets were discarded and the top slicing method adopted. On the Mesaba Range, I worked a mine with the square sets, but as the timber cost commenced to go up we went from the square set to the present "sub" system, drawing the ore ten feet above the timber and leaving an open back. All of those conditions have been continually changing for the better, producing greater safety for all employees, and particularly for the man who is doing the work in the mine.

Other improvements also have been adopted. For instance, last Sunday evening I was sitting in a home in the country and they produced two candles and lighted them. Commenting on the use of candles, I harked back to a time when I was time-keeper and warehouseman at the Norrie mine, when we bought three thirty-ton car loads of candles at one time. We bought them in that

quantity in order to save the freight, I said, "Did you ever think of ninety tons of candles being used in any one place," and they said: "No." "Well," I said, "I can remember when allot the light underground was furnished by candles." Later we put in the Norrie mine the first electric lights used underground in this country. We produced a danger right there. We placed wire in the shaft carrying 2400 volts and one man coming in contact with the wires, was electrocuted. In order to take care of that danger, we had to put transformers on the surface to reduce the current before it entered the shaft. Later, the use of the direct instead of the alternating current was a further improvement, for the reason that the alternating current will not permit a man to let go of a charged wire should he happen to take hold of it, while the direct current will almost throw him away from the wire.

Speaking of powder, I can remember a man who was what was termed the "oil boy"—Bill Knight. He used to carry nitroglycerine and pour it into the drill hole. The rest of the men all scattered when he came around to charge the holes. Some of us can still remember that. I can remember when they used nitroglycerine in the hard ore mines at Ishpeming and Negaunee.

You can see that there have been continued improvements in safety regulations. Mechanical contrivances can be used to limit the dangers and great work has been accomplished in making devices which will produce safer conditions for the men working in and about the mines, but the better method is along the program outlined by such meetings as this one. It is the education of the men in regard to their own safety and the safety of their fellow men. That education has done, and will do, more than anything else to conserve life, limb and property.

J. Parke Channing read in his address, above referred to, several interesting figures:

Death Rate Per 1,000 Men Employed 1887 to 1894.

	Below Ground	Above Ground
Gogebic county, Michigan	7.332	.647
Menominee county, Michigan	5.689	1.135
Marquette county, Michigan	4.768	1.093
Iron district	5.670	.981
Copper district	3.511	(including above ground)
Prussia—		
1867 to 1890	1.356	
1881 to 1890	1.253	
1891	1.035	
1892	1.081	
Great Britain—		
1873 to 1882	2.348	.578
1883 to 1892	2.145	.392

And he made the comment at the time: "Why cannot we do as well in this country of ours as they are doing in Great Britain and Prussia?" He said we were obligated to do something to prevent, this great loss of life that is occurring yearly in our mines. The entire meeting concurred in this and many of the members authorized these improvements in the properties under their supervision.

Many instances of carelessness on the part of employees, who from education and experience should have been more cautious, can be related. As an example, Joseph Wilson, engineer at the Adams mine, while walking along a drift came to a raise from the level below that was partly full of ore. There were two men sitting at this point. Without noticing the raise, Wilson stepped into the raise and fell about fifteen feet, landing on soft ore. Neither of the men sitting there called his attention to the raise, but he, knowing its locality, should have been on the look-out for it. It is hardly necessary to state that a safety rail was installed around that raise.

Another engineer, William Doell, when hurrying down a raise in the Spruce mine, paid no attention to what he was doing. Thinking there was a sprag in the raise upon which to put his foot, he attempted to step on to it, and found, too late, that no sprag was there and fell some distance, injuring himself quite severely. This is similar to the case of a Cousin Jack mining captain who was standing at the bottom of the raise at the moment that a bewildered miner fell through and landed at his feet. The captain said: "'Ere, 'ere, my son, wot art a doin' theer," and the miner replied, "Damme, Captain, I was walkin' along and got to the raise and jus' as I was goin' across, I stepped on a plank, and the plank wasn't theer, and down I come, plank and all." That was exactly what Bill Doell did.

When we opened up the first milling pit in Eveleth, I went down into the crater of a mill to show some men how to pick the ore down. The ore was a little sticky and consequently did not run freely into the mill. Noticing the ore receding in the mill, I thought that an entire car had been removed and before another car could be drawn down, I stepped on to the ore directly over the mill and commenced to pick. The fact was that only a portion of a car had been drawn and just as I stepped on the center of the mill, they drew the remaining part of the car out of the chute, drawing me into the ore about up to my hips. Then the ore that I had started slid in to the center of the mill, burying me entirely except for my head and right hand. The foreman, William Burke, heard my shouts and came down to me, taking hold of my hand to pull me out. As he took hold of my hand I remarked: "Bill, this is a darn poor place for a superintendent of a mine to be in, isn't it?" and Bill replied: "You're right. Will you raise our pay? If you don't you won't get out." This is a joke now, but had six inches more ore come into the mill while I was there, I would not be talking to you now.

During 1893, there were two unusual and terrible occurrences underground. On the 27th day of September, a cave-in occurred at number 8 shaft of the Norrie mine, in which 11 men were killed. The next day, a cave-in occurred in the vicinity of the timber shaft at the Mansfield mine and 27 men were drowned, on account of the Michigamme river filling the mine through the caves, before the men could get out. These two disasters made the year 1893 show a very high percentage of casualties on the Northern Peninsula.

The following are some statistics which I obtained from Mr. Barrett, of the Oliver Iron Mining Company. I am using these Oliver figures, because I could not get similar information from all the operations in this vicinity.

These figures refer to the number of men killed, per thousand men employed, and refer only to underground casualties:

1892	5.76
1918	3.26
1919	2.75
1920	.65
1921	1.46
1922	2.32

You see that the safety work has reduced these accidents to approximately one-half and in some instances even less than that, gut the most interesting comparison is that for the first six months of the year 1923, which shows only .4 of one per cent. That record is a very remarkable one and is due, as I said in the first part of this address, to the education of the men to perform their work in a safe manner. It is a wonderful propaganda that has brought to the people of this country a greater happiness, a greater enjoyment and more blessings than any other activity on the part of mining officials which has been instituted in this generation.

I recently addressed a meeting of miners of the Adams, Spruce and Leonidas properties at a picnic at Ely Lake. It was a jollification on account of the usual record they had made in safety work. The record of time lost due to accidents in that district is as follows: In 1922 there were 2,200 days lost. For the first six months in 1923, only 25 days, which means they improved their record 100 times. They may not be able to keep up that wonderful record. I doubt if they can. Men become careless sometimes after they have made a good record like this and relapse into old habits and methods, but the fact that they have been able to do it, is conclusive evidence that the work you men have been doing is hearing fruit. It is a wonderful thing to inject into the safety movement—-the feeling that by protecting from danger, those they love, those they are associated with, and themselves, they are making the community and the whole world a happier and better place to live in.

CO-OPERATION.

BY B. D. SHOVE, IRONWOOD, MICH.

By B. D. Shove, Safety Engineer, The Oliver Iron Mining Company, Ironwood, Mich.

In order that we may get the best results out of our campaign to prevent accidents it is absolutely necessary that all concerned work with greater unity and close cooperation. The four units, the management, the foreman, the workmen and the doctors must work together as one and have a unified goal in order to lower our accident rate by preventing every avoidable accident. No one man, no single group of men can accomplish this end. It can only be done by each and every individual doing his utmost by co-operating to the fullest extent of his ability.

No doubt each of you, at some time or other, has seen a good football team in action. Did you ever stop to think of the close co-operation necessary between those eleven men, in order to get results? Just supposing that when a halfback started to carry the ball around the opposite end that his team mates sat down on their jobs. They did not block their men and gave him no interference. How far do you suppose he would advance the ball? Why he wouldn't advance the ball an inch. Just as soon as the ball was snapped those eleven men opposing would pounce upon him and tackle him for a loss.

Now we all are up against stiff opposition in preventing accidents. The whistle has blown and the ball has been snapped. What are you men going to do? Are you going to get into the game and win against accidents or are you content to be an onlooker and let George do it? If you get into the game we will win. If you do not, we will lose. For

"It ain't the guns or armament
Or tunes the band can play
But it's close co-operation
That makes us win the day.
It ain't the individual
Nor the army as a whole
But the everlasting team work
Of every blooming soul."*

This closer co-operation which we are endeavoring to get must begin with the management. They must be for safety and for it strong. Their moral support must be given to everything which we are trying to do. If they have spent money, they must be willing to spend more money in order to accomplish our desired results. They should make it known that they want all machinery and working places made safe and kept so. In fact, they must be willing to have everything done that is necessary, so that we may prevent accidents. Recently I heard an executive express himself in the following words: "I cannot help but feel that it is much more to the credit of ourselves and of our company to save a life or prevent an accident than to attempt to pay for one after it has occurred. If we can only save one life a year I feel that our efforts will have been more than repaid." If every executive felt and expressed himself along those lines the men on the job would have no alibi for accidents. The greatest good can only be accomplished where there is a spirit of co-operation on the part of each individual.

The foreman is the man who interprets the policies of the management to the workmen. Are your foremen making it perfectly clear to your men what your management wants and expects in regards safety. If they are not, they are neglecting a vital point. Get your men working with you in everything- you do, then results will naturally

follow. Foremen in giving instructions should first make sure that they are fully understood, then see that those instructions are carried out. Your foreman is the greatest exponent of safety you have on the job. If he will take time and patience to educate his men in the safe way of doing their work, our main worry in regards safety will be over, for the greatest safety device known is a careful workman.

*Copied from the California State Board of Health Bulletin.

The workman enters into this co-operation plan to a very large degree. The greatest part of his personal safety is up to the man himself. He is thrown more or less upon his own judgment in many cases, for it is impossible for the foreman to be with each and every one of his men at all times. So you can readily see why it is so important and so necessary to train our men in the proper and safe way of doing their work. When our men are educated to the extent of feeling ashamed of themselves when injured because it reflects on their workmanship and efficiency, then we will get far better results.

The doctors, while they cannot directly prevent accidents, can nevertheless do a wonderful work by preventing trivial accidents from becoming lost time accidents. This is done by proper treatment and returning the man to work. I know from experience that the greatest percentage of workmen who are injured slightly, are more than willing to return to work, without loss of time, if they are properly approached. In May issue of "Industrial Hygiene," Dr. F. W. Dershimer, medical director of the National Lamp Works, General Electrical Company, in an article called "Practical Mental Hygiene In Industry," says that when a physician reassures a patient who is unduly alarmed about his physical condition, he practices mental hygiene, why then cannot the same mental hygiene be practiced in injuries? I recall very vividly being underground one day and was out at the shaft station. Suddenly a man ran by me, limping and I asked him what was the matter. He said, my leg is broken," and brushing me aside he continued to run wildly around the station. Common sense naturally told me his leg was not broken. So I finally got him to sit down and explain tome how he had received his injury. He had been squeezed between a car and post of a set of timbers, I calmed him and explained that his leg couldn't be broken. His attitude immediately changed. He wanted to go right back to work. After taking him to the hospital to make sure that everything was all right, he returned to work with but a slight limp. If when a man reports to the hospital with a slight injury, after receiving treatment, he be patted on the back and told that everything is all right and to go back to work, you will find that practically every man will be willing to do so. If on the other hand he be told "You had better take a couple of shifts," he immediately thinks that his injury is worse than it is and instead of losing a few days it many times runs into a week or more. It would seem to me that practical mental hygiene could be practiced in our industries to a very good advantage.

In closing I will read a short poem called "We Live to Learn," taken from the Safety Magazine of the Duluth, Misabi & Northern Railway, which I think is very appropriate as it so vividly portrays true co-operation:

"Two fool jackasses—Say; get the dope
We're tied together by a piece of rope.
Said one to the other, 'You come my way
While I take a nibble at this new-mown hay.'
'I won't' said the other, 'You come with me
For I too have some hay you see.'
So they got nowhere, just pawed up dirt
And oh; by golly that rope did hurt.
Then they faced about these stubborn mules
And said, 'We're just like human fools.
Let's pull together, I'll go your way
Then come with me and we'll both eat hay.'
Well they ate their hay and liked it too
And swore to be comrades good and true,
As the sun went down they were heard to bray
Oh, this is the end of a perfect day.
Now get this lesson, don't let it pass
We should all copy from the poor jackass
By pulling together 'tis the only way
To put our mines on the map to stay."

MR. MARTINSON—Before we discuss Mr. Shove's paper, I have several announcements to make. The Lake Superior Mining Institute meets in Duluth tomorrow, and we are invited to be their guests tomorrow afternoon and evening. The Minnesota Steel Company's plant is to be inspected in the afternoon. I will distribute cards and you may sign them, signifying if you will be present.

You will notice from the program that this meeting is called the Lake Superior Mining Section of the National Safety Council. This subject was discussed last year and it was decided that the mine operators of the Lake Superior district should be consulted as to the advisability of becoming a part of the National Safety Council. The majority of the operators were in favor of such action. The National Safety Council has assisted us in arranging this program and will aid us in arranging programs for future conferences.

Mr. B. F. Tillson, Assistant Superintendent, The New Jersey Zinc Company, is chairman of the Mining Section of the National Safety Council, and I received the following telegram from him this morning:

Franklin, N. J., August 27, 1923.

Mr. George Martinson,
Duluth, Minnesota.

The mining section of the National Safety Council sends greetings to its Lake Superior Section and trusts that the delegates at the conference will have a very profitable and interesting discussion of the many important topics they have scheduled. The conservation of human and material factors in mining is of so vital importance to that industry that it is believed that it warrants the expenditure of much time and money in the safety field and it is to be hoped that the results of this conference will prove another demonstration of the value of such