PROCEEDINGS OF THE LAKE SUPERIOR MINING INSTITUTE

TWENTY-SEVENTH ANNUAL MEETING
(Michigan Copper District)

HELD AT

HOUGHTON, MICH.

SEPTEMBER 6th AND 7th, 1929

VOL. XXVII

ISHPEMING, MICH.
PUBLISHED BY THE INSTITUTE.
AT THE OFFICE OF THE SECRETARY,
1929.

PRESSES OF IRON ORE,
ISHPEMING, MICH.

CONTENTS

Recent Work of the State Geological Surveys in Huronian and Keweenawan Areas: *1*
(a) Michigan Geological Survey, by Franklin G. Pardee 1
(b) Wisconsin Geological Survey, by E. F. Bean and H. R. Aldrich 4
(c) A Newly Discovered Major Unconformity in the Huronian Rocks of Northern Minnesota, by John W. Gruner 7
(d) Minnesota Geological Survey, by Frank F. Grout 10
Method and Cost tf Mining Hard Specular Hematite on the Marquette Range, Michigan, by Lucien Eaton 11
The Care and Handling of Steel Hoisting Ropes as Practiced in the Lake Superior District, by William J. Richards 18
Accident Prevention Work at the Copper Range Company Mines, by Albert Mendelsohn 21
Scraping Practice at the Montreal Mine, by D. E. Fritz and L. E. Dick 23
Development of Copper Smelting Practice at Michigan Smelter, by George P. Schubert 25
The Sensitivity of the Dip Needle, by C. O. Swanson . 31
Field Blasting at the Volunteer Mine, by L. S. Chabot, Jr. 36
The X-Ray Laboratory at the Michigan College of Mining and Technology for the Study of the Gross Structures and Micro-Structures of Materials, by Roy W. Drier 40
Rapid Crosscutting at the Eureka Mine, by N. E. Nilson and A. L. Foss 45
Lake Superior Mining Section, National Safety Council. 48
Safety and Efficiency, by Charles J. Stakel 48
Safety Work and Safety Practices in Metal Mines. 51
Estimated Iron Ore Output in the United States for 1929.55
Iron Ore Shipments from Upper Lake Ports, 1929 and 1928. 56
Iron Ore at Furnaces and Lake Erie Docks, January 1, 1930 and 1929 56
Iron Ore Receipts and Dock Balances at Lake Erie Ports, 1929 56
Beneficiated Iron Ore, 1929 56
Copper Shipments from Lake Superior District, 1929 57
Iron Ore Shipments by Water, 1885 to 1929 (Chart 57
Distribution of Iron Ores from Lake Superior Ranges, 1928 (Chart) 57
Biographical 57
Index of Biographies 62
General Index. 62

RECENT WORK OF THE STATE GEOLOGICAL SURVEYS IN HURONIAN AND KEWEENAWAN AREAS.

(A) MICHIGAN GEOLOGICAL SURVEY

BY FRANKLIN G. PARDEE, LANSING, MICH.*

For a number of years prior to 1927, the Michigan Geological Survey did not have any field parties in the Pre-Cambrian areas of the State, not because there was no need for this work, but largely because of the lack of legislative support. In 1926, plans were made for a resumption of field work. It is the survey's activities since 1926 that are discussed in this paper. Since there were problems to be attacked in both the iron and copper districts, field work was planned in both areas.

*Mining Engineer, Michigan Geological Survey.

IRON COUNTRY.

During the time when no field work was being done in the iron districts, much of the information that was available from former work was compiled on township maps. This material ranged all the way from the original surveys made by the Michigan Geological Survey in connection with the primary land traverse, to recent exploration and development. Much of this old material was magnetic work of various degrees of accuracy. The rock classification left much to be desired, but by using the best information for both magnetic and geological data some very interesting and informative maps were prepared.

Added to the material obtained in former years by the Survey were the geological data that have been submitted to the office in connection with appraisal of the iron mines. The details of such explorations were confidential, but the broad geological features shown by these operations were made use of in the construction of the township maps. Several land companies conducted

private geological and magnetic surveys which were made available to the State Survey.

The compilation of these data was largely the work of Mr. L. P. Barrett, Assistant State Geologist. His familiarity with the geology of the Upper Peninsula, and his judgment on the reliability of the information at hand, made his compilation of this material extremely valuable. It was found during the assembling of all this material that the areas which held important places in the geological picture often had the least reliable information. Where indications of iron formation were present a great deal of work had been done; but in the areas underlain by granite and other igneous rocks, there were usually few authentic records to be obtained on the relations of the various geological units. The age and position of some of these intrusives appeared to be the key to the structure of some of the Huronian sediments. With a better knowledge of the intrusive granites and greenstones, it was thought, some advance could be made in the problem of the geology of the Huronian iron-bearing sediments.

The Geological Survey keeps the economic aspect of its field work before it at all times. The Survey's projects must combine scientific investigation and practical considerations. For a number of years there has been a lag in the exploration for iron ore in the iron-ore districts of Lake Superior. Some areas were of course affected more than others, and in districts where the mines were being depleted rapidly and where, furthermore, there was little hope that new operations would be started, it was a duty of the Geological Survey to outline the present possibilities of the area and to discover new possibilities if such existed.

Another problem to be considered in locating a field party was the placing of the information obtained in such shape after the work was done that it would be available for distribution. To do so means putting out a map and if the publication of a map is to be feasible, the area covered should be at least as large as a county.

Such were the conditions that existed at the time field work was contemplated for the summer of 1927. The area selected was the southeastern part of Iron County. In the first place, though practically all of this county had been covered by reliable surveys, especially in the areas of known occurrence of iron formation, the southeast corner had been neglected, on account of the metamorphic and igneous character of the rocks. Furthermore, since the mines on the east side of the county were not as numerous as in former years, new operations were needed in the county in order to keep the miners in the district. Finally, with the exception of this southeast corner, all of the county had been covered, and as soon as this work was done a map could be put out which would cover the entire county. Apparently Iron County was a logical place for a survey.

A field party was started there in 1927. Work was commenced at the west side of Township 42 North, Range 33 West. The east side of Township 42 North, Range 34 West had been covered by a private magnetic survey, and the field party started where this work left off. There was an over-lap of the two surveys, but this overlapping was purposely allowed in order to make correlation between the two surveys easier.

During the first summer the field party covered Township 42 North, Ranges 32 and 33 West and Township 41 North, Range 32 West. The important accomplishment of this field work was the location of the extension of the Crystal Falls-Alpha iron formation to the south. This was not new, except that known iron formation areas were connected by magnetic data sufficiently conclusive to make it appear reasonable that a continuous iron formation extended from Crystal Falls south to the State line.

This formation has been prospected, but the south end has not been tested sufficiently to enable accurate formation boundaries to be drawn. The location of the exact boundaries of the iron formations is difficult in this region for a further reason. The true iron formation grades into cherty slate over a wide zone, so that the delineation of the boundary between the iron formation and the slate is difficult. Small isolated patches of iron formation were located by the field party in 1927, most of which, though known before, had been mapped inaccurately or not at all.

In general the results of the summer's work were two: the locating of the formation boundaries, in the area covered, more accurately than had been done in the past; and the observing and recording of the magnetic variations by use of a dip needle. These readings, when platted on the maps in connection with the data on rock outcrops and explorations, enable formation boundaries to be carried with some degree of certainty in areas where the rock surface is covered with overburden. The dip needle is so well known and so generally used that it needs no comment here. This work in Iron County differed from previous work by the Survey in the use of the clip needle only in the effort to maintain a uniform relation between all the readings. This attempt was made in order that readings of different instruments could be compared readily, and more accurate results obtained on that account.

The second summer's work of the field party carried the survey begun the year before to the east and north, and completed Iron county. This work covered Township 42 North, Range 31 West, Township 41 North, Range 31 West, and the south part of Township 43 North, Range 31 West. The granite intrusion in the west central part of Township 42 North, Range 31 West was studied carefully for its influence on the formations of that area, both on account of its metamorphic action on the surrounding rocks and on account of its relation to the structure of the formations in that part of the country.

The metamorphic action of the intrusives has been such that practically all of the rocks in Township 41 North, Range 31 West, the south half of Township 42 North, Range 31 West, and the southeast portion of Township

42 North, Range 32 West have been affected. The large area of mica schist which is thought to be the equivalent of the Michigamme formation covers the major part of this area. The productive iron formation is associated with this formation, and the location of the limits of metamorphism was an important consideration, as the occurrence of ore bodies is limited to the undisturbed portions of this formation.

The Middle Huronian iron formation which occurs east of Crystal Falls has been traced into Section 2, Township 42 North, Range 32 West. The strike of this formation east of Crystal Falls is nearly north and south, but there is a bend to the east in the formation as it is traced south that is apparently caused by the granite intrusion in Township 42 North, Range 31 West. The iron formation that goes through Mansfield also has a north and south strike which is apparently distorted at the south end and given a swing to the east that nearly parallels the formation east of Crystal Falls. It seems quite evident that this mass of granite has influenced the structure of this part of Iron county. The faulted nature of the Middle Huronian gives evidence of dynamic action in this region which is probably due to the same cause.

The field party in 1928 devoted considerable time to the problems just mentioned, and in addition attempted to locate the iron formation on the other side of the granite mass. The high magnetic areas in the northeast corner of Township 41 North, Range 31 West and southeast corner of Township 42 North, Range 31 West, apparently represent this iron formation or its altered equivalent. The field work was continued east into Dickinson County and the magnetic areas connected with the iron formation south of Randville. Whether this is the continuation of the iron formation that was cut off by the granite south of Mary's Lake in Township 42 North, Range 31 West, or whether it is the equivalent of the Mansfield formation which is cut off by the same granite, is still an open question.

The field party in 1928 also did some work in Township 43 North, Range 31 West. An iron formation is known in the north part of this township which had not been traced south on account of lack of explorations and outcrops. An attempt was made to follow this formation magnetically. Some indications were found which make it seem probable that this formation connects through with that shown at the Deerhunt exploration in Section 35, Township 43 North, Range 29 West, Dickinson County. If this is the case, there has been a sharp swing of this formation to the east similar to the bend formations on which the Armenia and Mansfield mines were located.

With the completion of the field work, all the data for Iron County were compiled A map was prepared for the printer and has recently been published. This map shows the interpretation which has been placed on the work of the field party in Iron County as well as that of former operations.

For the summer of 1929 a slightly different problem presented itself. The previous work in the field showed that a knowledge of the stratigraphy of the iron formations was essential before any real advance could be made in the study of the structure of the iron-bearing rocks of Michigan. On the Gogebic Range a careful and detailed examination had revealed the fact that the iron formation can be divided into distinctive beds. The identification of these beds has done much towards advancing* knowledge of the geology of that range. Nothing has been done along these lines in the Marquette and Menominee districts. With this point uppermost in mind, it was decided to put a field party in the western end of the Marquette trough to study in detail the stratigraphy of the iron-bearing and related rocks. The possibilities of hard ore being located in this territory and the recent demand for this type of ore was another reason for placing the survey in this part of the Marquette Range.

The field party for 1929 followed the usual procedure in the use of magnetic observations and mapping of outcrops; in addition one geologist was assigned to the detailed study of the stratigraphy. The results of this summer's work are being compiled, and the study of the iron formation is being completed with the microscope. The area covered was last mapped by the U. S. Geological Survey prior to the publication of Monograph 52. The work done so far indicates that some changes will be made in this early mapping; the exact extent of this revision will be determined only when the whole area has been covered.

COPPER COUNTRY.

In 1927 a field party was started in the Copper Country to determine what information the clip needle would give in solving some of the structural problems of that region. The dip needle, long one of the tools of geologists in the Iron Country, had been shown by recent work to be of value in areas underlain by igneous rocks as well as in those localities where there were iron-bearing sediments. The magnetite in the flows, especially in the heavier ones, was counted on to influence the needle sufficiently to enable these beds to be followed although covered with drift. Previous work in the Copper Country with the dip needle had been confined to limited areas, but where the needle was used the information gained was of value. For a number of years the Wisconsin Geological Survey has been using the dip needle successfully in studying the structure of the Keweenawan rocks.

The field party for the Michigan Survey started work in Houghton County north of Portage Lake. The first work was done in Sections 3 and 4, Township 55 North, Range 33 West. The early part of the 1927 operations was devoted to working out field methods. It was soon found that in order to get the proper information, more readings must be taken than, was customary in the iron districts. By the end of the summer most of the area from the starting point south to Portage Lake had been covered.

In the following summer, field work was resumed with a full-time crew, and the Survey was carried to the south. Some private Work of the same nature as that being done by the Survey was projected in the area scheduled for this summer's operations. An arrangement whereby the two surveys worked together, enabled a larger area to be covered than would have been possible without such co-opration. During the second year the work was carried south as far as the northern part of Township 53 North, Range 35 West.

During the summer of 1929 the Survey, with a smaller party, has been extended from the point operations started in Township 55 North, Range 33 West north through Calumet. On account of some of the later findings, part of the very early work had to be gone over in more detail in order to obtain information comparable with that acquired by the later work.

The methods and findings of this Survey are covered more thoroughly in a paper by Professor Wyllys Seaman which appears in this volume. In general, it may be said that the use of the dip needle for following the flows and mapping the structure in the Copper Country has been successful. The faulted areas are shown up by this method and the undisturbed flows become evident in the study of the results of this work. The location of a large number of longitudinal faults has also been a feature of this work, and from a study of these faults as related to present and past mine operations it is quite evident that the faulting had an important place in the localization of the copper deposits.

FUTURE WORK.

Future field work by the Michigan Geological Survey will carry on the work that has been started. This projected work involves a long period of activity in both iron and copper districts, as a large territory still remains to be covered. In all this field work there has been close co-operation between the Michigan Geological Survey and the Michigan College of Mining and Technology at Houghton, for by such co-operation the best results can be obtained. The Geology Department of the College has been called upon to furnish personnel for this work, and departmental research has been directed along lines that were important to the success of the surveys. The Survey in turn has been the laboratory for the students and for the geological faculty of the college. The aim of both organizations is the discovery and development of the mineral resources of the State, and these surveys constitute one of the means for obtaining that result.

RECENT WORK OF THE STATE GEOLOGICAL SURVEYS IN HURONIAN AND KEWEENAWAN AREAS.

(B) WISCONSIN GEOLOGICAL SURVEY

BY E. F. BEAN* AND H. R. ALDRICH,** MADISON, WIS.

The Wisconsin Geological Survey has made a comprehensive and detailed magnetic survey of 18 townships in known Huronian, 85 townships in Keweenawan, and 185 townships in areas containing largely igneous formations of undifferentiated' pre-Cambrian age.

This work has been going on uninterrupted, except during 1912, for 20 years. It began in the Florence iron district in 1910. Two field seasons were devoted to problems in this northeastern area, during which time there grew the belief that in the great drift-covered area to the west and south of the Gogebic Range a systematic magnetic survey would reveal evidence of the presence or absence of iron-bearing rocks. The organization of the field attack, which has been modified only in minor connections up to the present, was planned in 1913. A description of the area covered in that year and in 1914, and a field manual of magnetic surveying are presented in Bulletin 44 of the Survey.

Briefly, the field attack was a systematic study dealing with the township as a unit. Traverses were run on all north and south section and quarter-section lines with locations tied to government corners. The geologist sketched the lay of the land by means of slope symbols. He sketched drainage, and located swamp boundaries. He interpreted the character of glacial deposits largely from their topographic expression. He searched for, located, and studied rock exposures and openings in the drift. Specimens were taken from outcrops, and analyses of drift composition were made by means of a determination of the composition of 100 pebbles at opportune locations. At intervals of 50 paces along the lines of traverse, readings of the dip needle were taken, and at alternate stations the local magnetic declination was read on the sun-dial compass. Local attraction was traced out in greater detail. The work of the several geologists in the township was assembled on a base map, correlated, and reduced to a common basis through elimination of differences due to the personal equation. This base was then correlated in similar fashion with the work of the same or other parties in adjacent townships and a set of tracings was made. One showed outcrops and magnetic variations, a second showed topography and surficial geology. On completion, there were returned to the office in Madison a set of notebooks, the set of tracings, and a written report covering all phases of the geology.

*State Geologist, Wisconsin Geological Survey.

**Assistant State Geologist, Wisconsin Geological Survey.

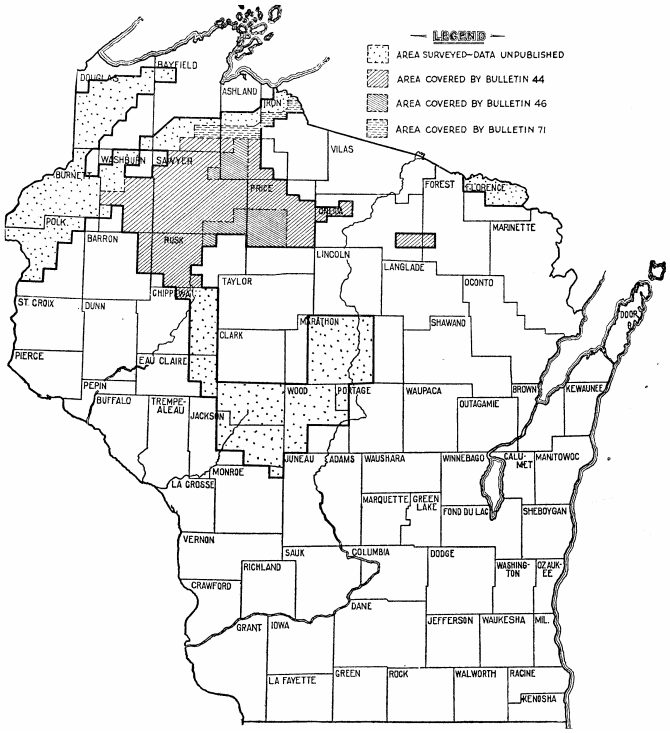

FIG. 1—WISCONSIN—AREA COVERED BY MAGNETIC SURVEY

No such systematic magnetic survey of a large area had ever before been attempted. No iron formations have yet been found in the area covered, but aside from quieting the suspicion that this region was a potential iron country, many results forthcoming have justified the work. In the first place, all that can be learned concerning the bed rock geology of that region, by a surface examination and by means of the only geophysical method feasible for large scaled surveying, the magnetic method, is now on file and available for consultation. The variety of inquiries which have been met by this information and will be met in the future is apparently unlimited. The only further advance in the information about the area will have to come through drilling or excavation, and the data on hand point to the only locations of promise from the standpoint of iron formation. In the second place, the magnetic method proved worthy of the hopes held out for it. By it many formations were traced, although in most instances their absolute nature is still unknown. Their major structure is known, and in not a few instances minor secondary structures were disclosed. In the long run, the over-all, comprehensive picture of the major geological conditions in this drift covered area south of Lake Superior can only be assembled through the accession of data gained by just such a magnetic survey. Furthermore, the detailed geology of specific areas can be approached only by such methods and can be interpreted only in the light of the comprehensive picture which they have made possible. However, the work showed that the magnetic method is of the most value when its results can be tied in with exposures of bed rock, and that the work therefore should advance into unknown country from a control area of known geology. The work in 1913 and 1914 was in country poorly supplied with outcrops and far from the control base, and consequently it leaves far too much to be inferred from the characteristics of magnetic patterns.

The field season of 1915 was devoted to the “squaring up” of the area of the previous two seasons, as shown on the accompanying map. In addition, however, this systematic survey was applied to the townships containing the Gogebic Iron Range. The results of the former, including the results of diamond drilling in that area and in the area of Bulletin 44, are published in Bulletin 46, which is in press at the present time. Bulletin 71 on the Gogebic Geology is also in press.

Throughout the life of the Survey the attitude of research and experimentation has dominated. The return to the Gogebic, an area of many exposures and hence fairly well known geology, reflects the realization that the interpretation of magnetic observations requires calibration against known situations. That work has paid dividends in later interpretative work.

In 1915-16 the Survey organization was confident of the value of the magnetic survey and was debating over the advisability of intensifying the attention to be given to glacial geology. The one required intermittent contact with exposures and known geology; the other could more readily dispense with exposures. The die was cast in favor of improving the magnetic method.

In 1916 field work was shifted to Jackson County in the Driftless area. Here in the vicinity of Black River Falls were numerous exposures of the pre-Cambrian including an iron formation. The attack on the area was as outlined above and there was made available a volume of information on the local geology. The iron formation was traced for considerable distance out into the country covered by out wash sands and Cambrian sandstone. The magnetic method derived much benefit from this contact with known formation.

In 1917, 1918, and 1919 the work was projected eastward in Jackson and Wood counties along the border of the Driftless area, and in 1920 and 1921 it moved up the Wisconsin River Valley. The greater part of Marathon county was covered. In the western townships the drift cover was again encountered, although there are many exposures of pre-Cambrian. In the eastern townships the drift is thin, and a great array of igneous and metamorphic formations was studied with attention paid to their magnetic expression.

In 1922 the attack was made on the Keweenawan problems in the heavy drift of the north. The occasion was fortunate in that about that time the group of geologists under Dr. L. C. Graton, who for several years had been conducting an examination of the geology of the copper deposits of Michigan, were formulating their conclusions. The group very graciously devoted several days expounding their hypotheses and conclusions, and conducting Dr. W. O. Hotchkiss and H. R. Aldrich to the strategic points of interest in support of those conclusions.

During the first season's work on the Copper-Bearing Formations, primary emphasis was laid upon their petrology, structure, and their magnetic expression. It remained for another season to concentrate equally upon glacial geology. The magnetic work bore fruit at the outset. One of the most significant structures of major proportions, the Lake Owen thrust, was first detected by this method; later its existence was proved by outcrop study. This discovery was made in a township which seven years before had been examined by a party dominated by concentration upon iron formation. The later work showed also that the magnetic method could establish the external boundaries of the copper rocks and the limit of intrusives in them, and could segregate the lesser subdivisions of the lava series.

The field seasons of 1923 and 1924 saw the completion of the survey of the south limb of the syncline from the southeast of Douglas county to the Michigan line along the Montreal River. This is the area including the great gabbro intrusions of late Keweenawan age. Fortunately, outcroppings in this belt are abundant, and on this account it became quite simple to get the magnetic expression of a great variety of intrusives and their contact rocks. The work was made to overlap slightly upon the underlying formations of Huronian age in order to get the relationships between the two series and to tie in with the work along the Gogebic.

Probably the outstanding geological results in this area were the detection of formation boundaries in detail, principally of the gabbro intrusions, and of a variety of elements of deformation certain of which correlate with long known faults and folds in the Gogebic, indicating a post-Keweenawan age of the deformation. It is believed that the western projection of the long famed Keweenawan Thrust has been discovered and traced for fifty miles into Wisconsin.

Subsequently, in 1925, 1926, and 1927 work was transferred to the north side of the syncline, in Douglas and Burnett counties. Here structural abnormalities were again encountered, the area of intrusive was outlined magnetically, and the series was broken up into lesser units. Further evidence in support of the Lake Owen Thrust on the south limb was gained through getting the magnetic expression of the long known Douglas County Thrust. These two thrusts have comparable magnetic expression. It was discovered, however, that the formations on this north limb have a magnetic pattern quite different from that of the formations on the south limb. The formations are identical, and it appears that the difference in magnetic patterns expresses the difference in structural dip. This is a discovery which will prove of value in the interpretation of magnetic patterns in unknown country.

The discovery of possibly greatest value is a structural feature which appears to correlate with a feature on the southern limb. This is an arch or anticlinal fold which appears to have been developed across the present trend of the major syncline but at a time prior to the development of the latter, and which has given rise to a new concept of the origin of the main Lake Superior structure described in Bulletin 71.

In the past two seasons, 1928 and 1929, the work has been brought southwesterly across the trough to St. Croix Falls and northeasterly along the southern limb to regain contact with the 1923 work in southeastern Douglas County. Four townships remain to be surveyed in connection with this Keweenawan study and they will be completed in 1930. During this last season the "range" has been carried across a gap in the exposures which is 35 miles long. There can be no question about the existence of the Copper-Bearing Series in this gap, despite the lack of exposures, because the magnetic expression is continuous. Structural abnormalities to account for the absence of exposures in this drift covered country have been interpreted from the magnetic pattern.

A recasting of this review of the work done in Huronian and Keweenawan areas, leads to the following summary statement. For each of the 288 townships covered the Wisconsin Survey has a set of original notebooks all of standard size and makeup, all indexed to facilitate specific reference, and all filed in schematic fashion to render them immediately accessible. For each township we, have a set of four maps, two on a scale of 2 inches to the mile and two on a scale of 1¼ inches to the mile. Of the larger sized maps, one shows magnetic variation and outcrops, the other shows surficial geology and topography. The smaller maps show respectively soil types and timber growth. There is also a filed report based on the data in the notebooks and on the maps, with interpretations of these data by the Chief of the party and his assistants. In addition, the Survey is well along with, the work of assembling township maps into larger units of area, in some cases the unit being the county, in others the basis being the geological formation or series. Again, these maps are of several varieties including topographic maps in county units, and strictly geological maps showing outcrops, formation boundaries based on the collective evidence of outcrops and magnetic variation, and structural elements such as faults and thrusts again based on outcrops and magnetic attraction. The Survey has also made an assembly of maps showing the magnetic attraction plotted graphically to bring out the value of such data in regional studies.

The scope of the field work has gradually broadened. At first, attention was concentrated upon magnetic data and outcrops. The glacial drift was accepted as an ever-present obstacle. The feeling grew that a more intensive study of the glacial drift would reveal indirect clews to the solution of bed-rock geology. As time went on the work became a thorough areal study of all phases of geology in each township.

Because of the rapid development of highways, the glacial geology has proved to be of great economic value. With the glacial maps prepared by the parties of the so-called Mineral Land Survey, the road material geologists are able to concentrate their search in the

most favorable localities. The resultant savings in the cost of highway construction have probably paid for the cost of the areal survey.

Since 1916, contour maps have been made as a regular part of of the field work. Although these lack the precision of the United States Geological Survey topographic maps, they constitute a distinct contribution to the geology of the area, and are of great value to the engineers of the Highway and Railway Commissions.

RECENT WORK OF THE STATE GEOLOGICAL SURVEYS IN HURONIAN AND KEWEENAWAN AREAS.

(C) A NEWLY DISCOVERED MAJOR UNCONFORMITY IN THE HURONIAN ROCKS OF NORTHERN MINNESOTA.

(Published by permission of the Director of the Minnesota Geological Survey.)

BY JOHN W. GRUNER, MINNEAPOLIS, MINN.*

INTRODUCTION.

In the summer of 1928 the Minnesota Geological Survey began the detailed mapping of the so-called Lower-Middle Huronian Knife Lake slates in the extreme northeastern portion of Lake County. (See Fig. 1.) This detailed survey has three objectives: (1) to unravel the exceedingly intricate folding of the Knife Lake slates and Ogishke conglomerate; (2) to find any unrecognized formations and unconformities; (3) to establish with a fair degree of certainty whether or not economically important iron ores exist in the Huronian and Archean rocks east of Winton, Minnesota.

The first and third objectives will be accomplished only after most or all of the district has been surveyed. The second objective, however, has already met with success by the discovery of a: new major unconformity. A short description of it follows. No long detailed rock descriptions will be given here, since they may be found in the numerous older publications of the United States Geological Survey and the Minnesota Geological Survey.[1]

THE FORMER CONCEPTION OF THE STRUCTURE OF THE ROCKS NEAR KNIFE LAKE.

The sequence of the rock formations in the vicinity of Knife Lake (Fig. 2) as given in Monograph 52 of the United States Geological Survey[§] is as follows:

Unconformity

Algonkian system:
- Keweenawan series .... Gabbro and sills

Unconformity

- Upper Huronian ..... { Rove slate; Gunflint formation (iron bearing)

Unconformity

- Lower Middle Huronian..... { Intrusive rocks; granites, porphyries, dolerites and lamprophyres; Knife Lake slate; Agawa formation (iron bearing); Ogishke conglomerate

Unconformity

Archean system:
- Laurentian series..... Granite and other intrusives
- Keewatin series..... { Soudan iron bearing formation; Ely greenstone

*Associate Professor Geology and Mineralogy, University of Minnesota; Geologist, Minnesota Geological Survey.

(1) Clements, J. M., The Vermillion Iron Bearing District of Minnesota: U. S. Geol. Survey Mon. 45, 1903.

Van Hise, C. R., and Leith, C. K., The Geology of the Lake Superior Region: U. S. Geol. Survey Mon. 52, 1911.

Winchell, N. H., The Geology of Minnesota: Geol. and Nat. Hist. Survey of Minnesota, Vol 4, Final Report, 1899.

(§) op. cit., p. 118.

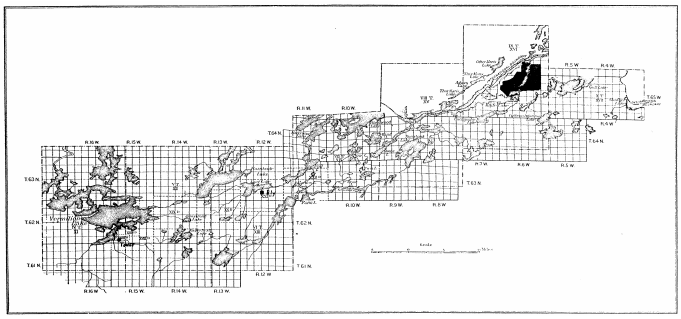

FIG. 1—KEY OF VERMILION RANGE (AFTER CLEMENTS) SHOWING LOCATION OF AREA MAPPED IN DETAIL

Figure 2 was copied from the atlas accompanying Monograph 45 of the United States Geological Survey.[2] It shows two large synclinal areas of Knife Lake slate separated by a narrow belt of Ely greenstone and Ogishke conglomerate. This belt forms the north shore of the south arm of Knife Lake. Toward the west at the junction of the north and' south arms of Knife Lake the greenstone pinches out and the two synclines unite into one. The greenstone is separated from the Knife Lake slate on each side by a narrow belt of Ogishke conglomerate. (Fig. 2.) Toward the east in Sec. 10 and 11, T 65 N, R 6 W, the greenstone disappears under the conglomerates and slates. A wide belt of supposed Ogishke conglomerate continues toward the north for more than three miles. Where the conglomerate ends the two slate synclinoria are shown to unit into one.

The greenstone in the belt mentioned is ellipsoidal and spheroidal[1] over most of the area. Lithologically it does not seem to be different from the Archean greenstone of the type locality at Ely. The conglomerate belt which extends northward from Sec. 10, T 65 N, R 6 W, is apparently not different from that of the type locality on Ogishke Muncie Lake. Many large pebbles, and boulders of Saganaga granite are found in it. The great number of banded chert pebbles is conspicuous. In this connection it may be mentioned that as far as the writer has been able to learn no hematite ore pebbles have been found in Ogishke conglomerate.

(2) Clements, J. M., op. cit.

(1) Clements, J. M., op. cit., p. 141.

Character of the Knife Lake Slates in the Area Studied.

The extent and distribution of the Knife Lake slates studied are shown in Fig. 3. It may be supposed that slates predominate in this formation, but greenish tuffs are equally abundant and conspicuous. Graywackes are also common. Interstratified conglomerate belts are seen occasionally. Very thin lenses of iron formation (Agawa) occur in numerous places. The tuffs indicate a great deal of volcanic activity during the period of their deposition. The slates proper also seem to consist partly of very fine grained tuffaceous material. Practically no black slates indicating the presence of graphitic material were seen. Some of the coarse pyroclastic tuff layers resemble conglomerates closely and may be water-sorted at least in part. These layers have caused considerable discussion in the past as to their origin for often among the ejectamenta there may be found rounded fragments or pebbles of some other rock like granite. Some of the tuffs are full of large sharply angular fragments and probably are not water-sorted.

The occasional conglomerate lenses are easily recognized if they contain granite and porphyry pebbles. These lenses may gradually pinch out or grade into graywacke or pyroclastic material. The graywackes are difficult to distinguish from tuffs, both being similar in texture and color. Usually the tuffs contain megascopic hornblende crystals and are more greenish in color as compared with the gray or greenish gray graywackes. Both rocks often are very massive, the tuffs to such a degree that they could be mistaken for greenstone or some other basic igneous rock if it were not for their stratigraphic positions among other sediments.

Structure of the Knife Lake Slates.

If large portions of the district had not been burned over about twenty years ago, the determination of the structure in the slates would almost be a hopeless undertaking. As it is, the very numerous outcrops are stripped of moss and relatively easily inspected. The criteria employed in unravelling the structure of the region in the order of usefulness are:

1. Horizon markers.
2. Gradational bedding.
3. Drag folds.
4. Fracture cleavage.
5. Cross bedding (in only one place).

Horizon markers used were:

(a) Long lenses of jasper red iron formation.

(b) Agglomerates in the tuffs resembling conglomerates. Some of these could be followed a mile or more.

(c) Tuff layers, weathering with holes which resemble amygdaloidal cavities.

(d) Lenses of conglomerate.

(e) Beds of massive tuff, which resemble porphyries and contain, frequently, hornblende phenocrysts.

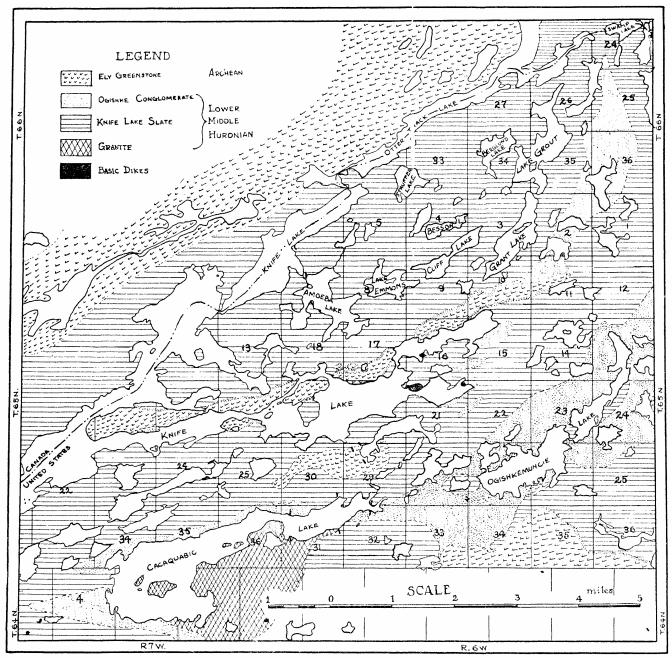

Fig. 2—The Geology in the Vicinity of Knife Lake As Mapped by Clements

Gradational bedding has been of great help. It is fairly well developed in some tuff and graywacke layers which are not over three or four inches wide.

Drag folds are usually very helpful, not only by showing the anticlines and synclines, but also by indicating in some measure the distance the observer is away from the main crests and troughs. The closer a given outcrop is to the crest or trough the more numerous are the drag folds. On long limbs, however, they may be almost absent, or what is worse, may be contradictory. Fracture cleavage is poorly developed or not at all. Only in exceptional cases can one use it and then with reservations.

The folds as far as they have been mapped are almost isoclinal and close to vertical. A 10 deg. overturn is common, though relatively small folds overturned 30 deg. from vertical have been mapped. The general strike of the folds is northeast to east. The pitch is also in this general direction for those folds that have been mapped completely. The angles of pitch vary from a few degrees to 80 degrees.

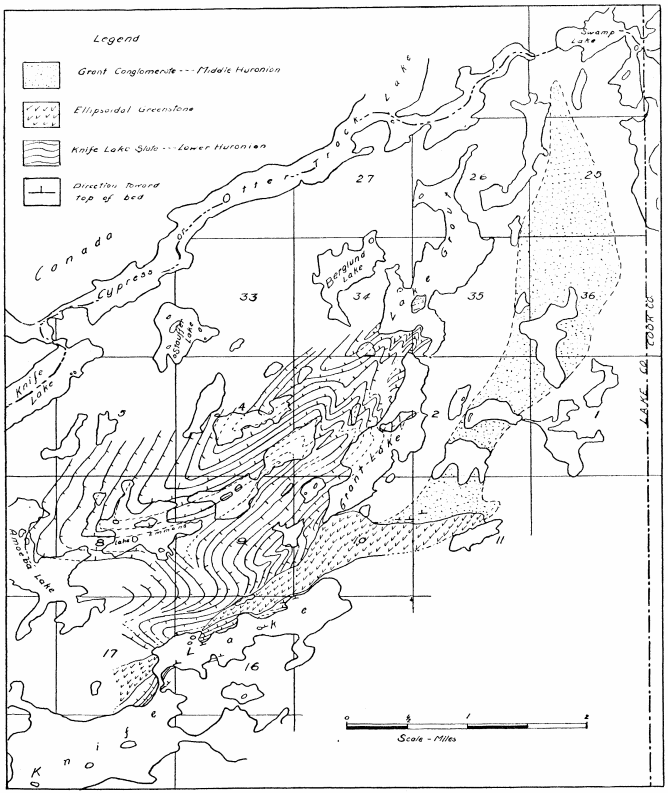

3—A PORTION OF THE GEOLOGY IN THE VICINITY OF KNIFE LAKE AS MAPPED IN 1928 AND 1929

As a rule one would have a tendency to plot a greater average pitch for a fold than it really possesses. This tendency seems to be caused chiefly by the fact that steeply pitching crests or troughs of folds are less easily eroded and certainly are much more conspicuous to the field observer than gently pitching ones. The stratigraphic thickness of the Knife Lake slates surveyed so far is greater than 2,500 feet.

In Fig. 3 an attempt has been made to indicate the main folds and their attitude with respect to the greenstone belt. As the work progresses slight changes toward the margin of the map may become necessary, but the relation to the greenstone is definitely determined as follows:

1. As the folds approach the greenstone no structural control by the greenstone is noticeable as there should be if the greenstone were underlying the Knife Take slates. The folds should swing into such attitude that they could overlie, or at least overlap, the greenstone.

2. Instead, it is found that the greenstone abuts against the slates in such a way that the tops of the sediments unquestionably, as observed in very many cases, are toward the greenstone. While an actual contact between these rocks could not be observed, there are places where only a few feet are conceald. There exists no particular schistosity or shearing along these contacts. In some places, as for example in Section 9, the folds are clearly truncated by the greenstone as one would expect if there had been an erosion interval after the deposition of the slates and before the covering by the basalt flows.

3. The narrow belts of conglomerate between the greenstone and slates as shown in Fig. 2, could not be found along or near any of the contacts. Its conspicuous uniform width on the map suggests a hypothetical conglomerate which was drawn in because the greenstone was supposed to be Archean.

4. The structure of the slates as a whole indicates that if the greenstone flow has any connection with the slates, it is that of capping one of the larger synclines, which is definite proof against its Archean age.

The slates south of the greenstone belt have not been connected with certainty to those north of it. It is hoped that this connection can be established in the coming field season. From the evidence collected so far, it seems fairly certain that the slates connect *under* the greenstone. All the beds so far mapped on the south side of the greenstone for two miles consistently have the younger beds toward the greenstone. The slate exposures approach the greenstone outcrops in one place to within a few feet. Very good gradational bedding in the slates at this place leaves no doubt as to the superposition of the greenstone.

The greenstone belt as shown in Fig. 3, thins out in Section 16. On the old map, Fig. 2, some sediments were shown as greenstone in this section. The greenstone belt is continuous toward the east, and it is possible by following its numerous large outcrops to stay in greenstone till the Grant conglomerate in Section 10 is reached.

POSITION AND CHARACTER OF THE GRANT CONGLOMERATE.

The belt of conglomerate which begins in Section 10 and extends for nearly four miles toward the north (see Fig. 3) to the Canadian boundary, is called Grant conglomerate after Grant Lake in whose vicinity it can be studied most easily. On account of its coarseness in many outcrops, structural features like those in the Knife Lake slates are largely obscured. By far the larger portion of the conglomerate area is heavily timbered. In Section 10, however, the relationship of the conglomerate to the greenstone is clearly shown.

In two outcrops at least the actual contact between the two formations is exposed. The conglomerate rests directly on the ellipsoidal greenstone. Greenstone pebbles are numerous at the contact but become inconspicuous a few feet away. Granite, porphyry and chert (banded and plain) pebbles are predominant. At some places somewhat angular slate and graywacke pebbles occur. The size of the pebbles varies from almost boulders to grit. The beds of the conglomerate, on account of their coarseness, are not well defined. The grits, however, are fairly well bedded and show gradational bedding in places. The tops of the beds are always away from the greenstone. The strike is about east-west, parallel to the greenstone contact. The dip is steeply toward the north in the southern portion of the

conglomerate belt. There also occur small outliers of this conglomerate. One is on the largest island in Lake Grow, and another on the south shore of this lake. These were discovered before the age of the main conglomerate belt had' been established. Since the outliers occur at places where the Knife Lake slates are very thick it was realized from the beginning that they could not belong to the Ogishke conglomerate.

The writer takes this opportunity to thank his assistants, Messrs. J. H. Ffolliott and R. C. Gebhardt, for the splendid help they rendered in the field.

CONCLUSIONS.

In the detailed structural mapping of the rocks in the vicinity of Knife Lake, a new major unconformity has been discovered. A belt of ellipsoidal greenstone, formerly thought to be of Archean age, is a flow of later age than the Knife Lake slates which should be assigned to the Lower Huronian. The flow lies on the truncated folded slates. Steeply dipping conglomerate, formerly believed to be Ogishke conglomerate, was deposited on the slates and flow. The name Grant conglomerate has been given to it. Its age is probably Middle Huronian.

The presence of these newly discovered formations naturally casts doubt on the age of many other greenstone and conglomerate belts in Northern Minnesota mapped formerly as Archean and Lower Middle Huronian respectively.

RECENT WORK OF THE STATE GEOLOGICAL SURVEYS IN HURONIAN AND KEWEENAWAN AREAS.

(D) MINNESOTA GEOLOGICAL SURVEY

BY FRANK F. GROUT, MINNEAPOLIS, MINN.*

The Minnesota Geological Survey is conducting the following activities:

1. A comprehensive study is being made of a series of batholithic intrusives in the region of the Minnesota-Ontario boundary; it is found that most of them are intrusive into sediments of the Ogishke-Knife Lake series. This series having been classified as Lower-Middle Huronian, the intrusives are supposed to be Algoman. Possibly some are as late as Keweenawan.[1] Some masses are still to be studied.

2. The series of supposed Lower-Middle Huronian age has long needed study. Dr. J. W. Gruner, after two seasons detailed structural work, is ready to report that it is divided by a considerable unconformity into two series. (See preceding paper "C")

3. The alterations of the Ogishke-Knife Lake series by later intrusives, both acid and basic, are being given petrographic and chemical study.

4. The Rove Slate formation, from Gunflint Lake to Pigeon Point along the Ontario boundary, has been surveyed in much more detail than before. A report is far advanced and will be published soon as a bulletin. The Logan sills, intrusive into these beds, are of some petrographic interest, and the metamorphism of the slates and quartzites is complex. Mineral deposits include the copper bearing veins of Susie Island, the nickeliferous pyrrhotite of some diabases, both of which have been noted by Dr. G. M. Schwartz[2]; and a series of barite veins.

5. The Survey geologists are watching with much interest the explorations by drilling between the Mesabi and Cuyuna ranges.

6. The Keweenawan intrusives and flows have been traced with more care than heretofore in certain areas, and minor corrections are needed in the maps.

7. Detailed mapping and petrographic study is planned on the anorthosite masses on the north shore of Lake Superior.

8. A state geologic map is now in manuscript and will be published soon with many changes from earlier maps. No map of the geology of the state, larger than a one-page map in a book, has been issued since 1873.

9. The Survey has near completion a bulletin on the water supplies in northwestern Minnesota, and a bulletin on the marls, and limestones of the state.

10. The Survey always furnishes free information about the mineral resources of the state. An increasing number of samples are sent in by the people of the state for identification and testing, in hopes of establishing new industries.

11. The Survey is pleased to report also, that a laboratory has been established in association with the Survey offices, for research work on Rock Analyses. Dr. Frank F. Grout is in charge, and the work is offered to geologists of North America in the hope that there will be a demand for petrographic chemical analyses of rocks in such numbers that the laboratory may be made a permanent institution.

---

*Associate Professor Geology and Mineralogy, University of Minnesota; Geologist, Minnesota Geological Survey.

1 F. F. Grout, Age and Differentiation Series of the Batholiths near the Minnesota-Ontario Boundary; Geol. Soc. of America. In Press.

2 Schwartz, G. M., A Sulphide Diabase from Cook County, Minnesota: Econ. Geol., Vol. 20, pp. 261-265, 1925.

Schwartz, G. M., Copper Veins on Susie Island, Lake Superior: Econ. Geol. Vol. 23, pp. 762-774, 1928.

METHOD AND COST OF MINING HARD SPECULAR HEMATITE ON THE MARQUETTE RANGE, MICHIGAN.*

BY LUCIEN EATON,** LONDON, ENGLAND.

INTRODUCTION.

The mining methods described in this paper are those used in a large mine producing hard specular ore on the Marquette Range in the Upper Peninsula of Michigan. Although the conditions of mining are unique in this district, they are similar to those in many other districts, and information in regard to the methods used and the results obtained should be of interest. The method's now used are an outgrowth of those of former years which have been adapted to conform with improvements in mechanical appliances, changes in the wage scale and labor supply, and the selling price of the product.

The mine is situated at Ishpeming, in the Upper Peninsula of Michigan, 16 miles west of Marquette, its shipping port on Lake Superior.

*Printed by permission of the Director, U. S. Bureau of Mines. (Not subject to copyright.)

**One of the consulting engineers, U. S. Bureau of Mines.

ACKNOWLEDGMENTS.

For much of the information in regard to the early history of the mine the author is indebted to Mr. James E. Jopling, of Marquette, Mich., who has been a mining engineer in the district for over 45 years. Information has also been taken from reports of the U. S. Geological Survey and the Geological Survey of Michigan, from publications of the Lake Superior Mining Institute, and from articles written by the author for the Explosives Engineer and the Engineering and Mining Journal.

HISTORY OF DISTRICT.

Ore was first discovered on the Marquette Range in September, 1844, by United States surveyors who were making township surveys of the region. The first commercial body of ore was found by Marji Gesick, a chief of the Chippewa tribe of Indians, who snowed it to explorers in September, 1845. This discovery was made on what was later the property of the Jackson Iron Company in the City of Negaunee. In 1850 a large outcrop of ore was discovered in Ishpeming about 2 miles west of the original discovery. The ore in the mine to be described is an extension of this outcrop, but the fact was unknown for many years. The ore for which the mine was opened was discovered by diamond-drilling nearly 30 years after the outcrop was found.

The first shaft was begun in 1880, and another shaft, 800 ft. farther west, was begun in the following year. Both shafts were dropped through quicksand. The second shaft was lost; after it had lain idle for about two years, however, it was recovered by the use of cast iron tubbing and was straightened and sunk to the ore. With the exception of the years 1893 to 1897 and 13 months in 1921 and 1922 the mine has operated continuously. The total production has been approximately 10,000,000 tons.

Both shafts are vertical, and the ore was hoisted for many years on cages, but in 1910 the cages were superseded, by skips of much larger capacity.

GEOLOGY.

The ore occurs in the Upper Marquette Series of the Huronian Period, and is overlain by the Ishpeming quartzite and slate, with a footwall of jasper and altered diorite. It occurs as an irregular bed, badly folded and faulted, varying in thickness from a few feet to 100 ft., with an average thickness of 25 to 30 ft. in the larger ore bodies (Figs. 1 and 2). There is an unconformity between the ore and the hanging wall and probably in many places between the ore and the footwall, although the latter is not easy to determine.

In general the ore occurs in a syncline with an axis running east and west. This axis is not straight but pitches downward to the east and to the west from a high point near the middle of the ore body. Both sides of the syncline are present only near the middle as one side or the other has been removed by erosion or displaced by faulting in the other parts of the mine. Three major longitudinal faults have been recognized, and several minor longitudinal and cross faults are known to exist. The dip of the ore is irregular and in general is too low for the ore to run on the footwall by gravity. This fact and the occurrence of many interbedded seams of rock in the ore have had an important influence on the choice of the method of mining.

The ore formation is overlain by quicksand from 50 to 100 ft. deep, and the ore bodies have been followed for long distances under the business portion of the town where the surface rights are not owned by the mining company. For these reasons it is necessary to use a method of mining that does not involve disturbance of the surface.

PHYSICAL CHARACTERISTICS OF ORE AND ENCLOSING ROCKS.

The ore is a hard, specular hematite low in silica and moisture and containing appreciable amounts of lime and magnesia. The iron content is high, about 59 per cent natural, the phosphorus content is 0.100 per cent, and the silica is 5 to 7 per cent. It is separated into two grades, "lump" and "crushed." The physical structure, low moisture, and low silica content make the lump ore especially desirable for the open-hearth furnace.

The ore is tough and hard to drill, and it stands well on exposure to the air. Seams of rock from 1 or 2 in. up to 1 or 2 ft. in thickness often occur in the ore and must be sorted out by hand underground. This fact and the flat dip of many of the ore bodies have made the use of shrinkage stopes impracticable, and a system of open rooms and pillars, with the ultimate recovery of many of the floors, has been found to meet the situation admirably.

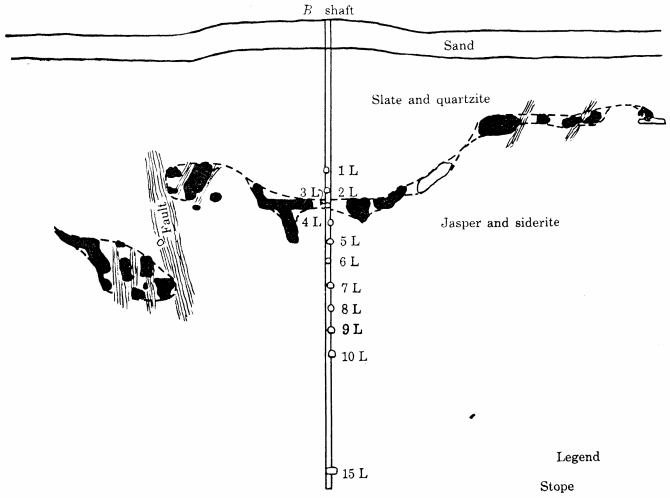

Figure 1. • North • south cross section through shaft, looking east

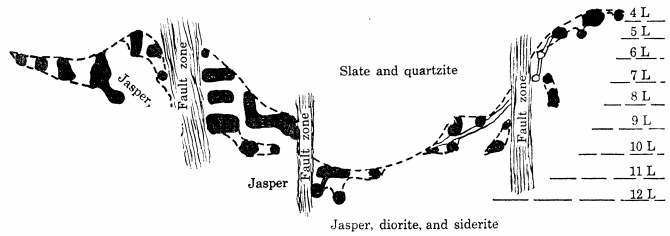

Figure 2. • North • south cross section 2,100 east

The hanging wall in most places is a slate which slacks when exposed to the air; for this reason a small amount of ore is left to protect it wherever possible. Overlying the slate, which is seldom over 15 ft. thick and usually much less, there is a strong, hard quartzite which does not weather or swell when exposed to the air, and which forms an excellent capping for the stopes in the system of mining employed. Under the slate in some places there is a conglomerate of jasper and ore.

The footwall is jasper or altered diorite. The jasper stands well under all conditions, but the altered diorite occasionally gives trouble, especially where it lies at a steep angle or has been sheared by faulting.

The displacement of the ore bodies by faulting and their irregular size and occurrence have rendered prospecting difficult and have made it impossible to block out large bodies of ore for mining. Great flexibility in the method of mining is required; and the ability to follow the ore wherever it goes is essential. These two conditions, as well as the inadvisability of caving the surface and the necessity of sorting out waste rock underground, have been determining points in the choice of a mining method.

In many parts of the mine, where there has been a good deal of faulting, a small amount of magnetite has been formed in the hematite mass; this has seriously interfered with the orientation of local strikes and dips and has complicated the study of the geology, especially of the many systems of joint planes.

Shipping Facilities.

The mine is situated 16 miles from Lake Superior and is served by three railroads. Most of the ore is shipped by rail to Marquette and thence by water to Lake Erie ports, but a substantial tonnage is shipped entirely by rail to Canada and to the Chicago and St. Louis districts. The demand of customers for lump ore of high quality and of limited size has had an important bearing on the choice of mining method and on the treatment of the ore on surface.

Methods of Prospecting and Exploration.

The earliest exploration was by vertical diamond-drill holes from the surface; a great deal of ore has been discovered in this way. In later years the underground workings standing open have become very extensive, so that it is now more economical and more effective to explore by horizontal diamond-drill holes underground. One diamond drill is kept in use nearly all the time, and averages over 2,000 ft. of hole per year. Over 400 holes have been drilled underground during the life of the mine.

Drilling is done with a screw-feed drill driven by compressed air, using “E” rods. Two men are required underground and part of a diamond-setter’s time is needed on the surface. As the mine is piped with air and water for the rock drills, there is little difficulty in making a set-up anywhere.

A large part of the exploration is by drifts and raises, and the ore bodies are usually developed by breast stopes and raises. The old rule of following the ore is a very valuable one in this mine.

Methods of Sampling and Estimating Tonnage and Values.

Production samples are checked by samples taken at intervals from the stopes and drifts and by the appearance of the ore. Only one grade of ore is hoisted, so that the sampling is a simple matter.

The standard methods adopted by the mining companies of the Lake Superior region and by the Lake Erie chemists are used to sample the product on the surface. These methods are fully described in the “Methods of the Chemists of the U. S. Steel Corporation for Sampling and Analysis of Iron and Manganese Ores,” third edition, from which pertinent extracts are published in the 1927 edition of Crowell and Murray’s “Iron Ores of Lake Superior.”

Estimating the tonnage of ore available in the mine is an intricate and arduous task. With a few exceptions the ore bodies are most irregular, and their outline is not fully known until a large part has been extracted. The ore bodies on each level are carefully mapped, and the amount of available ore is calculated as closely as possible. The gross tonnage is also calculated, and the difference between the gross tonnage, the sum of the available ore, and the ore already extracted is the amount left to support the surface. The different pillars

and floors are numbered, and a record is kept on special maps which are brought up to date once a year by subtracting the ore mined from and adding the new ore developed to the figures for the previous years. This system is practically a continuous inventory. It is checked by recalculations every few years.

In calculating developed tonnage, allowances of 10 per cent for incidental rock and 10 per cent for loss in mining (in this case mostly ore left to protect the hanging-wall slate and in the rounded corners of the arches of the rooms) are deducted from the gross amount.

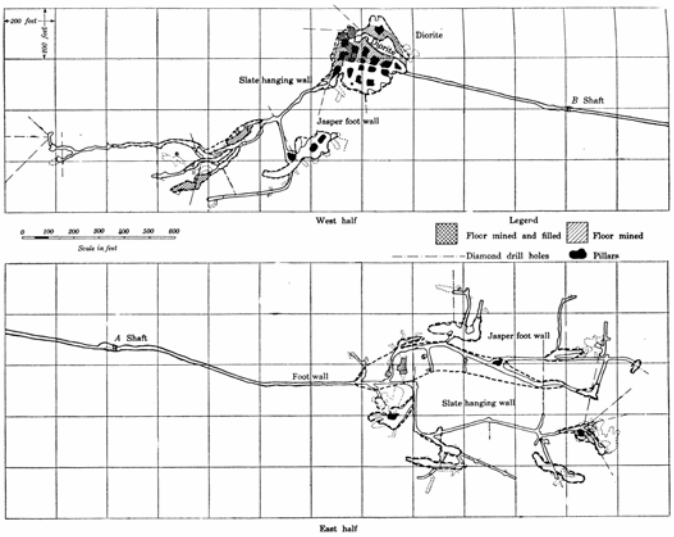

Figure 3.—Outline of ore bodies on tenth level

The analysis of the ore in the different parts of the mine is estimated from composite stope samples for each year and from the results of diamond-drilling, allowance is made for contamination by incidental rock.

Values are calculated according to the formula of the Lake Superior Iron Ore Association. These calculations are too intricate to he included here, but may be found in the 1927 edition of Crowell and Murray's "Iron Ores of Lake Superior," page 107 et seq. At the present time a base ore (51½ per cent iron natural) of non-Bessemer grade is worth $3.25 a ton at the mine. For specific ores the price fluctuates according to analysis.

DEVELOPMENT.

Shafts—The mine is opened by two shafts, "A" and "B," 820 ft. apart. The shafts, which are vertical, are 1,060 ft. deep, and their bottom levels are 1,000 ft. from surface. They are similar in design, 10 by 14 ft. inside of timbers, and are close-timbered for 750 ft. In the last 310 ft, sets were placed on 5-ft. centers in the usual way, but this was found to be a mistake, as the ore that was spilled from the skips cut the wall plates away, and inside lagging had to be put in. There are 15 levels. The first level is at 340 ft. from surface; the intervals between the next four levels are 40 ft. each, but below the fifth level the interval is 50 ft. The levels between the tenth and fifteenth, however, are not connected directly with the shafts, and all the ore below the tenth level is transferred to the fifteenth level by means of chutes.

Fig. 3 and Fig. 4 show the outline of the ore bodies and the development on two levels of the mine.

The shafts originally had two compartments, each 6 ft. 8 in. by 10 ft. One compartment was for the cage and the other for the Cornish pump, pipes, and ladders. In 1910 the arrangement was changed by substituting a 5-ton skip for the cage and by adding a counterweight. The skip road was moved to one end of the cage compartment, and a pocket was built at the other end on every active level (Fig. 7).

On account of the hardness of the ore and the large chunks handled, the skip is very heavily constructed and weighs approximately 10,000 pounds. It is provided with safety catches, and has a small platform on top of the bail, and has a bonnet on the rope for the protection of men when riding. The skip is over-balanced by a 6½-ton counterweight which travels inside a 12-in. pipe in the ladder and pipe compartment of the shaft. The counterweight consists of cast-iron cylinders, 11½ in. in diameter and 5 ft. long, strung on a 3-in. wrought-iron eyebolt 31 ft. long. It is free to turn in the pipe.

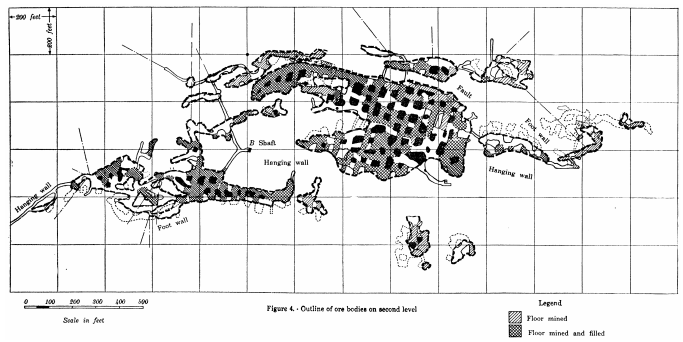

Figure 4. Outline of ore bodies on second level

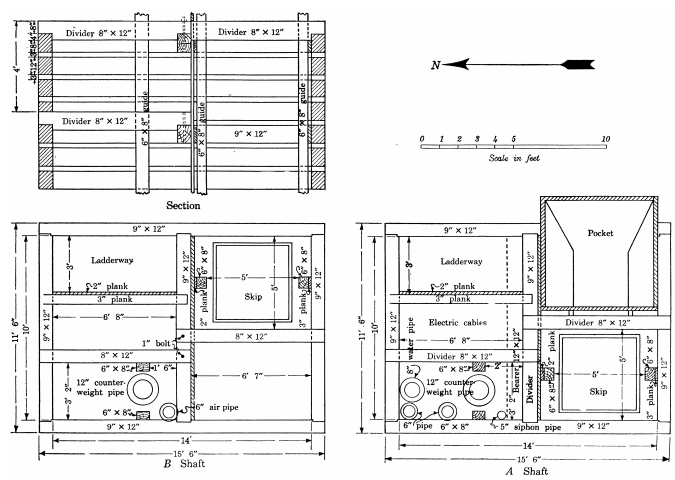

Figure 7.—Shaft arrangement

Drifts and Crosscuts—Except in the slate and diorite the ground in the mine is very hard, and nowhere is timbering necessary for the support of drifts and crosscuts. Practically the only timber used in the mine is that in the shafts, chutes, and ladder roads. The older drifts were driven 7 ft. high and 7 ft. wide, but the standard drift is now 8 ft. high and 8 ft. wide. On main

levels where trolley locomotives are used wider spaces are excavated every 100 ft. for safety zones.

The usual round drilled has the cut above the center, and two cuts are taken out before the bench is blasted out. This is gradually being changed to a center-cut round, which is squared up at the same time that the cut is blasted. In drifting, 60 per cent gelatin dynamite in 1½ by 8 in. sticks is used, and the holes are fired by caps and fuses.

A typical round is shown in Fig. 5-A.

The numbers show the order in which the holes are fired.

The drilling and blasting are done on the day shift, and the broken rock is loaded and hoisted at night. All waste rock is dumped underground and is used as filling.

Drills of the Water-Leyner type, mounted on 3-in. single-screw bars 7½ ft. long, are used entirely in drifting. In very hard drifts, or in those in which rapid progress is desired, two machines are used on one bar. In other drifts one machine only is used. There is one miner for each machine.

The new drills used are of several makes and the latest models; all are 3½ in. machines weighing approximately 150 lb. All machines use anvil-block chucks and 1¼in. hexagon hollow drill-steel. Double taper cross bits with 105 deg. cutting edges are used, the gauge changing 3/32-in. for every foot of length. Sizes are arranged so that a 10-ft. steel will drill a 1⅝-in. hole.

Compressed air is delivered at a minimum pressure of 75 lb. per sq. in. at the drill, and water at 50 to 75 lb. per sq. in. The average air consumption is 75 cu. ft. per min. per machine, including line loss, at peak load.

Loading is done nearly all by hand. A dipper-type loader has been used successfully, but as it requires that the air-compressor be run at night it is not economical, because loading and hoisting of rock is the only work carried on at night. Experiments with a scraper-loader mounted on wheels and driven by electricity have been very successful and more of these machines will be used in future; loading was done at the rate of 20 tons an hour.

Drifting is done by contract, the miners being paid by the foot. They are charged for explosives, carbide, and hand tools, but drill machines and accessories, steel and compressed air are furnished without charge. Shoveling and tramming the rock is charged against the cost of drifting, but is not included in the contract.

In softer ground it is possible to drill and blast a round once a shift, but in hard ground this is accomplished only twice or three times a week.

Raises—Raises are 6 by 6 ft. in cross-section. They are usually driven at an inclination of 45 to 55 deg., but the majority are inclined at the steeper angle. A short pyramidal cut similar to that used in drifting is generally used. In hard ground a 3½-in. drifting machine mounted on a short 3-in. bar, the same used in drifting, is employed; but in the softer ground a dry stoper, using ⅞-in. quarter octagon solid steel is preferred.

No timber is used in the raises, and the miners work standing on stages made of 2-in. plank resting on drill-steel. Chain ladders, made of ¾-in. round iron, hung from iron pins driven into short drill holes are used for the men to climb on. These are left in the raise during blasting, and are often bent and sometimes broken, but in general they serve their purpose well.

STOPING.

Mining is done by means of open stopes with pillar support. A large percentage of the floors between the pillars is recovered, but no attempt is made to recover the pillars themselves, as the ore is overlain by quicksand and much of the mine under the city.

Where the thickness of the ore will permit, rooms 25 ft. wide and 25 ft. high are driven by breast stoping, and floors 25 ft. thick are left between levels. On the upper levels the floors are only 15 ft. thick.

The rooms are advanced by breast stoping (Figs. 5-B and 6-B). A cut 7 or 8 ft. high and as wide as the stope is driven 10 ft. ahead of the bench, which is taken up afterward by lifting holes drilled horizontally. The cut is driven by slabbing holes, and advantage is taken of slips wherever possible. The success of the method depends largely on keeping the corners ahead and properly squared up. When the cut is far enough ahead, the breast is drilled again but not blasted, and the broken ore is cleaned off the bench. Lifting holes 8 to 10 ft. deep are drilled 5 or 6 ft. apart in horizontal rows with a burden of approximately 5 ft. The whole breast is then blasted at one time. As the bottom holes do not reach in as far as those above, a toe is left as a start for a new bench, and the broken ore lies on this toe in a pile high enough to allow the miner to reach the back at the breast conveniently. The back and breast are then trimmed, and drilling for the next cut is started. This method has many advantages. It facilitates trimming the back, always leaves a bench or a pile of broken ore for the miners to stand on, and provides a fairly continuous supply of broken ore for the trammers. It also gives a good opportunity for picking out rock before it has been discolored by the ore. As there are many seams of slate in the ore, this is very important.

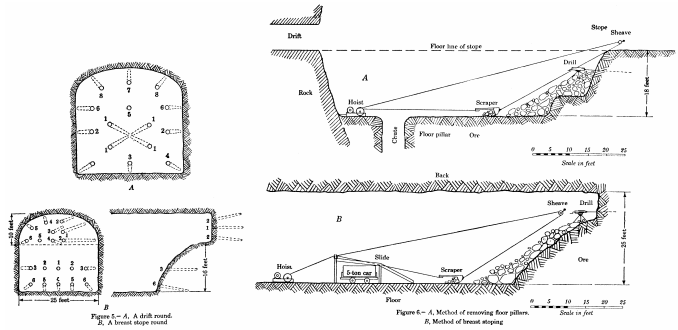

Figure 5.—A, A drift round. B, A breast stope round

Figure 6.—A, Method of removing floor pillars. B, Method of breast stoping

When the ore in a breast stope does not extend up to the next level, it must be mined by back-stoping. In

starting this operation a stage is built with ladders and 3-in. planks, and from it as many holes are drilled as possible. These holes are charged, the stage is taken down, and the holes are fired. The stage is erected again, more holes are drilled, and the operation is repeated until the pile of broken ore is high enough for the miners to reach the back without the stage. The stope is carried up to the top of the ore, and is then advanced longitudinally over the stope below. The ore is broken down by horizontal holes drilled in rows; these holes can often carry a 6-ft. burden. At this stage the trammers usually start at the other end of the pile of broken ore, and tram it out as the stope advances, always leaving enough ore for the miners to stand on.

Extracting Floor Pillars—In mining floors, present practice is to work on a sub-level instead of mining the entire 25 ft. and dropping the ore to the level below (Fig. 6-A). In starting, a raise is put up, a chute erected, a^d the ore around the raise is milled into it by underhand work down to a depth of 18 ft. When the ore will no longer run into the chute by gravity, it is shoveled by hand and later dragged by scrapers. The scrapers are particularly effective in this work because the footwall is often so flat that the ore would have to be rehandled several times if it were shoveled by hand. Raises are usually about 100 ft. apart, as the scrapers can easily reach 50 ft. in either direction from the chute. When the ore has all been mined down to the floor of the sub-level, the remaining 7 ft. can be mined in one lift and dropped 10 the level below.

Breast stopes (Fig. 5-B) are advanced by driving a 7-ft. cut along the top of the breast for the full width of the stope. The holes are 7 to 8 ft. deep, for which 50 per cent extra-low-freezing ammonia dynamite constitutes the charge. When a heading has been sufficiently advanced, it and the lower bench are carried ahead by simultaneous blasts. The same kind of machines and steel are used for drilling as in drifting, but the machine is mounted on a light tripod without weights instead of on a bar.

About five hours of drilling is done per shift; the machines drill from 5 to 6 ft. per hour and average about 25 to 30 ft. per shift. In full-sized stopes the burden is approximately 1 ton per foot of hole, and is less in the breast holes and more in the bench holes.

In the majority of cases one miner works in a stope, but occasionally there are two miners using two machines. The miners are paid by contract according to the number of cars (2.5 tons) crammed from the stope; the size of the stope, the hardness and toughness of the ore, etc., are taken into account in setting the price. Contracts are charged with all explosives, carbide, picks, shovels, and other hand tools, but are not charged for compressed air, or for drills and drill steel.

The ore breaks in large pieces, so that a good deal of sledging and secondary blasting is required. The largest pieces are block-holed for blasting, and the flatter pieces are bulldozed. This work is done by the miner as part of his contract.

Distribution of Drill Steel—Each contract has its own steel, stamped on the shank with numerals ½-in. high, and receives each day the same steel sharpened that it sent up dulled the day before.

The sharpened steel is sorted after being tempered and is made up in bundles of 100 to 125 lb., held together by hardwood wedges in a welded iron ring 4½ in. in diameter. The wedges and rings are used over and over again, but one new wedge is used in each bundle, and on that wedge the contract number is written with blue chalk. The dulled steel is not sorted. Sharp steel is delivered by the cage-riders at the proper levels, and is carried to the working places by the miners. Dull steel is handled by the same men, but in the reverse order.

The average consumption of drill steel in 1928 was .105 lb. per ton of ore and rock produced.

Loading Ore in Stopes.

By Hand—In stopes where there is much rock to sort out, and in stopes the life of which will be short, it is better to load the ore by hand than mechanically.

The standard car is made entirely of steel, is of the end-clump type with the body rigidly fastened to the truck, and is equipped with 14-in. roller-bearing wheels. The car stands 37½-in. high, weighs 1,400 lb. empty and 7,000 lb. loaded, and carries a load of 5,600 lb. or 2½ tons; it has a capacity of 37 cu. ft. The track is 24-in. gauge and is laid with 20-lb. rails.

In most places the tram is short, and the car is dumped into a chute by means of a cradle. Where the tram is long the trammers are supplied with a 1½-ton storage-battery locomotive.

The trammers (loaders or shovelers) work in pairs on contract; they are paid a certain price for filling the car and 1 cent for every 45 ft. trammed. When a locomotive is provided, only the filling price is paid. The contract basis is as follows:

Price Per Car (2½ Tons).

	Large Piles	Stopes	Drifts	Chutes
Hand-filling	$0.47	$0.52	$0.57	.....
Chute filling	.....	.....	.....	$0.20
Tramming (per 45 ft.)	.01	.01	.01	.01
Minimum from chute	.....	.....	.....	.28
Minimum by hand	.55	.60	.65	.....

NOTE:—Prices are about 10 per cent higher for wet places. Prices for filling vary with the type of chute.

Loading By Scrapers Into Chutes—On sub-levels and where a chute is within reach the broken ore is moved from the breast to the chute by scrapers (Fig. 6-A). These scrapers are all of one design, 48 in. wide and 7 ft. long, of the hoe type, and weigh 1,500 lb. The blade, side-plates, and draw-head are made of manganese steel. The blade is the only part that wears appreciably, and this has a life of 6,000 to 10,000 tons, averaging about 8,000 tons.

The scraper is hauled by a 25-h.p. double-drum electric hoist, with planetary transmission, using ⅝-in. extra plow-steel wire rope with independent wire-rope center (Fig. 9). The motor is 25-h.p., 900 r.p.m, 440 v.a.c, 3-phase, 60-cycle, of squirrel-cage type. A complete scraping outfit, exclusive of electric cable, costs $1,150 set up in place.

One miner and one scraperman constitute the crew in a stope.

The scraperman helps the miner in setting up and tearing down his machine, and the miner helps the scraperman rig up his scraper-blocks. The miner is paid by the car trammed from the chute and in most places the scraperman is paid by the day. This system is gradually being changed to a contract basis for both men.

Contract prices per car (2½ tons) dumped in the chute vary from 90 cents to $1.50, including both breaking and scraping.

Loading Cars With Scrapers—In a few places semi-portable steel scraper-slides are used to fill main haulage cars (Fig. 6-B). The scraper slides are not mounted on wheels, and must be taken apart to be moved. The hoist is not mounted on the slide, but is set up at one side of the track, and the ropes pass through blocks hung from the back or from the framework of the slide. Both hoist and scraper are of the same type as used in the stopes, previously described, and the crew in the stope is also the same—one miner and one scraperman.

Main-line cars stand 56 in. high and hold 76 cu. ft. (5^ tons). Exclusive of switching, the time required to load a car is six minutes. Including delays and switching, four cars (22 tons) are loaded in an hour.

The number of places using this equipment is being increased. The slide weighs 3,660 lb. and costs $360.

UNDERGROUND TRANSPORTATION.

Trolley locomotives and large cars are used on three levels—the eighth, tenth, and fifteenth. On most of the other levels storage-battery locomotives are used with 2.5-ton end-dump cars. There are six trolley locomotives and 11 storage-battery locomotives in the mine.

The storage-battery locomotives vary in weight from iV2 to 4 tons. They are all 24-in. gauge, and all but two are equipped with Edison A-4 cells.

The trolley locomotives are all 6^2-ton, 250-volt, double-motor machines. The track is 30-in. gauge, laid with 40-lb. rails.

The cars are of rocker-dump design and hold 76 cu. ft. (5.5 tons of ore) (Fig. 10). Both locomotives and cars are equipped with automatic couplers. These cars are pulled to the shaft in trains of five or six, and the loaded cars are left at the shaft to be spotted by a tugger hoist, while the locomotive returns “inside” with a train of empties. An automatic switch turns the empties onto a siding as soon as the cars are dumped, in order to leave the main line clear for the next train of loads. No uncoupling is necessary except at the locomotive.

The cars are dumped one at a time into the shaft pocket, which has a capacity of only one car and acts merely as a chute through which the contents of the car are discharged into the skip. The loading time is 10 to 12 seconds.

No skip-tenders are employed; the cars are dumped by two skip-riders who go from level to level dumping the loaded cars that have been left on the sidings. The wages of these men is charged to tramming.

The standard chute in use underground is the Alaska-Tread well finger chute slightly improved (Fig. 8). For 20 ft. above the chute the raise is put up at an angle of 45 deg., and is then turned to right or left or upward, so that the velocity of the ore in falling will be checked by the elbow thus formed. The chute itself is made of 3-in. hemlock plank and is lined with ⅜-in. boiler plate. Chute fingers are made of 4 by 6-in. fir dressed on all sides to 3½ by 5½-in., and are painted before being taken underground. The strap forming the hinge at the top is of ⅜ by 4-in. soft steel, and the wearing shoe at the lower end of the short member is a manganese-steel casting. The apron to catch the dribblings that pass through the fingers is made of steel. As all sizes are standardized throughout the mine, the various parts can be ma die up in the mine shops in quantity at considerable reduction in cost.

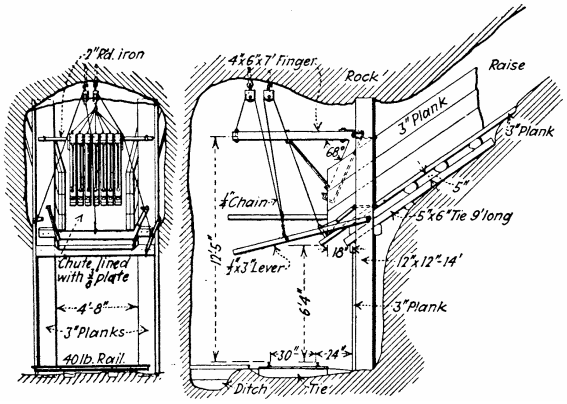

Figure 8.—Design of improved Alaska Treadwell finger chute adopted as standard

After a raise has been worn smooth, the time of loading at the chute is short; a 2½-ton car can he loaded in 15 to 20 seconds and a 5-ton car in less than half a minute. The efficiency of these chutes has been a large factor in maintaining a large production.

PERCENTAGE OF EXTRACTION.

One of the characteristics of the room-and-pillar method of mining is that a large percentage of the ore reserves is left in the mine as floors. While the breast stopes are advancing, floors on the line of haulage can not be mined unless provision is made to transfer the ore to

lower levels. The extraction in wide bodies is approximately 65 per cent, but in narrow ore bodies with strong walls standing nearly vertical it may be as high as 90 per cent. The average for the mine has been 72 per cent.

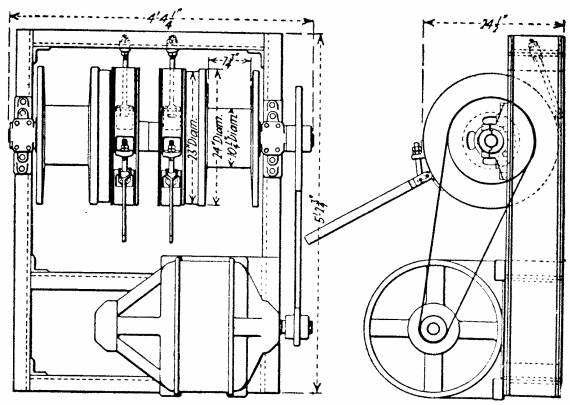

Figure 9.—Design of planetary scraper hoist

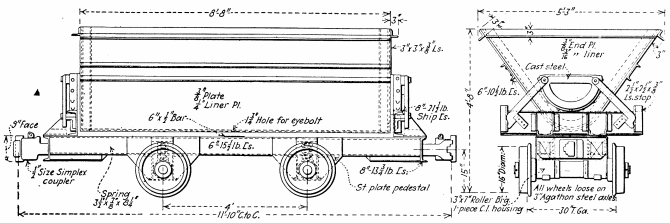

Figure 10.—Sketch of 76-cubic-feet rocker-dump ore car used on main-line tracks

The percentage of extraction can be worked out very closely by a checker-board system, determining the percentage of ore mined in the stopes and pillars and also in the floors, and combining the percentages. The results check very closely with actual production.

VENTILATION.

Only natural ventilation is needed. The downcast is through an adjoining idle mine, with which there is a connection from the eighth level in Shaft A, and the upcast is through both the hoisting shafts. With a little care there is practically no trouble in distributing the fresh air to all parts of the mine.

FIRE HAZARDS.

Although both the shafts are wet and there is very little timber in the mine, nevertheless a complete system of fire doors has been established, so that the incoming air can be instantly cut off and the flow of air between the two shafts can be instantly stopped by merely turning compressed air into the pipe line leading to the door latches. On each level at the shaft, in each headframe on the surface, and at the downcast airway there is a valve for this purpose.

First-aid and fire-helmet crews receive regular monthly training from the company's central organization and from the Bureau of Mines Mine Rescue Car when it visits the district.

TABLE 1—SUMMARY OF COSTS.

Number of mine: No. 1. Period covered: Year of 1928.
Long tons ore hoisted during period: 420,000.
Mining method: Open stopes with pillar support.

	Labor	Supervision	Compressed air, drills, and steel	Power	Explosives	Timber	Other supplies	Total
Development:								
In ore	$.027	$.004	$.015	.....	$.009	$.003	$.009	$ .067
In rock	.080	.009	.030	.....	.022	.003	.007	.151
Mining	.514	.028	.104	$.006	.105	.002	.011	.770
Transportation (underground)	.142	.007	.....	.042	.....	.005	.048	.244
General underground expense	.075	.007	.004	.060	.....	.....	.034	.180
Total	$.838	$.055	$.153	$.108	$.136	$.013	$.109	$1.412

TABLE 2—SUMMARY OF COSTS IN UNITS OF LABOR, POWER, AND SUPPLIES.

Number of mine: No. 1. Period covered: Year of 1928.
Long tons ore mined and hoisted: 420,000.
Mining method: Open rooms with pillar support.

	Development	Mining	Total
A. Labor (Man hours per long ton):			
Breaking (drilling and blasting)	.112	.342	.454
Timbering and filling	.022	.051	.073
Mucking	.060	.310	.370
Haulage and hoisting	.017	.220	.237
General	.032	.096	.128
Supervision	.014	.037	.051
Total labor underground	.257	1.056	1.313
Average tons per man per shift	.....	.....	6.10
Labor, percentage of total cost	.....	.....	65.
B. Power and Supplies:			
Explosives (lb. per long ton)	.196	.705	.901
(Kind and grade)	60% l.f. ammonia	50% l.f. ammonia	.....
Timber (b.m)	.221	.224	.445
Power (kw.h. per long ton):			
Air compression	.....	4.33	.....
Hoisting	.....	2.04	.....
Pumping	.....	4.02	.....
Scrapers and lights	.....	.41	.....
Haulage and lights	.....	.76	.....
Total		11.56	
C. Percentage of Total Cost:	15.4	84.6	100.0

TABLE 2—DETAILS OF COSTS IN UNITS OF LABOR, POWER AND SUPPLIES.

	Drifting	Raising
Size of excavation	8 by 8 ft.	6 by 6 ft.
Timbered or not	Not	Chutes only
Physical properties of rock and ore	Hard	Hard

A. Labor (Man Hours per Foot):	Total Development
Breaking	7.11
Timbering	1.40
Mucking	3.81
Haulage and hoisting	1.08
Supervision	.81
Total labor	14.21
Feet per man-shift of 8 hours	0.5634

B. Power and Supplies per Foot:	
Explosives (lb. per ft.)	12.5
Timber (bd. ft.)	13.4
Total power (kw.h)	.62

C. Percentage of Total Cost:	
Labor	62%
Supplies	38%

THE CARE AND HANDLING OF STEEL HOISTING ROPES AS PRACTICED IN THE LAKE SUPERIOR DISTRICT.

BY WILLIAM J. RICHARDS, PAINESDALE, MICH.*

HISTORY.

Wire appeared as far back as the first Egyptian Dynasty (4000-5000 B. C.) when gold and copper, cut into thin threads, were used for making jewelry and cloisonnee. About the fourteenth century the "drawing" of wire, that is the pulling of wire through a die, appeared but it was not until the latter part of the seventeenth century that this was introduced into England. By 1745 wire was so commonly used that gauges were required for designating the various sizes, the oldest being the Birmingham gauge.

Little progress was made in the manufacture of wire rope until 1840, in which year John A. Roebling started the manufacture of wire rope at Saxonburg, Pennsylvania. His first ropes were used to haul canal boats up the inclines of the Portage Railway to connect with the Pennsylvania canal across the Allegheny Mountains. The first patent relating to the use of metal ropes, patent number 58064 granted to A. Bull in January, 1830, described a hemp rope in which metal wires were mixed with hemp fiber to make a rope stronger than the ordinary Manila rope.

The first use of wire rope for large construction was in suspension bridges. As early as 1816 a suspension bridge in which the main cables were of wire was built across the Gala Water, a branch of the Tweed in Scotland. A similar bridge was built across the Tweed in 1817. In the supporting cables of both of these bridges the individual wires were laid parallel and were held together by the sewing of wires wrapped: around the cable at frequent intervals. Roebling's first suspension bridge was erected across the Allegeheny at Pittsburgh in 1844; by 1869 the Brooklyn Bridge was under construction (1869-1883).

*Master Mechanic, Copper Range Consolidated Mine.

MANUFACTURE.

Since the use of wire in rope making is primarily for the purpose of securing great strength per unit of weight and of cross section, much effort has been made by manufacturers to secure the best possible material for the wires forming the rope. The ultimate strength of some of the wire used is as high as 350,000 pounds per square inch, although the ordinary value for the ultimate strength of structural steel is only 64,000 pounds per square inch.

To secure these high values extreme care is used throughout the entire manufacturing process. Select iron ores are used for the pig iron; the steel is made in special furnaces; the blooms are cropped a maximum amount to remove all impurities and imperfections; and the rods and wires are cleaned, dried, and heat-treated several times during the drawing-down process. The twisting of the wires into strands and of the strands into ropes is done by machinery in which the tension is carefully controlled to secure a uniform and reliable product.

The smallest stranded wire product listed (it can hardly be called rope) is "Aviator Cord." It is only 1/32 of an inch in diameter, is composed of seven wires, has an approximate breaking strength of 200 lb., and weighs only 0.35 lb. for each 100 ft. in length. This material is used for stays on aeroplanes. A more pliable cord for steering gear is made by winding six strands of seven wires each around a cotton center. Some other small sizes are made especially for sash cords, clothes lines, signal cord, smoke stack guy wires, lightning rods (copper) and mast arm rope for arc lights. Larger sizes are made for such purposes as sand lines, well drilling lines, mooring lines, and rigging lines for marine service. Larger sizes are also made for tiller rope and for large diameter towing hawsers. Haulages and mechanical power transmission lines also have their special ropes in various materials and sizes.

USES.

The uses of wire rope are extremely varied. One of the most spectacular uses is in suspension bridges. The new Hudson River Bridge between Fort Lee in New Jersey and Fort Washington in New York, which is to have its first roadway opened to traffic in 1932, will have a main span of 3,500 ft. (The Brooklyn Bridge span is approximately 1,600 ft.) and the length of the main cables will be one mile. The cables are composed of 3/16-in. diameter wires in 61 strands, each of which contains 434 wires. The wires and strands are laid parallel. In their final condition these cables will be of circular cross-section approximately 36 in. in diameter.

An example of extremely large hoisting rope is the rope made for the Spanish-American iron mine in Cuba. It is 3 in. in diameter and has the usual six strands of 19 wires each around the center strand. The latter is composed of an independent wire rope, 1⅛-in. in diameter, made of six strands of 19 wires around a hemp center. The hoisting drums are 20 ft. in diameter and are able to lift a load of three cars whose total weight, including ore, is 460,000 lb. The maximum grade is 25 per cent.

Mine hoisting ropes in the Lake Superior district are of two shapes, flat and round.

Flat Rope—Flat ropes consist essentially of a number of wire strands of alternate right and left lay, sewed together at short intervals with soft iron wire in cross bands. Flat ropes do not have a tendency to twist, and when wound on a hoist reel they produce, by the piling up of the rope, the effect of a conical drum. They are used but little in the Lake Superior district, the only example reported being from the Hamilton No. 2 Shaft at Iron Mountain. The ½-in. x 5-in. flat rope used has an allowable working load in plow steel of 23.6 tons, a load which surpasses that of a 1¾-in. diameter 6-in x 19-in.

round rope of the same grade of material whose allowable working load is only 22 tons.

Round Rope—Although round hoisting ropes come in several arrangements of strands, wires, and hemp centers, the six strand ropes are the only kind reported from the Lake Superior district. These are of the following varieties:

(1) Standard—Six strands on a hemp core. These are made in either right or left hand lay; that is, the strands are twisted either to the right or to the left. In this type of rope the ware is twisted into strands in the direction opposite to the twist of the strands into rope.

(2) Lang Lay—Lang Lay is a rope in which the strands are twisted in the same direction as that in which the wires are twisted in making the strand, a method which exposes more of the wire surface. Very few of these ropes are reported in service, most of the ropes being of 6 strands of 19 wires.

(3) Seale Lay—In this variety the strands are made up of large outside wires wound around a number of smaller wires, thus producing a rope that resists abrasion very well.

In order to determine the general practice in the care and handling of hoisting ropes followed in the Lake Superior district, a questionnaire was circulated asking for the following information: kind and size of rope, various lengths used, method of fastening' to skip or cage, inspection practices, hoisting speeds, methods of handling, hoisting shaft data, skip data, lubrication method's, life of the rope, condition of shaft, and size and kind of head sheaves and idlers. Space was left for additional remarks and descriptions. The replies covered about 60 different rope installations, and the variety of information was extremely interesting.

(1) Kind—The round "standard" cable with 6 strands of 19 wires each, wound on a hemp center, is the hoisting rope most commonly used in the mines questioned. About ⅔ of these cables are made from plow steel, the highest quality plow steel being used only in the ropes designed for heavy loads and great length. A 6 strand 19 wires crucible cast steel rope is second in popularity.

(2) Size—Rope sizes ranges from 1-in. diameter, used in shafts of perhaps 500 ft. depth with a 2½-ton load, to 1⅜-in. and 1¾-in. The 1⅜-in. rope is used on the Iron Range in 3,000-ft. lengths for rock loads of 9 tons and skip weights of 5 tons; the 1¾-in. rope is used in the copper mines for rock loads of 6 to 10 tons, and in one case is 10,000 ft. in length.

(3) Methods of Fastening Rope to Skip or Cage—The method of fastening is generally that of shackling around a thimble, the rope being held together with Crosby Clips. A variation of this method is the use of clamps and wedges to hold the ends of the rope around the thimble; in some cases clamps are put on and hammered down while red hot. Sockets are used in about 20 per cent of the installations: in these cases the end of the rope is brushed out and turned back, and the babbitt is run into the socket. In only one case is there record of zinc being used for this purpose. The shackling practice is, in general, to cut off the part of the rope around the shackle once every two or three months and to reshackle. Resocketing is usually down every 90 days.

(4) Inspection Practices—Inspection practices show quite a variation. In the majority of cases ropes are inspected daily. In addition there are periodical inspections by the master mechanic, at which times the ropes are calipered and the broken wires are counted. Some inspections are weekly, and others twice a month; in one case inspection is only monthly. One vertical shaft is test ed monthly by the dropping of the cage to see that the safety devices are in working order.

(5) Hoisting Speeds—The hoisting speed for men is from 600 to 800 ft. per min., although in one case a speed of 1,400 ft. per min. is reported. Hoisting speed for ore varies from 500 ft. to 2,000 ft. per min.; in the majority of mines it lies between 1,200 and 1,500 ft. In the Copper District rope hoisting speeds sometimes reach 3,500 ft. per minute.

(6) Methods of Handling-—The methods of changing the rope on the drum vary considerably. Many of the smaller mines do this work entirely by hand, while many of the larger mines have air-driven engines to drive the reels which take off the old rope. The general practice is to disconnect the old rope at the shaft collar and to wind it on the reel as the opposite skip comes up. A hemp rope, following the old rope over the idlers, is attached to the new rope, which is thus pulled back, attached to the drum, and wound on as the opposite skip is lowered.

(7) Hoisting Shaft Data—Most of the shafts in the Iron District are vertical, although reports were received from a few inclined shafts. Many of these hoists are balanced with skips on one rope and cages on the other, while others have counter-balances running in a pipe. On the other hand, in the Copper Mining District only a few of the shafts are vertical, most of them being on an incline which varies from 30 to 70 deg. from the horizontal. Dry shafts prevail in the Copper District, although a few are wet; in some of the latter the water is strongly alkaline and corrosive to ropes. Wet shafts are common in the iron mines, with the water slightly acid in some of them and slightly alkaline in others.

(8) Skip Data—The load of ore varies from 2½ to 7 tons in the Iron Mining Districts, and to 10 tons in the Copper Mining District. There is considerable variation in the ratio in weight between the skip and rock and also in the accuracy of the data. Some of the 2½-ton ore loads have skips of 1½-tons weight, a weight which is also given as the minimum for a 3-ton load. The 4-ton load has skips from 2 to 3 tons in weight; the 4¼-ton load has skips from 2½ to 3½ tons; while the 5-ton load shows one skip, as small as 2 tons in weight and one as large as 5 tons. One 5½-ton load reports only a 2-ton skip, while 6 and 7 ton loads both report 5-tons of skip. Where cages are used for ore hoisting, the weight given

for ore in one case is 5,000 lb. with cage weight of 7,500 lb.; in another it is 7,000 lb. with a cage load of 9,600 lb.

(9) Lubrication—There is quite a difference in lubrication practice. About 70 per cent of the mines use some form of cable dressing applied hot by drawing the rope through a box containing the dressing. Other mines supplement this method of lubrication by painting the dressing on the cable after it is placed on the drum. Still others lubricate only by brushing on the dressing. Two apply lubricating oil continuously from the shaft head; and two, one an iron mine and one a copper mine, use no lubricant whatever, and yet they find that the life of the rope in time and in tons hoisted is about the average obtained by the others. Several add used oil to the dressings purchased. Intervals of treating with lubricant vary from every two weeks up to twice a year.

(10) Rope Life—The life of rope as reported covers a range of from 7 or 9 months with a tonnage of 175,000 tons hoisted, up to a life of 6 years with 900,000 tons hoisted. The shortest life reported is from a 1,500-ft. vertical wet shaft in which the water is slightly acid. The rope is lubricated once a month by, being pulled through a box of dressing. The longest life reported is from a wet shaft in which the water is neither acid nor alkaline. The shaft is vertical, but has only a 300-ft. lift. The cable coating, which is put on with a brush, is applied only twice a year. From the data given it appears that the average life of a rope is about two years with a tonnage hoisted of 450,000 tons.

(11) Head Sheaves—The head sheaves vary from 6 to 12 ft. in diameter, being in all cases larger than the minimum diameter recommended by the manufacturers and well within the theoretical size necessary to keep the tensile stress within the elastic limit of the steel. The practice in regard to lining varies. Many Iron Range mines do not use wood lining, although the Copper Mining District in general lines the head sheaves, the angle sheaves and the pulley stand idlers with wood. Idlers vary from 10 to 24 in.; in one instance 5 ft. wood-lined idlers are used.

Ropes deteriorate from three causes: abrasion, over loading, and corrosion. Over loading or over straining may be caused by undue bending. Manufacturers stress all these points and point out many things to be avoided. One principal “don’t” is, “Don’t kink the rope in handling.” Sudden shocks may overstrain a rope. Lubrication is urged by all the manufacturers, but in view of the experience listed it would seem that under average conditions in the Lake Superior District lubrication does not add materially to the life of the rope in reasonably dry shafts where water is not corrosive.

The ideal method of fastening the rope to the skip is probably by the use of a socket in which the rope is fastened by zinc. This method is recommended by manufacturers and by the Bureau of Mines, (Bulletin No. 75); yet it is followed by only one of the mines reporting. Apparently, shackling with Crosby Clips has proved to be safe and convenient for Lake Superior conditions.

The generally higher hoisting speeds in the Copper Mining District would appear to justify the usually larger sheaves and drums used.

The following is a description of hoisting rope practice at the Copper Range mines:

Kind of Ropes Used—1¼-in. diameter 6 x 19 standard lay, hemp center, plow steel rope.

Local conditions under with ropes operate:

Shafts incline at 72 deg., 2,500 to 4,000 ft. deep.

Head sheaves 12 ft. in diameter, wood lined.

24-in. wood lined idler sheaves in shaft 100 ft. apart.

Pulley stands 60 to 100 ft. apart.

All pulley stand idler sheaves wood lined.

Hoisting engines located far enough from the shaft so that the arc of contact of the rope at head sheave is not over 90 deg.

Engine drums, Nordberg Conical, 14 and 18 ft. in diameter.

Hoisting speed approximately 2,000 ft. per min.

Weight of skips, 4 tons.

Net load, 5 tons.

Fastening—The rope is threaded through a thimble and ring, the free end being doubled back 4 ft. and shackled—4 shackle rings being used. Every three months the ropes are reshackled, that is, the 8 ft. of rope in the shackle is cut off and a new shackle is made.

Lubrication—Lubrication consists of applying, with a brush, a thin coat of a mixture of pine tar and cylinder stock as often as is necessary to keep the rope lubricated at all times. Once a week is generally sufficient.

The Copper Range mines are not confronted with any serious lubrication problem, for the shafts are quite dry and what little water does come in contact with the ropes does not contain acid or other particularly corrosive substance. In the history of the mines a rope has never been discarded for any reason other than that the crown wires have become so worn that the rope is under size and the crown wires break.

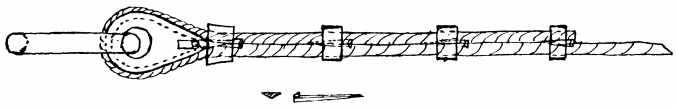

HOISTING ROPE SHACKLE IN USE AT COPPER RANGE MINES

Rope Inspections—The ropes in use are under daily observation, and once each month every rope is carefully examined from end to end, note being made of the diameter at each 500 ft., of the number of broken wires, and of the general condition. A record is also kept of its length of service. By interpreting these observations in the light of previous experience, the

mechanical department is able to accurately determine when a rope is so worn that it no longer offers the requisite factor of safety.

At about half the estimated life of a rope it is turned end for end in order to utilize the 300 to 500 ft. wound on the take-up drum that would not otherwise be used.

When a new rope is put on, a short piece of it is cut off and tested for its elongation and breaking strength. The test is made in a hydraulic testing machine, designed and built at the Copper Range shops. Likewise, when a rope is discarded, a piece is cut from the worst part and tested. The breaking strength of new ropes runs from 58 to 70 tons; that of the discarded ropes averages about 40 tons.

Life of Ropes—The period of service obtained from a rope varies with local conditions from 1½ to 2 years, during which time the skip end has traveled from 35 to 50 thousand miles and has hoisted from 50,000 to 200,000 tons of rock in addition to all the men and supplies incident to such production.

At six shafts of the Copper Range Consolidated Company a 25-year record has been kept of the history of each rope—the date it is put on, the date it is removed, and its condition. During this time the shafts have been extended from depths of 1,000 ft. to depths of over 3,000 ft.

It is regretted that records of tonnage hoisted per rope and of distance travelled have not been kept in more detail, but it seems certain that the life of a rope is roughly proportional to the ton mileage hoisted, other things being equal. But other things are never equal. The most consistently good record of the four Champion shafts is that of Shaft No. 1 where the average life of a rope for a period of over 20 years is more than 27 months; this average includes ropes injured in accidents. The longest life recorded is about 40 months. The average tonnage hoisted per rope over a 22-year period is about 190,000 tons.

The hoist at No. 1 Shaft has a double cone end drum with a small diameter of 13 ft. and a cylindrical diameter of 18 ft. 6 in. The hoist is so far from the turn sheaves that the fleet angle is small and there is very little abrasion of the rope on the grooves of the drum. The good record of the ropes in this shaft is ascribed to the large-diameter drum and the small fleet angle.

During the past 25 years the removal of ropes at the Copper Range mines has been due to worn crown wires, reduced diameter, and broken wires. It is concluded that fatigue of the metal of the rope, due to whipping of the ropes in the shaft, is the principal cause of deterioration, and that abrasion is the second most important cause. The Copper Range shafts are practically dry, however.

The writer wishes to gratefully acknowledge the assistance so generously given by the various operators in furnishing detailed information about rope handling practice.

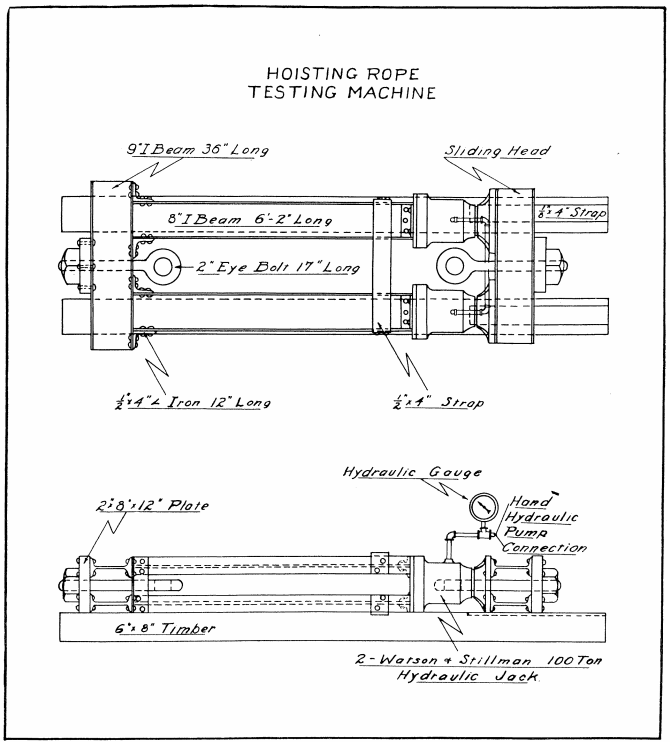

ACCIDENT PREVENTION WORK AT THE COPPER RANGE COMPANY MINES.

BY ALBERT MENDELSOHN, PAINESDALE, MICH.*

In July, 1927, an aggressive campaign against underground accidents was started at the Copper Range Company mines. Accident prevention work was made a matter of major importance and was stressed by all officials from the head of the company down; the methods used with notable success by companies in other districts were studied and those which seemed applicable at our mines were adopted and vigorously pursued. Perhaps very little we have done has been original. We are particularly indebted for some of our methods to the iron mines of the Lake Superior district, principally because these mines had good accident records and, being near by, could be visited and studied by us and our captains. Although our accident rate is still very high, we have accomplished enough in these two and a half years to give us assurance that the methods we are pursuing will reduce our accidents to a minimum. Our company was the first in the Copper Country to adopt such methods in the prevention of accidents, and enough has been accomplished to put at rest any lingering doubts we may have had as to their effectiveness in our copper mines. Our lost-time accidents for 1929 were, in number, 37.6 per cent of those that occurred in 1927, based on the same number of men employed. Lost time on account of accidents was reduced in about the same proportion.

*General Mine Superintendent, Copper Range Co.

Those who are familiar with our copper mines know that there are certain factors here making for danger which are difficult to alter or overcome. At the depths at which

we work we find the rock under stress; and even a small drift, apparently solid when opened, may suddenly spall without warning and slab off. As soon as a considerable area has been mined: out, there is a pressure of the country from the hanging toward the foot which, although it may result in a movement of only a few inches, causes pillars and stope backs to crush. Our airblasts, or rock bursts, are familiar to most mining engineers. Mines working on the retreat (longwall on the incline) just do their stoping on the border line between crushed ground and solid lode; mines working on the Baltic cut-and-fill method, stoping under long strips of floor pillars, are in an even worse predicament, for their men are more continuously exposed to the crushing backs. The rock is hard, the copper occurs in bunches, and in few of the mines can the miners drill to break the lode freely; consequently there is only a small production from each stope. To produce to shaft capacity, a great number of levels must be worked, a matter which presents difficulties in supervision and level maintenance. Thus the two factors which account for the most accidents in mines of nearly all districts—loose ground and haulage—become unusually difficult to combat in our copper mines. Our deep shafts are affected by the movement of the country, and large gangs of shaft timbermen must be employed continuously to repair and replace the squeezing timber. Consequently, there is much exposure to shaft accidents. There are other factors which present serious difficulties to an accident-prevention campaign, but I believe those enumerated are the most important.

At the Copper Range mines we first attacked the most serious problem, that of “loose” ground. We are at present changing our method of mining to a retreating method, using sub-levels with cut and fill in a way which should materially lessen the amount of loose ground and the danger therefrom. But at present nearly all our production comes from stopes worked by the inclined cut and fill method, with stoping going on at many points along the level. A level may have as many as six raises to the level above, at the bottom of each of which inclined stoping is taking place. The organization in these stopes prior to 1927 was purely functional—miners to break the rock, pickers to sort it, fillers to spread the filling material that was passed down the raises, and wallers to build up the ore passes before the fill was spread. Stope timber gangs were kept busy going from stope to stope putting up props to support loose ground where the miners, pickers, or fillers, etc., were at work. The principal objection to this organization from the standpoint of safety was that the stope timber gangs did not arrive in a stope as promptly or as often as they were needed. The first step, therefore, in our safety campaign was to change our stope organization. It was arranged that one miner and one laborer (called “miner’s helper”) should work together in each stope and that they should do all the work which was to be done in their stope: that they should mine, pick, fill, wall, and, especially, do their own propping. The stope timber gangs were maintained as before, but were used to timber the “heavy” stopes and to put in the more permanent props at the bottom of the slopes.

The miner and the helper, and their partners on the other shifts, are on contract. The contract is figured on two bases: first, on the total volume of rock broken, the rate varying with the width of the stope; and second, on the tons of copper rock produced, the rate varying with the per cent of barren rock that had to be sorted out and left in the stope as filling material. In addition to the bonus which the men in a stope may earn on this tonnage and discard basis, they can also earn a bonus for safe work and for care of loose. The pit-boss marks in his time-book the hours each man spends in barring or propping up loose or in doing any other strictly safety work. A bonus, varying with the ratio of the total time thus spent to total time worked for the month, is paid over and above any other day pay or bonus the man may receive. The rate of pay for tonnage and discard is nicely balanced against the rate of pay for care of loose in such a way that there is no advantage in neglecting one for the other. By this method we are able to work our most dangerous stopes in a proper, orderly, and safe way and, at the same time, to allow the men to earn a bonus for good work. The safety inspector visits each stope at least twice monthly and reports in writing to the captain and to the clerk’s office the condition of the stope on the day of inspection. If his report is unfavorable once, any bonus for safe work and care of loose is cut in half. If his report is unfavorable twice in one month, the men can receive no bonus for safe work for that month.

A survey of the mines indicated that there was considerable lack of uniformity between levels in tracking, chutes, tirnbering, etc., and also lack of uniformity between the stopes, even on the same level. A thorough clean-up of the mines was needed. It seemed desirable at the same time to establish standards of equipment and layout for all levels and stopes. Over two hundred such standards were decided on; they were set down in the form of a questionnaire for the use of the inspection committees. The inspection committee—composed of the safety inspector, a miner or laborer from the level to be inspected, and a pit-boss or shift boss who worked in another part of the mine—visits one level each week and fills in the questionnaire, indicating deviations from the standards, noting any unsafe practice, and making any recommendations which the members of the committee see fit. The questionnaire comes at once to the desk of the superintendent, the items calling for correction are marked by him, and a date is set, usually ten days later, for the second inspection. The questionnaire then goes to the captain. The safety inspector alone makes the second inspection. If some of the work called for has not been completed, the questionnaire again goes to the captain, with a date for the third inspection, usually one week after the second. If on the day of the third inspection any work called for is not completed, and if there is no satisfactory written reason given by the captain for not doing this work, all work stops on the level in question until the work called for has been

completed. Only in a small number of cases has a third inspection been necessary. The use of this detailed questionnaire accomplished quickly and satisfactorily both the clean-up needed and also the standardization desired in our levels and stopes.

In addition to the standards that were automatically set up by the use of the questionnaire, booklets were given to all bosses, motormen, and motormen helpers, stating in detail our standards for underground haulage. Similar booklets on the handling and use of explosives were given to the bosses and to all men in the mine who had been granted permission to use explosives. The lower levels of the Champion mine are being equipped in an entirely different manner from the upper levels, preparatory to the installation of the new method of mining; and a completely new-set of standards for tracking, wiring, dumping, etc., has been set up. These bottom levels are being laid out according to the best practice in matters of equipment, safety, sanitation, and efficiency. All machinery in the mine is inspected and reported on in writing at least every two weeks by the mechanical or electrical department. Underground sinking engines are inspected and reported on in writing daily by the pit-bosses in addition to the inspection by the mechanical department.

At the Champion mine one level has been placed in charge of experienced miners, called “instructor-bosses,” one on each shift, and all newly hired men who have not worked for us recently must go to “school” on this level for at least six days. The new man is reported on in writing by his boss each day for the first six clays, and each week thereafter for at least six weeks. By this means we more quickly find out the new man’s ability, see that he is given proper instruction in our safety practices and methods of work, and thus avoid some of the danger incident to placing green men in the mine.

Hard hats and goggles must be worn by all men in the mine. Goggles must be used, not only for certain specified jobs, such as sledging rock and starting holes, but also for any job where the eyes are in danger. Hard-toed shoes are not required, but as the company sells these to the men at cost, and as they are good shoes, we find that the men buy them in preference to the old mining boot. We have sold to date over three gross of these shoes. Gloves are handled in the same way; about six gross have already been sold. Eventually all men will be required to wear the hard-toe shoe and gloves. No smoking is allowed in the mines.

Every lost-time accident that occurs in the mine is investigated and reported on in writing by the safety inspector, who may call in the efficiency engineer and a boss from some other part of the mine to help him make his investigation. His report must try to fix the blame and must provide, if possible, a means of preventing the recurrence of such an accident. These reports are read and discussed at the bosses’ meetings, held every Wednesday afternoon.

Violators of the company safety rules or those indulging in any unsafe practices are reported in writing by the safety inspector, captains, shift bosses, or pit-bosses. Penalties for such violations, fixed by the captain, take the form of a three- or six-day lay off. Chronic offenders are discharged. Bosses have been given to understand simply and in no uncertain manner that their most important record is their accident record. A file is kept for each boss in which are placed, in addition to his lost-time accident record, all the reports he makes of rule violations by his men or of other unsafe practices. Reports made by the boss count in his favor. In his file are also placed all rule violations and unsafe practices in his department reported by the captain, shift boss, or safety inspector. These count against him. Continued neglect of dangerous conditions by a boss calls for a lay-off without pay, or discharge.

First-aid boxes are kept on each level in the mine and are being used intelligently by the men. In November and December, 1929, when the Bureau of Mines car visited the Copper Range mines, all the men (over 1,200) working underground in the Champion, Baltic, and Trimountain mines, took the full 10-hour course in first aid training; and each of our five operating shafts have received the 100 per cent first-aid certificate issued by the U. S. Bureau of Mines. The men took this training on their own time—an indication, we believe, of a growing esprit de corps so necessary to a successful accident-prevention campaign.

SCRAPING PRACTICE AT THE MONTREAL MINE.

BY D. E. FRITZ* AND L. E. DICK,** MONTREAL, WIS.

The scraper method of handling broken ore and rock has entirely displaced hand shoveling and hand tramming at Montreal. In the mining operation the ore is first scraped from the place where it was broken, to a raise in which it drops freely to the floor of the main level drift below. From this point it is scraped along a drift and up a slight incline, and then is dropped into a regular mine tram car.

The layout for sub-level scraping consists of double compartment raises about 75 ft. north of the footwall side of the ore body, and a connecting drift between raises at the sub-level elevation. Crosscuts are driven north and south from each raise, and the ore is mined back by the sub-level caving method. Eight-foot timber is used, and the bottom of the crosscut is floored with 2-in. hardwood planks. Water encountered in the ore body drains underneath the plank floor into a box from which it is piped to the main level. Two short rails are fastened over the top of the raise to prevent large chunks which must be broken with a hammer, from dropping through. Because the ore chunks are hard and abrasive, it is necessary to line the dirt compartment of each raise with 2-in. hardwood planks.

Considerable attention has been given to the safety of the operation. The men are not allowed either to ride the scraper or to be in the crosscut while the scraper is in

motion. The back of the crosscut, during driving, is forepoled and lagged after each blast before the mucking out of die ore or the hanging up of the block. Gloves must be worn by the men when handling the cable. Metal guards enclose the drums of all slusher hoists, and the frame of each hoist is grounded to prevent electric shocks.

*Efficiency Engineer, Montreal Mining Co.

**Assistant Superintendent, Montreal Mining Co.

Each gang of miners scraping on the sub-levels has the following slushing equipment:

Hoists—Fifteen horsepower double drum electric hoists are being standardized. These hoists weigh about 2,100 lb. and have a rope speed of about 200 ft. per minute. The alemite system of lubrication is used, and the hoists are given close inspection.

Scrapers—A 42-in. wide, hoe-type scraper with interchangeable tool steel cutting blades is usually used on the sub-levels because it handles chunky ore better than do other scrapers. However, a box-type scraper with a V-back is also used to some extent.

Cables—A ⅜-in., 6x19 plow steel cable with a steel wire center is used to pull the scraper on the sub-levels. Clamps or clips are not used, the end of the cable being merely tied to the scraper.

Blocks—A simple block with a 6-in. cast iron wheel and ¼-in. plate sides is used on the sub-levels. A plain bronze bushing is pressed in the wheel, and a machine bolt used as the pin. These blocks are frequently lost, so it is not advisable to use an expensive one.

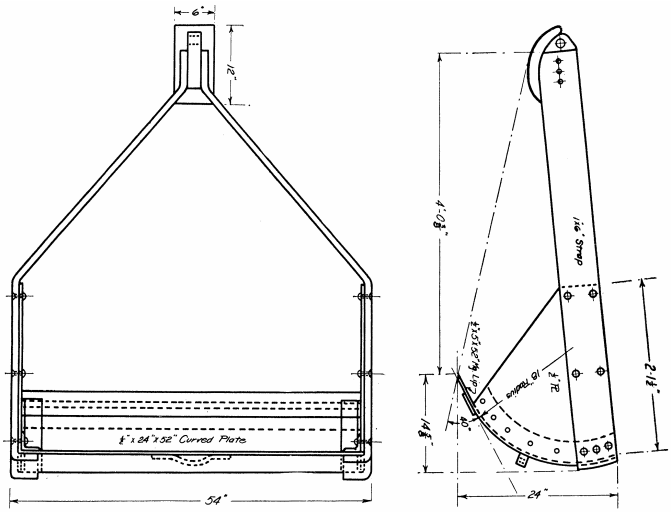

HOE TYPE ORE SCRAPER

Block Supports—The block is usually attached to an extension bar wedged between the cap of the last set and a hole in the breast. The extension bar is of the conventional design with a yoke on one end to fit against the cap. Where the ground is fairly hard, a hole is sometimes drilled in the breast and a wedge shaped eye bolt is placed in the hole with a second wedge-shaped piece driven in to make them both tight. If an eye bolt can be placed on each side of the breast, a chain is hung between them, permitting the block to be attached to the chain and to be moved to any position desired.

Lights—Each working place on the sub-levels has a, 50-watt lamp over the raise and a 50-ft double conductor tirex extension cord. The extension cord is fitted with a metal reflector and a 50-watt lamp.

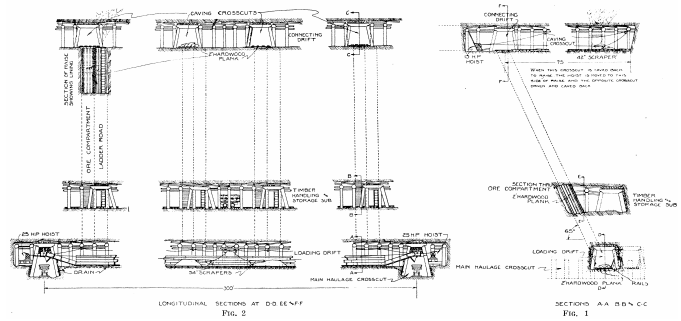

Power Transmission—Direct current power at 250 volts is used. A heavy rubber-covered two-conductor cable carries the current up to the sub-levels and along the connecting drift. Automatic circuit breakers on the main level protect the various sections of the mine from grounds and over loads. Safety switches in metal boxes are used to start and stop the hoist motors. These motors are thrown directly across the line. A separate switch is used for the lights.

The following tables show some of the results obtained scraping on the sub-levels. On account of its nature, the ore packs tightly after being blasted, particularly in caving or in pulling back a crosscut. The table shows that about one-third of the mucking time is devoted to getting the ore to run out into the crosscut where it can be scraped back to the raise. Chunky ore also slows up the scraping operation.

BREASTING (DRIVING CROSSCUT AHEAD)

18 Per Cent of Total Cycle Spent on Mucking Operation.

Description of Work—	Time—in Per Cent of Mucking Operation
Actual scraping	60
Picking pile	17
Moving and rigging blocks up and down	23
Total	100
Tons per hour—all mucking operation	27 tons

CAVING (PULLING CROSSCUT BACK)

70 Per Cent of Each Shift Spent on Mucking Operation.

Description of Work—	Time—in Per Cent of Mucking Operation
Actual scraping	47
Breaking chunks on grizzley	7
Running ore packed after blast	33
Rigging up and miscellaneous	13
Total	100
Tons per hour—all mucking operation	16 tons

The layout used in scraping ore into the cars on the main level consists of crosscuts, 300 ft. apart, through the ore body, and of drifts, 150 ft. apart. The drifts are 4 ft. higher than the crosscuts; consequently it is unnecessary to scrape up a steep incline in order to empty the scraper into a car. Both the crosscuts and

drifts are timbered with heavy 8-ft. saw-log timbers. Six 30-lb. rails are spiked on the bottom of each loading drift, and are run from one end of the drift to the other. The scraper rides on these rails. The space, both between the rails and half-way up the hanging side of the drift, is covered tightly with 2-in. hardwood planks. The raises from the sub-levels above open directly into the loading drift, and two scrapers pull the ore in opposite directions from the drift to the crosscuts. Room for the slusher hoist is cut out on the opposite side of the crosscut. The slide built up over the track in the crosscut is made of steel and is raised enough to permit trains to pass freely underneath. Adjacent loading drifts are so spaced that two cars of a train may be loaded at the same time.

The scraper hoists used in the main level loading drifts have 25-h.p. motors and are equipped with roller guides and guards. The motors are thrown directly across the line by means of knife blade safety switches, and use direct current at 250 volts.

A ⅝-in., 6x19 plow steel cable with steel wire center is used to pull a 54-in. hoe-type scraper, the maximum distance pulled being 170 ft. A 16-in. ball-bearing block is hung on a steel support fastened to two caps. The return cable is held up by idler pulleys hung from caps. The loading drift is electrically lighted. In spotting cars to be filled an air whistle is used to signal the motor man.

Cars are loaded on the main level with a scraper because the ore packs so tightly in raises that it cannot be drawn freely from a chute. The loading drift has the additional advantage of acting as a storage place for ore in case the tramming or hoisting is interrupted. The pile of ore at the bottom of each raise is spread along the drift with the scraper when there are no cars to be filled. “Chute accidents” and “runaways” have been eliminated and a saving in tramming labor has been effected.

When ore has been accumulated in the loading drift close to the slide, a train of cars is filled at the rate of one car each minute, including spotting time. If the ore has to be scraped from 150 to 170 ft., about 1½ minutes are required to fill a 40-cu. ft. car.

The mucking for the main level development work is all done with a scraper and a cantilever slide of the Osana type. In a slate rock drift, three men muck out a 16- to 18-car cut in three hours. These men do their own tramming, and the time includes moving the slide and rigging up and down.

A big car holding approximately 380 cu. ft. of broken rock is used to muck out the straight double track crosscuts at No. 5 shaft. An inclined slide is built on the front end of the car, and a 25-h.p. double drum hoist is mounted on the locomotive that moves the big car. The accompanying sketch shows the general layout. A 42-in. hoe-type scraper, weighing 800 lb., is used. The scraper is weighted so that it will dig into the rock chunks better. Five trips to the shaft are required to muck out a 7-ft. cut in a 9x14-ft. crosscut. The actual mucking time is about 3 hours. This equipment is only suitable for a straight crosscut or drift and for a distance of not more than 2,000 ft. from the shaft.

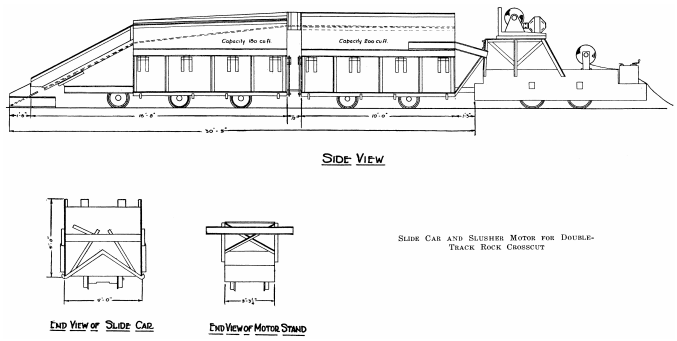

Slide Car and Slusher Motor for Double-Track Rock Crosscut

Scraping is not limited to the underground work at Montreal. Coal is scraped to the boiler house elevator, foundations are excavated, rock piles are leveled off, stockpile grounds are built, and gravel is loaded into trucks, all by means of scrapers.

The introduction of the scraper has eliminated hand shoveling, and has thus relieved the laborer of one of his most arduous tasks. In addition, it has reduced the cost of a number of expensive operations for the mine owner.

DEVELOPMENT OF COPPER SMELTING PRACTICE AT MICHIGAN SMELTER.

BY GEORGE P. SCHUBERT, HOUGHTON, MICH.*

In 1903 when the Paine and Stanton interests began their active campaign of developing mines on the South Range and in Keweenaw County, they realized the necessity of a common smelting plant to take care of their combined mineral output. They accordingly planned the erection of a plant embodying the best of the essential and established characteristics of native copper refineries, and added new and distinct features designed to eliminate much of the manual labor, among them suitable labor-saving machinery and an efficient arrangement of units.

Since this plant was to be called upon to handle a comparatively large tonnage of native copper concentrates, it was decided that the units should be correspondingly large. The principal objects were: to be able to operate on a large scale, to use as much mechanical equipment as was feasible, to reduce the smelting costs and treatment losses, and finally to turn out a first-class product of refined copper.

Up to this time the Lake Superior refineries, which were receiving the purest native copper concentrates or “mineral” had earned an enviable reputation for a high grade “Lake Copper” which for many years sold at a premium above the “Electrolytic” refinery product. With this standard to be maintained and with a mineral containing more than the usual amount of arsenic for the Michigan Copper Mines, special attention had to be given to the elimination of the arsenic and to maintaining that high standard.

Ground was broken in July 1903 on a site chosen because of the natural advantages of hillside location, the accessibility to rail and lake transportation, and the ample water supply from Cole's Creek. The original plan embodied completely automatic receiving and drying equipment which subsequently proved unnecessary and was soon discontinued, the mineral thereafter being stored wet as received from the stamp mills. The mineral from the several contributing mines is now received in special sealed hopper bottomed steel cars having a capacity of about 50 tons. As received, it is weighed, sampled, and then stored in one of the ten 150-ton capacity steel mineral bins until it is needed for the purpose of being charged into the melting furnaces.

*Superintendent, Michigan Smelter.

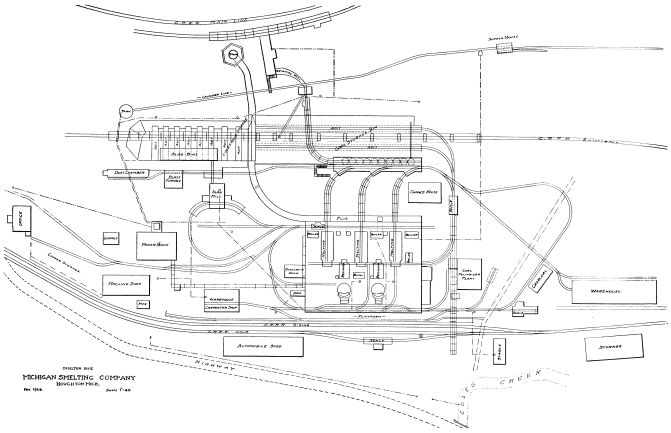

Mass copper from the mines and stamp mills, received on flat cars, weighed, sampled, and then stored, was formerly charged into the blast furnace for smelting and treatment. After considerable pilot experimentation in the laboratory and with the furnaces, it was finally decided to smelt in the melting furnaces all the mass copper and all the slag which had to be retreated, thereby completely eliminating the Blast Furnace and its costly and complicated operation. Metallurgically and financially this proved to be a master step in the history of Lake Superior smelting practice, and since 1922 all Lake Superior refineries have adopted this method of treatment.

Coal, coke, limestone and iron ore were received by rail and stored in a series of bins and storage spaces where there was ample storage for winter use. The sidehill location proved to be an admirable choice because of the relative ease with which all of the materials could be handled as needed. It also proved an excellent location for the underground flue which with its surmounting stack gives a natural draft of 220 feet.

The water supply from Cole's Creek has at all times been adequate and a great natural advantage.

Storage capacities are as follows:

	Tons
Mineral bins	1,500
Coal bins	12,000
Limestone	2,000
Coke	600
Iron ore	1,000
Slag (assorted)	2,000

The reverberatory melting furnaces, three in number, were built on an elevation of 30 ft. above the lake level, so that the resulting molten unrefined metal could be transferred by launder direct into their companion refining furnaces, located at a lower level. (See plant layout.) This arrangement was somewhat new to the district and, after the usual number of trials and experiments with some revisions, proved to be a practical and economical method of procedure, and as a result, it is now being followed by all Lake Superior refineries.

The original furnaces were built with sand bottoms. These gave considerable trouble because of the fact that the furnaces were driven hard to reduce the accumulated stock of mineral. Silica brick bottoms were tried next. These brick bottoms were supported on 2½-in. cast iron table plates which were in turn supported by a series of brick pillars about 3 ft. high. The lower tie rods were between these pillars but below the cast iron tables. However, expansion soon so distorted the cast iron bottom and so racked the pillars that it became dangerous to depend upon them, and the intervening space between pillars was filled with brick and stone work.

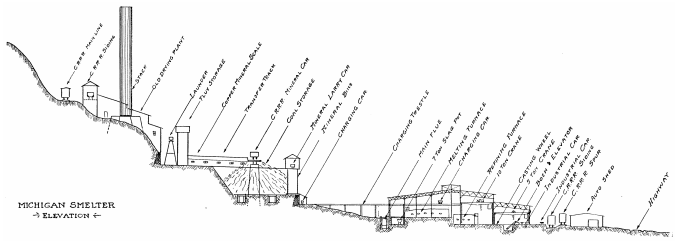

Later, as the heat penetrated into the bottom, the tie rods burned off, and the brick bottoms became very troublesome and were finally replaced with sand bottoms. These sand bottoms have proved to be quite satisfactory, and no radical departure from this practice was made until 1928-9 when the No. 3, melting furnace was completely rebuilt, 32 in. of silica brick being used for bottoms, and other new features being added which will be described later.

Early in the history of the plant a combined melting and refining furnace, furnace No. 6, was erected and operated for several months. The experience gained with this unit verified the belief that the companion melting and refining furnace idea was a distinct improvement on the older process in which the mineral was melted and refined in the same vessel.

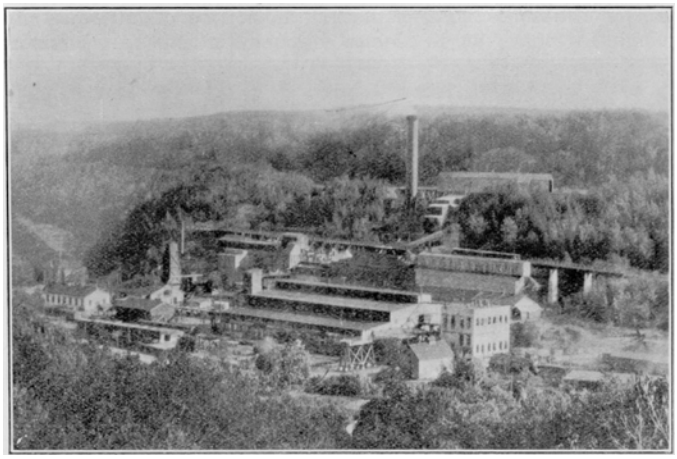

THE MICHIGAN SMELTER IN 1929

FEATURES AS DEVELOPED AT MICHIGAN SMELTER.

1904—Large 16 x 35-ft. Melting Furnaces built to plan and later revised. (New No. 3 rebuilt in 1928, 18 x 60 ft.)
1904—Smelting and refining done in separate furnaces.
1904—First "Walker" Casting Wheel in district.
1904—Mineral transported to smelter from mill in 50 ton railroad cars instead of in barrels.
1904—Utilization of waste heat in Stirling boilers.
1904—General use of copper moulds for casting.
1905—Introduction of water-cooled charge hole jackets of copper.
1916—Large scale soda treatment for reduction and control of arsenic content in Range and Mohawk copper.
1917—Installation of first Uniflow poppet valve engine.
1918—Plant for making tri-calcium arsenate insecticide as a by-product from the process of recovering the copper oxide from the soda slags. Discontinued 1926.
1921—First pulverized coal plant in district.
1922—Smelting 60 per cent of all mass in melting furnaces.
1922—Introduction of 7-ton slag pots to aid in recovery of "skimmed shot" copper.
1922—Elimination of blast furnace. (Former use was to smelt reverberatory slag and mass copper in the blast furnace, and to turn out "Cupola" blocks of black copper which was then refined in regular refining furnace.)
1927—Use of dead burned dolomite for refining furnace bottoms. Under normal working conditions all steam for power and heat is derived from waste heat and no coal is burned direct for these purposes.

SAMPLING AND STORING MINERAL—PRESENT PRACTICE.

The several kinds of mineral as received from the stamp mills in 50-ton hopper bottomed steel cars are unloaded into a 15-ton larry car which is then accurately weighed. Then a prescribed amount of coal and limestone flux is placed in a separate compartment of the same car, and as the mineral is being discharged into one of the 150-ton storage bins, samples are taken at short intervals from the flowing stream of mineral. About 100 lb. of sample is taken from every larry car, so that in all the sample from every 50-ton car weighs about 300 lb. When the unloading of the 50-ton car has been completed, the composite sample is mixed, coned, quartered, etc., and a sample weighing about 30 lb. is sent immediately to the laboratory for moisture and copper analysis. At the same time a portion of the sample is put aside in a separate container, so that a composite sample of all grades of mineral received may be obtained at the end of the month, at which time this composite undergoes the usual mixing, coning, quartering, etc., and an analysis is made for the purpose of checking the totals and averages of the daily samples.

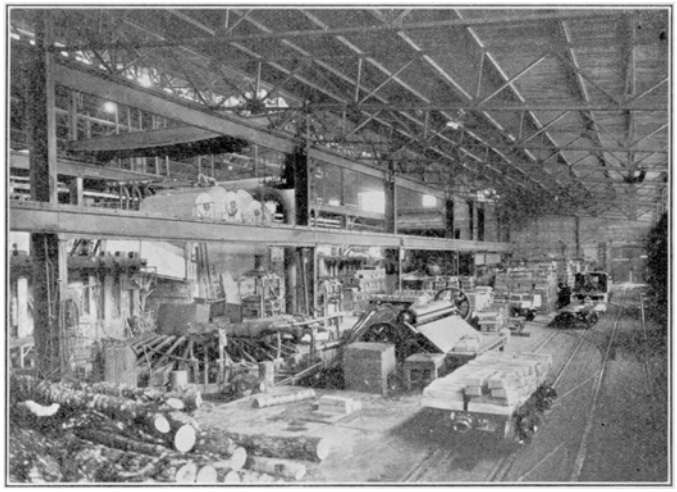

MICHIGAN SMELTING CO.—NORTH BAY OF REVERBERATORY BUILDING

MIXING WITH FLUXES.

Simultaneously with the unloading of the mineral from its compartment of the larry car, the coal and limestone fluxes are emptied into the 150-ton vertical cylindrical storage bins so that they may become well mixed with the mineral. When drawn into the charging cars below the mixing is more complete, and finally when the hopper bottomed charging cars are emptied through the charge holes along the center line of the melting furnace, there is still another opportunity for the mineral to become intimately mixed with the flux and any crushed slag that is being returned for re-treatment.

SAMPLING MASS AND BARREL WORK.

A considerable part of the material to be smelted is received direct from the mines and from the mill before it has undergone more than the ordinary mine crushing treatment. This material is known as "mass" when it comes from the mine and as "barrel work" if it comes from the mill, the only difference being that "barrel work" or "mill mass" consists of the smaller pieces which pass through the jaw crushers at the mine, but not being detected there, are picked out of the feed as it passes into the stamphead at the mill.

This material "mass," as received on flat cars, is weighed on a railroad track scale; the weight so obtained is used only as a check against the final weight, made on the regular copper weighing scales after unloading. The contents of the car is loaded by hand on "skips" or open ended steel baskets of about 5 tons capacity. Two such skips rest crosswise on one of the industrial cars. After being carefully weighed, these skips are drawn into the reverberatory building where a ten-ton crane lifts them, one at a time, and deposits them in a steel tank which is

completely filled with water. (About one-third of each railroad car of mass is used for this specific gravity determination.) As the skip and its load is completely submerged, the displaced water is all carefully conducted to a small weighing tank, and when the surface of the water has subsided to the same level as was maintained just at the time of immersion, the weight of the displaced water is taken.

EXAMPLE.

Let Sp. G. of copper be known, say— 9
Let Sp. G. of gangue be known, say— 3
Let Sp. G. of mass be known, say— 6
Let weight of mass in air be known, say—400 lbs.
Let X equal the weight of copper in mass.
Let Y equal the weight of gangue in mass.

$$\text{Then} \qquad \text{Volume} = \frac{\text{Wt.}}{\text{Sp. G.}}$$

$$X+Y = 400 \text{ ..... or .....} Y = 400-X$$

$$\frac{X}{9}+\frac{Y}{3} = \frac{400}{6} \text{ or .....} X = 300 \text{ lb. or weight of copper in mass.}$$

In connection with the foregoing method of determining the amount of copper in "mass" it must be understood that all possible precautions are taken to avoid error because of temperature variations, and that the specific gravities of water, copper and gangue are determined with great care and at frequent intervals.

WEIGHING MATERIALS.

Much care and attention must necessarily be given to the process of weighing all material received, especially the mineral coming in from the different mines and the refined copper ready for shipment. Scales of the highest type, kept in first-class condition and tested at frequent intervals, are used. A test weight car weighing about the same as an average lot to be weighed, is kept on hand and used to check the accuracy of the scale every day. This test weight is locked and sealed and kept under close supervision.

PULVERIZED COAL SYSTEM.

The Holbeck system of pulverized coal firing has been in use since the fall of 1921. This is of the circulating type, with a centralized pulverizing plant, storage bin, and the piping necessary to convey the coal and primary air to any of the five furnaces and to return the unused portion to the general storage bin.

Raw coal, usually a low ash, low sulphur mine run coal, is received at the pulverizing plant in 5-ton hopper bottomed industrial cars. The coal passes through a crushing roll to egg size, passes over a magnetic separator which removes the tramp iron, and is then fed through a Ruggles-Coles rotary dryer, similar to a cement kiln, and is finally fed by screw conveyor into a Bonnot pulverizer mill. Pulverization is carried on till 95 per cent passes through a 100 mesh sieve. The separation or classification is affected by air suction which carries the pulverized coal to the 50-ton capacity storage bin.

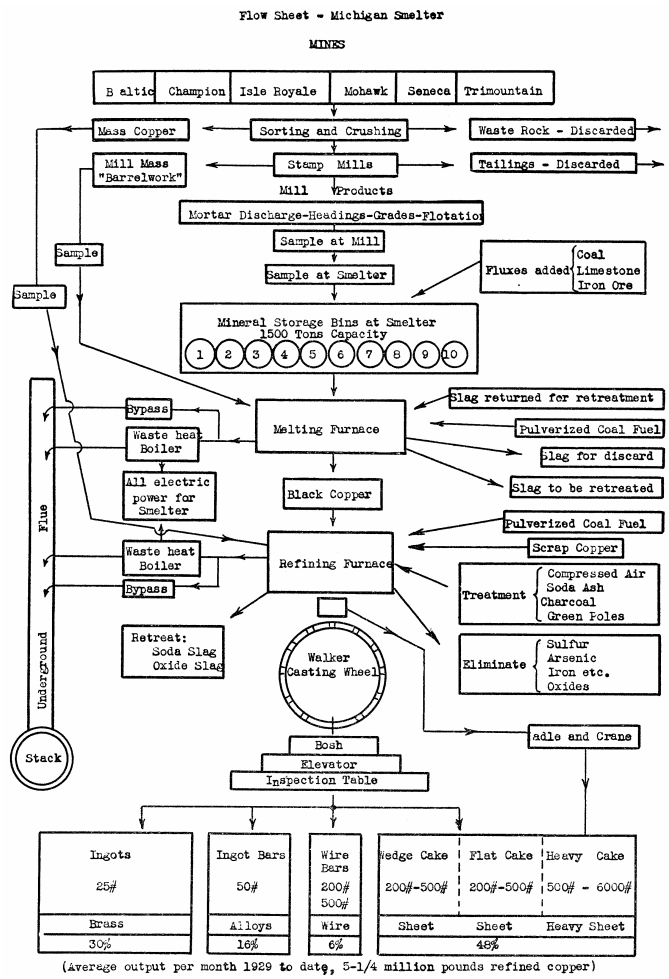

Regulated speed, motor-driven feed screws draw the pulverized coal from the hopper bottomed storage bin and discharge it into the intake of a 75-h.p. fan, where it is thoroughly mixed with the primary air and is then sent on its way through 15-in. pipe to the several furnaces in the reverberatory building. Any unused portion of the mixture is returned to the pulverizing plant where it passes through a cyclone separator which deposits the coal in the storage bin, while the air is recirculated with a new supply of coal supplied by the feed screws.

The designers of this plant were particular to have every unit in the system operate under a negative pressure, which eliminates the possibility of the escape of dust and the usual hazard so often present wherever there is a quantity of fine dust. The secondary air supply is added at each individual burner just before the mixture is blown into the furnace where it ignites.

CHARGING MINERAL INTO FURNACES.

Immediately after the tapping of the contents of the melting furnace out through a side tap hole and launder into the companion refining furnace, the tap hole is built up or closed with a mixture of fire clay, sand and coal, and the charging for a new cycle of operation is begun.

Stored mineral in the form of "grades" and "headings," together with their fluxes (crushed coal and crushed limestone and iron ore), are drawn into industrial hopper bottomed cars, which in turn are discharged through six water cooled cast-copper charge hole jackets, located at intervals along the center line of the melting furnace roof.

NOTES:—Barrel work or mill mass is charged through a larger charging hole located nearest the burners.
About once in every six days the charging is delayed long enough to open all side doors, to inspect the furnace roof, sides and bottom, to supply the necessary lake sand fettling, and to "close up," raise the heat, and "burn in" the new sand welts and bottom.

The conical piles of mineral are replenished at intervals until the total charge to be smelted during the 24-hour period has been fed in and the piles have been allowed to subside and finally "come up clean" from the bottom.

The completion of this phase of the smelting operation manifests itself by the cession of "boiling," and the bottom feels clear or "clean" when sounded with an iron bar.

In the meantime, and at proper intervals, the resulting slag is allowed to flow through the front skimming door into seven-ton slag pots. Any shot copper rabbled or skimmed off during this process has an opportunity to settle out in the bottom of the pot since the slag remains liquid for about three hours. When cool, the slag is dumped and is later broken in order that possible "buttons" of copper may be examined and recovered.

The program covering a 24-hour period for a pair of companion furnaces is about as follows:

In Total Elapsed Time.

Operation	Melting Furnace	Refining Furnace
Charging (at intervals)	Mineral, fluxes and slag ..... 2 hr.	Scrap and mass ..... ½ hr.
Melting down	18 "	From .....3 to 7½ "
Skimming (in batches)	3 "	2 "
Poling and rabbling	0 "	From .....5 to 9 "
Casting	Tapping out .....½ "	From .....4 to 9 "
Average total charge	Melted .....180 tons	Cast .....300,000 lb.

Detail of Furnace Log.

Melting Furnace		Casting Furnace (Regular Treatment)		Casting Furnace (Soda Treatment)	
Time	Operation	Time	Operation	Time	Operation
P.M.		P.M.		P.M.	
* 9:00	Tap out.	9:00	Tap in from melting furnace	9:00	Tap in from melting furnace
9:30	Build up tap-hole.	9:30	Finish tapping in. Moderate heat.	9:30	Finish tapping in.
9:45	Begin charging 12 cars. Full heat on at all times.	11:00	Skim 20,000 lb. slag.	10:00	Skim.
				12:00	Rabble with air. Add first soda, about 5,400 lb.

Melting Furnace		Casting Furnace (Regular Treatment)		Casting Furnace (Soda Treatment)	
A.M.		A.M.		A.M.	
1:30	Charge 3 or 4 cars.	1:00	Skim 2,000 lb. slag. Begin rabbling.	2:00	Finish skim first soda. Begin rabbling.
5:00	Skim about 30,000 lb.	3:00	Finish rabbling.	3:30	Finish rabbling. Begin poling.
5:30	Charge 3 or 4 cars. Charge 3 or 4 skips mass and barrel work.	3:00	Begin skim.	5:00	Finish poling. Add second soda, about 5,400 lb. Skim off soda slag.
9:00	Skim 30,000 lb.	6:00	Begin poling.	8:00	Finish skimming. Clean. Begin poling.
9:30	Charge 2 or 3 cars.	9:00	Begin tapping. Begin casting.	10:00	Finish poling. Tap.
P.M.		P.M.		10:20	Begin casting.
1:00	Skim 15,000 lb.	2:30 to 5:00	Finish casting. Sand or fettle. Charge scrap. Charge mass. Build up tap-hole. Begin melting.	P.M.	
4.00	Charge is flat.	8:30	Finish melting.	3:00 to 6:00	Finish casting. Sand or fettle. Cool furnace or charge mass, scrap. Apply full heat.
5.00	Boiling.	9:00	Receive tap. Repeat.	9:00	Receive next tap from melting furnace.
8:30	Boiling ceases	**			
9:00	Tap out and repeat.				

NOTES:

* Once a week, open all side doors, inspect sides, roof and bridge, and then repair or fettle. Close up for heat and resultant burning in of fettling material which has been added, and proceed as usual except when much low copper content material and slag are to be resmelted, in such case the cycle is extended to 48 hours.

** Whenever feasable, usually on Saturday night, the furnace is allowed to cool somewhat to harden the bottom, or to heat and "burn in" the repair material, in case it has been necessary to add considerable fettling materials.
Proportion of slag to be resmelted, richness of mineral, amount of mass, and several other factors tend to produce wide variations from a fixed schedule. The tapping and charging time however are usually limited within an hour.

Casting Copper Into Commercial Shapes.

As the molten copper is tapped from the casting furnace it drops into a launder and thence into a suspended ladle having from one to eight lips. The ladle is intermittently tilted by hydraulic pressure to discharge or "pour" the molten copper into the solid copper moulds suspended by trunnions from the arms of the Walker Casting Wheel.

As the moulds are filled the ladle regains its horizontal position and is refilled while the next set of moulds is revolved into place. As soon as the copper has set, water in quantities is brought to play on and under the moulds, and at the end of a half revolution of the casting wheel the mould is upset, thereby dropping the casting's into the body of water contained in the "bosh." From the bosh they are elevated by chain conveyor, dumped out on the inspection table, and finally loaded on industrial cars for stamping and weighing; then they are either stored or shipped.

While it is generally conceded that copper should be cast at a temperature of about 2,100 deg. F., there are many factors other than the actual pouring temperature which play important parts and have direct bearing on whether the resulting copper has the proper oxygen content and whether it has suitable top and side surfaces to be rolled into sheet or drawn into wire that will be free from defects.

Covering the molten copper with charcoal in the casting ladle, speed of pouring, regulation of casting wheel speed, temperature of moulds, shape of mould, cooling of moulds with water, and last but not least, the kind of mould wash and manner of application—all have a vital importance. In addition, any lack of diligence or

vigilance in any one operation will result in a product that is unsuited for use. It is here that a high degree of training among the workmen is most essential, and constant care must be exercised to maintain the proper balance and coordination.

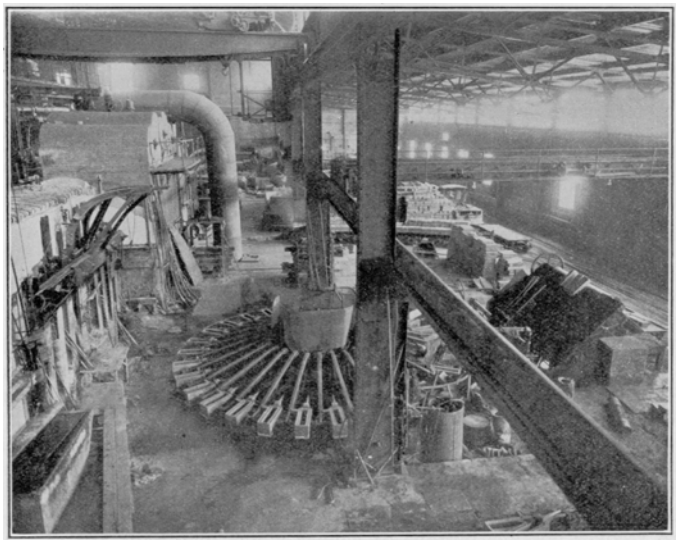

MICHIGAN SMELTING CO.—NO. 2 CASTING FURNACE, CASTING WHEEL, BOSH AND CONVEYOR

Various mould washes are used. For ingot casting a crude soap solution is used, while for wedge cake and other shapes, bone ash or bone black are used, but in any case, the manner of application is most important.

The casting ladle is arranged with a skimming bridge to prevent the charcoal covering from overflowing into the mould.

The burning of the moulds by the impinging stream of copper is avoided by the swinging of the ladle.

While standardization has been given much attention in nearly all industry, it still remains a fact that the rolling mills require a wide variety of sizes and shapes. It is necessary, then, to carry a stock of moulds extensive enough to make no less than 46 different shapes and sizes which in turn may be further varied by being cast to any thickness required, so that it might be said that there are more than 100 shapes and sizes available.

RETREATMENT OF SLAGS.

All slag resulting from the melting of large mass copper in the refining furnace and from the normal "rabbling off" (oxidizing) of the crude copper, is crushed and recharged into the melting furnace, together with mineral, flux and other materials to be smelted.

All soda slag (excess sodium carbonate+copper oxide+sodium arsenate+sodium silicate+silica) is crushed and resmelted, and in this second cycle much of the arsenic is removed from the circuit.

Any slag which does not flow freely from the melting furnace and which has to be rabbled or skimmed off is generally returned for retreatment. All other slag from the melting furnace is allowed to stand in large seven-ton pots till set, and then is broken to recover possible buttons of copper which may have settled out. Copper actually lost in the smelting operations is largely in the form of silicates and not easily recoverable.

MAKING LARGE CAKES OF COPPER.

Excellent results have been attained in the pouring of large cakes of refined copper weighing from 600 to 6,500 lb. each. Obviously, these large sizes cannot be made in the usual manner on the casting wheel, so special methods are used.

The moulds are prepared by having a series of solid copper bottom plates about 60 x 64 in. and 10 in. thick. These bottoms are cast about a network or coil of 1½-in. wrought iron pipe, which acts first as a preheater, using live steam to warm the "bottom," and later as a cooler with cold water passing through the same coil so as to avoid overheating the bottom during the casting period and to accelerate the setting of the copper. The top surface of the "bottom" is either planed level or hammered with a pneumatic hammer to make a perfectly smooth surface.

Next, a cast iron rim or "ell" is laid on the copper "bottom" and any crevices or cracks between the two are sealed with asbestos fibre. The inside of the "ell" is coated with mould wash, usually bone ash, all loose material and dust are removed by a compressed air jet, and the mould is ready to receive the molten copper.

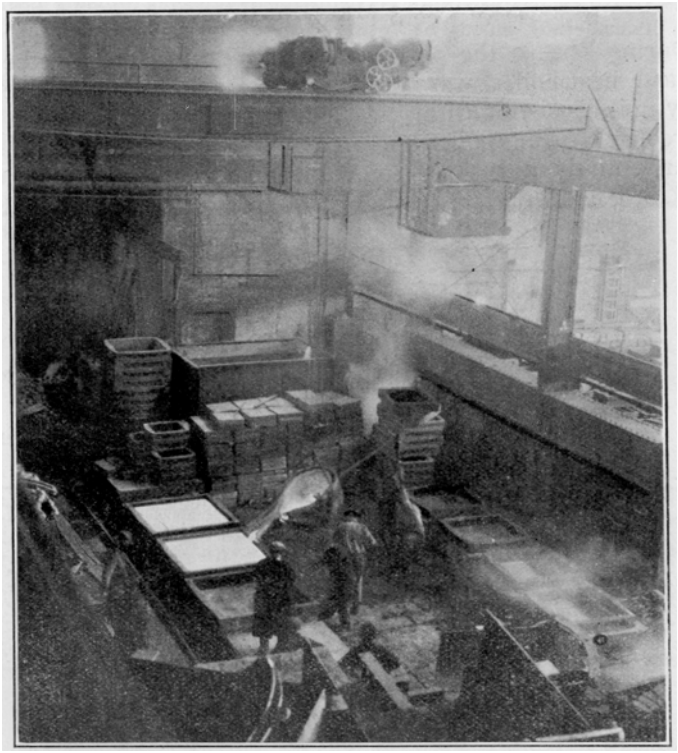

MICHIGAN SMELTING CO.-—POURING 6,000-LB. COPPER CAKE

Refined copper is tapped from the refining furnace into a large single lipped ladle suspended from one of the ten-ton traveling cranes. When full of molten copper, it is transferred and poured rapidly into the open mould, and, before the copper has had time to set, the splashes and

side shot are removed and any other foreign matter floating on the surface is “fished” out. As soon as the copper has set, a second crane removes the ell, cools it by plunging it in a tank of water, and deposits it on a clean bottom; then the hot cake is picked off from the bottom and piled to one side to cool.

Next day when all cakes are cool they are carefully inspected and all “cold sets,” “shots” and other imperfections are chipped out with a pneumatic gouge. The cakes are then brushed clean, weighed, marked and shipped.

New No. 3 Melting Furnace.

During 1928-9 the old No, 3 melting furnace, together with its waste heat boiler, was completely dismantled and replaced with a new unit consisting of an 18 x 60 ft. melting furnace and a 300 h.p. rebuilt Stirling boiler.

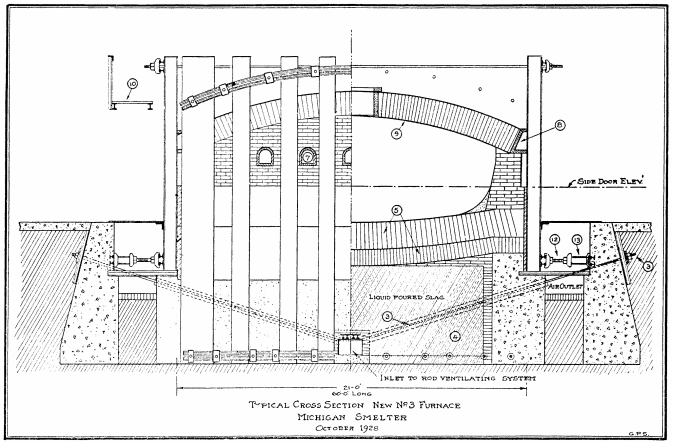

An entirely new setting for the boiler and a foundation for the furnace were constructed. New flues and other features new to the plant were introduced, most of which were based on experience with other parts of the plant.

The several features may be enumerated as follows:

1—Reinforced concrete boiler foundation with large refractory lined ash pits.
2—Overhead flue connection from boiler to main flue.
3—Air cooled tie rods imbedded in lower layers of foundation. (Cooled by natural draft.)
4—Solid cast slag sub-foundation.
5—12 and 20-in. silica brick bottom. Wedge shaped silica brick laid in bond and afterwards filled with “lake” sand.
6—Special shapes and manner of laying brick eliminated the usual groined arch construction for side tap holes.
7—Five pulverized coal burners. Water cooled fire openings.
8—Water cooled skew back plates.
9—Wedge brick roof of silica. Bonded but with expansion joints.
10—Permanent steel grating service platform alongside furnace and level with charge holes and upper tie rods.
11—Water cooled suspended damper to control by-pass. Boiler damper is in downtake and is not subject to great heat.
12—Lower ends of buckstays controlled by and adjusted with jack-screws. Jack thrust is against special reinforced thrust walls which are in turn held together with the imbedded air cooled cross tie rods.
13—Safety crushing unit to protect jack-screws.

This furnace has been completed for some time, but will not be put into commission until the present furnace fails, or until there is a decided change in the plant output.

Some of the features mentioned may be noted on the accompanying sketch.

THE SENSITIVITY OF THE DIP NEEDLE.

BY C. O. SWANSON, HOUGHTON, MICH.*

Introduction.

The clip needle is an instrument which measures variations in the inclination and intensity of the earth’s magnetic field. Its usefulness in tracing buried magnetic formations has been amply shown, especially in the Lake Superior Region, and the instrument has received careful consideration by many workers in this field. Probably the best treatment from the viewpoint of the field geologist is the article on magnetic observations by Hotchkiss[1].

The particular subject which will be treated in this paper is the variation in the sensitivity of the dip needle with changes in the magnetic field. The importance of this variation was strongly impressed upon the writer by recent work for the Michigan Geological Survey in the Marquette District, which led to a somewhat more complete analysis of the sensitivity than that given by Hotchkiss, and to the application of the results to field problems. From a practical standpoint, the investigation gives a method of adjusting the dip needle so as to make it most sensitive for the particular field under observation, and explains certain peculiarities of the instrument which have puzzled the writer and others of his acquaintance, and which have led to erroneous interpretations of magnetic data in certain cases.

*Professor of Geology, Michigan College of Mining and Technology.

(1) Bull. XLIV, Wisconsin Geol. & Nat. History Survey, pp. 75-136, 1915.

The Dip Needle and Its Operation.

The common Gurley dip needle has a flat magnetized needle into which is screwed a steel pivot pointed at both ends, the axis of the pivot passing through the center of gravity of the needle, and being normal to the plane of the needle. The pivot is supported by cup jewels, so that the needle is free to swing in any desired plane, depending on the position in which the instrument is held. A weight on the south end of the needle is used to counteract the tendency of the north end to dip down.

As ordinarily operated, the needle is first allowed to swing free in a horizontal plane, whereby the magnetic meridian is determined. The needle is then clamped, and the instrument is so held that, on releasing, the needle can rotate in the vertical plane of the magnetic meridian. The position of the needle is then read in degrees from the horizontal, which is called the clip reading, and is positive if the north end of the needle is down.

Calculation of the Dip Reading.

The position that the free needle with a fixed counterweight will take in the plane of the magnetic meridian is determined by the inclination and intensity of the magnetic field. Thus in Fig. 1, let the counterweight M exert a vertical force mi at a distance l from the pivot, and let the magnetic field of inclination 60 deg. exert a pull equivalent to a force m acting through P at a distance l from the pivot. Then the needle's position of rest will be at a reading of -15 deg. with the gravitative and magnetic moments each equal to m.l.cos 15 deg. If the inclination of the earth's field became greater, the reading would likewise increase (with due regard to sign), or if its intensity became greater, the reading would also increase.

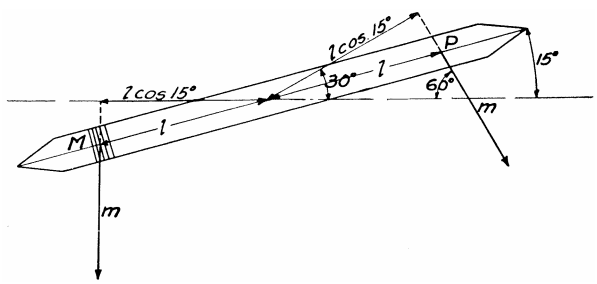

Fig. 1

If another instrument with a counterweight of different mass or position were used, a new series of readings would result, which would not parallel the first set. A comparison of the two sets of readings would show the relative sensitivities of the two instruments under these conditions. Accordingly, the first step in determining such sensitivities is the calculation of the readings that would be obtained with needles counterbalanced in various ways in different magnetic fields,

Such a calculation is very easily made graphically, as is explained in the following. The gravitative moment of a given counterweight in a certain position on the needle is clearly dependent only on the reading of the needle. If the counterweight exerts a force m at a distance l from the pivot, the gravitative moment is m.l.cosX, where X is the dip reading, plus or minus. It is a maximum of ml, which may be called unity, when the reading is 0 deg., and is zero when the reading is 90 or -90 deg. Its values for all positions are shown by the curve ABC, Fig. 2. The magnetic moment in a field of given intensity and inclination is likewise dependent only on the position of the needle. If the field has an inclination of 60 deg., it is maximum when the needle reads -30 deg., and is zero at readings of 60 or -120 deg. If its maximum moment is ml, or 1.0 unit, the magnetic moments for various reading's may he plotted as curve DEF. The two curves intersect at a reading of -15 deg., which is the position of rest of the needle under the conditions postulated. At smaller readings, the magnetic moment is larger and tends to increase the reading, and at larger readings, the gravitative moment is larger and tends to reduce the reading. Consequently, if released from 0 deg., the needle will swing about the point -15 deg. The two curves could be continued to intersect again at a reading of 175 deg., which would thus be shown to be a second balanced position for the needle. However, this point is of no significance, because when the needle swings slightly from it, the moments tend to swing it through 180 deg. to the balanced position at -15 deg.

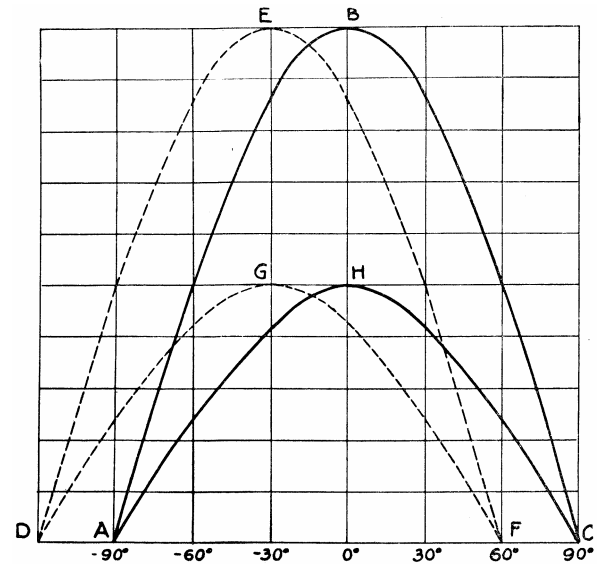

Fig. 2

If the intensity of the field be reduced to one-half, while its inclination remains the same, the maximum magnetic moment becomes 0.5 unit at a reading of -30 deg., and may be plotted for various readings by the curve DGF. The balanced position of the needle would then be at a reading of -66 deg., where the curves ABC and DGF intersect. Similarly, plotting curves for various intensities will give the corresponding readings of the dip needle.

If the maximum gravitative moment be halved by shifting the counterweight on the needle or by substituting a counterweight of different mass, the gravitative moments for various readings can be shown by the curve AHC. It will be noted that halving both the magnetic intensity and the mass of the counterweight does not change the reading for the balanced needle. In other words, it is the ratio of the maximum magnetic moment to the maximum gravitative moment that determines the reading, and not the absolute value of either. With this relation in mind, the intersection of DEF and ABC can be said to give the reading when this ratio is 1.0; and the intersection of DGF with ABC, the reading when the ratio is 0.5. Thus, by using ABC and a series of curves similar to DEF, the readings may be obtained for any variation in the intensity of the magnetic field or in the counterbalancing moment.

If the inclination of the magnetic field were increased to 70 deg., the maximum magnetic moment would be exerted when the needle reads -20 deg. To take care of the variations in the ratio between the maximum moments in such a field, a series of curves similar to DEF could be constructed with their highest points at a reading of -20 deg. Since this involves merely a lateral shift in the curves, tracing these curves on a sheet of

transparent paper, so that they can be moved laterally as much as desired, will take care of any change in the inclination of the field.

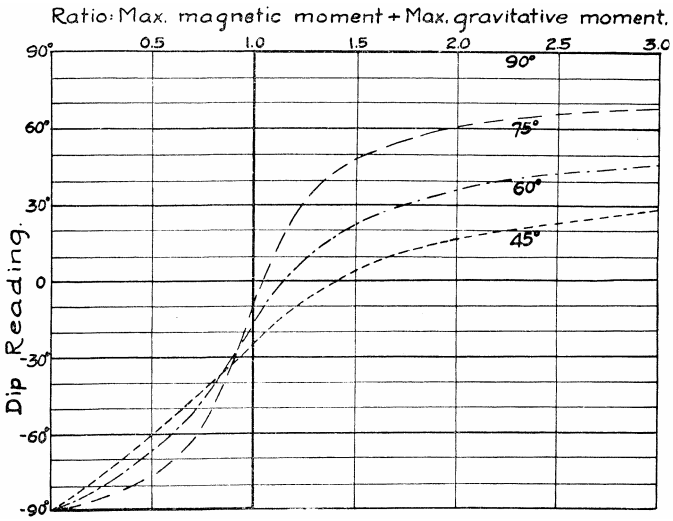

FIG. 3

The construction, then, of curve ABC and of a series of curves similar to DEF enables one to determine very quickly and easily what the readings of various dip needles will be in fields of any inclination or intensity.

Fig. 3, which is similar to the diagram given by Hotchkiss, shows the results of calculations made in this manner for fields of inclinations 45, 60, 75, and 90 deg., and for ratios of the maximum magnetic moment to the maximum gravitative moment in the range 0.0 to 3.0. As an illustration of the use of this diagram, to obtain the reading for the case shown by Fig. 1, where the ratio is 1.0 and the inclination 60 deg., the ratio line 1.0 is followed down the page to its intersection with the curve marked 60 deg., whence, by following a line across the page, the reading of -15 deg. is obtained.

Two important features of this diagram are to be noted here. The first is the flattening and spreading of the curves to the right, where the ratio of the maximum magnetic moment to the maximum gravitative moment is large. This means that a lightly counterbalanced needle in a strong field is sensitive mainly to changes in the inclination of the field. Or, since the curves rise gradually to the right, it can be said that a high-reading needle is sensitive mainly to differences in inclination of the field. Clearly, counter-weighting such a needle more heavily will increase its general sensitivity. The second feature of importance is the crossing of the curves near the ratio 1.0. To the right of the crossing an increase of inclination works with an increase of intensity to increase the reading, whereas, to the left, the two factors oppose one another. Now magnetic fields differ in the way these two factors vary, and in tracing a field, the general objective is to follow the zone of sharpest change in the field. If then, in a given field, the most marked change involves an increase in both the intensity and declination, or a decrease in both these factors, the needle should be so balanced as to have the ratio of the maximum magnetic moment to the maximum gravitative moment from 1.0 to 1.5. If, on the other hand, the most marked change involves a decrease in one factor and an increase in the other, the needle should be so balanced as to have a ratio of 0.5 to 1.0.

On the following pages, a practical application of the above principles will be given to illustrate their usefulness in field work.

APPLICATION OF THE PRINCIPLES.

The following example gives an analysis of the magnetic field over the magnetite-grunerite phase of the Negaunee iron formation in section 23, township 47 N, range 28 W, of the Marquette District of Michigan. The outcrop is buried under about 200 ft. of surface material, and the formation dips approximately 60 deg. north.

Fig. 4 shows the character of the magnetic field as determined from a series of readings taken at intervals for a mile across it. South is to the right side of the diagram, and the buried outcrop of the iron formation is about ⅛ mile wide and just to the right of the center of the diagram. The inclination was taken with a clip needle from which the counterweight had been removed, and the variations in intensity, which are quite marked, were roughly measured by noting how near a magnet must be brought to the needle to cause a certain deflection.

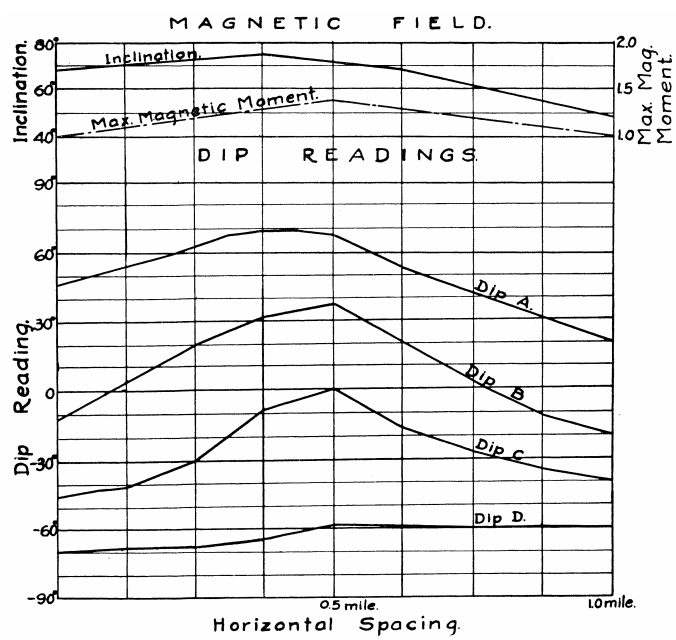

FIG. 4

The lower part of Fig. 4 shows the calculated dip readings that would be obtained with four dip needles having various counterweights. Dip A has a maximum gravitative moment of 0.5, measured in the same units as those which indicate the maximum magnetic moments (which vary from 1.0 to 1.4), or, in other words,

the needle is working in a ratio range of 2.0 to 2.8. Under such conditions, the highest readings occur where the field is most steeply inclined. Dip B, with a ratio range of 1.0 to 1.4, shows the increased influence of the intensity of the field, and Dip C, with a ratio range of 0.7 to 1.1 shows this influence yet more marked. Dip D with a ratio range of 0.5 to 0.7, shows the effects of having changes in the factors of intensity and inclination opposing one another.

It is clear that Dips C and D are best adapted for tracing a magnetic field such as the one shown, as the profiles of the dip readings show sharp crests. Dip A, giving a profile with a broad crest, would require the running of much longer lines across the belt, and Dip D would be practically useless. The maximum sensitivity, which is shown by Dip C, is due to the fact that the greatest ratio of the maximum magnetic moment to the maximum gravitative moment for this instrument is 1.1, which is just to the right of the region where the curves in Fig. 3 cross. Until this ratio is nearly reached, the increase of inclination tends to reduce the reading, and thus the profile of the readings of Dip C does not show the swell to the left of its crest, but is, on the contrary, depressed in this portion.

This analysis was used in the field by adjusting the counterweight of a dip needle so that it read 0-30 deg. as a maximum when readings were taken across the magnetic field. This instrument was then used to trace the formation, which it did very satisfactorily, whereas a dip needle adjusted so as to read 0 deg, in a normal area, which is the adjustment ordinarily made, gave readings such as those shown by Dip A, and was not satisfactory.

Besides illustrating a method of adjusting a dip needle in order to make it most sensitive for a given magnetic field, this analysis brings out a few general features of dip needle readings which are of interest.

1. The profiles show that a properly adjusted dip needle can be used to magnify considerably the variations in the inclination and intensity of a magnetic field. This fact, together with the rapidity and ease with which the readings can be taken, accounts for the great value of the instrument in regions where moderate magnetic variations are present.

2. The fact that the upper profiles are steeper on the right, and the lower ones on the left, shows that the asymmetry of a profile does not necessarily indicate the dip of the magnetic formation.

3. Lack of variation in the readings does not necessarily indicate lack of variation in the magnetic field. This fact is very important, both in obtaining and in interpreting dip needle data.

4. Dip needles not only may vary in their sensitivity, but may show different positions for the crest of a magnetic field. In other words, one instrument may give a reading higher at A than at B, and another a reading higher at B than at A. Plotting “magnetic lines” from the crests of profiles taken with different instruments is therefore liable to error. As will be shown in the next section of this paper, the mere fact that the reading of one dip needle coincides with that of another for certain points does not necessarily mean that both show the crest in the same place.

The Effects of Abnormally Counterweighting the Needle.

A normal dip needle, well-constructed, should have the following characteristics: the line joining the points of the supporting pivot, should pass through the center of gravity of the needle; the points of the needle, its center of gravity, and its magnetic poles should be in a line; and the center of gravity of the counterweight should he on this line. The most common variations from such construction and their effects on the sensitivity of the instrument will now be discussed.

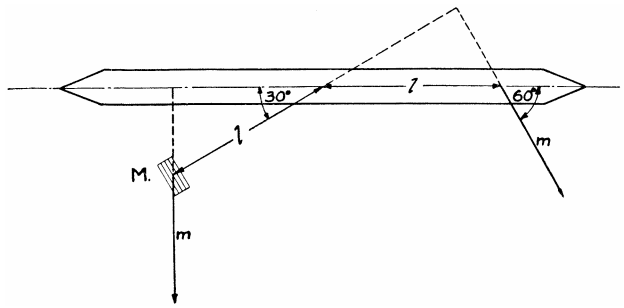

Fig. 5

Fig 5 shows an abnormal counterweighting, in which the counterweight is entirely off the needle. The maximum gravitative moment would be exerted when the needle reads 30 deg. To calculate the readings that would be obtained with such an instrument in various fields, it is necessary only to shift curve ABC of Fig. 2 so that its crest is at a reading of 30 deg. Or, it may be noted that in a field of a given intensity and inclination the reading is 30 deg. more than that of a normally balanced needle with the same maximum gravitative moment in a field of the same intensity but of 30 deg. less inclination. In general, the sensitivity of instruments having their maximum gravitative moments at readings of 30, 20, 10,-10, -20, -30 deg, are the same as those of normally balanced needles; in fields of 30, 20, and 10 deg. less, and 10, 20, and 30 deg. more inclination, respectively.

Fig. 6 shows the profiles of dip readings that would be obtained with various instruments across the field indicated at the top of the diagram. The profiles are designated: 0.8 (-10 deg.) for an instrument having a maximum gravitative moment of 0.8 unit at a reading of -10 deg.; 0.8 (0 deg.), for an instrument having a maximum gravitative moment of 0.8 unit at a reading of 0 deg, (normally counterweighted) ; etc. These profiles serve also as additional illustrations of the points made at the end of the preceding section of this paper. The greater sensitivity of the instruments having maximum gravitative moments at readings of -10 deg. is easily explained by reference to Fig. 3. Their sensitivity is the same as that of normal instruments working in a field olio

deg. greater inclination, and Fig 3 shows that, in a ratio range of 0.8 to 1.5, (the conditions illustrated by Fig 6), the sensitivity of normal instruments increases with increased inclination of the field.

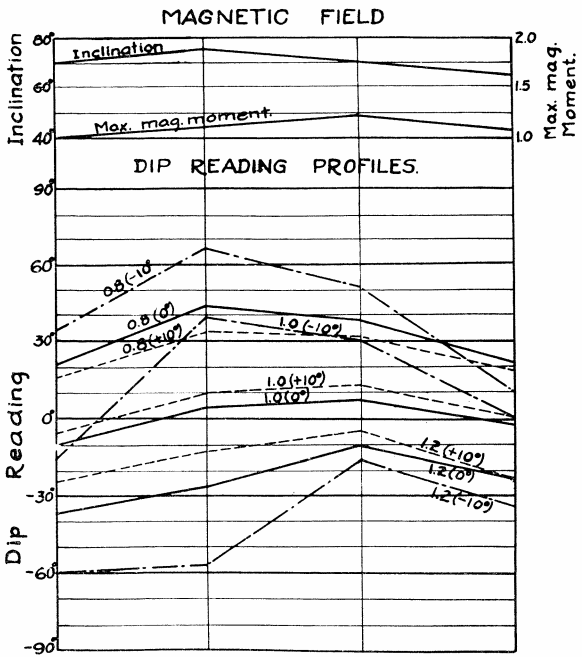

FIG. 6

Now, since the counterweight is always on the needle in ordinary instruments, it might be thought that this discussion has little bearing on the subject at hand. However, equivalent abnormal balancing of the ordinary instrument may result from various irregularities in its construction, of which the following are known to he common. The line joining the pivot points may not pass through the center of gravity of the needle, and thus the weight of the needle itself acts as a counterweight having its maximum gravitative moment at a reading which depends on how far the pivot is screwed in. Consequently, if the reading of an instrument varies as the pivot is turned, such a condition of balance is shown. The condition may be due to a crooked pivot, or to the fact that the points on the pivot are eccentric with respect to the axis of the threaded portion. The latter cause is quite common. The pivots are manufactured with the points in the axis of the threaded portion, but in the field they are often resharpened in lathes which grasp the unthreaded portion. Accordingly, if the axis of the threaded portion does not coincide with that of the unthreaded portion, a condition which is not at all uncommon, eccentricity of the points is produced by the resharpening. Another irregularity of construction, of which I have been informed by Mr. H. R. Aldrich of the Wisconsin Survey, is found where the line joining the poles of the needle is at an angle to the line joining its points. This irregularity may be detected by noting whether the reading of the needle changes when it is turned over.

For various reasons, then, a condition equivalent to having the counterweight off the needle may exist. When the tendency toward this condition is slight, it is of little consequence, except to modify the sensitivity and action of the instrument as described below. The general fact that such modifications are common, however, must not be overlooked in interpreting and correlating dip needle data.

If the tendency is for the maximum gravitative moment to be exerted at positive readings, the instrument, as compared with a normal one, is less sensitive, has a greater sensitivity range, and has a faster swinging needle. The first two characteristics are readily apparent from a comparison of the curves shown in Fig 3, the curves for less inclination showing less sensitivity and greater sensitivity range than those for greater inclination. The last characteristic can be explained by reference to Fig. 2. Having the maximum gravitative moment at positive readings shifts curve ABC to the right, or increases the distance BE and the area of DEF uncovered by ABC. The difference in the two moments for a random position of the needle is thus increased, and consequently the free needle is swung toward the points of balance more rapidly. Where a large sensitivity range and a “fast clip” are desired, such a tendency is therefore an advantage rather than otherwise, as long as the sensitivity of the instrument is satisfactory.

Conversely, when the maximum gravitative moment is exerted at negative readings, the instrument, as compared with a normal one, is more sensitive, has a smaller sensitivity range, and has a more slowly swinging needle. The decrease in the moment difference tending to swing the needle toward the point of balance may cause it to be too small to easily overcome friction, and may result in a “sticky” and uncertain action of the needle. The writer’s experience is that the ordinary instrument becomes too sluggish under such conditions in a weak field where the increased sensitivity would be desirable, and that in a strong field, sensitivity range must not be sacrificed to increased sensitivity, so that, in general, the tendency for the maximum gravitative moment to be exerted at negative readings is undesirable.

Marked abnormalities of the kinds just described clearly make an instrument unfit for use. In such cases the fault usually lies with the pivot, which may be replaced, turned, or resharpened to remove the trouble.

CONCLUSION.

Magnetic information obtained with the dip needle has proven very useful as a guide in working out buried structures. For example, where the readings are contoured on a map, a formation boundary may follow a certain contour. For such purposes, it is clearly desirable to obtain the most precise data possible and to correlate the readings properly. It is hoped that the analysis given in this paper may be of assistance to those working with the dip needle in the field, and perhaps may give new encouragement to some who have tried the instrument and found it apparently unsatisfactory.