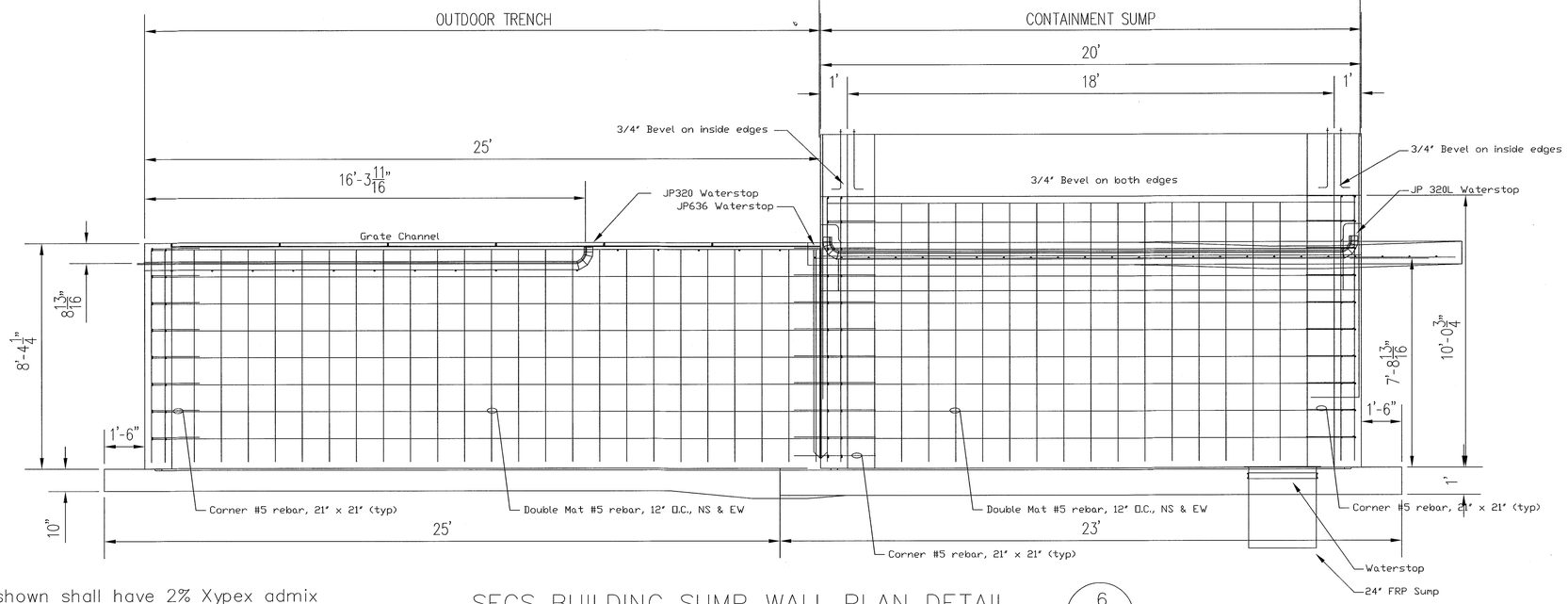

Notes

1) All concrete shown shall have 2% Xypex admix added to the batch

SECS BUILDING SUMP WALL PLAN DETAIL (6 / C-9)

Scale: 1" = 3'-0"

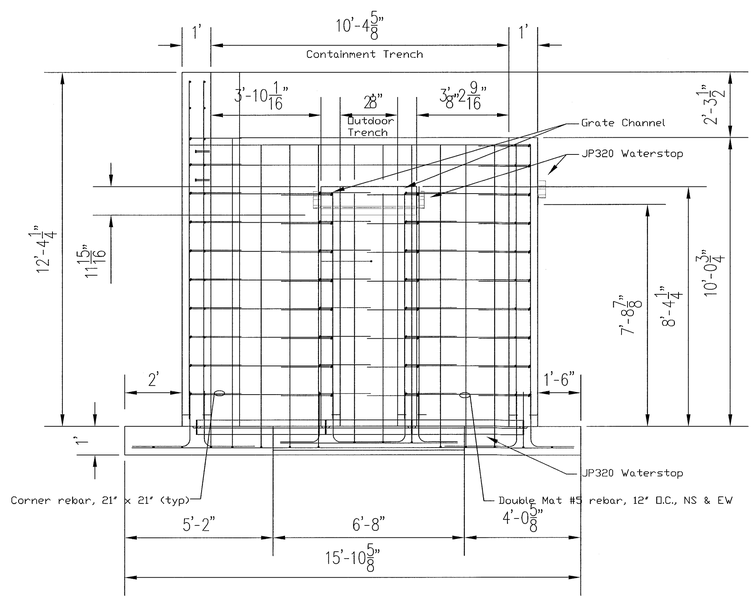

Notes

1) All concrete shown shall have 2% Xypex admix added to the batch

SECS BUILDING SUMP WALL ELEVATION DETAIL—West (7 / C-9)

Scale: 1" = 3'-0"

STATE OF MICHIGAN
MICHAEL A OLSON
ENGINEER
No. 34978
LICENSED PROFESSIONAL ENGINEER
12/01/17

us ecology

MICHIGAN DISPOSAL WASTE TREATMENT PLANT
SECS BUILDING
SUMP WALL CONCRETE DETAILS

C8