Proposed Approach to Addressing the Volatilization to Indoor Air Pathway

Matthew Williams
Vapor Intrusion Specialist
DEQ, RRD/Superfund
williamsm13@michigan.gov

MECC 2016

What will be covered

- How we got here
- Proposed Rule 7
- Proposed Rule 27
- Emerging Issues

Long trip…

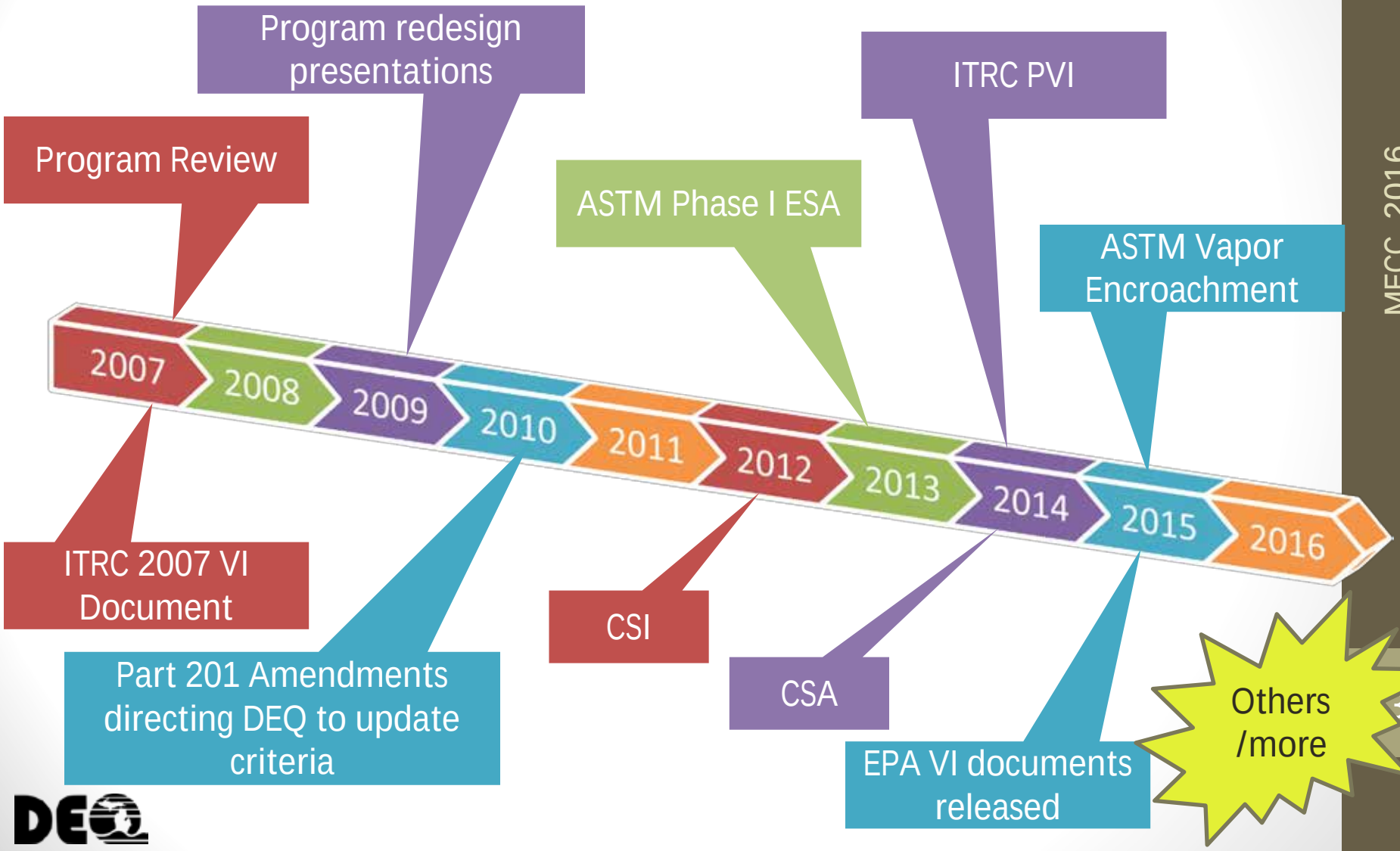
Program redesign presentations
ITRC PVI
Program Review
ASTM Phase I ESA
ASTM Vapor Encroachment
2007
2008
2009
2010
2011
2012
2013
2014
2015
2016
ITRC 2007 VI Document
Part 201 Amendments directing DEQ to update criteria
CSI
CSA
EPA VI documents released
Others /more

Rule 7

- Facility-specific inputs to develop generic criteria
- Allows for consistent use of soil-type assumptions
  - C_{sat}
  - Soil-Water Partitioning Values
  - Volatile Soil Inhalation and Particulate Soil Inhalation Criteria.
  - Volatilization to Indoor Air Criteria
- Michigan soil type used

USDA Soil Classifications

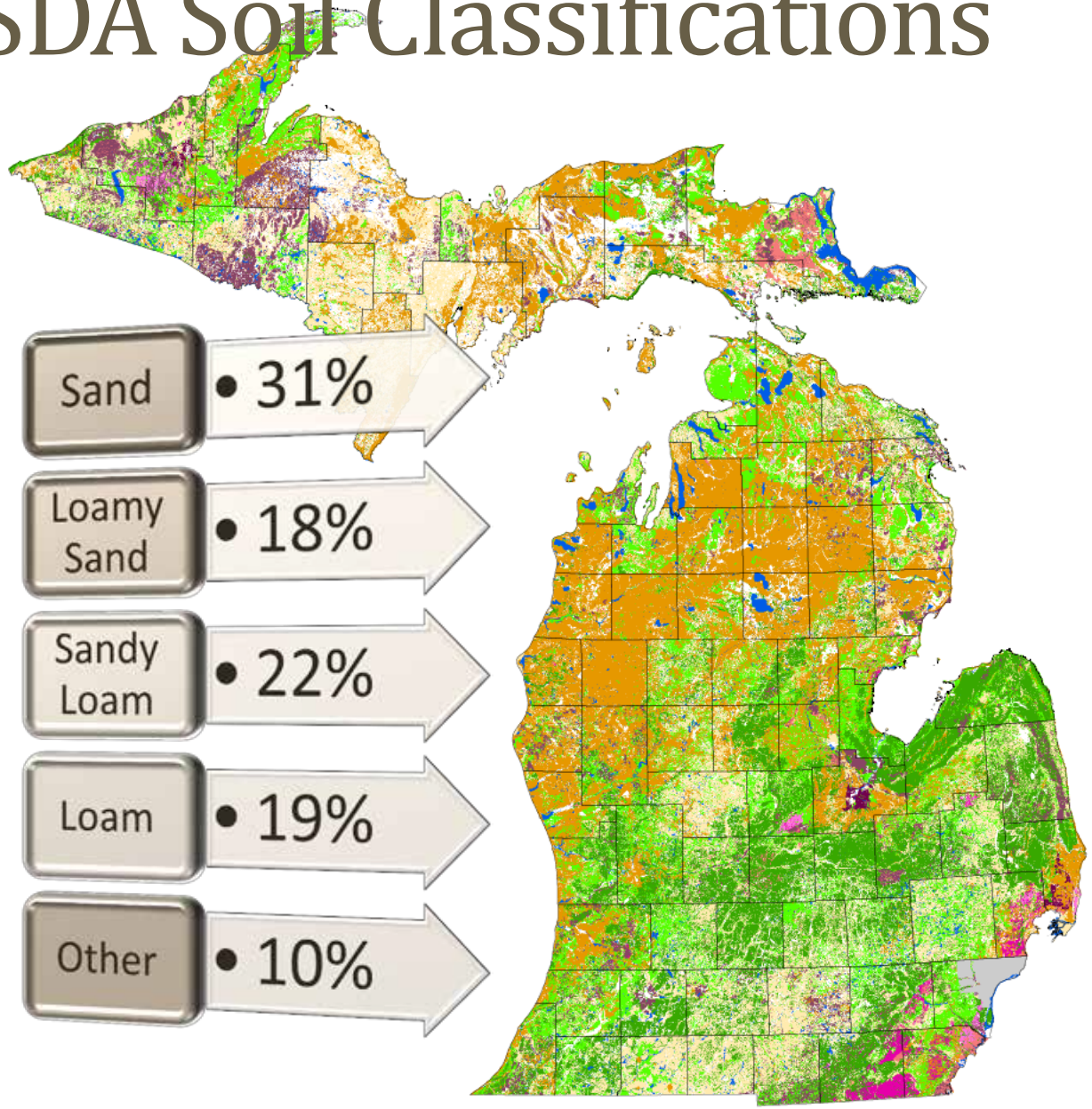

Soil Parameters

TABLE 2.

Generic Input Values for USDA Soil Conservation Service Soil Textural Classifications

Soil Texture (USDA)	Soil Texture Abbreviation (USDA)	Soil Total Porosity[A,B] n (cm^3/cm^3)	Saturated Water Content[A,C] θ_s (cm^3/cm^3)	Residual Water Content[A,B] θ_r (cm^3/cm^3)	Soil Water-Filled Porosity[A] θ_w (cm^3/cm^3)	Soil Air-Filled Porosity[A,D] θ_a (cm^3/cm^3)	van Genuchten parameters[A,B]			Mean Particle Diameter[A,E] (cm)	Dry Bulk Density[A,E] ρ_b (g/cm^3)	Saturated Hydraulic Conductivity[A] K_s (cm/h)
							α_1 (1/cm)	N	M			
Clay	C	0.459	0.459	0.098	0.215	0.244	0.01496	1.253	0.2019	0.0092	1.43	0.61
Clay loam	CL	0.442	0.442	0.079	0.168	0.274	0.01581	1.416	0.2938	0.016	1.48	0.34
Loam	L	0.399	0.399	0.061	0.148	0.251	0.01112	1.472	0.3207	0.02	1.59	0.5
Loamy sand	LS	0.39	0.39	0.049	0.076	0.314	0.03475	1.746	0.4273	0.04	1.62	4.38
Silt	SI	0.489	0.489	0.05	0.167	0.322	0.00658	1.679	0.4044	0.0046	1.35	1.82
Silty loam	SIL	0.439	0.439	0.065	0.18	0.259	0.00506	1.663	0.3987	0.011	1.49	0.76
Silty clay	SIC	0.481	0.481	0.111	0.216	0.265	0.01622	1.321	0.243	0.0039	1.38	0.4
Silty clay loam	SICL	0.482	0.482	0.09	0.198	0.284	0.00839	1.521	0.3425	0.0056	1.63	0.46
Sand	S	0.375	0.375	0.053	0.054	0.321	0.03524	3.177	0.6852	0.044	1.66	26.78
Sandy clay	SC	0.385	0.385	0.117	0.197	0.188	0.03342	1.208	0.1722	0.025	1.63	0.47
Sandy clay loam	SCL	0.384	0.384	0.063	0.146	0.238	0.02109	1.33	0.2481	0.029	1.63	0.55
Sandy loam	SL	0.387	0.387	0.039	0.103	0.284	0.02667	1.449	0.3099	0.03	1.62	1.6

A - From USEPA, 2004. User's Guide for Evaluating Subsurface Vapor Intrusion into Buildings. United States Environmental Protection Agency, Office of Emergency and Remedial Response. February 22, 2004.

B - Hers, I. June 3, 2002 Technical Memorandum to Debbie Newberry, USEPA OSW. Input Parameters for OSWER Wide Guidance for Vapor Intrusion Pathway.

C - Saturated water content is assumed to be equal to the water soil total porosity because the saturated water between drainage and wetting conditions varies but is always less than the fully saturated water content which is equal to the soil total porosity.

D - The air-filled porosity is calculated as the total porosity minus soil water-filled porosity.

E - Nielson, K. K., and V. C. Rogers. 1990. Radon transport properties of soil classes for estimating indoor radon entry. In: F. T. Cross (ed), Proceedings of the 29th Hanford Symposium of Health and the Environment. Indoor Radon and Lung Cancer: Reality or Myth? Part 1. Battelle Press, Richland, Washington.

USDA Soil Classification

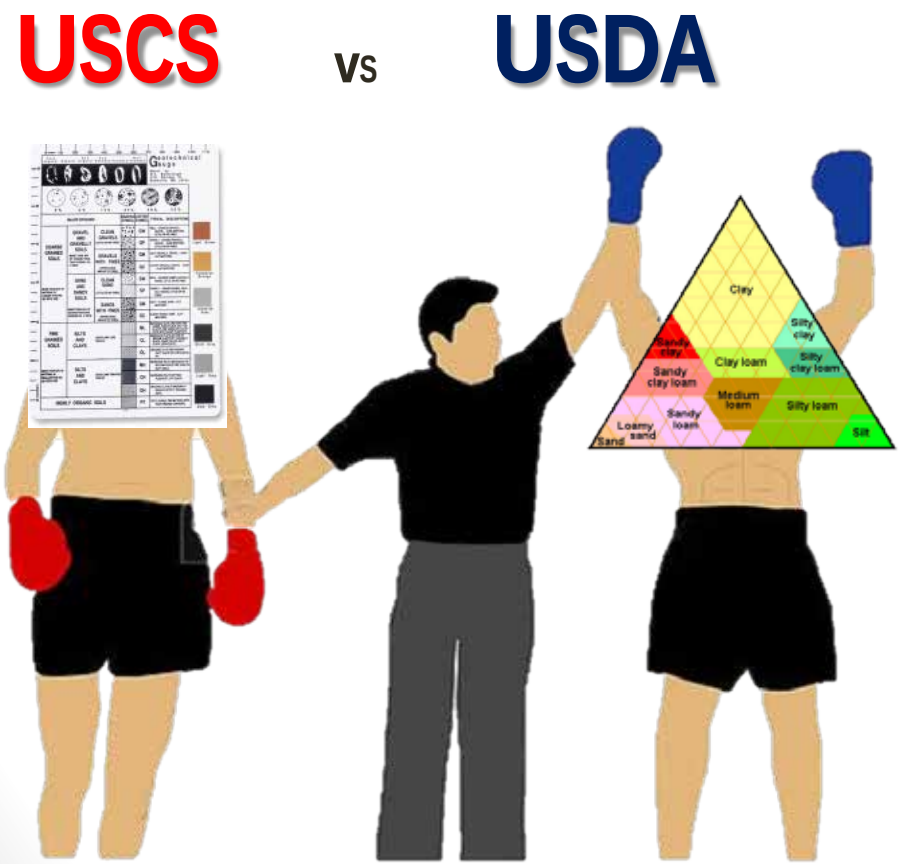

- 12 soil types
  - Some do not occur
  - Not USCS
- Modifications based on:
  - Field examination
  - Lab analysis
- USDA Web Soil Survey

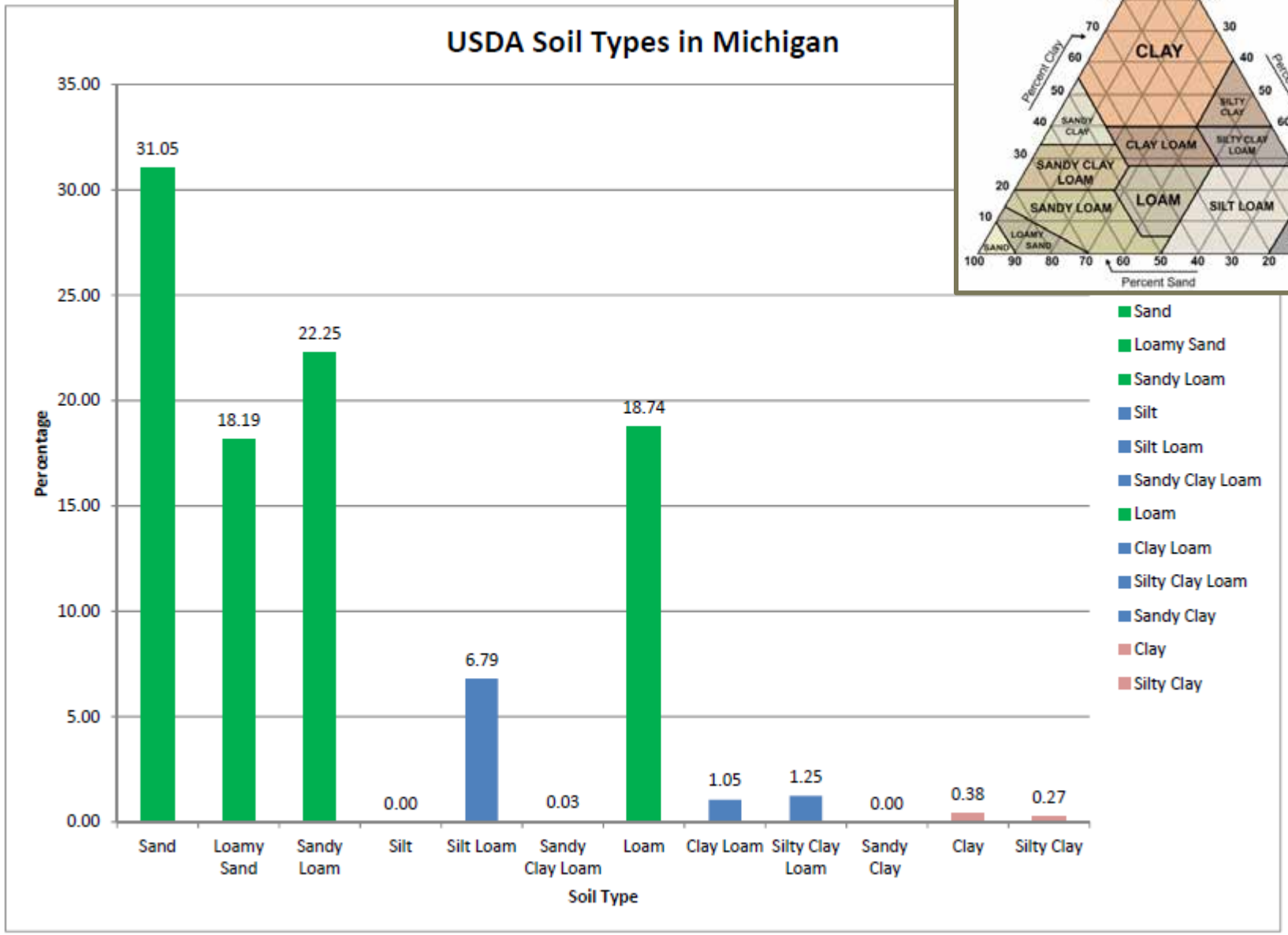
USDA Soil Types in Michigan
Percentage
35.00
30.00
25.00
20.00
15.00
10.00
5.00
0.00
31.05
18.19
22.25
0.00
6.79
0.03
18.74
1.05
1.25
0.00
0.38
0.27
Sand
Loamy Sand
Sandy Loam
Silt
Silt Loam
Sandy Clay Loam
Loam
Clay Loam
Silty Clay Loam
Sandy Clay
Clay
Silty Clay
Soil Type
Sand
Loamy Sand
Sandy Loam
Silt
Silt Loam
Sandy Clay Loam
Loam
Clay Loam
Silty Clay Loam
Sandy Clay
Clay
Silty Clay
CLAY
SILTY CLAY
SANDY CLAY
CLAY LOAM
SILTY CLAY LOAM
SANDY CLAY LOAM
LOAM
SANDY LOAM
SILT LOAM
LOAMY SAND
SAND
SILT
Percent Clay
Percent Silt
Percent Sand

Temperature

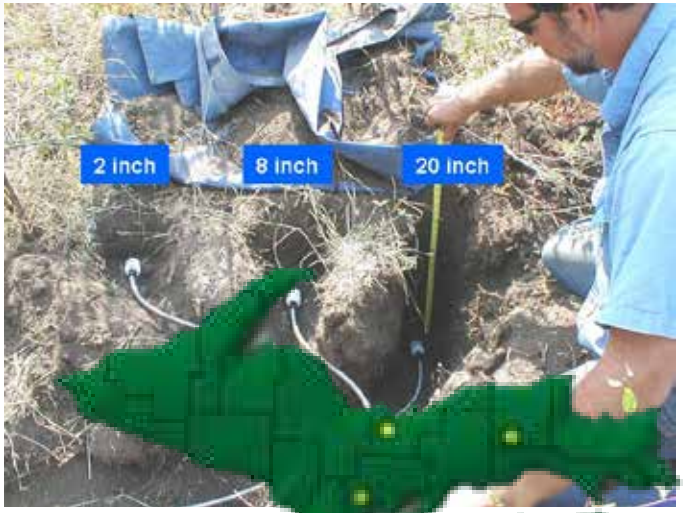

- MSU Extension - Enviro-weather
- http://enviroweather.msu.edu/homeMap.php

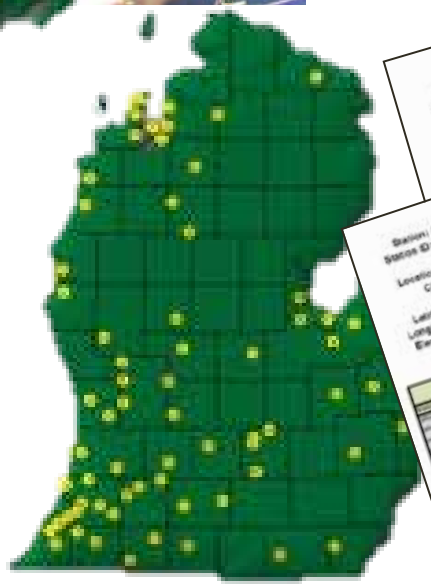

County Specific Temperature

Table 3
Facility Specific Temperatures by County (degrees Celsius)

County	Temp	County	Temp	County	Temp	County	Temp
ALCONA	9	DICKINSON	9	LAKE	11.5	OCEA[illegible]	12
ALGER	8.5	EATON	12	LAPEER	11	O[illegible]W	9.5
ALLEGAN	11.5	EMMET	9.5	LEELANAU	11	[illegible]ONAGON	8
ALPENA	9	GENESEE	10.5	LENAWEE	[illegible]	[illegible]	11
ANTRIM	10	GLADWIN	10	LIVINGSTON	[illegible]	[illegible]	[illegible]
ARENAC	9.5	GOGEBIC	8	LUCE	[illegible]	[illegible]	[illegible]
BARAGA	8.5	GRAND TRAVERSE	11	MACKINAC	8.5	OTTA[illegible]	[illegible]
BARRY	12	GRATIOT	11	MACOMB	11	PRESQUE I[illegible]	9
BAY	10	HILLSDALE	12.5	MANISTEE	11.5	ROSCOMMO[illegible]	10
BENZIE	11	HOUGHTON	8	MARQUETTE	8.5	SAGINAW	10.5
BERRIEN	13	HURON	11	MASON	12	SANILAC	11
BRANCH	12.5	INGHAM	11.5	MECOSTA	11	SCHOOLCRAFT	8.5
CALHOUN	13	IONIA	11	MENOMINEE	9.5	SHIAWASSEE	11
CASS	12.5	IOSCO	9.5	MIDLAND	10.5	ST. CLAIR	11
CHARLEVOIX	9.5	IRON	8.5	MISSAUKEE	10	ST. JOSEPH	12
CHEBOYGAN	9	ISABELLA	10.5	MONROE	11	TUSCOLA	10
CHIPPEWA	8.5	JACKSON	12.5	MONTCALM	11	VAN BUREN	12
CLARE	10.5	KALAMAZOO	12	MONTMORENCY	9	WASHTENAW	11.5
CLINTON	11	KALKASKA	10	MUSKEGON	12	WAYNE	11
CRAWFORD	9.5	KENT	11	NEWAYGO	12	WEXFORD	11
DELTA	9	KEWEENAW	8	OAKLAND	11		

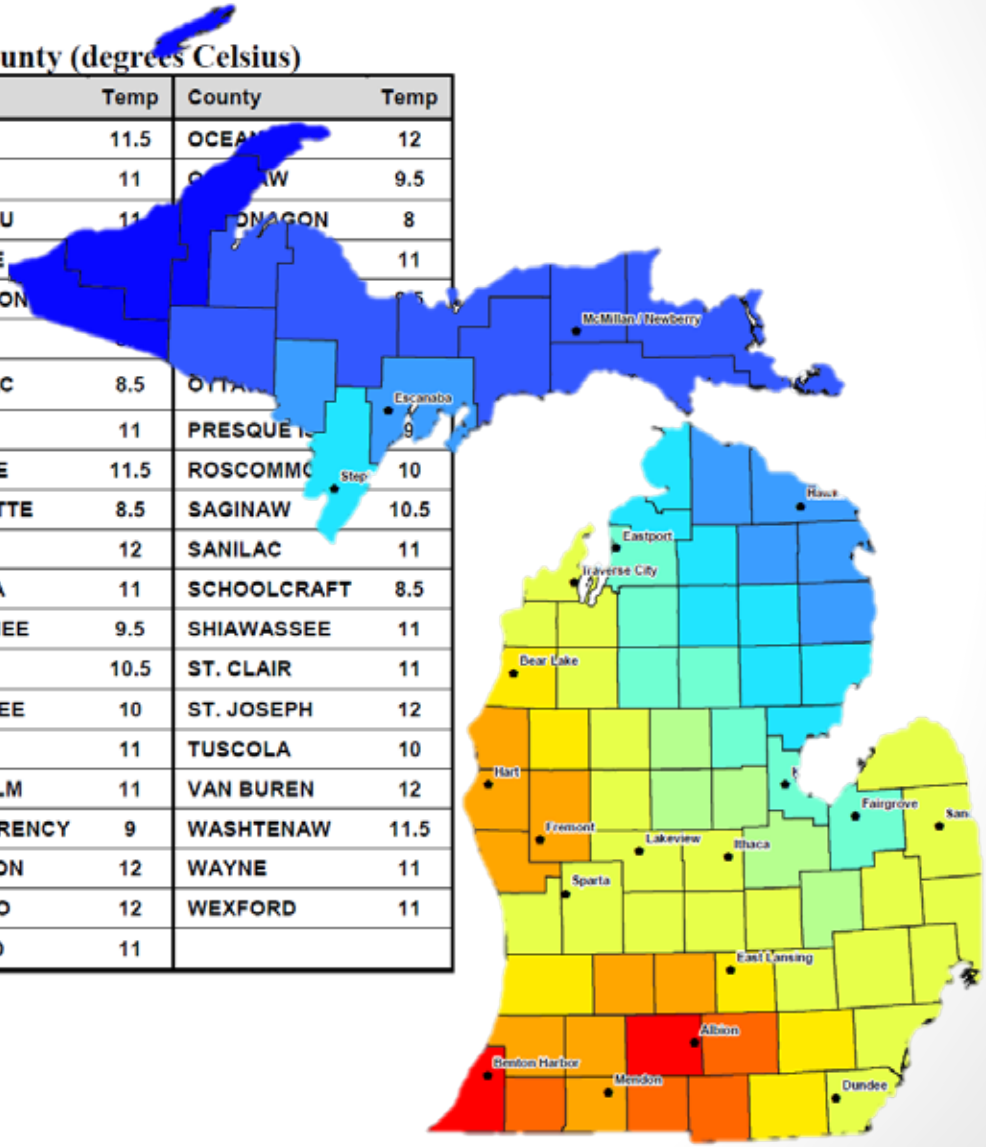

Rule 7 Summary

Rule 27

- **Replaces** GVIIC and SVIIC
- Volatilization to Indoor Air Screening Levels and Criteria
  - Incorporates Tiered Process
    - Volatilization to Indoor Air Pathway (VIAP)
    - Volatilization to Indoor Air Criteria (VIAC)
  - Soil, groundwater, and vapor concentrations

Tiered Approach

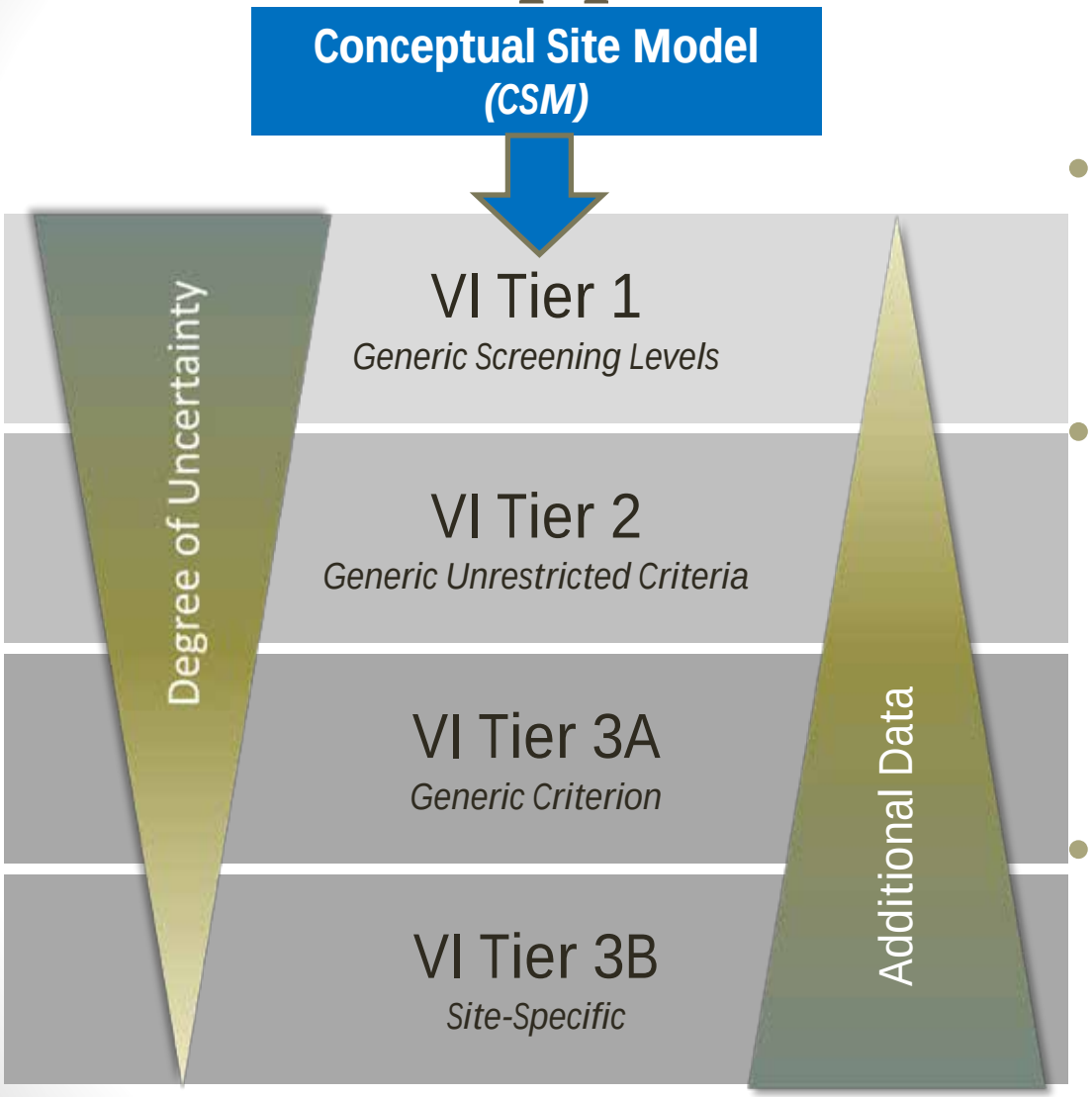

- Common in modern risk-based guidance
- Intended to promote:
  - Efficiency
  - Better characterization
- Other key features:
  - Self implemented
    - up to Tier 3a
  - Flexible

Volatilization to Indoor Air Pathway (VIAP)

VI Tier 1 Screening Level
- Applicable to a wide range of sites

VI Tier 2 Generic Criterion
- Facility-specific geological and physical site conditions

VI Tier 3
- 3A - Land Use and Building Information
- 3B - Alt Approach

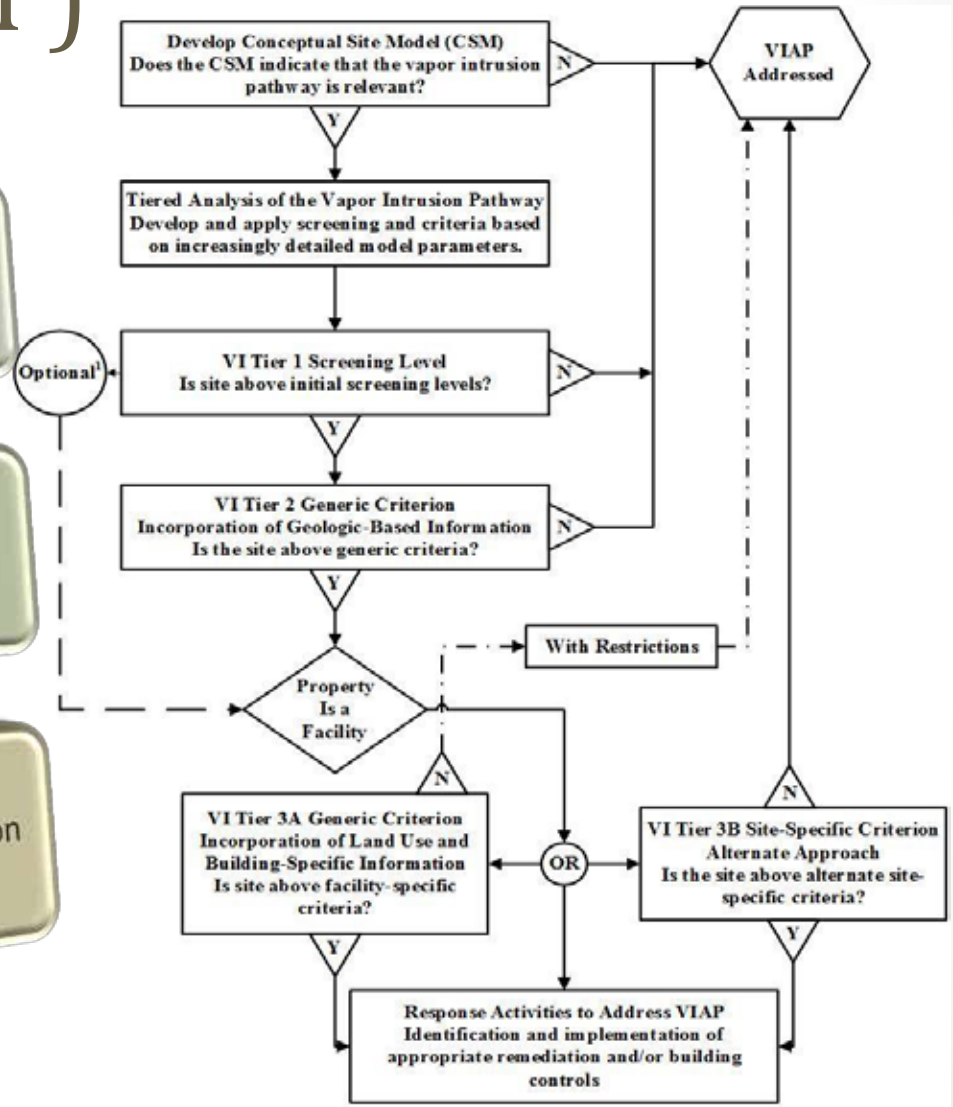

1.

Tiered Approach in Rules

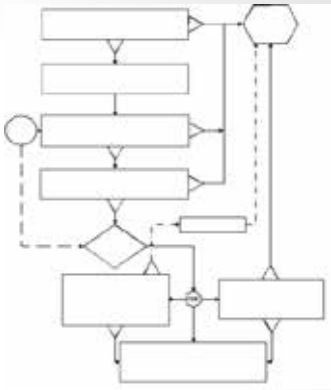

- Process
  - more than just equations
  - combinations
- Generic criteria using facility-specific inputs
  - No restrictions are necessary
  - Need to use the values provided
  - Previously allowed for. . . rarely used
    - Clear on when a party may elect to use

Generic Assumption #1 Residential Structure

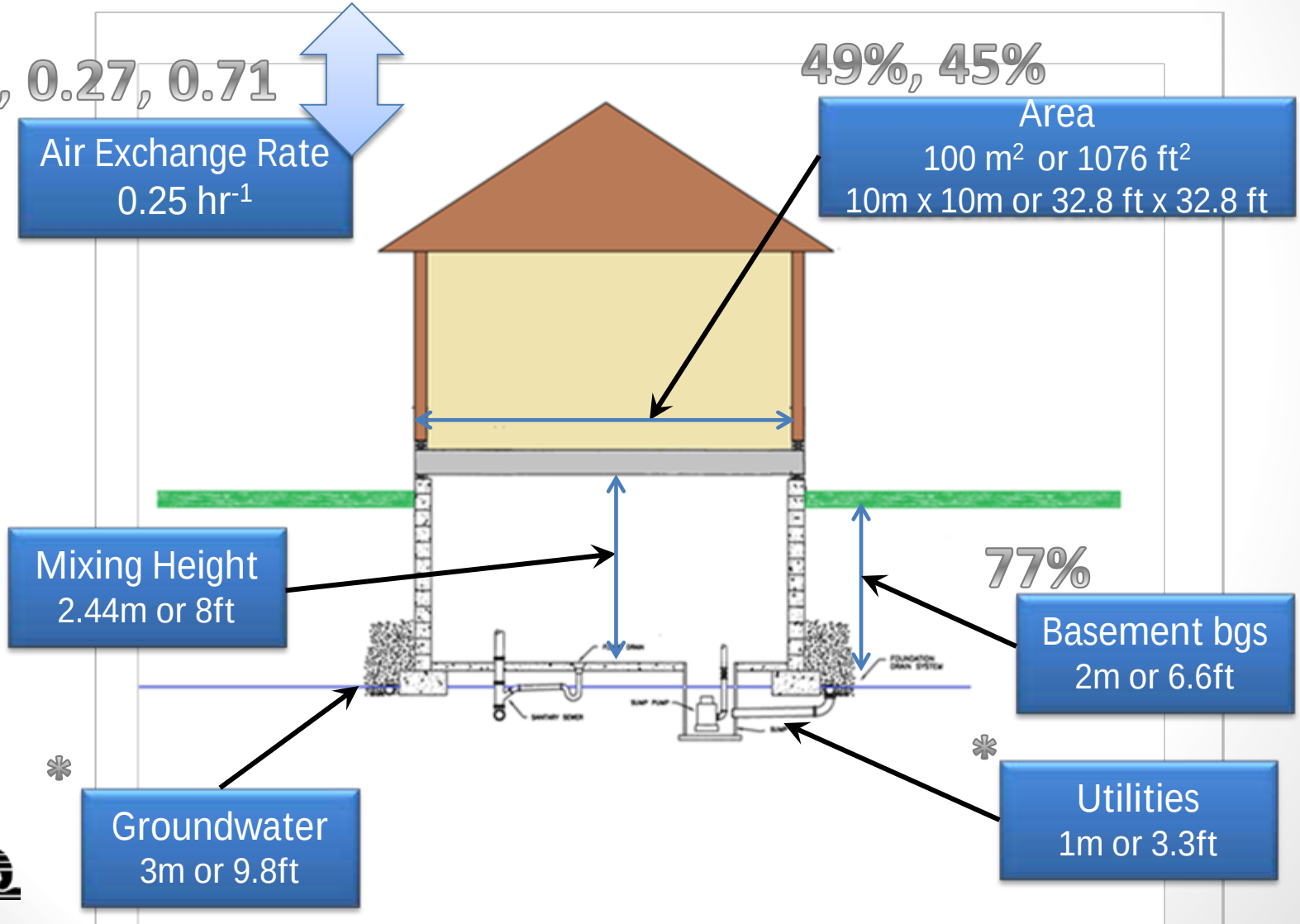

Generic Assumption #2
Depth to GW < 10 feet

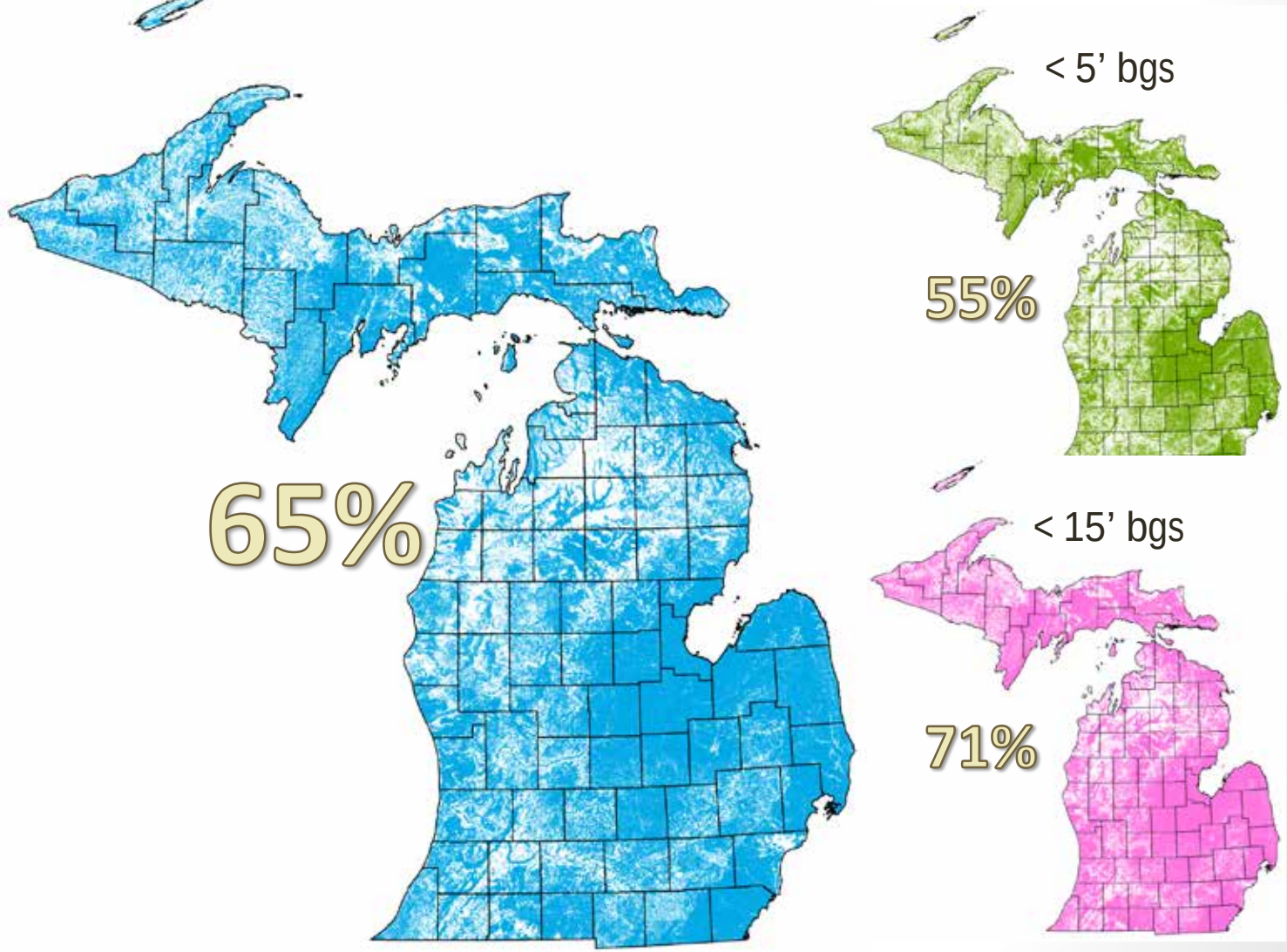

VI Tier 1 Screening Values

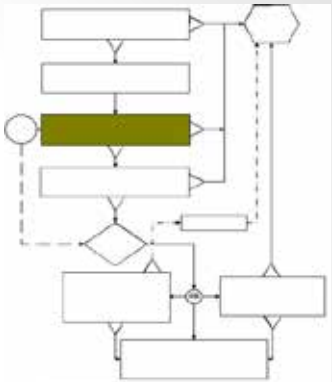

- R 299.46 Table 4

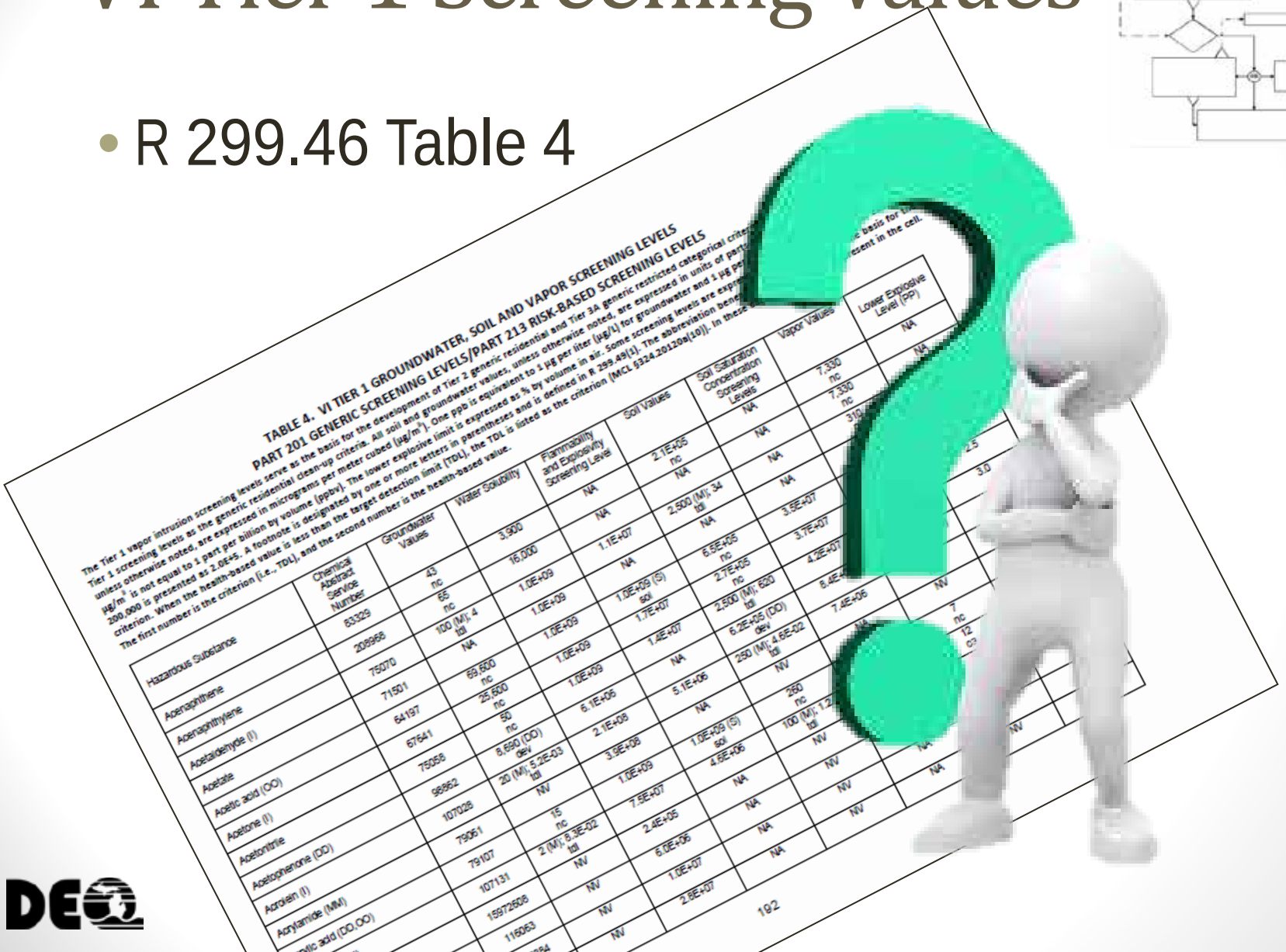

TABLE 4. VI TIER 1 GROUNDWATER, SOIL AND VAPOR SCREENING LEVELS
PART 201 GENERIC SCREENING LEVELS/PART 213 RISK-BASED SCREENING LEVELS

The Tier 1 vapor intrusion screening levels serve as the basis for the development of Tier 2 generic residential and Tier 3A generic restricted categorical crite
Tier 1 screening levels as the generic residential clean-up criteria. All soil and groundwater values, unless otherwise noted, are expressed in units of parts
unless otherwise noted, are expressed in micrograms per meter cubed (µg/m³). One ppb is equivalent to 1 µg per liter (µg/L) for groundwater and 1 µg per
µg/m³ is not equal to 1 part per billion by volume (ppbv). The lower explosive limit is expressed as % by volume in air. Some screening levels are expre
200,000 is presented as 2.0E+5. A footnote is designated by one or more letters in parentheses and is defined in R 299.49(1). The abbreviation bene
criterion. When the health-based value is less than the target detection limit (TDL), the TDL is listed as the criterion (MCL §324.20120a(10)). In these
The first number is the criterion (i.e., TDL), and the second number is the health-based value.

Hazardous Substance	Chemical Abstract Service Number	Groundwater Values	Water Solubility	Flammability and Explosivity Screening Level	Soil Values	Soil Saturation Concentration Screening Levels	Vapor Values	Lower Explosive Level (PP)
Acenaphthene	83329	43 nc	3,900	NA	2.1E+05 nc	NA	7,330 nc	NA
Acenaphthylene	208968	65 nc	16,000	NA	NA	NA	7,330 nc	NA
Acetaldehyde (I)	75070	100 (M); 4 tdl	1.0E+09	1.1E+07	2,500 (M); 34 tdl	NA	310	
Acetate	71501	NA	1.0E+09	NA	NA	NA		
Acetic acid (OO)	64197	69,600 nc	1.0E+09	1.0E+09 (S) sol	6.5E+05 nc	3.5E+07		2.5
Acetone (I)	67641	25,600 nc	1.0E+09	1.7E+07	2.7E+05 nc	3.7E+07		3.0
Acetonitrile	75058	50 nc	1.0E+09	1.4E+07	2,500 (M); 620 tdl	4.2E+07		
Acetophenone (DD)	98862	8,690 (DD) dev	6.1E+06	NA	6.2E+05 (DD) dev	8.4E+		
Acrolein (I)	107028	20 (M); 5.2E-03 tdl	2.1E+08	5.1E+06	250 (M); 4.6E-02 tdl	7.4E+06	NV	
Acrylamide (MM)	79061	NV	3.9E+08	NA	NV	NA		
Acrylic acid (DD,OO)	79107	15 nc	1.0E+09	1.0E+09 (S) sol	260 nc			
	107131	2 (M); 8.3E-02 tdl	7.5E+07	4.6E+06	100 (M); 1.2 tdl	NV		
	15972608	NV	2.4E+05	NA	NV	NA	NV	
	116063	NV	6.0E+06	NA	NV	NA		
		NV	1.0E+07	NA	NV	NA		
		NV	2.8E+07	NA	NV	NA		

192

VI Tier I: Initial Screening

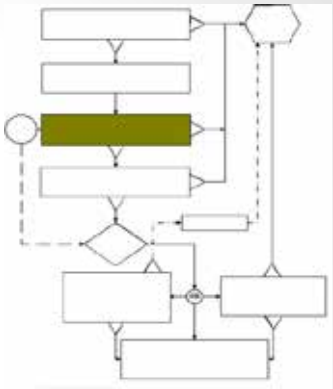

- Applicable to most sites
  - Soil, groundwater, and vapor
  - Designed to be protective for any VI
  - Identifies a <u>potential</u> “source of vapor”
  - Limited data necessary
- Determines whether any further investigation of the VI pathway is necessary

Tier I Outcomes

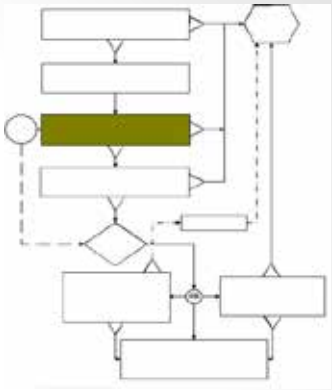

- A source of vapors is not present
  - No further investigation or response action required

OR

- A source of vapors may be present that poses the potential for VI
  - Parties may proceed to VI Tier 2, VI Tier 3A, or 3B; and/or
  - Implement a response action (remedy)
  - Party may use the values to establish a facility

VI Tier 2: Generic Unrestricted Criteria

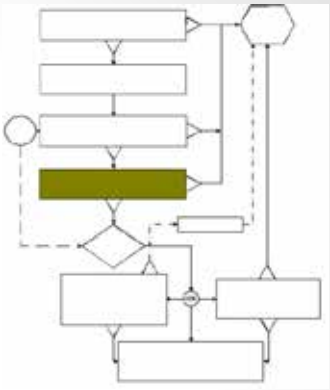

- “Facility" determination
- Identifies a source of vapors
  - Incorporates site-specific (geologic) information
  - Aids in identifying use limitations
- Land use or building information can not be modified
- Tier 1 may equal Tier 2

VI Tier 2 Outcomes

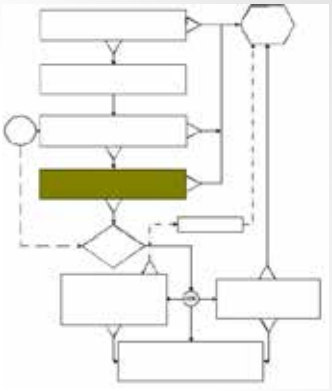

- Property is not a facility
  - A source of vapors is NOT present

OR

- Property is a facility
  - Proceed to Tier 3A or 3B to further evaluate vapor intrusion risks; or
  - Proceed to an appropriate response action

Calculator to Generate the

VI TIER 2

Volitilzation to Indoor Air Criteria

(Tier 2 VIAC)

Clear Contents

PROJECT INFORMATION

NOTES:

What is the expected shallowest depth of groundwater?		
Depth to groundwater:	Input Needed	*Additional information is required*
How are your soils classified?		
What is your soil type?		
SCS soil textural classification code:	Input Needed	*Additional information is required*
Temperature utilized for TS:	Input Needed °C	
System temp based upon:	Kent	

Soil type impacts…

Dry Bulk Density	Air-Filled Porosity	Effective Total Fluid Saturation	Relative Air Permeability	Total porosity in capillary zone	Effective Vapor Permeability
Soil total porosity	Residual soil water content	vadose zone soil intrinsic permeability	Cap zone eff diffusion coefficient	Building Separation (including cap fringe)	Water filled porosity in capillary zone
Soil water-filled porosity	Soil saturated hydraulic conductivity	Thickness of capillary zone	Total overall effective diffusion coefficient	Crack effective diffusion coefficient	Infinite source bldg. conc.
van Genuchten shape parameter	Mean particle diameter	Peclet number	attenuation coefficient	Stratum effective diffusion coefficient	Average vapor flow rate into bldg.
	Indoor exp groundwater conc			Air filled porosity in capillary zone	

Calculator to Generate the

VI TIER 2

Volitilzation to Indoor Air Criteria

(Tier 2 VIAC)

Clear Contents

PROJECT INFORMATION

2 +/-

What is the expected shallowest depth to groundwater? 11 ft

Depth to groundwater: 335 cm

NOTES:

Depth to groundwater value must be verifed and documented as it assumes it is not in contact with a structure

26 +/-

How are your soils classified? *Confirmed via lab analysis*

What is your soil type? *loam*

soil textural classification code: L

11

Temperature utilized for TC: 11.0 °C

System temp based upon: Kent

Supporting documentation must be able to identify the site soils as a loam.

83

	VI Tier 1			VI Tier 2		
	VI Tier 1 Soil	VI Tier 1 Groundwater	VI Tier 1 Vapor	VI Tier 2 Soil	VI Tier 2 Groundwater	VI Tier 2 Vapor
Benzene (I,KK)	50 (M); 1.7 tdl	1 (M); 0.13 tdl	110 ca	120 ca	540 ca	110 ca
Tetrachloroethylene (KK)	50 (M); 6.4 tdl	1.6 nc	1,400 nc	440 nc	2,900 nc	1,400 nc
Trichloroethylene (DD,KK,MM,NN)	50 (M); 0.33 tdl	1.0 (M); 7.3E-02 tdl	67 (DD) dev	50 (M); 25 tdl	210 (DD) dev	67 (DD) dev

VI Tier 3

2 Tiers

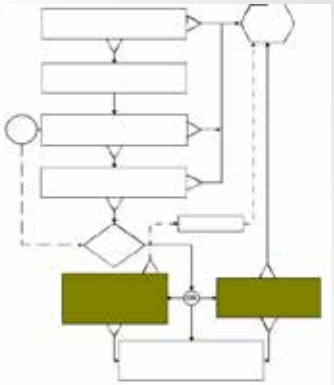

- VI Tier 3A – Generic Criterion
  - Self implementing
  - Uses established values and inputs and allows:
    - Incorporates the use of land use or building information, or both
    - Requires a land or resource use restriction
- VI Tier 3B – Site-Specific
  - Department approval
  - Site specific data (NOT other book data)
  - May use an alternate model

VI Tier 3A

Land Use and Building Info

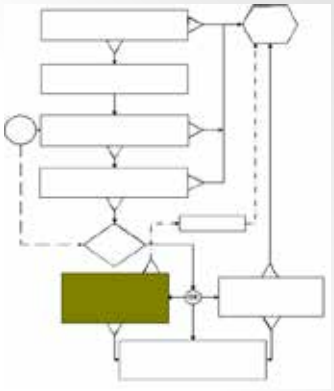

- Identifies potential for VI
- All of Tier 2 **PLUS**:
  - Land use (res and nonres use)
  - Building parameters
- IDs whether remediation, mitigation or building/use restrictions are warranted
- Self implement

VI Tier 3A Outcomes

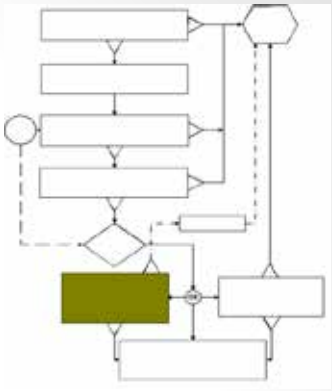

- Property is a facility
  - A source of vapors is present but doesn't pose a risk for VI

OR

- Property is a facility
  - A source of vapors is present that may pose an unacceptable risk

Calculator to Generate the

VI TIER 3A

Volitilzation to Indoor Air Criteria

(Tier 3A VIAC)

Clear Contents

PROJECT INFORMATION

Residential or nonresidential exposure?

Building type?

Foundation type?

FOR INFORMATION PUROSES ONLY:					
Indoor air exchange rate (ER):	*Info Needed*	*hr^{-1}*	*Enclosed space floor length (L_B)*	*Info Needed*	*m*
Enclosed space floor thickness (L_{crack})	*Info Needed*	*cm*	*Enclosed space floor width (W_B)*	*Info Needed*	*m*
Distance below grade to bottom of enclosed space floor (L_F)	*Info Needed*	*cm*	*Enclosed space height (H_B)*	*Info Needed*	*m*

Notes:

What is the expected shallowest depth of groundwater?

Depth to groundwater: ***Input Needed***

Additional information is required

How are your soils classified?

What is your soil type?

SCS soil textural classification code: ***Input Needed***

Additional information is required

Temperature utilized for TS: **Input Needed** ^{o}C

System temp based upon: **Kent**

MECC 2016

Calculator to Generate the

VI TIER 3A

Volitilzation to Indoor Air Criteria

(Tier 3A VIAC)

Clear Contents

PROJECT INFORMATION

2 +/-

Residential or nonresidential exposure?	*Nonresidential*
Building type?	*Manufacturing*
Foundation type?	*Basement*

FOR INFORMATION PUROSES ONLY:

Indoor air exchange rate (ER):	*1.50*	*hr^{-1}*	*Enclosed space floor length (L_B)*	*20*	*m*
Encl ... ess (L_{crack})	*15*	*cm*	*Enclosed space floor width (W_B)*	*20*	*m*
Distance below grade to bo ... floor ...	*200*	*cm*	*Enclosed space height (H_B)*	*3.66*	*m*

2 +/-

What is the expected shallowest depth of groundwater?	11	ft
Depth to groundwater:	335 cm	

Notes:

Groundwater value must be verifed and documented as it assumes it is not in contact with a structure

11

How are your soils classified?	*Confirmed via lab analysis*
What is your soil type?	loam
SCS soil textural classification code:	*L*
Temperature utilized for TS	11.0 °C
System temp based upon:	Kent

26 +/-

Supporting documentation should be able to identify the site soils as a loam.

83

MECC 2016

Tiered Analysis

- Assumptions:
  - Manufacturing with a basement
  - 11 feet to GW
  - Located in Kent County
  - USDA Classification: Loam

	VI Tier 1			VI Tier 2			VI Tier 3A			
	VI Tier 1 Soil	VI Tier 1 Groundwater	VI Tier 1 Vapor	VI Tier 2 Soil	VI Tier 2 Groundwater	VI Tier 2 Vapor	VI Tier 3A Soil	VI Tier 3A Groundwater	VI Tier 3A Vapor	VI Tier 3A Vapor 1M
Benzene (I,KK)	50 (M); 1.7 tdl	1 (M); 0.13 tdl	110 ca	120 ca	540 ca	110 ca	3,900 ca	3,100 ca	260 ca	5.9E+05 ca
Tetrachloroethylene (KK)	50 (M); 6.4 tdl	1.6 nc	1,400 nc	440 nc	2,900 nc	1,400 nc	9,100 nc	18,000 nc	2,040 nc	4.8E+06 nc
Trichloroethylene (DD,KK,MM,NN)	50 (M); 0.33 tdl	1.0 (M); 7.3E-02 tdl	67 (DD) dev	50 (M); 25 tdl	210 (DD) dev	67 (DD) dev	360 (DD) dev	1,200 (DD) dev	67 (DD) dev	1.6E+05 (DD) dev

VI Tier 3B
Site Specific

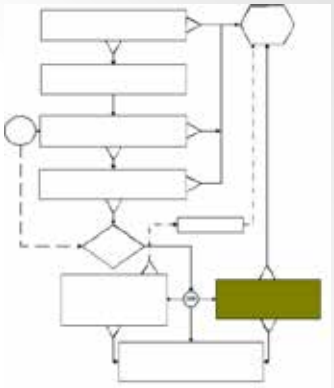

- May use
  - Same model as the DEQ but site-specific information
  - Different models
    - NAPL
    - Multi-layered
    - Petroleum
- DEQ approval
- Outcomes. . .
  - Facility(?)
  - Unacceptable risk

Emerging Issues

- Sampling methods
  - TO-15 vs TO-17
- Predicting VI
  - PVI vs CVI
- Sampling for presumptive mitigation
  - Facility determination vs design
- Indoor air and potential acute risks
- Others/More
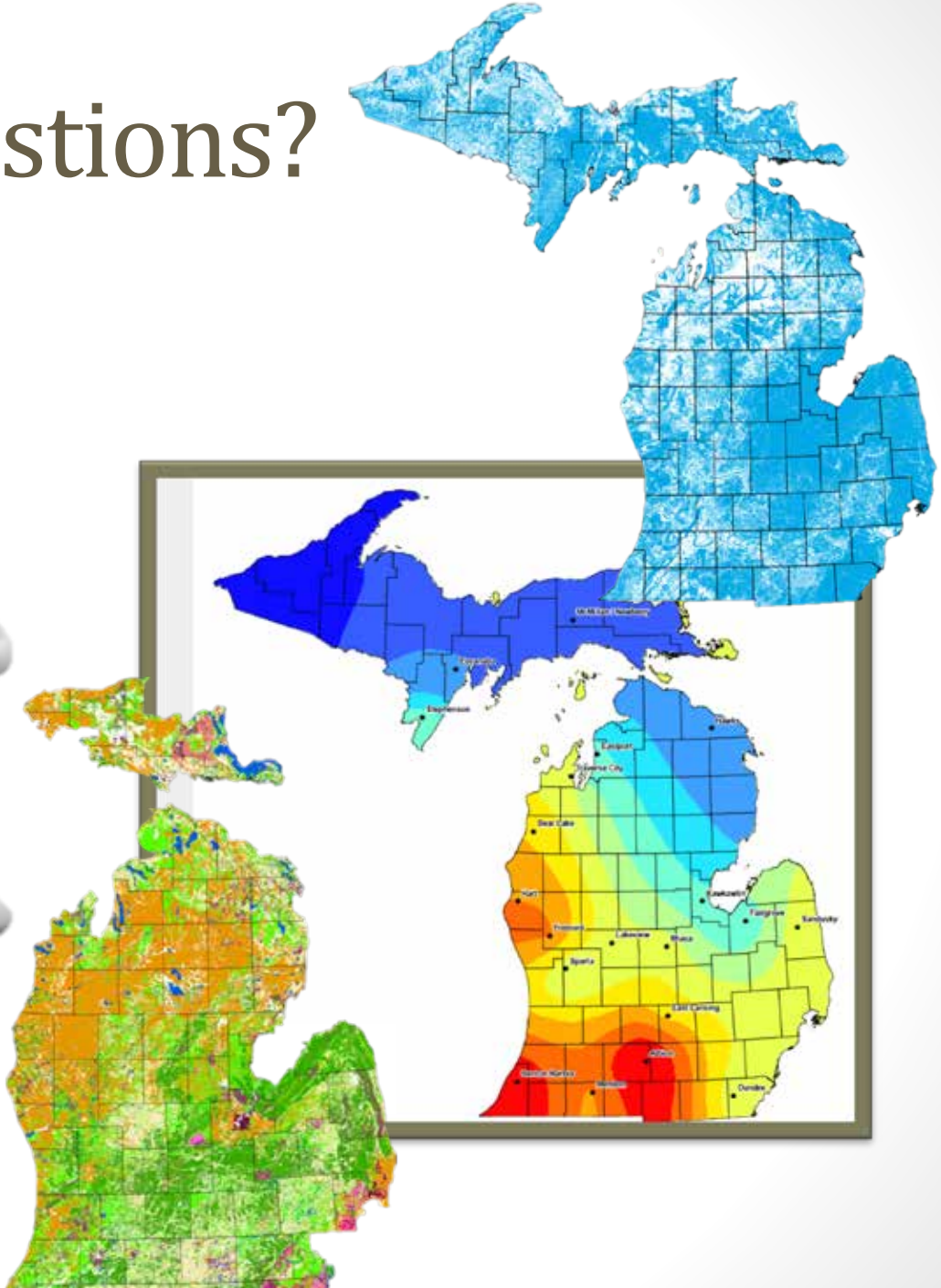
Rule 7 Questions?