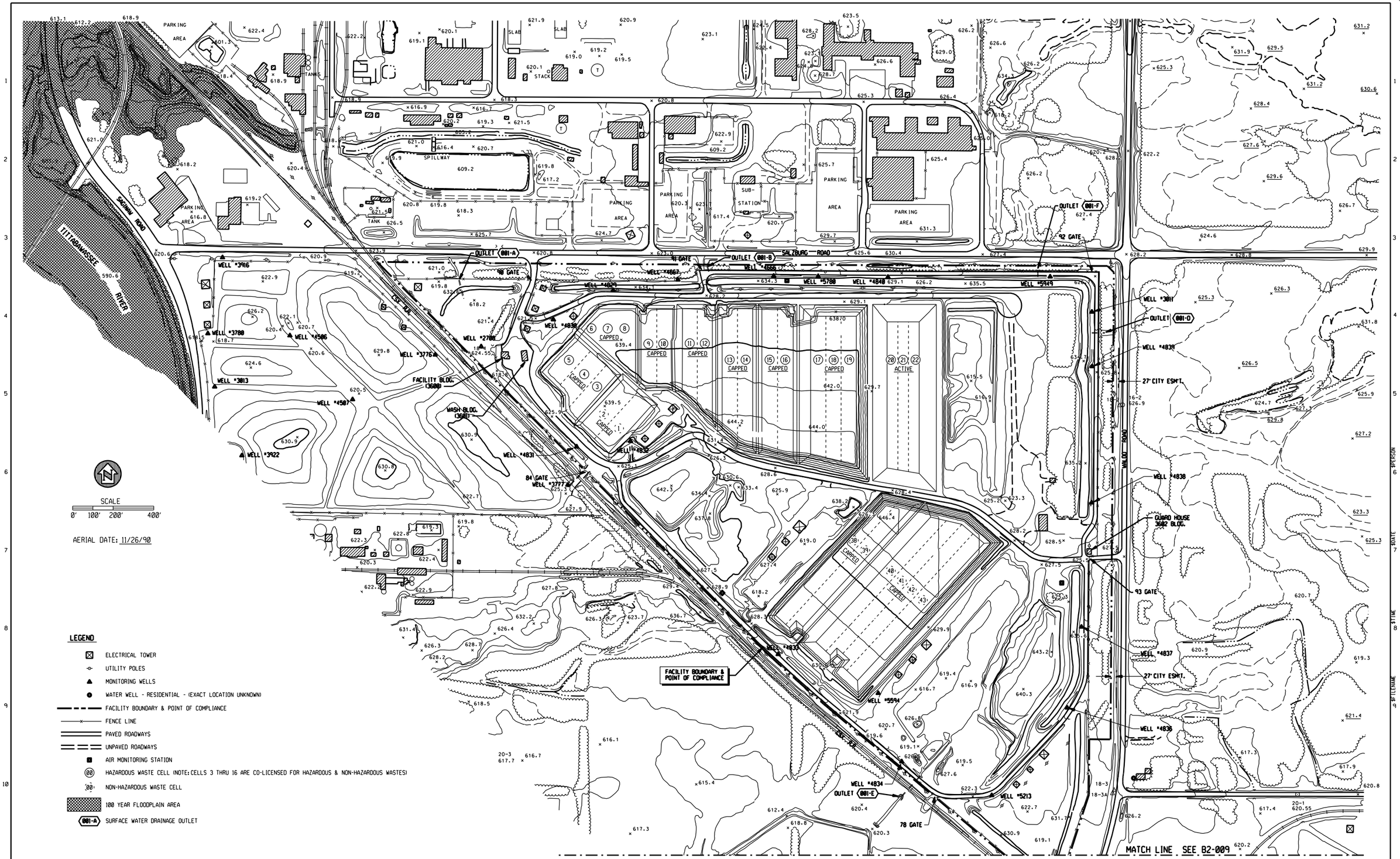

REV. MARK	REVISION	BY	CHK	APP	DATE
A	ADDED REFERENCE TO POINT OF COMPLIANCE & OUTLET "F"	LEG	JJA	JJA	9/08

REV. MARK	REVISION	BY	CHK	APP	DATE

DRAWING ISSUE RECORD

ISSUE NO.	REV	MATERIAL OR JOB SPEC	BID	FAB	CONST	REF
			DATE ISSUED FOR			

DESIGNED	J.J. ALLEN	11/05
DRAWN	L.E. GIRARDIN	11/05
CHECKED	J.J.A.	11/05
APPROVED	J.J.A.	11/05
PROJ. ENGR.	J.J. ALLEN	11/05
MFG. REP.	STEVE LUCAS	11/05

STATUS | PLANT NO.
P.E. SEAL

THE DOW CHEMICAL COMPANY
MICHIGAN DIVISION — MIDLAND, MICHIGAN
SALZBURG LANDFILL — 3600 BLDG

FIGURE 11.P-1
SITE TOPOGRAPHIC MAP
(SHEET 1 OF 2)

EJN NUMBER	SCALE		REV.
114291	1" = 200'-0"	B2-100-1374	A

2 PLN

PRINTED | VER.

$INSTRUCTIONS $FILENAME $TIME $DATE $PLOTSCALE

LEGEND

- ELECTRICAL TOWER
- UTILITY POLES
- MONITORING WELLS
- WATER WELL - RESIDENTIAL - (EXACT LOCATION UNKNOWN)
- FACILITY BOUNDARY & POINT OF COMPLIANCE
- FENCE LINE
- PAVED ROADWAYS
- UNPAVED ROADWAYS
- AIR MONITORING STATION
- (00) HAZARDOUS WASTE CELL
- (00) NON-HAZARDOUS WASTE CELL
- (001-C) SURFACE WATER DRAINAGE OUTLET

SCALE

0' 100' 200' 400'

AERIAL DATE: 11/26/90

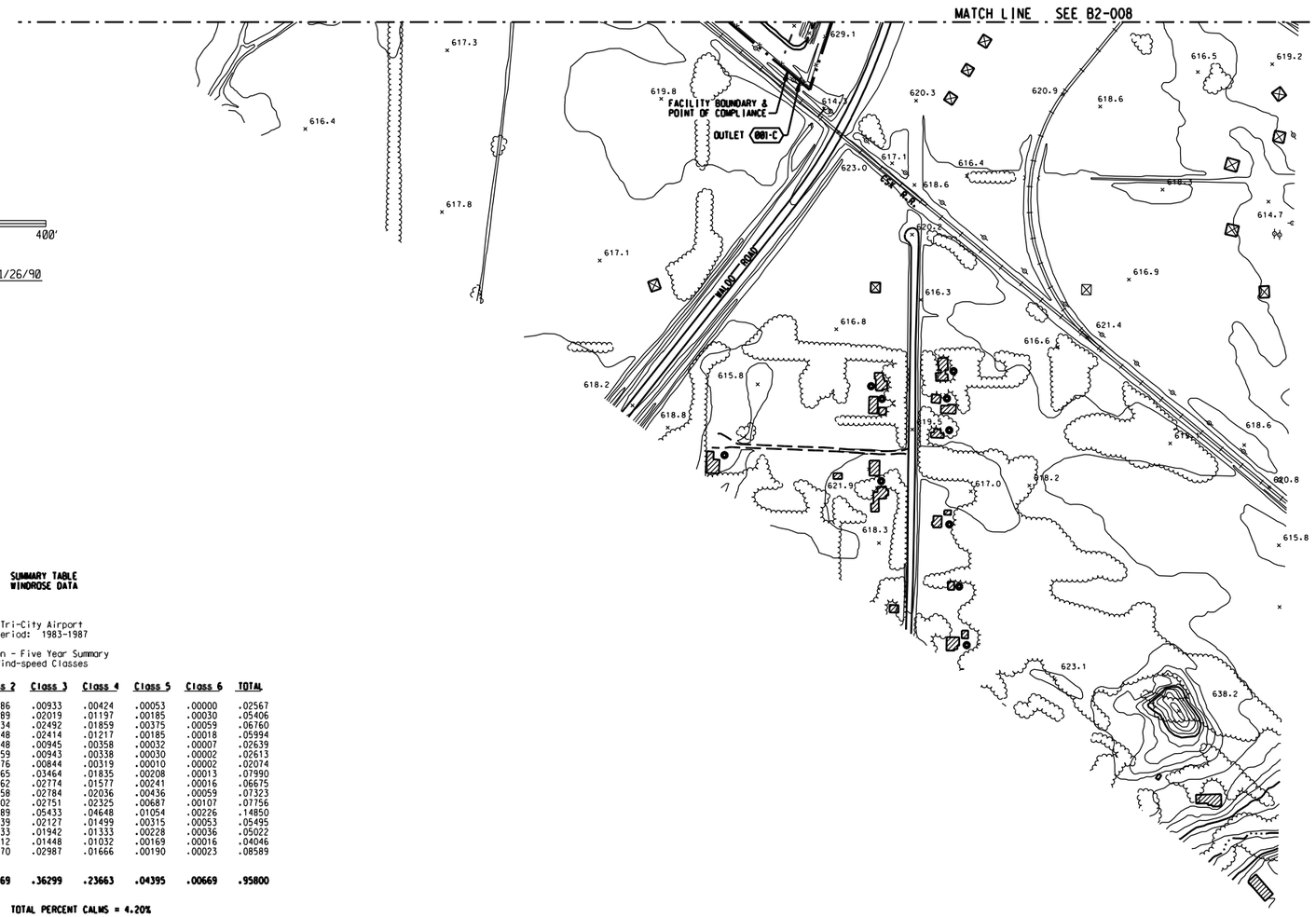

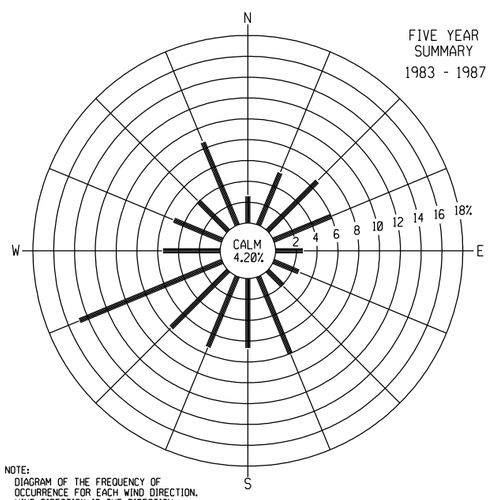

NOTE:
DIAGRAM OF THE FREQUENCY OF OCCURRENCE FOR EACH WIND DIRECTION. WIND DIRECTION IS THE DIRECTION FROM WHICH THE WIND IS BLOWING. EXAMPLE - WIND IS BLOWING FROM THE NORTH 2.6 PERCENT OF THE TIME.

WINDROSE

SUMMARY TABLE
WINDROSE DATA

Tri-City Airport
Period: 1983-1987

Season - Five Year Summary
Wind-speed Classes

Direction	Class 1	Class 2	Class 3	Class 4	Class 5	Class 6	TOTAL
.0	.00171	.00986	.00933	.00424	.00053	.00000	.02567
22.5	.00285	.01689	.02019	.01197	.00185	.00030	.05406
45.0	.00241	.01734	.02492	.01859	.00375	.00059	.06760
67.5	.00312	.01848	.02414	.01217	.00185	.00018	.05994
90.0	.00150	.01148	.00945	.00358	.00032	.00007	.02639
112.5	.00142	.01159	.00943	.00338	.00030	.00002	.02613
135.0	.00124	.00776	.00844	.00319	.00010	.00002	.02074
157.5	.00306	.02165	.03464	.01835	.00208	.00013	.07990
180.0	.00205	.01862	.02774	.01577	.00241	.00016	.06675
202.5	.00150	.01858	.02784	.02036	.00436	.00059	.07323
225.0	.00183	.01702	.02751	.02325	.00687	.00107	.07756
247.5	.00399	.03089	.05433	.04648	.01054	.00226	.14850
270.0	.00162	.01339	.02127	.01499	.00315	.00053	.05495
292.5	.00150	.01333	.01942	.01333	.00228	.00036	.05022
315.0	.00169	.01212	.01448	.01032	.00169	.00016	.04046
337.5	.00454	.03270	.02987	.01666	.00190	.00023	.08589
TOTAL	**.03605**	**.27169**	**.36299**	**.23663**	**.04395**	**.00669**	**.95800**

TOTAL PERCENT CALMS = 4.20%

Wind Speed Classes (Knots)

Class 1 -------- 1-3
Class 2 -------- 4-6
Class 3 -------- 7-10
Class 4 -------- 11-16
Class 5 -------- 17-21
Class 6 -------- > 21

REV. MARK	REVISION	BY	CHK	APP	DATE
A	ADDED REFERENCE TO POINT OF COMPLIANCE	LEG	JJA	JJA	9/08

DRAWING ISSUE RECORD

ISSUE NO.	REV	MATERIAL OR JOB SPEC	BID	FAB	CONST	REF
			DATE ISSUED FOR			

DESIGNED	J.J. ALLLEN	11/05
DRAWN	L.E. GIRARDIN	11/05
CHECKED	J.J.A.	11/05
APPROVED	J.J.A.	11/05
PROJ. ENGR.	J.J. ALLEN	11/05
MFG. REP.	STEVE LUCAS	11/05

STATUS | PLANT NO.
P.E. SEAL

THE DOW CHEMICAL COMPANY
MICHIGAN DIVISION — MIDLAND, MICHIGAN
SALZBURG LANDFILL — 3600 BLDG

FIGURE 11.P-2
SITE TOPOGRAPHIC MAP
(SHEET 2 OF 2)

EJN NUMBER	SCALE		REV.
114291	1" = 200'-0"	B2-101-1374	A

2 PLN

PRINTED | VER.

$PERSON $DATE $TIME $FILENAME $INSTRUCTIONS

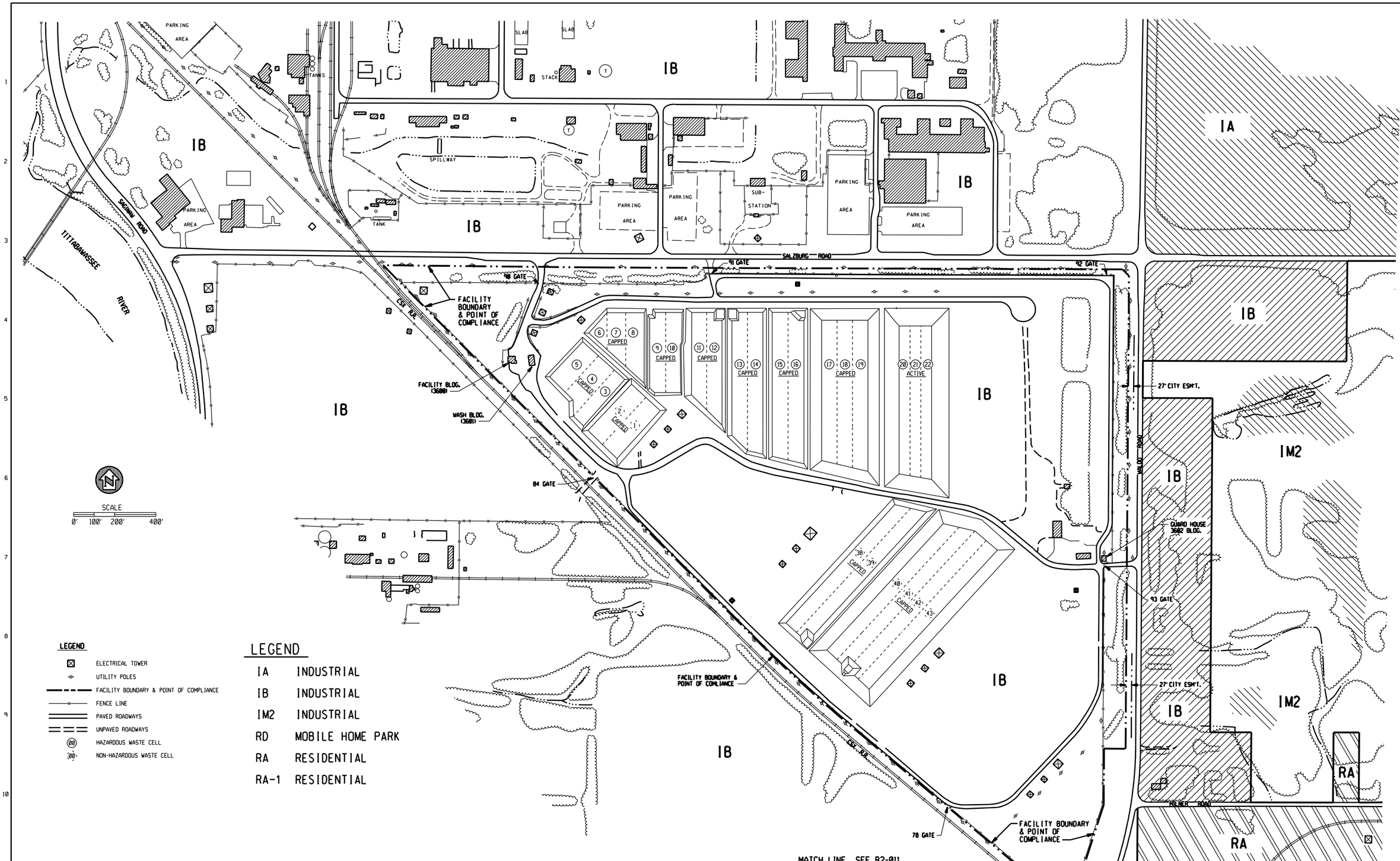

REV. MARK	REVISION	BY	CHK	APP	DATE
A	ADDED REFERENCE TO POINT OF COMPLIANCE	LEG	JJA	JJA	9/08

REV. MARK	REVISION	BY	CHK	APP	DATE

DRAWING ISSUE RECORD

ISSUE NO.	REV	MATERIAL OR JOB SPEC	BID	FAB	CONST	REF
			DATE ISSUED FOR			

DESIGNED	J.J. ALLEN	11/05
DRAWN	L.E. GIRARDIN	11/05
CHECKED	J.J.A.	11/05
APPROVED	J.J.A.	11/05
PROJ. ENGR.	J.J. ALLEN	11/05
MFG. REP.	STEVE LUCAS	11/05

STATUS | PLANT NO.
P.E. SEAL

THE DOW CHEMICAL COMPANY
MICHIGAN DIVISION — MIDLAND, MICHIGAN
SALZBURG LANDFILL — 3600 BLDG

FIGURE 11.P-3
SURROUNDING LAND USES MAP
(SHEET 1 OF 2)

EJN NUMBER	SCALE		REV.
114291	1" = 200'-0"	B2-102-1374	A

2 PLN

PRINTED | VER.

$INSTRUCTIONS $FILENAME $TIME $DATE $PERSON

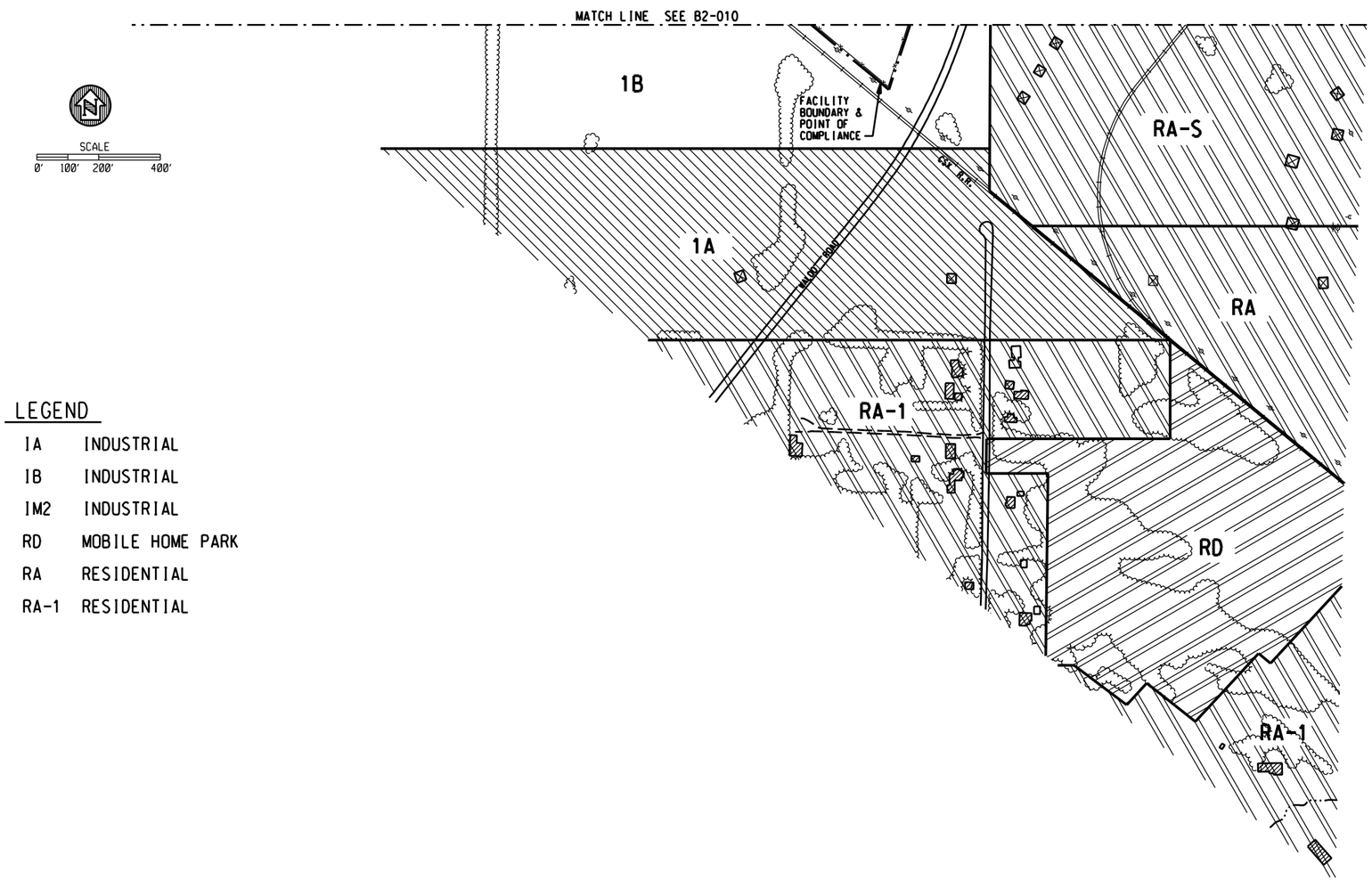

SCALE
0' 100' 200' 400'

LEGEND

- ELECTRICAL TOWER
- UTILITY POLES
- FACILITY BOUNDARY & POINT OF COMPLIANCE
- FENCE LINE
- PAVED ROADWAYS
- UNPAVED ROADWAYS
- HAZARDOUS WASTE CELL

LEGEND

IA	INDUSTRIAL
IB	INDUSTRIAL
IM2	INDUSTRIAL
RD	MOBILE HOME PARK
RA	RESIDENTIAL
RA-1	RESIDENTIAL

REV. MARK	REVISION	BY	CHK	APP	DATE
A	ADDED REFERENCE TO POINT OF COMPLIANCE	LEG	JJA	JJA	9/08

REV. MARK	REVISION	BY	CHK	APP	DATE

DRAWING ISSUE RECORD

ISSUE NO.	REV	MATERIAL OR JOB SPEC	BID	FAB	CONST	REF
			DATE ISSUED FOR			

DESIGNED	J.J. ALLEN	11/05
DRAWN	L.E. GIRARDIN	11/05
CHECKED	J.J.A.	11/05
APPROVED	J.J.A.	11/05
PROJ. ENGR.	J.J. ALLEN	11/05
MFG. REP.	STEVE LUCAS	11/05

STATUS | PLANT NO.
P.E. SEAL

THE DOW CHEMICAL COMPANY
MICHIGAN DIVISION — MIDLAND, MICHIGAN
SALZBURG LANDFILL — 3600 BLDG

FIGURE 11.P-4
SURROUNDING LAND USES MAP
(SHEET 2 OF 2)

EJN NUMBER	SCALE		REV.
114291	1" = 200'-0"	B2-103-1374	A

2 PLN

PRINTED | VER.

$INSTRUCTIONS $FILENAME $TIME $DATE

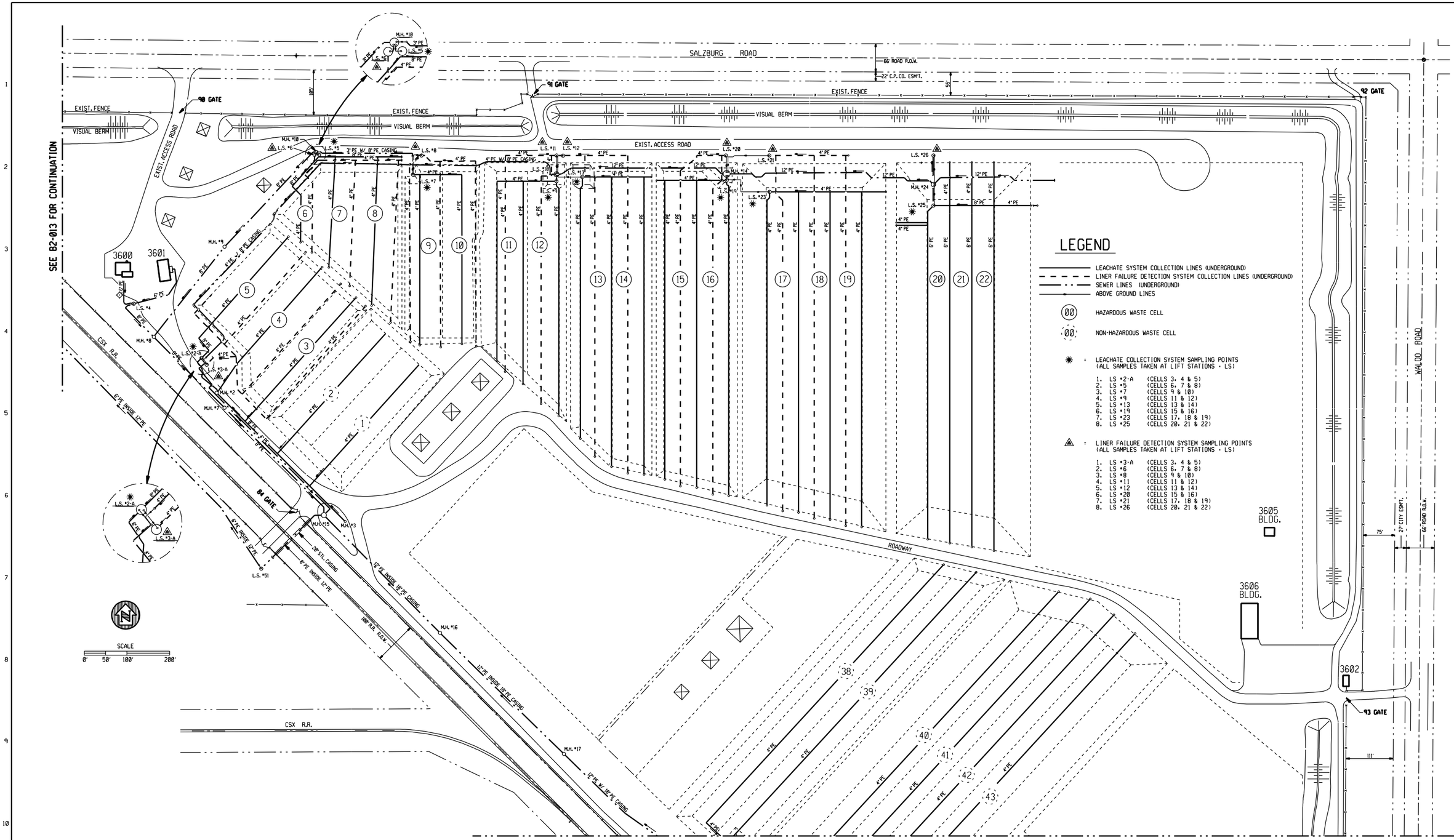

LEGEND

- LEACHATE SYSTEM COLLECTION LINES (UNDERGROUND)
- LINER FAILURE DETECTION SYSTEM COLLECTION LINES (UNDERGROUND)
- SEWER LINES (UNDERGROUND)
- ABOVE GROUND LINES
- 00 HAZARDOUS WASTE CELL
- 00 NON-HAZARDOUS WASTE CELL
- ✱ = LEACHATE COLLECTION SYSTEM SAMPLING POINTS (ALL SAMPLES TAKEN AT LIFT STATIONS - LS)
  1. LS #2-A (CELLS 3, 4 & 5)
  2. LS #5 (CELLS 6, 7 & 8)
  3. LS #7 (CELLS 9 & 10)
  4. LS #9 (CELLS 11 & 12)
  5. LS #13 (CELLS 13 & 14)
  6. LS #19 (CELLS 15 & 16)
  7. LS #23 (CELLS 17, 18 & 19)
  8. LS #25 (CELLS 20, 21 & 22)
- ▲ = LINER FAILURE DETECTION SYSTEM SAMPLING POINTS (ALL SAMPLES TAKEN AT LIFT STATIONS - LS)
  1. LS #3-A (CELLS 3, 4 & 5)
  2. LS #6 (CELLS 6, 7 & 8)
  3. LS #8 (CELLS 9 & 10)
  4. LS #11 (CELLS 11 & 12)
  5. LS #12 (CELLS 13 & 14)
  6. LS #20 (CELLS 15 & 16)
  7. LS #21 (CELLS 17, 18 & 19)
  8. LS #26 (CELLS 20, 21 & 22)

REV. MARK	REVISION	BY	CHK	APP	DATE	REV. MARK	REVISION	BY	CHK	APP	DATE

DRAWING ISSUE RECORD

ISSUE NO.	REV	MATERIAL OR JOB SPEC	BID	FAB	CONST	REF
			DATE ISSUED FOR			

DESIGNED	J.J. ALLEN	11/05
DRAWN	L.E. GIRARDIN	11/05
CHECKED	J.J.A.	11/05
APPROVED	J.J.A.	11/05
PROJ. ENGR.	J.J. ALLEN	11/05
MFG. REP.	STEVE LUCAS	11/05

STATUS | PLANT NO.
P.E. SEAL

THE DOW CHEMICAL COMPANY
MICHIGAN DIVISION — MIDLAND, MICHIGAN
SALZBURG LANDFILL — 3600 BLDG

APPENDIX 8
SITE SEWERS & SAMPLING POINTS MAP
(SHEET 1 OF 2)

EJN NUMBER	SCALE		REV.
114291	1" = 100'-0"	B2-104-1374	

PRINTED | VER.

2 PLN

$INSTRUCTIONS $FILENAME $TIME $DATE $PERSON

THE PIPELINE FROM THE DISCHARGE POINT AT SALZBURG LANDFILL (MANHOLE #15) TO THE MICHIGAN OPERATIONS PLANT SEWER (MANHOLE #8) IS AN UNDERGROUND, DUAL CONTAINED, HIGH DENSITY POLYETHYLENE (HDPE) LINE FOR ITS ENTIRE LENGTH EXCEPT AT THE TWO LIFT STATIONS (LSs) THAT PUMP THE LEACHATE BACK TO THE WWTP. AT EACH LS (LS#51 & LS#52), THERE IS A SHORT SECTION OF ABOVE GROUND STEEL PIPING THAT IS CONNECTED TO THE HDPE PIPE. THE ABOVE GROUND STEEL PIPING AT THE LSs ACTS AS A SIPHON BREAK ON THE INLET SIDE AND AS A RIGID DISCHARGE PIPE FROM THE PUMP ON THE OUTLET SIDE. THE ABOVE GROUND STEEL PIPE IS ELECTRICALLY TRACED AND INSULATED TO PROTECT AGAINST FREEZING. THE DUAL CONTAINED HDPE PIPE IS BURIED BELOW FROST LEVEL.

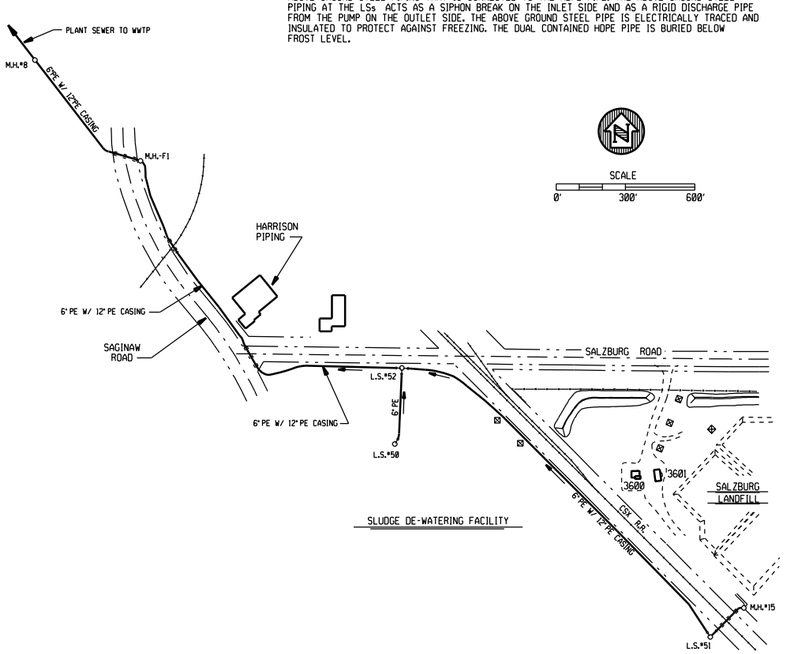

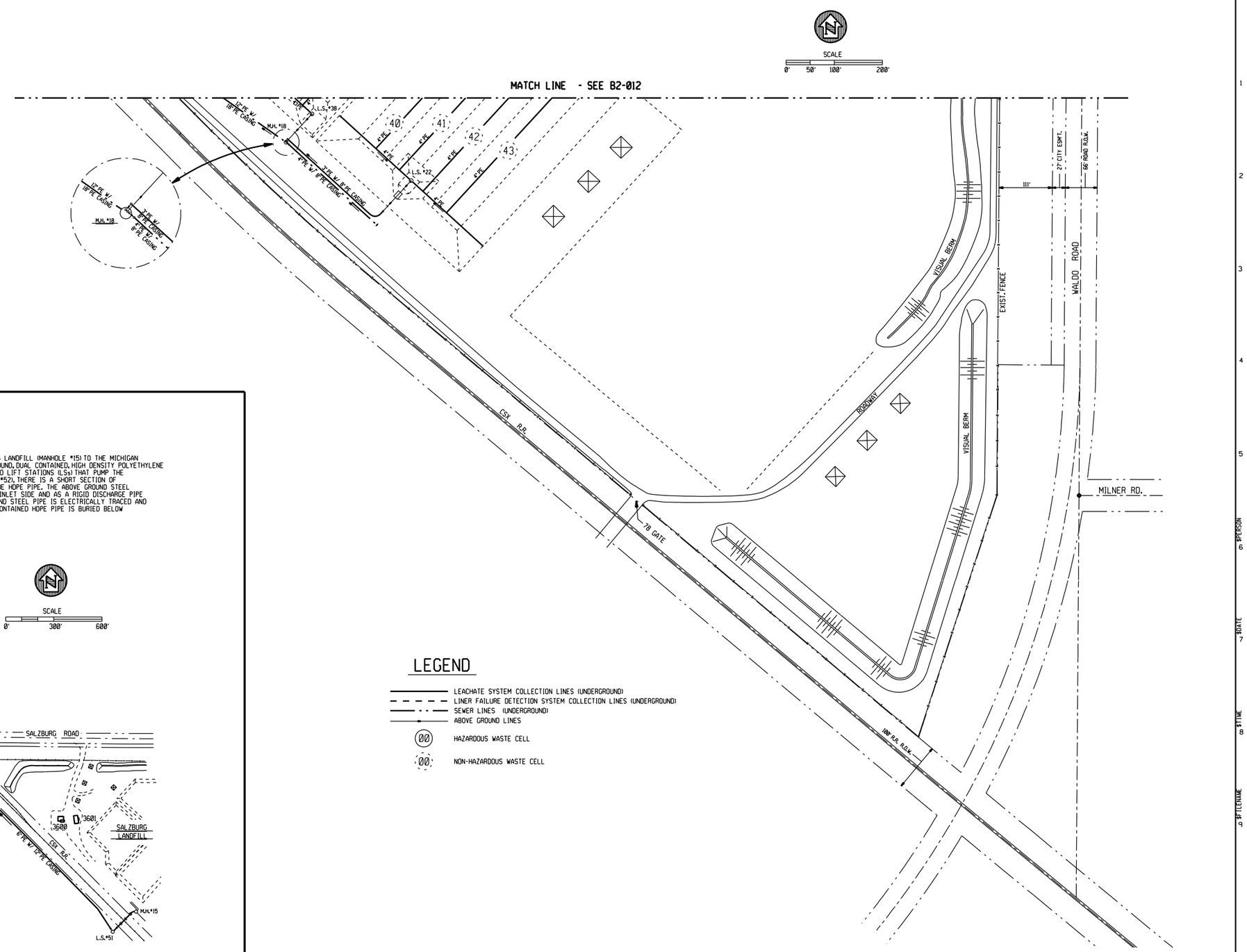

LEGEND

- LEACHATE SYSTEM COLLECTION LINES (UNDERGROUND)
- LINER FAILURE DETECTION SYSTEM COLLECTION LINES (UNDERGROUND)
- SEWER LINES (UNDERGROUND)
- ABOVE GROUND LINES
- Ø0 HAZARDOUS WASTE CELL
- Ø0 NON-HAZARDOUS WASTE CELL

REV. MARK	REVISION	BY	CHK	APP	DATE
A	ADDED NOTE REGARDING PIPELINE FROM SLF TO WWTP	LEG	JJA	JJA	10/08

REV. MARK	REVISION	BY	CHK	APP	DATE

DRAWING ISSUE RECORD

ISSUE NO.	REV	MATERIAL OR JOB SPEC	BID	FAB	CONST	REF
			DATE ISSUED FOR			

DESIGNED	J.J. ALLEN	11/05
DRAWN	L.E. GIRARDIN	11/05
CHECKED	J.J.A.	11/05
APPROVED	J.J.A.	11/05
PROJ. ENGR.	J.J. ALLEN	11/05
MFG. REP.	STEVE LUCAS	11/05

STATUS
P.E. SEAL
PLANT NO.

THE DOW CHEMICAL COMPANY

MICHIGAN DIVISION — MIDLAND, MICHIGAN

SALZBURG LANDFILL — 3600 BLDG

FIGURE 11.P-6
SITE SEWERS & SAMPLING POINTS MAP
(SHEET 2 OF 2)

EJN NUMBER	SCALE		REV.
114291	1" = 100'-0"	B2-105-1374	A

2 PLN

PRINTED — VER.

INSTRUCTIONS — $FILENAME — $TIME — $DATE — $PERSON

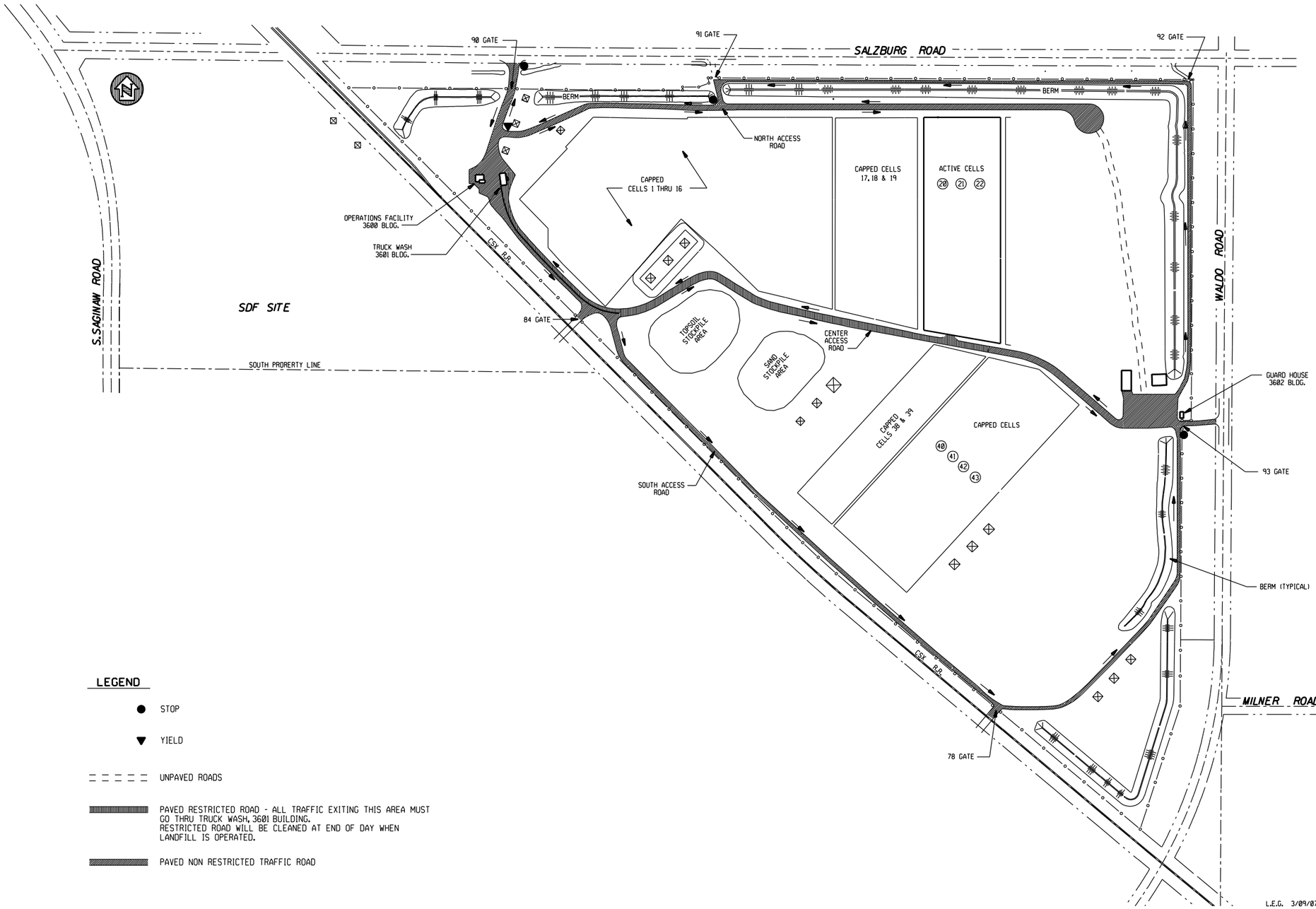

LEGEND

- ● STOP
- ▼ YIELD
- UNPAVED ROADS
- PAVED RESTRICTED ROAD - ALL TRAFFIC EXITING THIS AREA MUST GO THRU TRUCK WASH, 3601 BUILDING. RESTRICTED ROAD WILL BE CLEANED AT END OF DAY WHEN LANDFILL IS OPERATED.
- PAVED NON RESTRICTED TRAFFIC ROAD

REV. MARK	REVISION	BY	CHK	APP	DATE	REV. MARK	REVISION	BY	CHK	APP	DATE

DRAWING ISSUE RECORD

ISSUE NO.	REV	MATERIAL OR JOB SPEC	BID	FAB	CONST	REF
			DATE ISSUED FOR			

DESIGNED	J.J. ALLEN	3/9/07
DRAWN	L.E. GIRARDIN	3/9/07
CHECKED	J.J.A.	3/9/07
APPROVED	J.J.A.	3/9/07
PROJ. ENGR.	J.J. ALLEN	3/9/07
MFG. REP.	STEVE LUCAS	3/9/07

STATUS | PLANT NO.
P.E. SEAL

THE DOW CHEMICAL COMPANY
MICHIGAN DIVISION — MIDLAND, MICHIGAN
SALZBURG LANDFILL — 3600 BLDG.

TRAFFIC AND ACCESS CONTROL MAP

EJN NUMBER	SCALE		REV.
114291	1" = 200'-0"	B2-106-1374	2

PRINTED | VER. | PLN

$INSTRUCTIONS $DATE $TIME $FILENAME $PERSON

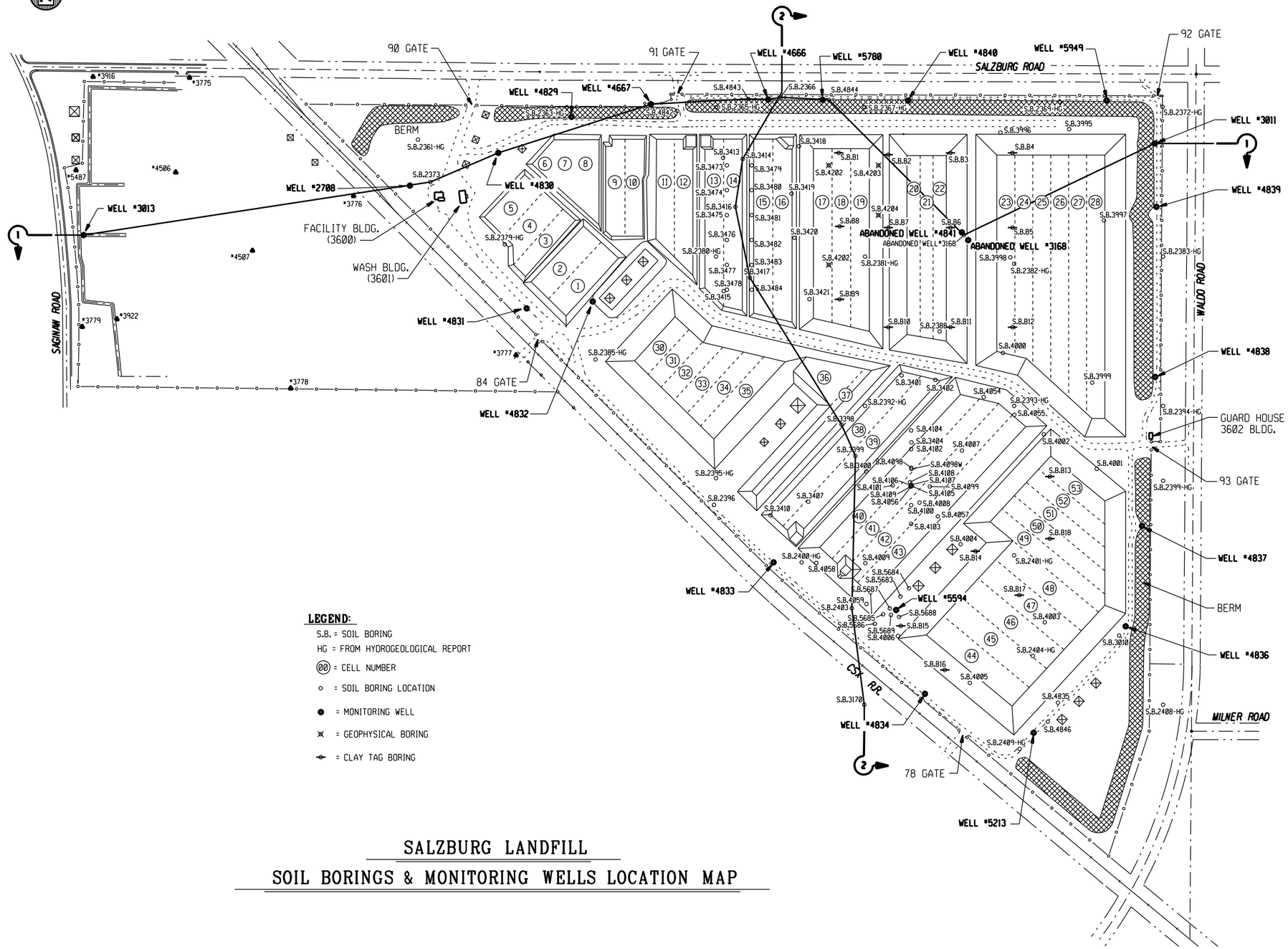

LEGEND:

S.B. = SOIL BORING

HG = FROM HYDROGEOLOGICAL REPORT

(00) = CELL NUMBER

○ = SOIL BORING LOCATION

● = MONITORING WELL

⊠ = GEOPHYSICAL BORING

⊸ = CLAY TAG BORING

SALZBURG LANDFILL

SOIL BORINGS & MONITORING WELLS LOCATION MAP

REV. MARK	REVISION	BY	CHK	APP	DATE	REV. MARK	REVISION	BY	CHK	APP	DATE

DRAWING ISSUE RECORD

ISSUE NO.	REV	MATERIAL OR JOB SPEC	BID	FAB	CONST	REF
			DATE ISSUED FOR			

DESIGNED	J.J. ALLEN	6/05
DRAWN	L.E. GIRARDIN	6/05
CHECKED	J.J.A.	6/05
APPROVED	J.J.A.	6/05
PROJ. ENGR.	J.J. ALLEN	6/05
MFG. REP.		

STATUS | PLANT NO.

P.E. SEAL

THE DOW CHEMICAL COMPANY

MICHIGAN DIVISION — MIDLAND, MICHIGAN

SALZBURG LANDFILL — 3600 BLDG

FIGURE III-4

SLF BORINGS & MONITORING WELLS

EJN NUMBER	SCALE		REV.
114291	1"= 200'-0"	B2-107-1374	

PRINTED | VER.

2 PLN

$INSTRUCTIONS $FILENAME $TIME $DATE $PERSON

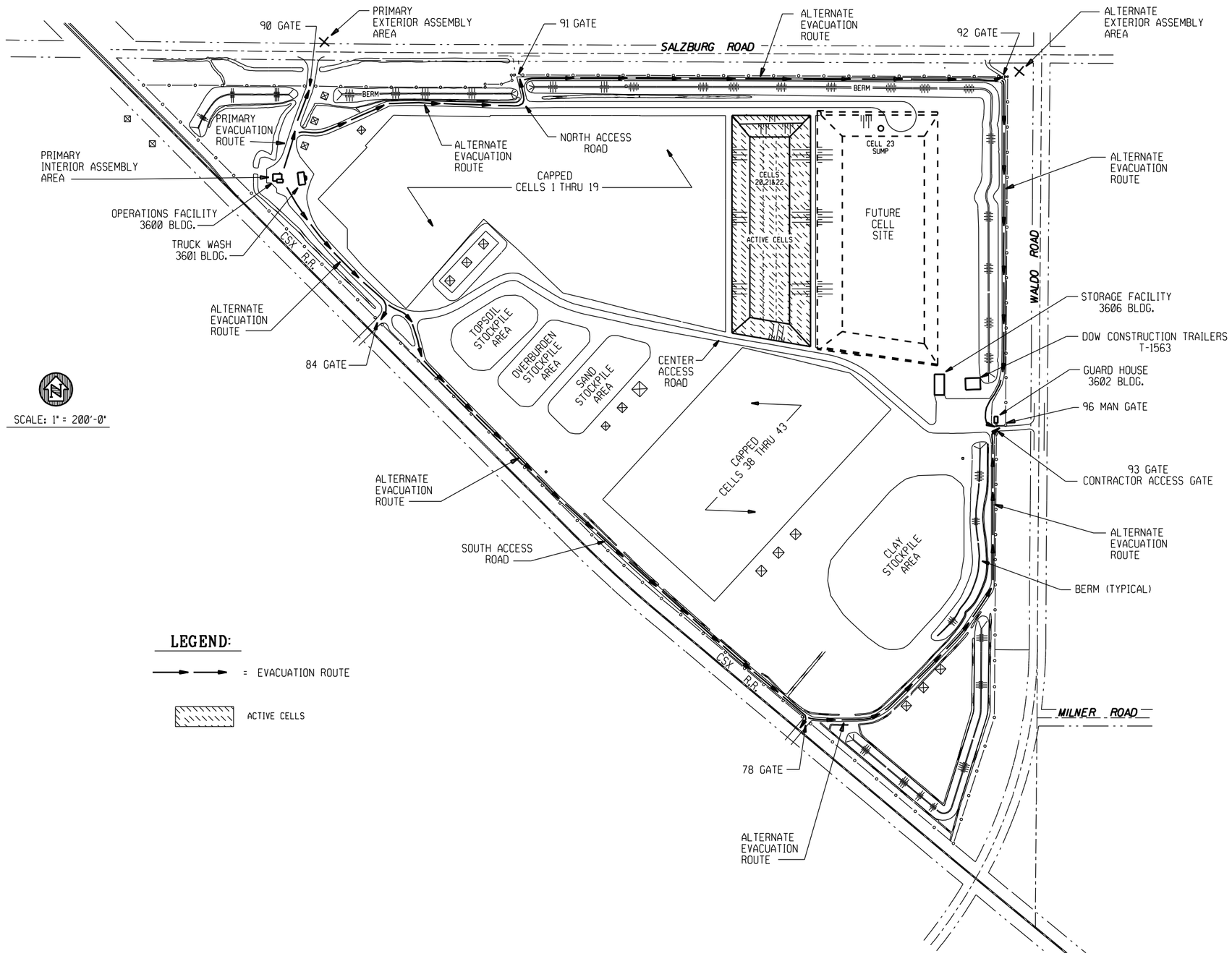

REV. MARK	REVISION	BY	CHK	APP	DATE	REV. MARK	REVISION	BY	CHK	APP	DATE

DRAWING ISSUE RECORD

ISSUE NO.	REV	MATERIAL OR JOB SPEC	BID	FAB	CONST	REF
			DATE ISSUED FOR			

DESIGNED	RICK GAINES	6/08
DRAWN	L.E. GIRARDIN	6/08
CHECKED	R.G.	6/08
APPROVED	R.G.	6/08
PROJ. ENGR.	J.J.A.	6/08
MFG. REP.	RICK GAINES	6/08

STATUS | PLANT NO.
P.E. SEAL

THE DOW CHEMICAL COMPANY
MICHIGAN DIVISION — MIDLAND, MICHIGAN
SALZBURG LANDFILL — 3600 BLDG.

EVACUATION ROUTES

JOB NUMBER	SCALE		REV.
945002	1" = 200'-0"	B2-108-1374	2 PLN

PRINTED | VER.

$PERSON
$DATE
$TIME
$FILENAME
$INSTRUCTIONS

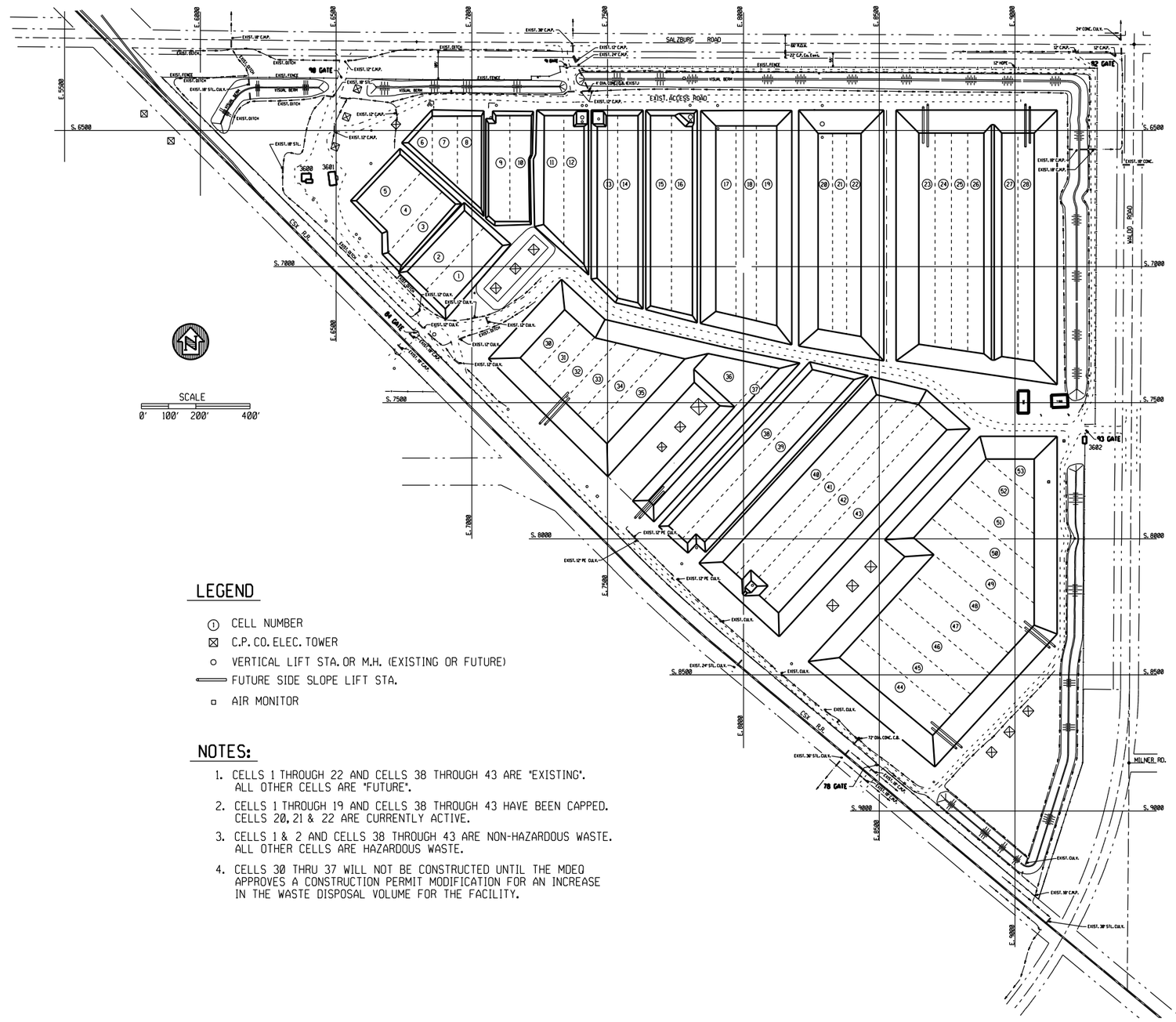

LEGEND

- ① CELL NUMBER
- ⊠ C.P. CO. ELEC. TOWER
- ○ VERTICAL LIFT STA. OR M.H. (EXISTING OR FUTURE)
- ═══ FUTURE SIDE SLOPE LIFT STA.
- ▫ AIR MONITOR

NOTES:

1. CELLS 1 THROUGH 22 AND CELLS 38 THROUGH 43 ARE "EXISTING". ALL OTHER CELLS ARE "FUTURE".
2. CELLS 1 THROUGH 19 AND CELLS 38 THROUGH 43 HAVE BEEN CAPPED. CELLS 20, 21 & 22 ARE CURRENTLY ACTIVE.
3. CELLS 1 & 2 AND CELLS 38 THROUGH 43 ARE NON-HAZARDOUS WASTE. ALL OTHER CELLS ARE HAZARDOUS WASTE.
4. CELLS 30 THRU 37 WILL NOT BE CONSTRUCTED UNTIL THE MDEQ APPROVES A CONSTRUCTION PERMIT MODIFICATION FOR AN INCREASE IN THE WASTE DISPOSAL VOLUME FOR THE FACILITY.

REV. MARK	REVISION	BY	CHK	APP	DATE
A	REVISED CONFIGURATION OF CELLS 23 THRU 28 AND CELLS 44 THRU 53 - ALSO ADDED INTERMEDIATE DIKE IN CELLS 23 THRU 28	LEG	JJA	JJA	2/08
B	REVISED TO NOTE CELLS 30 THRU 37 WILL NOT BE BUILT UNTIL CONSTRUCTION PERMIT VOLUME MOD IS APPROVED	LEG	JJA	JJA	9/08

REV. MARK	REVISION	BY	CHK	APP	DATE

DRAWING ISSUE RECORD

ISSUE NO.	REV	MATERIAL OR JOB SPEC	BID	FAB	CONST	REF
			DATE ISSUED FOR			

DESIGNED	J.J. ALLEN	11/05
DRAWN	L.E. GIRARDIN	11/05
CHECKED	J.J.A.	11/05
APPROVED	J.J.A.	11/05
PROJ. ENGR.	J.J. ALLEN	11/05
MFG. REP.	STEVE LUCAS	11/05

STATUS
P.E. SEAL
PLANT NO.

THE DOW CHEMICAL COMPANY
MICHIGAN DIVISION — MIDLAND, MICHIGAN
SALZBURG LANDFILL — 3600 BLDG.

EXISTING & FUTURE CELL LAYOUT

EJN NUMBER	SCALE		REV.
114291	1" = 200'-0"	B2-001-1374	B

2 PLN

PRINTED
VER.

DATE
TIME
FILENAME
INSTRUCTIONS

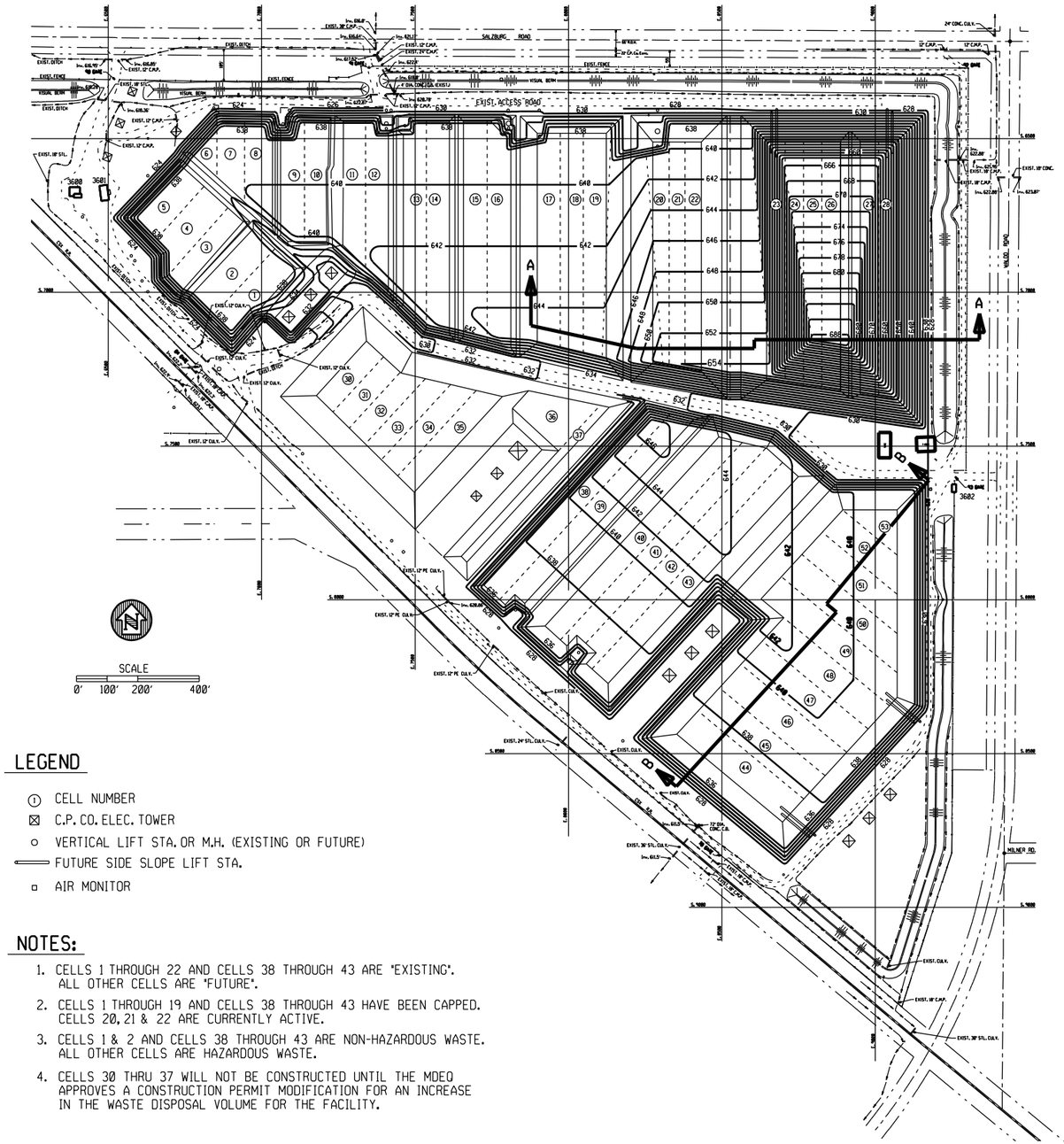

LEGEND

- (1) CELL NUMBER
- ⊠ C.P. CO. ELEC. TOWER
- ○ VERTICAL LIFT STA. OR M.H. (EXISTING OR FUTURE)
- FUTURE SIDE SLOPE LIFT STA.
- ▫ AIR MONITOR

NOTES:

1. CELLS 1 THROUGH 22 AND CELLS 38 THROUGH 43 ARE "EXISTING". ALL OTHER CELLS ARE "FUTURE".
2. CELLS 1 THROUGH 19 AND CELLS 38 THROUGH 43 HAVE BEEN CAPPED. CELLS 20, 21 & 22 ARE CURRENTLY ACTIVE.
3. CELLS 1 & 2 AND CELLS 38 THROUGH 43 ARE NON-HAZARDOUS WASTE. ALL OTHER CELLS ARE HAZARDOUS WASTE.
4. CELLS 30 THRU 37 WILL NOT BE CONSTRUCTED UNTIL THE MDEQ APPROVES A CONSTRUCTION PERMIT MODIFICATION FOR AN INCREASE IN THE WASTE DISPOSAL VOLUME FOR THE FACILITY.

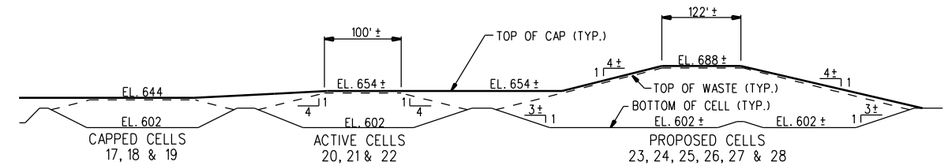

SECTION A-A (LOOKING NORTH)

NO SCALE

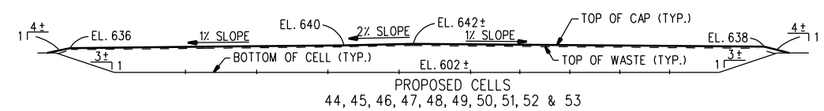

SECTION B-B (LOOKING NORTHWEST)

NO SCALE

REV. MARK	REVISION	BY	CHK	APP	DATE
A	REVISED CONFIGURATION OF CAPS FOR CELLS 23 THRU 28 AND CELLS 44 THRU 53	LEG	JJA	JJA	2/08
B	REVISED TO NOTE CELLS 30 THRU 37 WILL NOT BE BUILT UNTIL CONSTRUCTION PERMIT VOLUME MOD IS APPROVED. ALSO REVISED CELLS 44 THRU 53 CAP ELEVS SO ACTUAL STORAGE VOLUME EQUALS CURRENT LICENSE VOLUME.	LEG	JJA	JJA	9/08

REV. MARK	REVISION	BY	CHK	APP	DATE

DRAWING ISSUE RECORD

ISSUE NO.	REV	MATERIAL OR JOB SPEC	BID	FAB	CONST	REF
			DATE ISSUED FOR			

DESIGNED	J.J. ALLEN	11/05
DRAWN	L.E. GIRARDIN	11/05
CHECKED	J.J.A.	11/05
APPROVED	J.J.A.	11/05
PROJ. ENGR.	J.J. ALLEN	11/05
MFG. REP.	STEVE LUCAS	11/05

STATUS | PLANT NO.
P.E. SEAL

THE DOW CHEMICAL COMPANY
MICHIGAN DIVISION — MIDLAND, MICHIGAN
SALZBURG LANDFILL — 3600 BLDG.

EXISTING & FUTURE CAPPING LAYOUT

EJN NUMBER	SCALE		REV.
114291	1" = 200'-0"	B2-002-1374	B

2 PLN

PRINTED | VER.

LEGEND:

CCL = COMPACTED CLAY LINER

GCL = GEOSYNTHETIC CLAY LINER

GDM-DB = GEOCOMPOSITE DRAINAGE MATERIAL DOUBLE BONDED (GTX BOTH SIDES)

GDM-SB = GEOCOMPOSITE DRAINAGE MATERIAL SINGLE BONDED (GTX ONE SIDE)

GMB = GEOMEMBRANE

GNT = GEONET

GTX = GEOTEXTILE (SEPARATOR)

HDPE = HIGH DENSITY POLYETHYLENE

LS = LIFT STATION

MH = MANHOLE

PERF = PERFORATED

GENERAL NOTES:

1. THE TERM "LINER SYSTEM" ON THIS DRAWING REFERS TO ALL SOIL & GEOSYNTHETIC COMPONENTS OF THE PRIMARY & SECONDARY LINERS

2. ALL ELEVATIONS ARE ON USGS DATUM

3. THE INTERMEDIATE DIKE WILL BE CONSTRUCTED TO A ELEVATION THAT WILL FACILITATE A 100 YEAR, 24 HOUR STORM WITH 2 FEET OF FREEBOARD, AND WITH THE PHASE 1 WASTE LIFTS A, B AND C IN PLACE

4. MATERIAL SPECIFICATIONS - THE FOLLOWING ARE THE CURRENT MATERIAL SPECIFICATIONS USED IN THE CONSTRUCTION OF THE LANDFILL CELLS AND CAPS. THEY WILL BE UPDATED TO MEET CHANGES IN THE REGULATORY REQUIREMENTS AND/OR IF BETTER MATERIALS OF CONSTRUCTION BECOME AVAILABLE.

COMPACTED CLAY LINER - CCL WILL BE CH OR CL SOIL COMPACTED INTO A HOMOGENOUS LINER WITH A MAXIMUM PERMEABILITY OF 1 X 10-7 CM/SEC

GEOSYNTHETIC CLAY LINER - GCL WILL HAVE 0.75 PSF OF BENTONITE CLAY ENCASED BETWEEN TWO 6 OZ/SY NON-WOVEN, NEEDLEPUNCHED GTX. THE GCL WILL ALSO BE NEEDLEPUNCHED FOR REINFORCEMENT

GEOCOMPOSITE DRAINAGE MATERIAL - GDM-DB & GDM-SB WILL HAVE A GEONET CORE COMPOSED OF HDPE AND A 6 OZ/SY NON-WOVEN, NEEDLEPUNCHED GTX BONDED TO ONE OR BOTH SIDES, AS APPLICABLE. THE TRANSMISSIVITY REQUIRED FOR EACH GDM USED IN THE CAP AND CELL CONSTRUCTION WILL BE DESIGNATED IN THE DESIGN SPECIFICATIONS.

GEOMEMBRANE - GMB WILL ALL BE HDPE AND OF THE THICKNESSES SHOWN ON THE DRAWINGS. THEY WILL ALL BE TEXTURED BOTH SIDES AND WHITE ONE SIDE, WITH THE WHITE SIDE INSTALLED FACING UP

GEOTEXTILE (SEPARATOR) - GTX WILL 6 OZ/SY NON-WOVEN, NEEDLEPUNCHED MATERIAL

DRAINAGE MEDIA FOR THE LEACHATE COLLECTION SYSTEM WILL BE GRANULAR MATERIAL HAVING A MINIMUM PERMEABILITY OF 1 X 10-2 CM/SEC

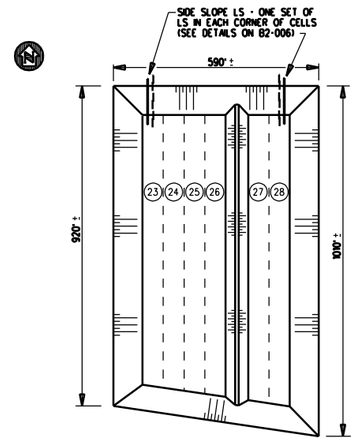

CELLS 23 THRU 28 OVERALL PLAN VIEW

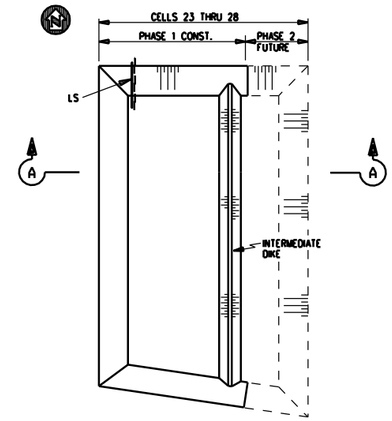

CELLS 23 THRU 28
PHASE 1 CONSTRUCTION

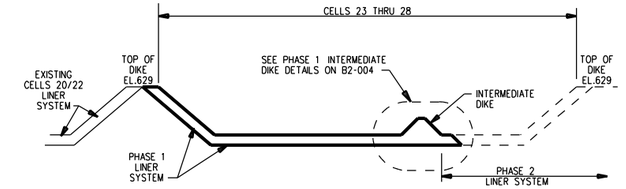

SECTION A-A
PHASE 1 CONSTRUCTION

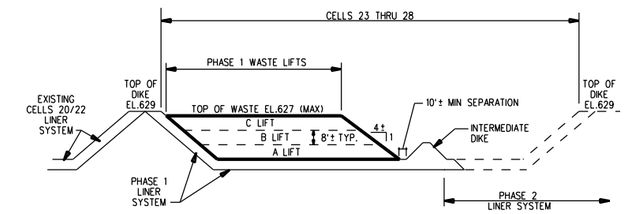

SECTION A-A
PHASE 1 WASTE PLACEMENT

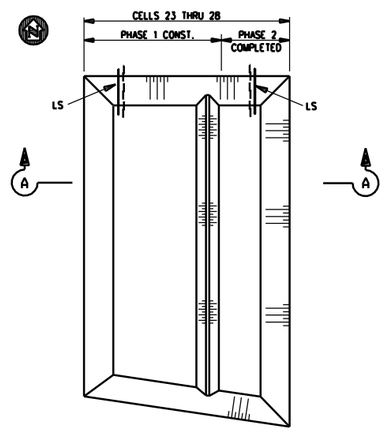

CELLS 23 THRU 28
PHASE 2 CONSTRUCTION

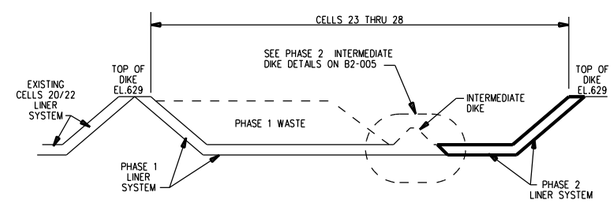

SECTION A-A
PHASE 2 CONSTRUCTION

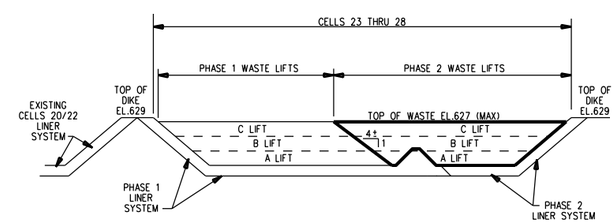

SECTION A-A
PHASE 2 WASTE PLACEMENT

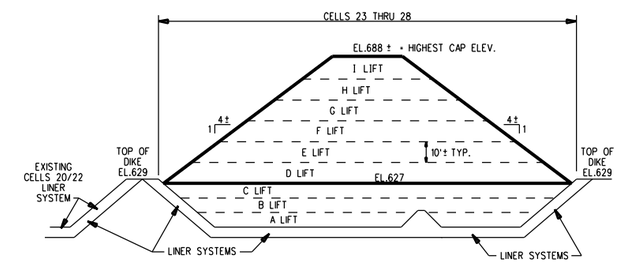

SECTION A-A
WASTE LIFTS ABOVE TOP OF DIKE ELEVATION

REV. MARK	REVISION	BY	CHK	APP	DATE
A	REVISED CONFIGURATION OF CELLS 23 THRU 28	LEG	JJA	JJA	2/08
B	DEFINED LINER SYSTEM IN GENERAL NOTES.	LEG	JJA	JJA	9/08

REV. MARK	REVISION	BY	CHK	APP	DATE

DRAWING ISSUE RECORD

ISSUE NO.	REV	MATERIAL OR JOB SPEC	BID	FAB	CONST	REF
			DATE ISSUED FOR			

DESIGNED	J.J. ALLEN	11/05
DRAWN	L.E. GIRARDIN	11/05
CHECKED	J.J.A.	11/05
APPROVED	J.J.A.	11/05
PROJ. ENGR.	J.J. ALLEN	11/05
MFG. REP.	STEVE LUCAS	11/05

STATUS | PLANT NO.
P.E. SEAL

THE DOW CHEMICAL COMPANY
MICHIGAN OPERATIONS — MIDLAND, MICHIGAN
SALZBURG LANDFILL — 3600 BLDG

CELLS 23-28 CONSTRUCTION-FILL SEQUENCE

EJN NUMBER	SCALE		REV.
114291	NONE	B2-003-1374	B

2 PLN

PRINTED | VER.

$PERSON
$DATE
$TIME
$FILENAME
$INSTRUCTIONS

LEGEND:

CCL = COMPACTED CLAY LINER

GCL = GEOSYNTHETIC CLAY LINER

GDM-DB = GEOCOMPOSITE DRAINAGE MATERIAL DOUBLE BONDED (GTX BOTH SIDES)

GDM-SB = GEOCOMPOSITE DRAINAGE MATERIAL SINGLE BONDED (GTX ONE SIDE)

GMB = GEOMEMBRANE

GNT = GEONET

GTX = GEOTEXTILE (SEPARATOR)

HDPE = HIGH DENSITY POLYETHYLENE

LS = LIFT STATION

MH = MANHOLE

PERF = PERFORATED

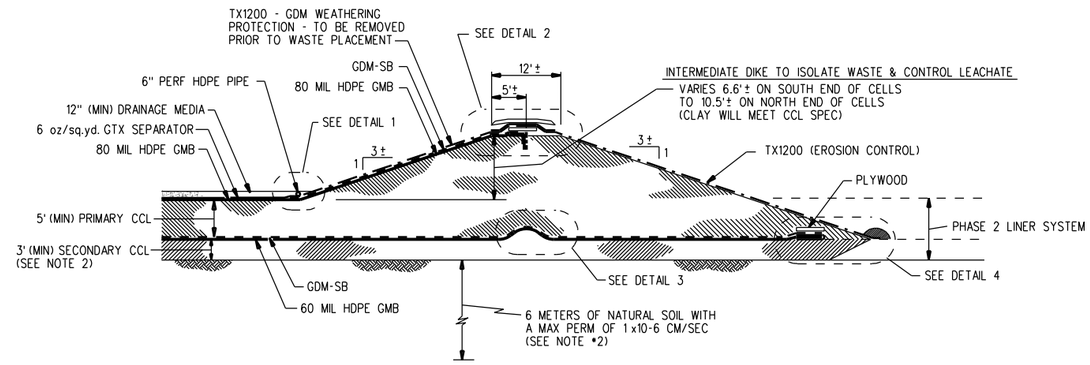

PHASE 1 INTERMEDIATE DIKE TYPICAL SECTION

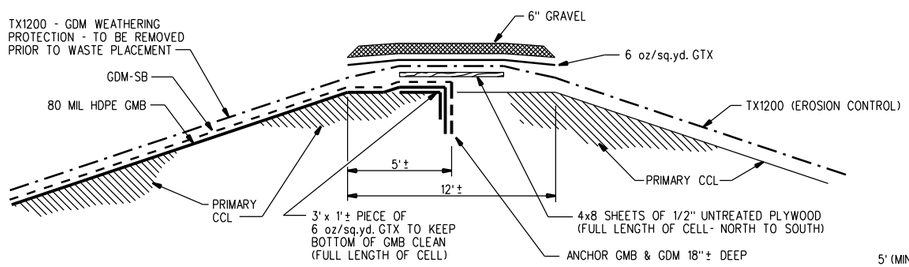

DETAIL 2

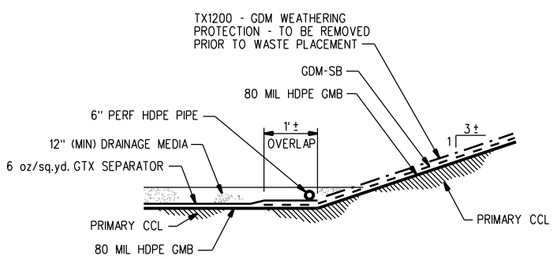

DETAIL 1

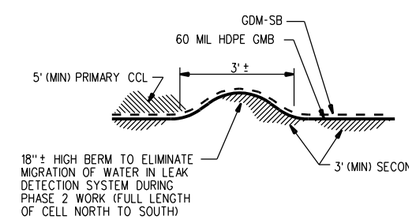

DETAIL 3

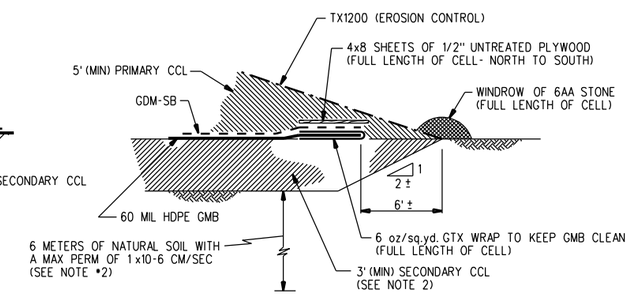

DETAIL 4

NOTES:

1. SEE DRAWING B2-005-1374 FOR PHASE 2 GMB & GDM EXTENSIONS

2. THE MDEQ WILL ALLOW AN ALTERNATIVE "EQUIVALENT" DESIGN FOR THE PART 111 REQUIRMENTS OF:
   - A 3 FOOT THICK COMPACTED CLAY SECONDARY (BOTTOM) LINER WITH A MAX PERMEABILITY OF 1 x10-7 CM/SEC, AND,
   - THE 6 METERS OF NATURAL SOILS WITH A MAX PERMEABILITY OF 1 x10-6 CM/SEC BELOW & LATERALLY TO THE BOTTOM LINER

   THE EQUIVALENT DESIGN IS A 23 FOOT THICK LAYER OF NATURAL SOILS IMMEDIATELY BELOW THE SECONDARY SYNTHETIC LINER (60 MIL HDPE GEOMEMBRANE) HAVING AN AVERAGE PERMEABILITY OF 4.57 x10-7 CM/SEC OR LESS

REV. MARK	REVISION	BY	CHK	APP	DATE
A	ADDED TX1200, GRAVEL & UNTREATED PLYWOOD PROTECTION FOR PHASE 1 GDM + GMB	LEG	JJA	JJA	2/08
B	ADDED EQUIVALENCY NOTE FOR THE 3' SECONDARY CCL AND THE 6 METERS OF 1 x10-6 CM/SEC NATURAL SOILS	LEG	JJA	JJA	9/08

REV. MARK	REVISION	BY	CHK	APP	DATE

DRAWING ISSUE RECORD

ISSUE NO.	REV	MATERIAL OR JOB SPEC	BID	FAB	CONST	REF

DATE ISSUED FOR

DESIGNED	J.J. ALLEN	11/05
DRAWN	L.E. GIRARDIN	11/05
CHECKED	J.J.A.	11/05
APPROVED	J.J.A.	11/05
PROJ. ENGR.	J.J. ALLEN	11/05
MFG. REP.	STEVE LUCAS	11/05

STATUS | PLANT NO.

P.E. SEAL

THE DOW CHEMICAL COMPANY

MICHIGAN OPERATIONS — MIDLAND, MICHIGAN

SALZBURG LANDFILL — 3600 BLDG

SALZBURG LANDFILL LICENSE DRAWING
CELLS 23-28 INTERMEDIATE DIKE DETAILS
PHASE 1

EJN NUMBER	SCALE		REV.
114291	NONE	B2-004-1374	B

2 PLN

PRINTED | VER.

$PERSON $DATE $TIME $FILENAME $INSTRUCTIONS

LEGEND:

CCL = COMPACTED CLAY LINER

GCL = GEOSYNTHETIC CLAY LINER

GDM-DB = GEOCOMPOSITE DRAINAGE MATERIAL DOUBLE BONDED (GTX BOTH SIDES)

GDM-SB = GEOCOMPOSITE DRAINAGE MATERIAL SINGLE BONDED (GTX ONE SIDE)

GMB = GEOMEMBRANE

GNT = GEONET

GTX = GEOTEXTILE (SEPARATOR)

HDPE = HIGH DENSITY POLYETHYLENE

LS = LIFT STATION

MH = MANHOLE

PERF = PERFORATED

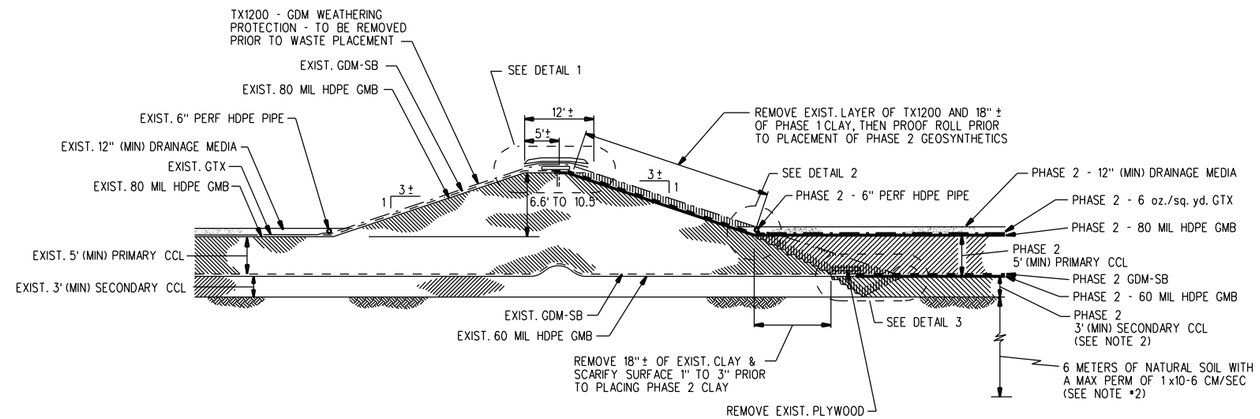

PHASE 2 INTERMEDIATE DIKE TYPICAL SECTION

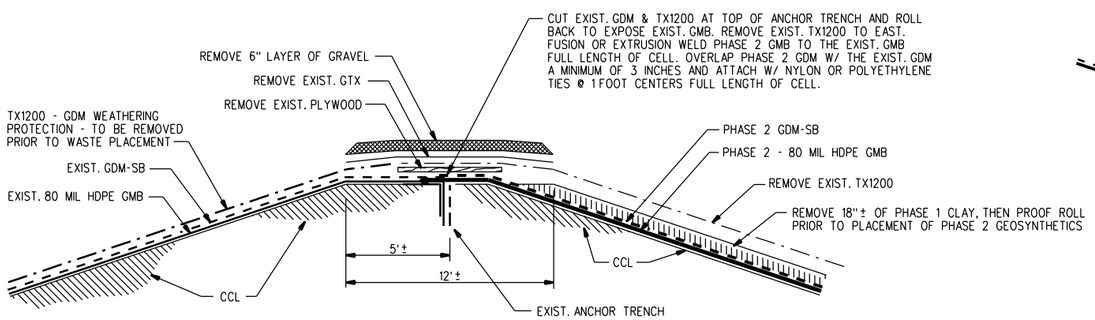

DETAIL 1

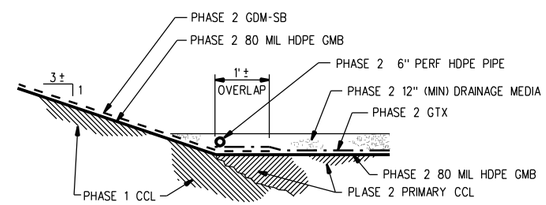

DETAIL 2

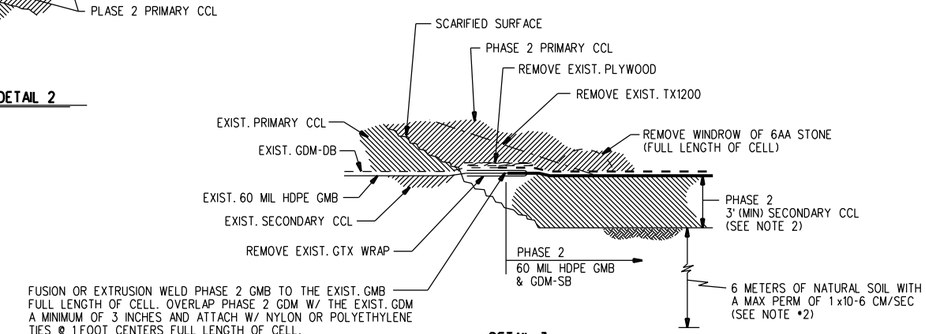

DETAIL 3

NOTES:

1. SEE DRAWING B2-004-1374 FOR PHASE 1 INTERMEDIATE DIKE INFO

2. THE MDEQ WILL ALLOW AN ALTERNATIVE "EQUIVALENT" DESIGN FOR THE PART 111 REQUIRMENTS OF:
   - A 3 FOOT THICK COMPACTED CLAY SECONDARY (BOTTOM) LINER WITH A MAX PERMEABILITY OF 1 x10-7 CM/SEC, AND,
   - THE 6 METERS OF NATURAL SOILS WITH A MAX PERMEABILITY OF 1 x10-6 CM/SEC BELOW & LATERALLY TO THE BOTTOM LINER

   THE EQUIVALENT DESIGN IS A 23 FOOT THICK LAYER OF NATURAL SOILS IMMEDIATELY BELOW THE SECONDARY SYNTHETIC LINER (60 MIL HDPE GEOMEMBRANE) HAVING AN AVERAGE PERMEABILITY OF 4.57 x10-7 CM/SEC OR LESS

REV. MARK	REVISION	BY	CHK	APP	DATE
A	ADDED CONNECTION DETAILS FOR PHASE 1 & PHASE 2 LINER SYSTEMS.	LEG	JJA	JJA	2/08
B	ADDED EQUIVALENCY NOTE FOR THE 3' SECONDARY CCL AND THE 6 METERS OF 1 x10-6 CM/SEC NATURAL SOILS	LEG	JJA	JJA	9/08

REV. MARK	REVISION	BY	CHK	APP	DATE

DRAWING ISSUE RECORD

ISSUE NO.	REV	MATERIAL OR JOB SPEC	BID	FAB	CONST	REF
			DATE ISSUED FOR			

DESIGNED	J.J. ALLEN	11/05
DRAWN	L.E. GIRARDIN	11/05
CHECKED	J.J.A.	11/05
APPROVED	J.J.A.	11/05
PROJ. ENGR.	J.J. ALLEN	11/05
MFG. REP.	STEVE LUCAS	11/05

STATUS | PLANT NO.

P.E. SEAL

THE DOW CHEMICAL COMPANY

MICHIGAN OPERATIONS — MIDLAND, MICHIGAN

SALZBURG LANDFILL — 3600 BLDG

SALZBURG LANDFILL LICENSE DRAWING
CELLS 23-28 INTERMEDIATE DIKE DETAILS
PHASE 2

EJN NUMBER	SCALE		REV.
114291	NONE	B2-005-1374	B

2 PLN

PRINTED | VER.

$PERSON $DATE $TIME $FILENAME $INSTRUCTIONS

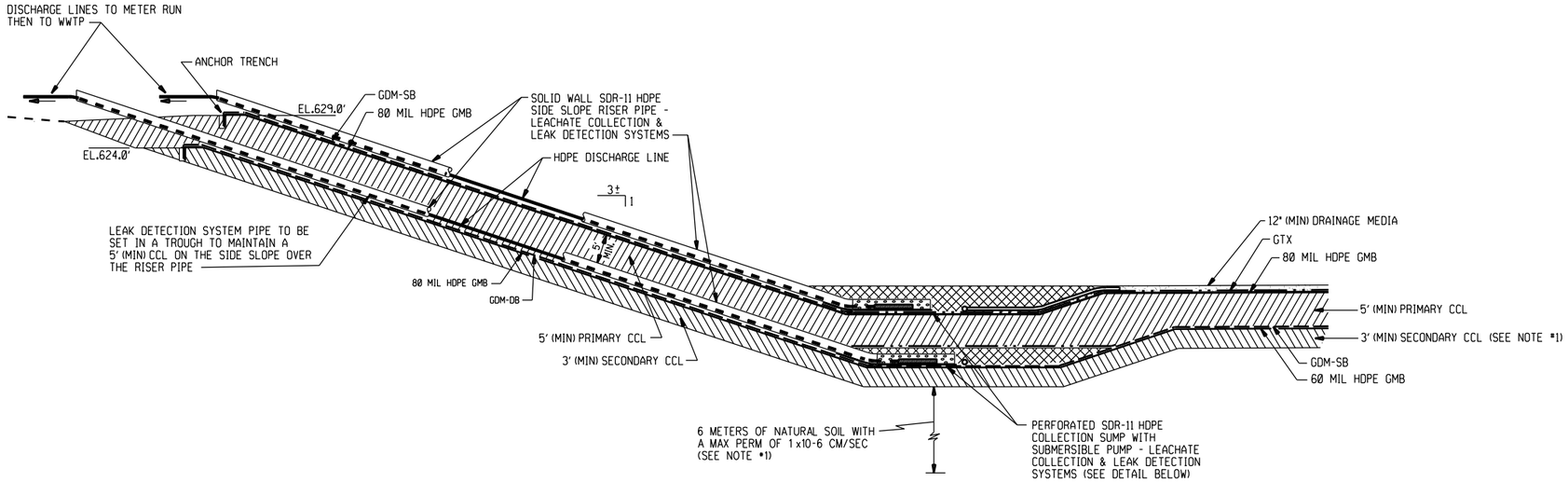

SIDE SLOPE LIFT STATION LAYOUT
SECTION LOOKING EAST

LEGEND:

CCL = COMPACTED CLAY LINER

GCL = GEOSYNTHETIC CLAY LINER

GDM-DB = GEOCOMPOSITE DRAINAGE MATERIAL DOUBLE BONDED (GTX BOTH SIDES)

GDM-SB = GEOCOMPOSITE DRAINAGE MATERIAL SINGLE BONDED (GTX ONE SIDE)

GMB = GEOMEMBRANE

GNT = GEONET

GTX = GEOTEXTILE (SEPARATOR)

HDPE = HIGH DENSITY POLYETHYLENE

LS = LIFT STATION

MH = MANHOLE

PERF = PERFORATED

NOTE:

1. THE MDEQ WILL ALLOW AN ALTERNATIVE "EQUIVALENT" DESIGN FOR THE PART 111 REQUIRMENTS OF:
   - A 3 FOOT THICK COMPACTED CLAY SECONDARY (BOTTOM) LINER WITH A MAX PERMEABILITY OF 1 x10-7 CM/SEC, AND,
   - THE 6 METERS OF NATURAL SOILS WITH A MAX PERMEABILITY OF 1 x10-6 CM/SEC BELOW & LATERALLY TO THE BOTTOM LINER

   THE EQUIVALENT DESIGN IS A 23 FOOT THICK LAYER OF NATURAL SOILS IMMEDIATELY BELOW THE SECONDARY SYNTHETIC LINER (60 MIL HDPE GEOMEMBRANE) HAVING AN AVERAGE PERMEABILITY OF 4.57 x10-7 CM/SEC OR LESS

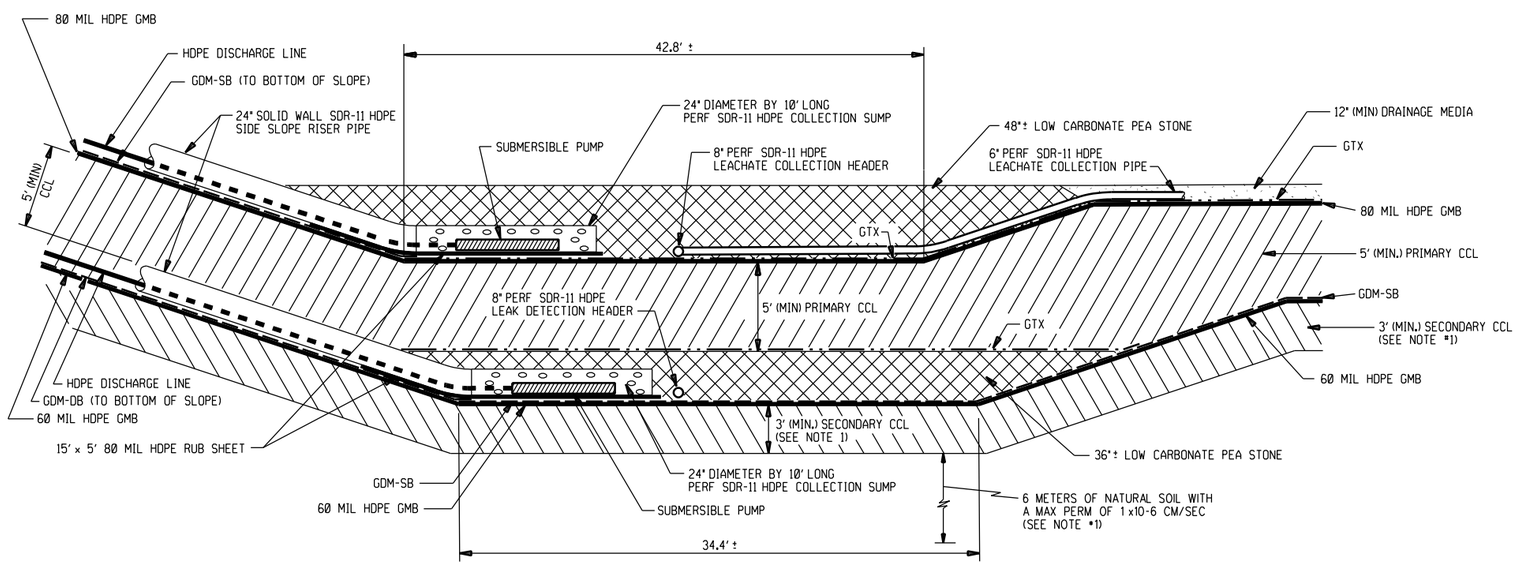

LIFT STATION PUMP AREA DETAILS

REV. MARK	REVISION	BY	CHK	APP	DATE
A	REVISED TO BE CONSISTENT WITH 2008 DESIGN TECHNOLOGY	LEG	JJA	JJA	2/08
B	REVISED TO SHOW LEACHATE COLLECTION & LEAK DETECTION PIPES	LEG	JJA	JJA	9/08
C	ADDED EQUIVALENCY NOTE FOR THE 3' SECONDARY CCL AND THE 6 METERS OF 1 x10-6 CM/SEC NATURAL SOILS	LEG	JJA	JJA	9/08

REV. MARK	REVISION	BY	CHK	APP	DATE

DRAWING ISSUE RECORD

ISSUE NO.	REV	MATERIAL OR JOB SPEC	BID	FAB	CONST	REF
			DATE ISSUED FOR			

DESIGNED	J.J. ALLEN	11/05
DRAWN	L.E. GIRARDIN	11/05
CHECKED	J.J.A.	11/05
APPROVED	J.J.A.	11/05
PROJ. ENGR.	J.J. ALLEN	11/05
MFG. REP.	STEVE LUCAS	11/05

STATUS | PLANT NO. | P.E. SEAL

THE DOW CHEMICAL COMPANY

MICHIGAN OPERATIONS — MIDLAND, MICHIGAN

SALZBURG LANDFILL — 3600 BLDG

SIDE SLOPE LIFT STATION DETAILS

EJN NUMBER	SCALE		REV.
114291	NONE	B2-006-1374	C

2 PLN

PRINTED | VER.

$INSTRUCTIONS $FILENAME $TIME $DATE $PERSON

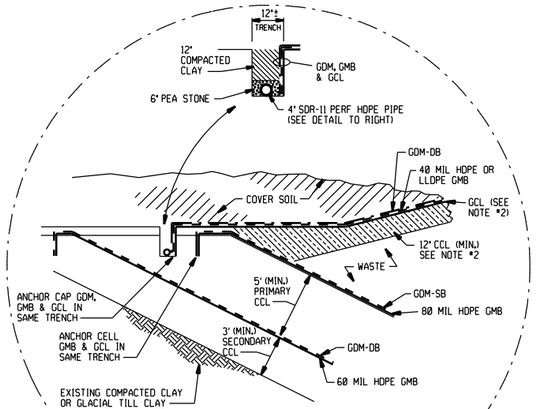

TYPICAL WEST CAP - CELL INTERSECTION DETAIL
(TYPICAL FOR EAST SIDE ALSO)

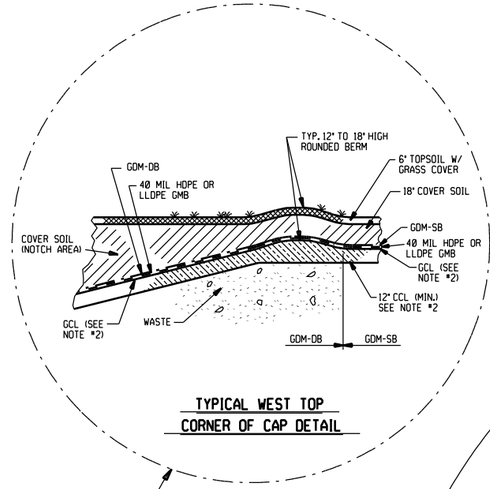

TYPICAL WEST TOP CORNER OF CAP DETAIL

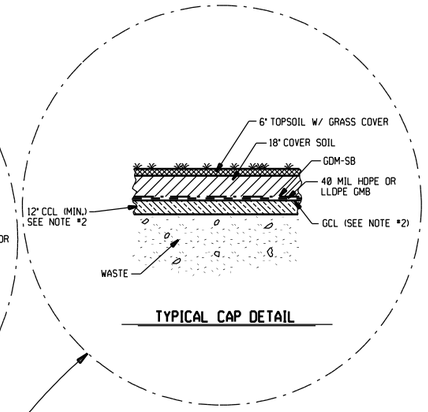

TYPICAL CAP DETAIL

NOTE:

1. THE MDEQ WILL ALLOW AN ALTERNATIVE "EQUIVALENT" DESIGN FOR THE PART 111 REQUIRMENTS OF:
   - A 3 FOOT THICK COMPACTED CLAY SECONDARY (BOTTOM) LINER WITH A MAX PERMEABILITY OF 1 x10-7 CM/SEC, AND,
   - THE 6 METERS OF NATURAL SOILS WITH A MAX PERMEABILITY OF 1 x10-6 CM/SEC BELOW & LATERALLY TO THE BOTTOM LINER

   THE EQUIVALENT DESIGN IS A 23 FOOT THICK LAYER OF NATURAL SOILS IMMEDIATELY BELOW THE SECONDARY SYNTHETIC LINER (60 MIL HDPE GEOMEMBRANE) HAVING AN AVERAGE PERMEABILITY OF 4.57 x10-7 CM/SEC OR LESS

2. THE MDEQ WILL ALLOW A GCL TO BE SUBSTITUTED FOR 2 FEET OF THE PART 111 REQUIRED 3 FOOT THICK COMPACTED CLAY CAP LINER IF EQUIVALENT ENVIRONMENTAL PROTECTION CAN BE DEMONSTRATED.

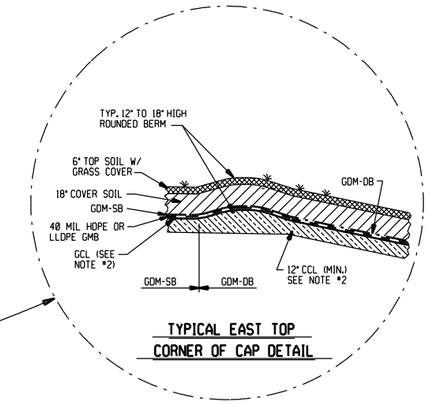

TYPICAL EAST TOP CORNER OF CAP DETAIL

LEGEND:

CCL = COMPACTED CLAY LINER

GCL = GEOSYNTHETIC CLAY LINER

GDM-DB = GEOCOMPOSITE DRAINAGE MATERIAL DOUBLE BONDED (GTX BOTH SIDES)

GDM-SB = GEOCOMPOSITE DRAINAGE MATERIAL SINGLE BONDED (GTX ONE SIDE)

GMB = GEOMEMBRANE

GNT = GEONET

GTX = GEOTEXTILE (SEPARATOR)

HDPE = HIGH DENSITY POLYETHYLENE

LLDPE = LINEAR LOW DENSITY POLYETHYLENE

LS = LIFT STATION

MH = MANHOLE

PERF = PERFORATED

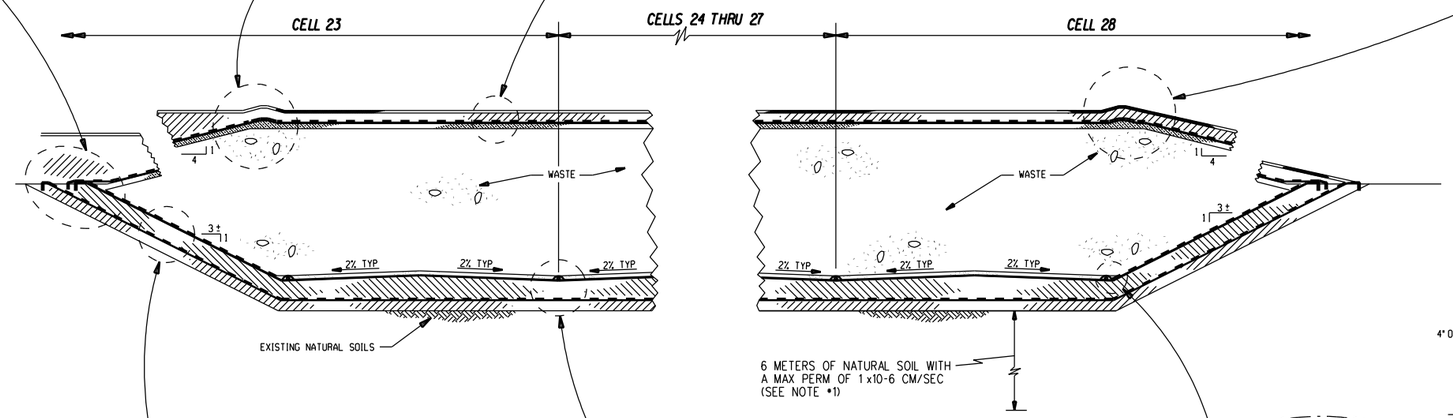

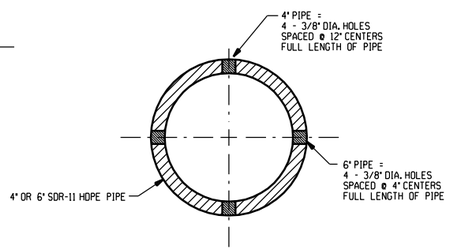

4" OR 6" PERFORATED HDPE COLLECTION PIPE (SDR-11)

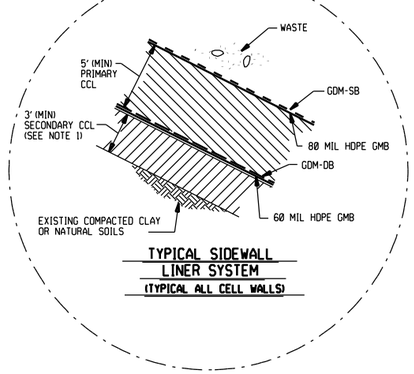

TYPICAL SIDEWALL LINER SYSTEM
(TYPICAL ALL CELL WALLS)

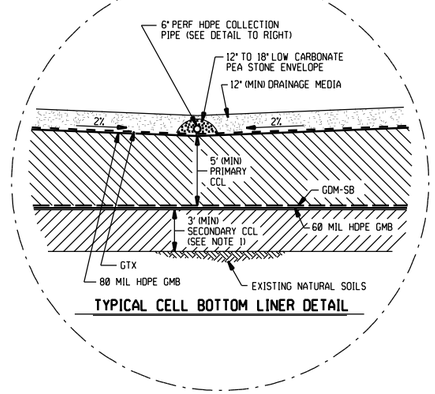

TYPICAL CELL BOTTOM LINER DETAIL

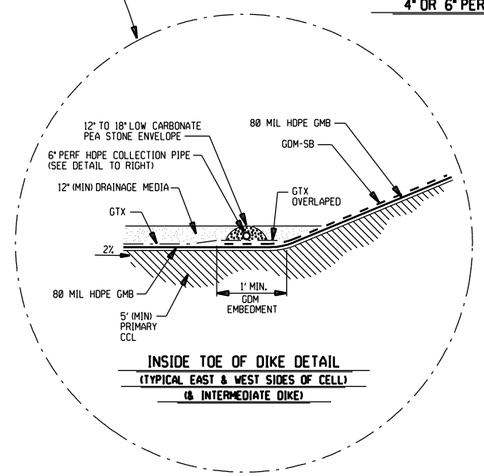

INSIDE TOE OF DIKE DETAIL
(TYPICAL EAST & WEST SIDES OF CELL)
(& INTERMEDIATE DIKE)

TYPICAL CELL & CAP EAST-WEST CROSS SECTION W/ LINER DETAILS

REV. MARK	REVISION	BY	CHK	APP	DATE
A	REVISED TO BE CONSISTENT WITH 2008 DESIGN TECHNOLOGY	LEG	JJA	JJA	2/08
B	REVISED TO SHOW 12" CCL UNDER GCL IN CAPPING SECTIONS	LEG	JJA	JJA	9/08
C	ADDED EQUIVALENCY NOTE FOR THE 3' SECONDARY CCL AND THE 6 METERS OF 1 x10-6 CM/SEC NATURAL SOILS	LEG	JJA	JJA	9/08
D	ADDED EQUIVALENCY NOTE FOR SUBSTITUTION OF A GCL FOR 2' OF THE 3' CAP CCL	LEG	JJA	JJA	9/08
E	ADDED LINEAR LOW DENSITY POLYETHYLENE AS POSSIBLE CAP GEOMEMBRANE	LEG	JJA	JJA	10/08

REV. MARK	REVISION	BY	CHK	APP	DATE

DRAWING ISSUE RECORD

ISSUE NO.	REV	MATERIAL OR JOB SPEC	BID	FAB	CONST	REF
			DATE ISSUED FOR			

DESIGNED	J.J. ALLEN	11/05
DRAWN	L.E. GIRARDIN	11/05
CHECKED	J.J.A.	11/05
APPROVED	J.J.A.	11/05
PROJ. ENGR.	J.J. ALLEN	11/05
MFG. REP.	STEVE LUCAS	11/05

STATUS | PLANT NO.
P.E. SEAL

THE DOW CHEMICAL COMPANY
MICHIGAN DIVISION — MIDLAND, MICHIGAN
SALZBURG LANDFILL — 3600 BLDG.

APPENDIX 15
CELLS 23-28 EAST-WEST CROSS SECTION

EJN NUMBER	SCALE		REV.
114291	NONE	B2-007-1374	E

2 UND

PRINTED | VER.

$INSTRUCTIONS $FILENAME $TIME $DATE $PERSON

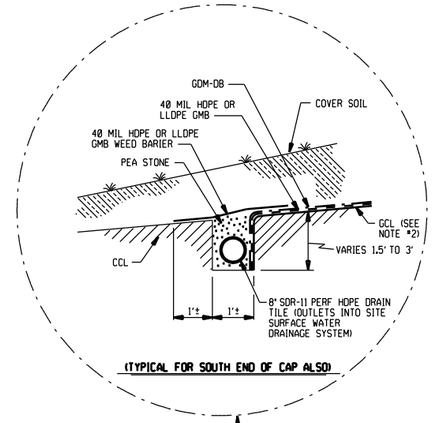

(TYPICAL FOR SOUTH END OF CAP ALSO)

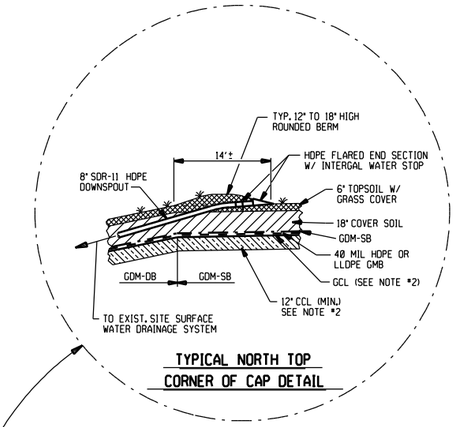

TYPICAL NORTH TOP CORNER OF CAP DETAIL

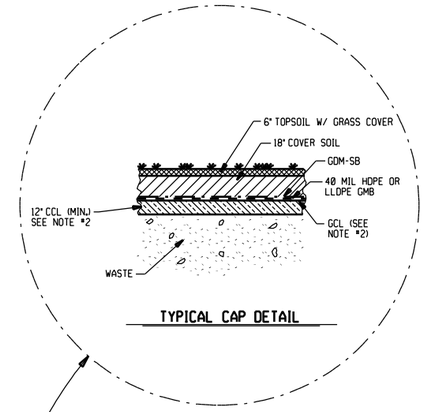

TYPICAL CAP DETAIL

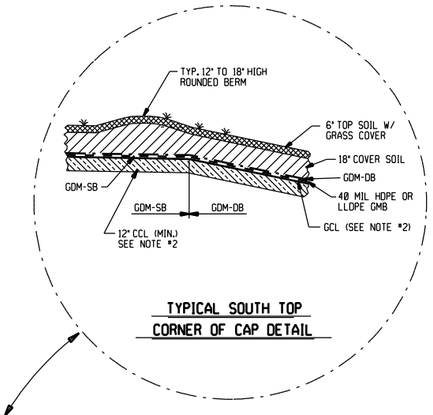

TYPICAL SOUTH TOP CORNER OF CAP DETAIL

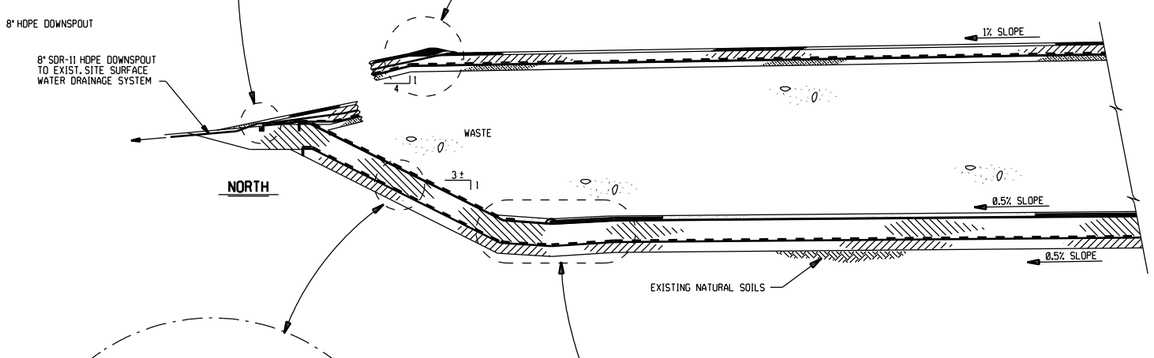

NORTH

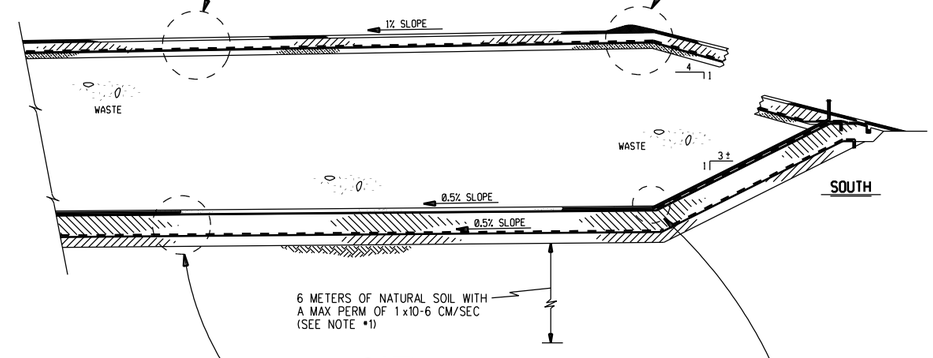

SOUTH

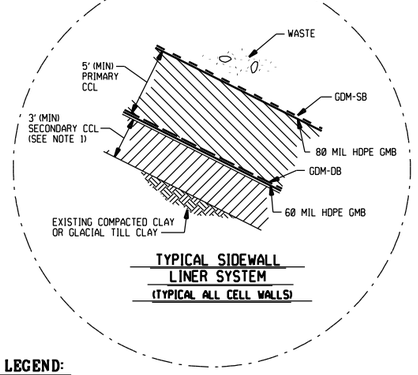

TYPICAL SIDEWALL LINER SYSTEM
(TYPICAL ALL CELL WALLS)

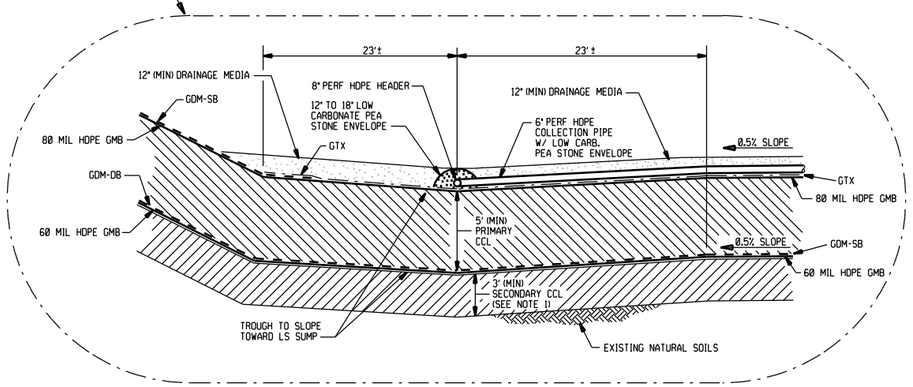

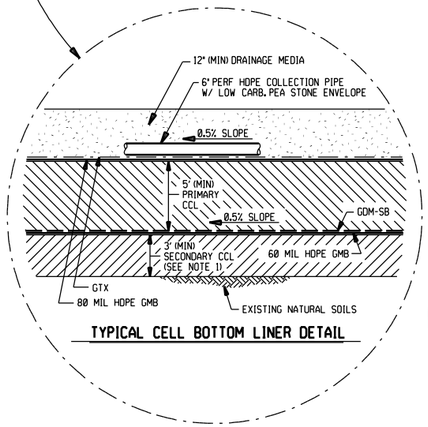

TYPICAL CELL BOTTOM LINER DETAIL

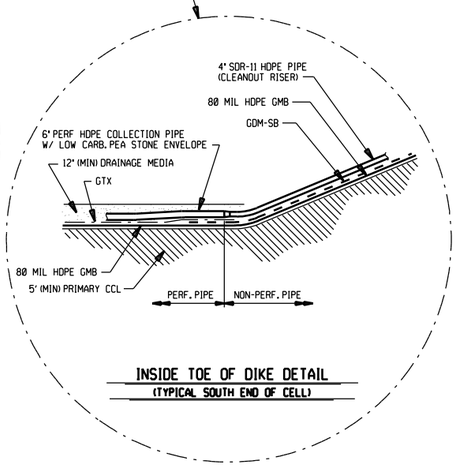

INSIDE TOE OF DIKE DETAIL
(TYPICAL SOUTH END OF CELL)

LEGEND:

SEE B2-007

NOTE:

1. THE MDEQ WILL ALLOW AN ALTERNATIVE "EQUIVALENT" DESIGN FOR THE PART 111 REQUIRMENTS OF:
   - A 3 FOOT THICK COMPACTED CLAY SECONDARY (BOTTOM) LINER WITH A MAX PERMEABILITY OF 1 x10-7 CM/SEC, AND,
   - THE 6 METERS OF NATURAL SOILS WITH A MAX PERMEABILITY OF 1 x10-6 CM/SEC BELOW & LATERALLY TO THE BOTTOM LINER

   THE EQUIVALENT DESIGN IS A 23 FOOT THICK LAYER OF NATURAL SOILS IMMEDIATELY BELOW THE SECONDARY SYNTHETIC LINER (60 MIL HDPE GEOMEMBRANE) HAVING AN AVERAGE PERMEABILITY OF 4.57 x10-7 CM/SEC OR LESS
2. THE MDEQ WILL ALLOW A GCL TO BE SUBSTITUTED FOR 2 FEET OF THE PART 111 REQUIRED 3 FOOT THICK COMPACTED CLAY CAP LINER IF EQUIVALENT ENVIRONMENTAL PROTECTION CAN BE DEMONSTRATED.

TYPICAL CELL & CAP NORTH-SOUTH CROSS SECTION W/ LINER DETAILS

REV. MARK	REVISION	BY	CHK	APP	DATE
A	REVISED TO BE CONSISTENT WITH 2008 DESIGN TECHNOLOGY	LEG	JJA	JJA	2/08
B	REVISED TO SHOW 12" CCL UNDER GCL IN CAPPING SECTIONS	LEG	JJA	JJA	9/08
C	ADDED EQUIVALENCY NOTE FOR THE 3' SECONDARY CCL AND THE 6 METERS OF 1 x10-6 CM/SEC NATURAL SOILS	LEG	JJA	JJA	9/08
D	ADDED EQUIVALENCY NOTE FOR SUBSTITUTION OF A GCL FOR 2' OF THE 3' CAP CCL	LEG	JJA	JJA	9/08
E	ADDED LINEAR LOW DENSITY POLYETHYLENE AS POSSIBLE CAP GEOMEMBRANE	LEG	JJA	JJA	10/08

REV. MARK	REVISION	BY	CHK	APP	DATE

DRAWING ISSUE RECORD

ISSUE NO.	REV	MATERIAL OR JOB SPEC	BID	FAB	CONST	REF
			DATE ISSUED FOR			

DESIGNED	J.J. ALLEN	11/05
DRAWN	L.E. GIRARDIN	11/05
CHECKED	J.J.A.	11/05
APPROVED	J.J.A.	11/05
PROJ. ENGR.	J.J. ALLEN	11/05
MFG. REP.	STEVE LUCAS	11/05

STATUS | PLANT NO.
P.E. SEAL

THE DOW CHEMICAL COMPANY
MICHIGAN DIVISION — MIDLAND, MICHIGAN
SALZBURG LANDFILL — 3600 BLDG.

APPENDIX 15
CELLS 23-28 NORTH-SOUTH CROSS SECTION

EJN NUMBER	SCALE		REV.
114291	NONE	B2-008-1374	E

2 UND

PRINTED | VER.