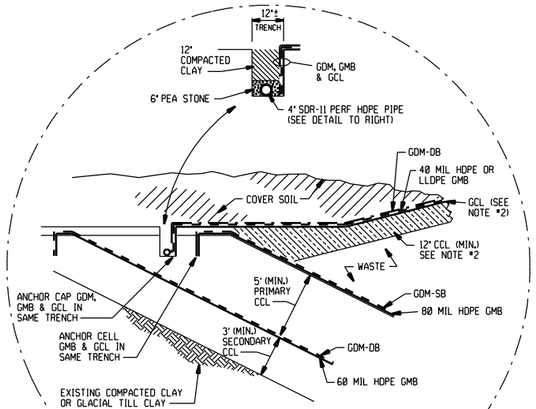

TYPICAL WEST CAP - CELL INTERSECTION DETAIL
(TYPICAL FOR EAST SIDE ALSO)

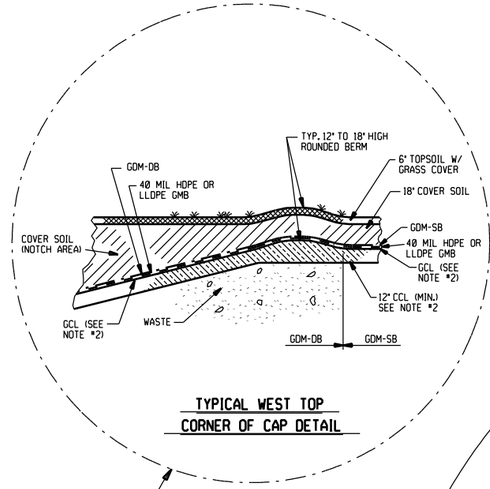

TYPICAL WEST TOP CORNER OF CAP DETAIL

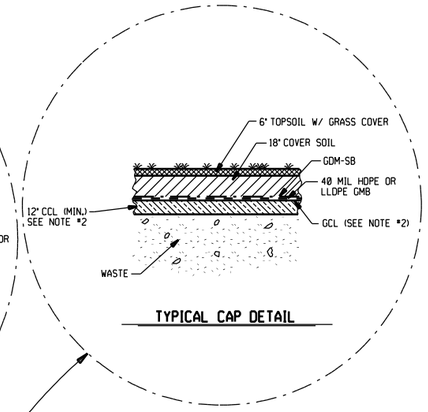

TYPICAL CAP DETAIL

NOTE:

1. THE MDEQ WILL ALLOW AN ALTERNATIVE "EQUIVALENT" DESIGN FOR THE PART 111 REQUIRMENTS OF:
   - A 3 FOOT THICK COMPACTED CLAY SECONDARY (BOTTOM) LINER WITH A MAX PERMEABILITY OF 1 x10-7 CM/SEC, AND,
   - THE 6 METERS OF NATURAL SOILS WITH A MAX PERMEABILITY OF 1 x10-6 CM/SEC BELOW & LATERALLY TO THE BOTTOM LINER

   THE EQUIVALENT DESIGN IS A 23 FOOT THICK LAYER OF NATURAL SOILS IMMEDIATELY BELOW THE SECONDARY SYNTHETIC LINER (60 MIL HDPE GEOMEMBRANE) HAVING AN AVERAGE PERMEABILITY OF 4.57 x10-7 CM/SEC OR LESS

2. THE MDEQ WILL ALLOW A GCL TO BE SUBSTITUTED FOR 2 FEET OF THE PART 111 REQUIRED 3 FOOT THICK COMPACTED CLAY CAP LINER IF EQUIVALENT ENVIRONMENTAL PROTECTION CAN BE DEMONSTRATED.

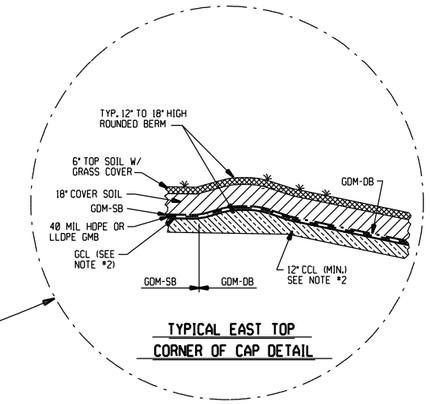

TYPICAL EAST TOP CORNER OF CAP DETAIL

LEGEND:

CCL = COMPACTED CLAY LINER

GCL = GEOSYNTHETIC CLAY LINER

GDM-DB = GEOCOMPOSITE DRAINAGE MATERIAL DOUBLE BONDED (GTX BOTH SIDES)

GDM-SB = GEOCOMPOSITE DRAINAGE MATERIAL SINGLE BONDED (GTX ONE SIDE)

GMB = GEOMEMBRANE

GNT = GEONET

GTX = GEOTEXTILE (SEPARATOR)

HDPE = HIGH DENSITY POLYETHYLENE

LLDPE = LINEAR LOW DENSITY POLYETHYLENE

LS = LIFT STATION

MH = MANHOLE

PERF = PERFORATED

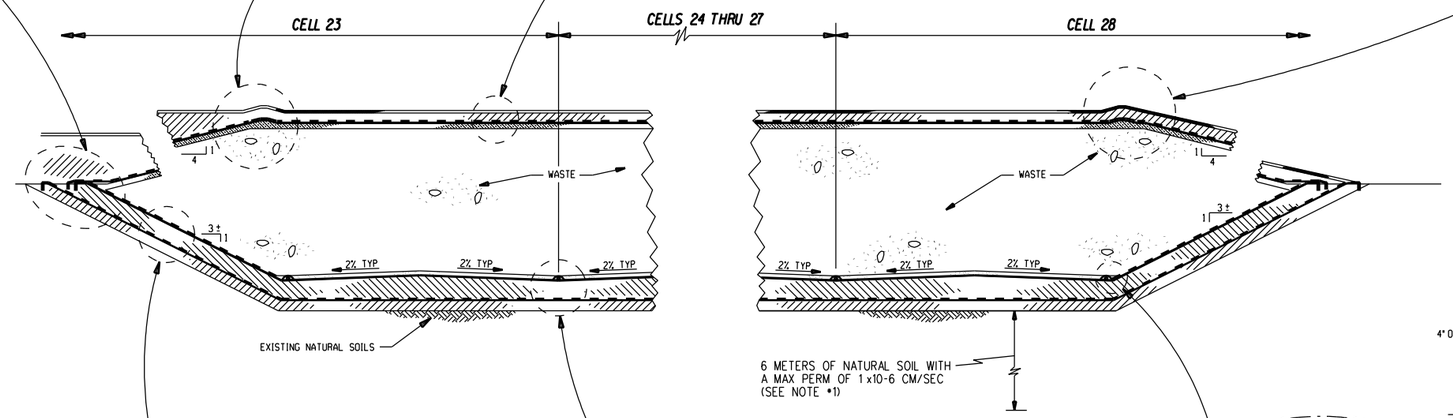

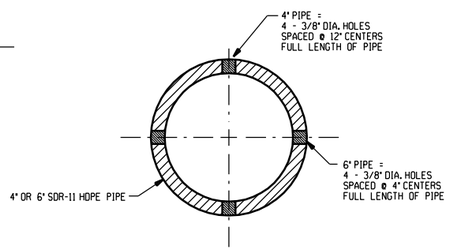

4" OR 6" PERFORATED HDPE COLLECTION PIPE (SDR-11)

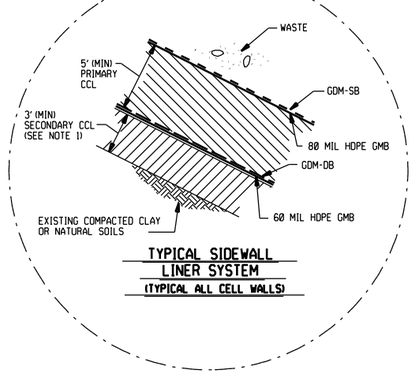

TYPICAL SIDEWALL LINER SYSTEM
(TYPICAL ALL CELL WALLS)

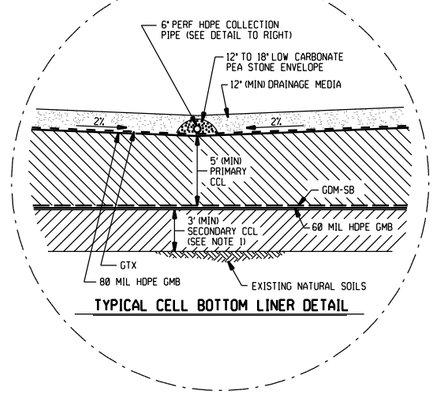

TYPICAL CELL BOTTOM LINER DETAIL

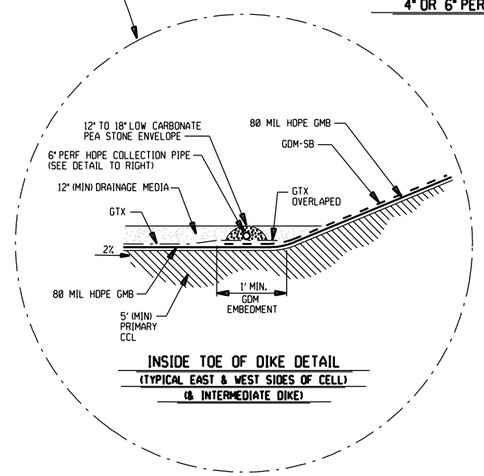

INSIDE TOE OF DIKE DETAIL
(TYPICAL EAST & WEST SIDES OF CELL)
(& INTERMEDIATE DIKE)

TYPICAL CELL & CAP EAST-WEST CROSS SECTION W/ LINER DETAILS

REV. MARK	REVISION	BY	CHK	APP	DATE
A	REVISED TO BE CONSISTENT WITH 2008 DESIGN TECHNOLOGY	LEG	JJA	JJA	2/08
B	REVISED TO SHOW 12" CCL UNDER GCL IN CAPPING SECTIONS	LEG	JJA	JJA	9/08
C	ADDED EQUIVALENCY NOTE FOR THE 3' SECONDARY CCL AND THE 6 METERS OF 1 x10-6 CM/SEC NATURAL SOILS	LEG	JJA	JJA	9/08
D	ADDED EQUIVALENCY NOTE FOR SUBSTITUTION OF A GCL FOR 2' OF THE 3' CAP CCL	LEG	JJA	JJA	9/08
E	ADDED LINEAR LOW DENSITY POLYETHYLENE AS POSSIBLE CAP GEOMEMBRANE	LEG	JJA	JJA	10/08

REV. MARK	REVISION	BY	CHK	APP	DATE

DRAWING ISSUE RECORD

ISSUE NO.	REV	MATERIAL OR JOB SPEC	BID	FAB	CONST	REF
			DATE ISSUED FOR			

DESIGNED	J.J. ALLEN	11/05
DRAWN	L.E. GIRARDIN	11/05
CHECKED	J.J.A.	11/05
APPROVED	J.J.A.	11/05
PROJ. ENGR.	J.J. ALLEN	11/05
MFG. REP.	STEVE LUCAS	11/05

STATUS | PLANT NO.
P.E. SEAL

THE DOW CHEMICAL COMPANY
MICHIGAN DIVISION — MIDLAND, MICHIGAN
SALZBURG LANDFILL — 3600 BLDG.

APPENDIX 15
CELLS 23-28 EAST-WEST CROSS SECTION

EJN NUMBER	SCALE		REV.
114291	NONE	B2-007-1374	E

2 UND

PRINTED | VER.

$INSTRUCTIONS $FILENAME $TIME $DATE $PERSON