Attachment 6

Closure Plan

SECTION 2.120

CLOSURE PLAN

TABLE OF CONTENTS

Page

2.120 CLOSURE PLAN

2.120.1 Introduction 2

2.120.2 Purpose 2

2.120.3 Facility Description 3

2.120.4 Hazardous Waste Management Units 4

2.120.5 Maximum Extent Requiring Closure 5

2.120.6 Maximum Inventory 5

2.120.7 Closure Performance Standard 6

2.120.8 Closure Certification 10

2.120.9 Sequence of Closure Activities 11

2.120.10 Closure Sampling. 12
- 2.120.101 Sample Handling and Preservation 12
- 2.120.102 Analytical Procedures 13
- 2.120.103 Data Analysis 13
- 2.120.104 Groundwater Sampling 13
- 2.120.105 Soil Sampling 20
- 2.120.106 Air Monitoring 25

2.120.11 Reporting 25

2.120.12 Closure of Specific Units 26

2.120.13 Data Evaluation 39

2.120.14 Decontamination 39

2.120.15 Notice Letters 40

2.120.16 Schedule 40

2.120.17 Characterization of Wastes for Offsite Disposal 46

2.120.18 References 47

FIGURES

2.120-1	Site Plan
2.120-2	Treatment Building Plan
2.120-3	Deepwell Cross Section
2.120-4	Waste Management Units
2.120-5	Waste Management Units
2.120-6	Waste Management Units
2.120-7	Waste Management Units
2.120-8	Waste Management Units
2.120-9	Waste Management Units
2.120-10	Waste Management Units
2.120-11	Waste Management Units
2.120-12	Waste Management Units
2.120-13	Waste Management Units
2.120-14	Waste Management Units
2.120-15	Waste Management Units
2.120-16	Waste Management Units - Location Plan
2.120-17	Sample Location Plan
2.120-18	Monitoring Wells Location Map
2.120-19	Air Monitoring Locations

TABLES

2.120-1	Air Monitoring Parameters

APPENDICES

2.120-1	Cleanup Standards
2.120-2	Sample Handling and Preservation Methods
2.120-3	Analytical Procedures
2.120-4	Data Analysis Methods and Laboratory Quality Assurance Manual
2.120-5	Waste Characterization Form
2.120-6	Tank Cleaning Procedures
2.120-7	Notice Letters

2.120 CLOSURE PLAN

2.120.1 Introduction

U.S. Environmental Protection Agency (EPA) regulations under the authority of the Resource Conservation and Recovery Act (RCRA) and Michigan rules require owners or operators of treatment, storage and disposal facilities (TSDFs) to prepare a detailed plan that describes closure procedures for waste management units.

2.120.2 Purpose

This document presents the Closure Plan for the Environmental Disposal Systems, Inc. (EDS) Citrin Drive facility located in Romulus, Michigan. It is organized to address 40 CFR Part 264 Subpart G and R299.9613 Closure requirements.

This closure plan has been prepared to provide the following:

- A description of how each waste management unit will be closed according to the closure performance standard.
- A description of how final closure of the unit will be conducted.
- An estimate of the maximum inventory of wastes in storage or treatment at any time, and a description of methods to be used during closure for removing, transporting, treating, and storing of hazardous waste.
- A description of steps necessary to decontaminate each unit or render it nonhazardous at closure.
- A description of other activities necessary to ensure that it satisfies the closure performance standards.
- A schedule for final closure activities.

The plan addresses decontamination of facility areas and subsurface soil sampling for documentation of clean closure.

It is anticipated that clean closure of the facility area will be achieved and the only post-closure activities required will involve maintenance of the grounds and ground water monitoring.

2.120.3 Facility Description

The EDS facility is located on Citrin Drive in Romulus, Wayne County, Michigan. A site plan showing the location of proposed on-site facilities is shown on Figure 2.120-1. The major site components consist of two deep injection wells, and the treatment and office buildings.

The EDS facility is designed to dispose of hazardous wastewaters from commercial and industrial clients, providing needed capacity for the long-term management of hazardous wastewater in the State Michigan.

Wastewaters will be transported by EDS and/or approved subcontractor transporters. Transport will be done by tanker truck, rail car, and/or semi-van.

The EDS facility, as proposed, differs significantly from other hazardous wastewater treatment facilities in that it does not release any liquids through an industrial discharge permit to a sewer system or any river or lake and therefore protects our surface waters and the food chain by isolating these wastewaters from the hydrologic cycle.

The Treatment Building plan, on Figure 2.120-2, shows the following components:

1. Sampling bays - Two sampling bays are provided for trucks to be sampled by EDS technicians. Rail cars will be sampled in the single rail car unloading bay.
2. Unloading bays - Two truck and one rail car unloading bays are provided.
3. Storage Tanks - Tanks for storage of acids, alkalis, incompatibles, and brine water are provided at the facility.
4. Treatment Equipment - Treatment equipment consists of oil - water separators, pH balancing tanks, flocculation equipment, filters, filter press equipment and a dryer.
5. Container Handling Area - An area of the treatment building has been designed to handle and store up to 11,000 gallons in containers.

Treatment sludges shall be stored in storage tanks prior to being filter pressed. Filter pressed solids will be dried and stored in covered, lined rolloff boxes on site until their contents can be analyzed and

approved for disposal.

The deepwells are connected to the treatment building by double walled piping to be constructed in sealed concrete trenches designed to contain any leakage and to allow such leakage to flow to a sump where it will be pumped back to storage tanks.

The proposed deepwells are to be drilled to about 4,500 feet in depth. Two deepwells are planned, however, both wells will not be used concurrently. These wells are enclosed in structures with the wellhead piping is constructed below grade in a concrete box structure. A cross-section of the proposed deepwells is provided on Figure 2.120-3.

2.120.4 Hazardous Waste Management Units

Hazardous Waste Management units will include the following facility components:

1. Receiving tanks (10)
2. Primary settling tanks (6)
3. Oil-Water Separators (2)
4. Container Storage Area
5. Flocculation tanks (2)
6. Inclined Plate Clarifiers (2)
7. Process Pumps (10)
8. Sludge Pumps (3)
9. Laboratory
10. Filters (16)
11. Filter Press and dryer
12. Sludge tanks (2)
13. NaOH Storage tank and feed pump
14. H^2SO_4 Storage tank and feed pump
15. Injection wells (2)
16. Piping attached to all of the above units
17. Secondary Settling tank (1)

These waste management units are shown on Figures 2.120-4 through 2.120-16.

2.120.5 Maximum Extent Requiring Closure

Each of the hazardous waste management units listed in Section 2.120.4 will require closure. In addition to closure of the units described in Section 2.120.4, the following areas will be sampled and

evaluated to determine the extent of any corrective actions required to complete closure.

1. Background and closure sample locations shown on Figure 2.120-17.
2. Sedimentation basin.
3. Roadways and other paved areas.
4. Rainwater accumulation tank.
5. Rail car storage area.
6. Stormwater discharge manhole and piping.
7. Groundwater monitoring wells.

No other site areas will require evaluation because no other areas are used for storage or other handling of wastes.

2.120.6 Maximum Inventory

The maximum amount of hazardous waste possibly needing to be disposed under closure conditions is summarized below.

	Unit	Maximum Potential Inventory
1.	Receiving tanks	160,091 gallons
2.	Primary settling tanks	40,605
3.	Oil water separators	128
4.	Container Storage Area	11,000
5.	Flocculation tanks	4,350
6.	Clarifiers	5,760
7.	Pumps	30
8.	Sludge pumps	30
9.	Laboratory	20
10.	Filters	30
11.	Filter press and dryer	795
12.	Sludge tanks	43,000
13.	Injection wells	28,000
14.	Piping units	5,000
15.	NaOH Storage tank	5,000
16.	H^2SO_4 Storage tank	4,000
17.	Secondary Settling tank	16,948
18.	Chemical feed pumps	20
19.	On site transport vehicles	103,000
		423,327 gallons

If facility closure occurs at a time when wastes have been delivered to the site in trucks and rail cars, any deliveries not yet unloaded at the time closure starts will be manifested and transported back to the generator or, with approval of the MDEQ, will be unloaded into the onsite storage tanks. If waste

shipments have been accepted by EDS, but can not be unloaded onsite, they will be temporarily stored onsite until an appropriate disposal facility agrees to accept these wastes. For purposes of this analysis, for worst case conditions, it has been assumed that two trucks and six rail cars having a total volume of 103,000 gallons could be left on site which would need to be disposed.

In addition to the liquid wastes summarized above, filter pressed sludges could be present at the time of closure. A maximum of two, thirty cubic yard, lined, covered rolloff boxes full of sludge may need to be analyzed and disposed at a licensed disposal facility. No staging of these sludges will be required.

No other wastes are anticipated to be on site at the time of closure, however, a small quantity of lubricating oils and cleaning solutions (less than 20 gallons total) used in plant operations will need to be removed from the site and recycled.

Although actual conditions would likely not require the handling of the maximum volume shown above, the closure plan will assume this volume will need to be handled.

2.120.7 Closure Performance Standard

In accordance with 40 CFR Part 264.111 and MDEQ regulations, EDS will close the facility in a manner that:

- minimizes the need for further maintenance;
- controls, minimizes, or eliminates post-closure escape of hazardous wastewater, hazardous waste constituents, contaminated rainfall, or waste decomposition products to the ground water, surface waters, or to the atmosphere through removal of all known sources of contamination; and
- complies with the closure requirements of 40 CFR Part 264.178 and 264.197 and MDEQ regulations.

EDS will achieve the closure performance standard for the facility by performing the following:

- Decontaminating equipment used for operations and final facility closure and disposing of decontaminated material at a permitted offsite facility if the onsite deepwells are unable to be used.
- Cleaning and decontaminating of access roads, storm sewers, catch basins, sumps, unloading area, and the rainwater accumulation tank.
- Dismantling and removing tanks, piping, pumps, filters and related components for reuse or salvage.
- Sampling and testing of soils beneath and adjacent to the access roads, parking areas, rail car unloading area and the sedimentation basin.
- Maintaining a ground water monitoring system to monitor for constituent migration into the ground water.
- Periodically conducting inspections of closed areas and performing maintenance/ replacement activities required to keep the monitoring system(s) in order.
- Disposing of decontaminated (and contaminated if present) equipment and materials in conformance with applicable standards.

With respect to required remediation, standards for cleanup purposes will be those specified by the MDEQ at the time of closure, considering all applicable exposure pathways for unrestricted use of the property. The current Generic Residential Cleanup Criteria as presented in the MDEQ Environmental Response Division Operational Memorandum #18, Generic Criteria Tables, dated May 28, 1999, represent the current equivalent cleanup criteria. Should the performance monitoring data for groundwater and/or soil indicate the presence of a constituent above background levels established pursuant to Section 5.20.2.4 of the Sampling Plan, the applicable Generic Residential Cleanup Criteria as noted above will be used for the purpose of achieving a "clean closure" without a post-closure monitoring program. Any location showing a level above background levels shall be remediated in accordance with Section 2.120.12.1.

2.120.8 Closure Certification

A Closure Certification Report will be assembled by the Quality Control Officer. At a minimum, the EDS facility Closure Certification Report will contain the following information:

1. As-built plan set of drawings representing actual work performed under closure activities and the final site conditions, and elevations.

2. Any written correspondence with agencies regarding the closure. Copies of notices of closure sent to the Waste Management Division of the MDEQ, USEPA, County, City, and the Environmental Concerns Association.

3. Summary of all field observations and tests performed, samples collected, and test results reported by testing laboratories.

4. Evaluation of soil sampling data in comparison to closure standards established by the MDEQ.

5. Manifests or shipping receipts documenting where and how much waste was shipped off-site.

6. Results of all tests used to determine clean closure (actual laboratory analytical sheets).

7. Statistical comparisons of sampling results compared to cleanup criteria.

8. As-Built sample location map showing sample and grid locations.

9. Any groundwater data used to determine if groundwater degradation has occurred.

10. A copy of the current, approved closure plan.

11. Location map showing any contaminated soils removed, and the extent and type of fill used to replace soils removed.

12. Summary of any problems encountered during the closure.

13. Documentation that acceptance criteria were met and specifications regarding what the acceptance criteria are.

14. Documentation of all equipment and chemicals removed which were sold, recycled, or scrapped.

15. Certification by an independent registered professional engineer that the closure as completed in accordance with closure plan requirements.

16. Closure certification statement signed by a duly authorized representative of EDS in accordance with 40 CFR 270.11(a)(b)(d) and applicable state regulations.

Within 60 days of completion of final closure, the certification will be submitted to the Department of Environmental Quality (MDEQ) Waste Management Division and the EPA. Documentation supporting the certification must be available upon request and EDS has been released from the financial assurance requirements.

2.120.9 Sequence of Closure Activities

Prior to starting any closure activities, notices of the proposed activity shall be provided to the MDEQ, EPA, County, City and local resident groups.

The sequence of closure activities will depend on whether the deepwells are still operable and can be used for wastewater disposal. If these wells are usable at the time of closure, the deepwells will be the last waste management unit to be closed. For purposes of this Plan it will be assumed the deepwells can not be used to dispose wastewater during closure. As a result and because their closure can be done independently of the closure of other units, the actual sequence of well closure will depend on the availability of oil well maintenance equipment and can be completed at any time during other closure activities.

Closure Sequence

Hazardous waste management units and adjacent units will be closed prior to evaluating soil and groundwater conditions. This sequence has been selected so that any contamination potentially created during closure can be detected during the evaluation phase. Air monitoring will be conducted throughout the closure activity period per Wayne County air permit conditions.

The first elements to be closed will be the Rail Car Storage Area and the Rainwater Accumulation Tank which collects runoff water from the Rail Car Storage Area. Once these two elements are closed, these areas will be graded to drain to runoff collection system components located east of the Treatment Building.

Once the above mentioned components are closed, work will begin on closing the Container Storage Area, the Receiving Tanks, Primary Settling Tanks, Oil-Water Separators, and the remaining equipment in the Treatment Building and Laboratory. Once all of the equipment units are closed, general cleaning of the Unloading bays, Sampling Bays, and the General Plant Areas will be completed. Upon completion of these closure activities and closure of the deepwells, closure of the detention basin will be conducted.

After completion of the abovementioned closure activity, soil and groundwater analyses will be

conducted to confirm remediation of other site areas is not required. Upon completion of the soil and groundwater analyses, a closure certification report will be prepared.

2.120.10 Closure Sampling

2.120.101 Sample Handling and Preservation

Sample handling and preservation procedures are summarized in Appendix 2.120-2.

2.120.102 Analytical Procedures

Analytical procedures to be used on closure samples are provided in Appendix 2.120-3.

2.120.103 Data Analysis

Data analysis methods for laboratory analyses is also provided in Appendix 2.120-4 in the laboratory's Quality Assurance Manual.

2.120.104 Groundwater Sampling

Monitoring wells shown on Figure 2.120-18 will be sampled at closure. Sampling procedures will be similar to those used for sampling performed during operation of the facility.

Each monitoring well will be equipped with a dedicated purging and sampling pump (QED Well Wizard pumps). The pump is a positive displacement design that will not result in oxygenation of volatile compound stripping of the ground water sample. The materials of construction are compatible with the constituents to be analyzed (e.g., sorption of dissolved constituents or leaching of pump constituents).

Analysis of samples from the monitoring wells is anticipated to be conducted by Environmental Control Technology (Encotec) of Ann Arbor, Michigan. If EDS decides to contract analysis of ground water samples to another laboratory after background or detection monitoring begins, the change will be made only after at least two concurrent sampling/analysis events define the correlation of analytical results between the existing and proposed laboratories.

An on-site laboratory will be used to verify the contents of samples from the delivery vehicles are those

that were approved for disposal only. No analyses of the facility ground water samples are performed in the on-site laboratory. To obtain representative hydraulic head data for the site, the water levels must be obtained for all wells before any water is removed for purging or sampling. . .

Measurements made shortly after purging and sampling may not be representative of conditions in the porous media in which the wells are installed because the low hydraulic conductivity of some of the monitored media will delay the return of the water levels to an equilibrium condition. The water levels must also be obtained for all wells in as short a time as possible on the same day.

The depth to water within the well casing is measured from the top of the well casing (TOC). The TOC elevation shall be surveyed immediately following well installation. The TOC will be resurveyed every two years or whenever the well has been or is suspected of having been damaged. The depth to water is measured using an electric water level indicator. The probe and submersed portion of the cable are cleaned by rinsing with distilled water and wiping the cable and probe dry with a clean (unused) cloth or paper towel. This minimizes potential cross-contamination between wells.

A water level measurement is made by slowly lowering the probe into the casing while watching for the light and listening for the buzzer that indicates that the probe has come into contact with water. Careful determination of the water level is accomplished by raising and lowering the probe at the water surface, and monitoring the light and buzzer. The cable is held against the inside edge of the well casing at the TOC and the depth to water to the nearest 0.01 foot is noted. The probe is then pulled up 1 to 2 feet, and the process is repeated to verify the measurement. The measurement is then recorded.

Once water levels are recorded, the wells are purged to allow water that is representative of current conditions in the porous media being monitored to enter the monitoring well.

Before purging a well, it is necessary to determine the quantity of water contained within the well casing. This is done by subtracting the depth to standing water from the depth to the bottom of the well screen for each existing well as determined at the time of well installation. The depth to the well screen bottom is confirmed semi-annually by lowering the water level indicator probe to the very bottom of the well casing for a determination of the clear depth of the well. The difference between the screen

depth and the water level depth is the height of water (in feet) in the monitoring well. This value is multiplied by 0.17 gallons per foot (for 2 inch diameter well casing) to yield the volume of water in the well (in gallons). That product is multiplied by 3 to obtain the MDEQ-recommended minimum number of well casing volumes to be purged. These calculations are recorded in the field notebook.

The dedicated purging and sampling pump is used to purge the monitoring well. Once three well volumes have been removed, the pH and specific conductance of the water coming from the well is measured and recorded. Pumping is then continued and pH and specific conductance are measured and recorded at a rate of once every 10 minutes for a minimum of 30 minutes. The highest and lowest of three consecutive values of pH and specific conductance are then compared. If the difference between the highest and lowest pH values is 0.1 SU or less, the well is considered stabilized with respect to pH. If the difference between the highest and lowest specific conductance values is 10 percent or less of the mean of the highest and lowest value, the well stabilization with respect to conductance is considered complete.

If pH and conductance are not stable following the removal of three well volumes plus 30 minutes of pumping, the purging of the well is continued until the criteria are satisfied for any three consecutive 10-minute measurements of both pH and specific conductance.

Once the criteria is met the well is considered to be fully stabilized (formation waters are entering the well) and sampling can proceed. The well water temperature will be measured and recorded once the well is stable. All of the data obtained to establish well stabilization are recorded in the field notebook. Sampling of slow recovery wells is accomplished as soon as sufficient water for the analyses is available after the fourth well evacuation. The pH, specific conductance, and temperature is measured and recorded in the field at the time the sample is obtained from a slowly recovering well.

In the cases where an individual well cannot be purged to stabilization in a manner described above because the well is dewatered, the well is sampled as soon as it recovers enough water to sample.

Samples are collected upon completion of the well purging step described above.

Make sure each sample bottle for a given monitoring well has a label (affixed by the analytical laboratory personnel) which contains the facility name, the monitoring well number, the date and time of sample collection, and the sampler's initials. The type of preservation in the sample (if present) is also recorded on the label.

The following equipment and materials will be needed to clean sampling equipment:

- Washing baths;
- Brushes;
- Supply of potable water;
- Supply of distilled water;
- Supply of detergent (Alconox or similar type);
- Clean paper towels; and
- Polyethylene sheets.

Decontamination will be accomplished by completing the following tasks:

1. After the required samples are taken, disassemble the components to the degree possible and wipe the parts with clean paper towels to remove residual liquids.

2. Immerse the individual components in a bath filled with potable water and detergent. The individual components are to be scrubbed with a brush to remove residue.

3. Remove the components from the first bath and allow excess water to drip into the bath. Immerse the components in a second bath containing potable rinse water.

4. Remove components and rinse them with distilled rinse water and reassemble if necessary. Allow the sampler and sample components to air dry. The components and sampler shall be placed in a clean polyethylene sheet during and after drying to prevent contamination from soils.

5. If significant airborne contamination is present, the equipment should be wrapped in the polyethylene sheet immediately after decontamination.

The vials for the collection of volatile organic compounds are filled first. No head space (air bubbles) is permitted in the vials used to collect samples for the analysis of volatile organic compounds.

Samples that are analyzed for major ions and trace elements (such as arsenic, and sodium) will be passed through disposable (one-use) 0.45 um filters before being placed in the sample containers provided by the laboratory. The filters are placed on the discharge line in the sampling box, and the

filtered ground water is discharged directly into the laboratory-provided containers.

The inside of bottle necks or caps are not touched, to minimize potential cross-contamination. The number and type of samples taken and the time of sampling are recorded on the chain-of-custody record and in the field notebook. The container label and field notes identify which sample aliquots have been filtered.

Trip blanks and field blanks will accompany ground water sample bottles for each monitoring well. The trip and field blanks are prepared by the laboratory and shipped with the sample containers to the site. The trip blanks remain unopened throughout the sampling process. Field blanks are opened inside the sampling box after the box atmosphere has been purged with nitrogen gas. The field blanks are recapped once all the sample bottles have been filled.

Trip and field blanks will be analyzed for primary monitoring constituents at a rate of one each for every 10 samples collected. The blanks analyzed will be selected randomly from each set of 10. Trip and field blanks associated with any environmental sample reported to contain monitoring constituents will also be analyzed for primary constituents.

Replicate samples are obtained at a rate of 10 percent of the environmental samples by doubling the volume of the environmental sample and dividing the water between two sets of sample containers. The replicated samples are randomly selected from each sampling round and are collected, preserved, handled, and analyzed for the same constituents as the sample it replicates. All replicates are blind replicates; that is, the laboratory will not know which samples are replicated. The replicates are used to assess the reproducibility of sampling and analysis techniques.

When the sample collection step is completed and all of the sample containers are sealed, all bottles are transferred to a cooler packed with ice. The samples are immediately transported to the on-site laboratory where they are transferred from the cooler to the laboratory's refrigerator.

At the close of the sampling day, all collected samples and blanks are repacked in ice filled coolers, and transported or shipped by overnight delivery service to the analytical laboratory. Chain-of-Custody

records are included with all samples.

A bound field notebook is maintained for each monitoring well. All entries into the notebook are made in indelible blue or black ink. The notebook begins with a title page that notes the facility name and MDEQ permit number, and identities the monitoring well. The title page is followed by a table of contents that lists all sampling events by date of sampling.

All sampling events are recorded in the notebook in chronological order. Records begin with a summary of the well's physical condition and immediate surroundings (i.e. drainage casing, soil erosion). The security of the well is then noted (i.e., Was well locked? Could damage allow tampering with well?).

Once the well is opened the water level is measured and recorded to the nearest 0.01 foot the total depth of the monitoring well is then measured and recorded. The length of water column and the volume of water in the casing is computed. All computations are recorded in the notebook.

Purging is then documented as follows:

a) Record pumping rate.
b) Record duration of pumping prior to first pH and specific electrical conductance (SEC).
c) Record first pH and SEC measurements.
d) Record time of subsequent pH and SEC measurements and pH and SEC values.
e) Compute stabilization criteria and record.

Sample collection is then documented as follows:

a) Record type and volume of sample containers filled.
b) Record chain-of-custody number for samples.
c) Record date and time of sample collection.
d) Record preservation using the following codes:
    1) storage at 4°C
    2) sodium hydroxide addition to pH>12 and addition of 0.6g ascorbic acid

3) acidification to pH<2 with sulfuric acid

4) field filtration through 0.45 um membrane prior to acidification with nitric acid. Use all codes that are applicable

e) Record qualitative degree of turbidity and color of sample.

f) Record other observation regarding sample condition as appropriate (e.g., degassing, reaction to preservative).

The final entry for a given sampling event is to note the disposition of the sample as follows:

a) Date and time of delivery to the on-site laboratory.

b) Date of sample delivery to analytical laboratory.

All pages of the notebook are signed and dated by the person(s) who made the entries on that page.

Chain-of-custody refers to the record of individuals who handled the samples and external conditions of sample handling through the time of laboratory analysis. The chain-of-custody form is the principal document for this record. These sheets are completed with sampling information, the names of the persons involved with sampling, shipment conditions, and transport to the analytical laboratory. These forms accompany the samples to the laboratory.

When the samples are surrendered at the laboratory, each chain-of-custody record is signed by the person transporting the samples as well as by a representative of the receiving laboratory. The laboratory makes a copy of each sheet for EDS and keeps the originals. Two copies are made upon return to the site: one for the operating log notebook and one for the EDS Office files. Upon completion of a full round of sampling, summaries of the depth to water, field monitoring data, and all chain-of-custody records are transmitted to the EDS office.

The well casings, protective covers, and dedicated pumping apparatus are inspected for damage at the time each well is sampled. Any damage is noted in the field notebook and reported to EDS. Also noted is any surface erosion, standing water at the well, or evidence of a damaged grout seal around the well.

In the event any damage requiring well repair becomes necessary, a Damage Incident Report is prepared. A copy of this report is paced in the site Operating Log, and the Engineering Office Incident File. A proposed method of well repair is prepared and submitted to the MDEQ Waste Management Division for approval. Repair efforts will be undertaken after approval by the MDEQ is received. The MDEQ Waste Management Division shall then be notified at least 24 hours prior to initializing the repair efforts.

Following completing of the well repairs, as-built documentation of the repair efforts are prepared. A copy of this documentation is placed in the site Operating Log. A copy is also sent to the MDEQ Waste Management Division.

Should the performance monitoring data for groundwater and/or soil indicate the presence of a constituent at a concentration representing a "release" from the facility, the Cleanup Criteria provided in Section 2.120.7 will be used for the purpose of achieving a "clean closure".

2.120.105 Soil Sampling

Soil sampling will be performed in each hazardous waste management area at locations shown on Figures 2.120-4 through 2.120-16. Areas outside of the hazardous waste management unit areas shall be sampled at locations shown on Figure 2.120-17 at the conclusion of the closure of the hazardous waste management units.

Sampling of soils beneath facility components will take place following the decommissioning and decontamination of surface facilities. The objective of the closure soil sampling is to assess whether the secondary containment structures or other structures have potentially released waste constituents to soil.

Sampling collection and analysis procedures will be the same as those used for these activities performed during operations, except that soil sampling for volatiles shall follow the "methanol method" (SW846 Method 5035) followed by 8260, or the most recent update of SW846 available prior to closure. Sampling shall follow procedures outlined ikn references I-3 found in Section 2.120.18. All samples taken will be discrete samples.

All sampling locations will be surveyed and marked on engineering drawings. Each sample will be designated by DF-001-0.1; a two-letter prefix designating it as a disposal facility annual sample, a three-digit number unique to each sampling location, and the depth of the mid-point of the sample interval.

The following sampling procedures apply to both background and annual soil samples. Each sample consists of a discrete sample collected within approximately 2 feet of the selected sampling locations. Each sample consists of approximately 0.5 kg of soil collected within the shallowest 6 inches of soil.

The soil is collected with a steel trowel and placed into a disposable (one-use) aluminum pan. Large fragments of organic matter, such as leaf litter, roots, twigs, and gravel larger than 0.25 inches will be removed.

The soil is placed into the sample containers until all of the containers are full. The bottom of the sample containers is gently tapped to consolidate the soil, and additional soil is placed into the containers to completely fill the container. The top and threads of the sample containers are wiped clean with dry, disposable (single-use) towels, and the cap is placed on the container. Consistent with U.S. EPA Methosd 5035 (e.g., methanol preservaton), the soil samples to be analyzed for volatile organic compounds wil be preserved in the field in a 1 to 1 ratio with metha nol, and at least 2 ounces of soil will be collected into a separate container for determination of the sample dry weight.

The soil samples collected under pavement, structures, or for closure monitoring will be obtained from beneath the pavement and concrete using 2.25-inch-inside-diameter hollow-stemmed augers (HSA) and split-barrel samplers. The pavement will first be cored and the base course removed to expose the surface of the soil. The first sample will be collected from the surface of the soil beneath the roadway base course to a depth of 2 feet. When additional, deepwell samples are required, the HSA will be advanced to the bottoms of the previous sample interval and the next sample will be collected.

The soil samples will again be placed into a pre-cleaned, disposable (single-use) aluminum pan. The trowel and pan are cleaned prior to use by washing in an Alconox (or equivalent) solution, rinsing with deionized water, and the drying with a disposal (one-use) unbleached paper towel. Large fragments

of organic matter and gravel greater than 0.25 inch in diameter are removed. Sample containers are then filled as previously described for the annual soil sampling.

Equipment that comes into contact with the actual soil sample will be decontaminated prior to each use. Decontamination will consist of washing with an Alconox (or equivalent) solution followed by deionized water rinsing. The equipment will then be dried with a disposable (single-use) paper towel. Drilling equipment will be steam-cleaned prior to the start or each closure boring.

Closure samples for the basin will be collected of the native soils following the final sediment removal from the basin. A sampling grid will be established across the basin in accordance with MDNR (1994) guidance for verification of soil remediation. Each sample will be uniquely designated as SBC-000, where SB identifies Sedimentation Basin sample, C signifies that this is a closure sample, and the last three numbers identify a specific sample. Field blanks (prepared by the laboratory using reagent-grade organic-free, deionized water) will accompany the background, annual, and closure samples at a rate of one blank per sampling event (minimum of one blank per day of sampling). These blanks are intended to assess the possible contamination of soil samples by the sampling equipment and/or sampling. The containers are opened in the field during the sample collection period and are then returned to the laboratory for analysis of the same constituents as the soil sample. A field blank will only be analyzed if the environmental sample with which it is associated has a quantifiable concentration of a monitoring constituent over a background concentration.

One replicate sample is collected for each ten samples during a sampling event by doubling the sampling volume at one, randomly selected, sampling location. All replicates are blind samples; that is, the laboratory does not know which environmental samples have been replicated. The replicates are used to assess the reproducibility of sampling and analysis techniques.

Documentation of sample collection is completed at the time of sampling. All sampling collection and handling will be performed by qualified personnel experienced in such work.

All samples and blanks are transferred to chilled coolers immediately following sample collection. The samples are then transferred to the on-site laboratory and placed into a refrigerator. Samples collected

during the day are delivered or shipped by an overnight delivery service to the analytical laboratory at the end of each day of sampling. A bound field notebook is maintained for documentation of soil sampling. All entries to the notebook are made in ink. The notebook begins with a title page that identifies the facility and a subject line that indicates that the notebook records soil sampling activity. The title page is followed by a table of contents that lists all sampling events by sample collection date.

All sampling events are recorded in the notebook in chronological order. The record for each sampling event begins with the determination of sampling location. The randomly selected headings and distances from each permanent marker are recorded for annual sampling events. Other sample locations will be marked using a lath or equivalent and surveyed.

The collection of each sample is then documented as follows:

a) Date and time of sample collection.
b) Type and volume of sample containers filled.
c) Chain-of-custody number for the sample.
d) Describe soil sample according to the Unified Soil Classification System (ASTM Method D2488, latest edition).

The final entry for the sampling event notes the disposition of the sample as follows:

a) Date and time of delivery to the on-site laboratory.
b) Date and time of sample delivery to analytical laboratory.

All pages of the notebook are signed and dated by the person(s) who made entries on that page.

Chain-of-Custody refers to the record of individuals who handled the samples and external conditions of sample handling through the time of laboratory analysis. The chain-of-custody record is the principal document for this record. These sheets are used to record sampling information, the names of persons involved with sampling, shipment conditions, and transport to the analytical laboratory. These sheets accompany the samples to the laboratory.

When the samples are surrendered at the laboratory, each chain-of-custody record is signed by the

person transporting the samples and by a representative of the receiving laboratory. If an overnight delivery service is used to ship samples from the field to the laboratory, the person shipping the samples will show the samples being relinquished to the delivery service but signatures of delivery service personnel will not be required. The delivery service bill of lading will become part of the chain-of-custody record to document this step in the sample handling process. The laboratory makes a copy of each sheet for EDS and keeps the originals. Two copies are made upon return to the site: one for the operating log notebook and one for the EDS Office files. Upon completion of a full round of sampling, field monitoring data and chain-of-custody records will be filed in the EDS Office.

Soil sampling will be performed beneath concrete floor slabs and other foundations, as required, to verify these soils have not been contaminated by plant operations. If contamination is found, verification of soil remediation will be performed per sampling requirements established in the MDNR (1994) Guidance Document.

Closure monitoring will begin with sampling from beneath the catch basins and sumps. These areas have the greatest potential to be exposed to a variety of waste materials that pass through a given containment area, since the exposure durations are likely to be the longest, and for solubilized waste constituents, since the hydraulic heads that drive wastewater through the containment will be greatest.

The general locations of the initial closure monitoring sampling are identified on Figure 2.120-17. Samples taken at closure will be designated by the prefix "CM-". The sampling points provided are generally located based on the placement of catch basins and sumps. Specific sampling points will be selected on the basis of field observations at the time of sampling. The sampling will focus on significant cracks, holes, or other penetrations at the base of the walls and on the floor of the sumps. Where present, joints between or within floors and walls will also be inspected for penetrations. The closure samples will be collected from beneath or immediately adjacent to suspected penetrations of the containment. If no penetrations are apparent, the samples will be collected from beneath the center of catch basins or sumps.

Should the closure monitoring data for soil indicate the presence of a constituent at a concentration representing a "release" from the facility, the Cleanup Criteria provided in Section 2.120.7 will be used

for the purpose of achieving a "clean closure". A "release" is defined as a contaminant concentration that exceeds the respective pre-operation background value established pursuant to Section 5.20.2.4, Background Level Determination.

Confirmation of a release of waste constituents will initiate a second phase of closure monitoring. This second-phase sampling will focus on the area immediately surrounding the implicated basin or sump. The second-phase sampling plan will be designed to evaluate the extent and nature of the release(s) identified in the initial monitoring as described in Section 2.120.12.1. The second-phase sampling plan(s) will be based on confirmed releases; therefore, they will be prepared for MDEQ review following the initial closure monitoring described in this plan.

2.120.106 Air Monitoring

Air monitoring as performed during operations will continue during the closure period. Air samples will be taken every three days. Samples will be analyzed using methods and parameters provided in Appendices 2.120-2 and 2.120-3 and Table 2.120-1. Sample locations are shown on Figure 2.120-19.

2.120.11 Reporting

Results of soil monitoring will be submitted to the Chief of the Waste Management Division of the MDEQ within 60 days of sample collection. Confirmation testing, if required, will proceed immediately following identification of any exceedance. The Chief of the Waste Management Division will be notified within 7 calendar days of such confirmation testing. The results of the confirmation sampling will be submitted to the Chief of the Waste Management Division within 30 calendar days of sample collection. No response will follow if the representative constituent concentration in the additional soil samples in the suspected area is not the respective background value established pursuant to Section 3.4.3 and using the methodology cited therein.

A second-phase closure sampling plan will be prepared if the confirmation sampling results exceed the background values established pursuant to Section 3.4.3. This plan will be submitted to the Waste Management Division for review and approval within 30 days following the notification of a confirmed exceedance. The second-phase plan will include a schedule for sample collection, analysis, and reporting.

If warranted, a plan for soil remediation will be prepared for the MDEQ's review and approval once the nature and extent of the release is defined and the data have been evaluated. The remediation plan will be implemented following the MDEQ's approval of the plan.

Additional reporting of closure activities will be provided in the Closure Certification Report required in Section 2.120.8 of this Plan.

2.120.12 Closure of Specific Units

Security Station

No waste materials or other chemicals requiring any special closure procedures will be maintained at the Security Station shown on Figure 2.120-1. This station will be maintained by security personnel on a 24-hour a day basis until closure activities are completed. Upon completion of closure activity this security station will be left on site until a determination is made relative to the future use of the property.

Office Building

This building will be utilized through the closure period and will be left in place until a determination is made relative to the future use of the property. No waste materials or other chemicals requiring any special closure procedures will be kept in this structure during operational or closure activities, located as shown on Figure 2.120-1, therefore no closure activity will be required relative to this structure.

Facility Roadway and Paved Areas

Paved areas adjacent to the office building will not require any closure work because waste materials will not be allowed to enter this area.

Access roads and paved areas potentially subject to exposure by hazardous substances will be decontaminated in accordance with 40 CFR Part 264.114. All roadways, parking areas, and associated storm sewers will be throughly cleaned using high-pressure water cleaning equipment, including piping to the rainwater accumulation tank. Water and sediment collected from this cleaning process will flow to the rainwater accumulation tank or the sedimentation basin via the roadway storm sewers. Water from this cleaning process will be pumped to the appropriate tank within the facility or to the

potentially contaminated rain water accumulation tank. The water will be pretreated as required and disposed of in the injection well.

Sediment that is collected in the storm sewer will be removed, stored in lined, covered roll-off boxes, and analyzed. It will then be disposed of at a licensed disposal facility. If the sediment does not meet such restrictions, it will be appropriately treated at a permitted landfill prior to disposal. If the sediment or wastewaters from cleaning operations test out to be contaminated or hazardous, the sewer system will be cleaned further and tested again until the associated cleaning water and sediment test out to be clean per MDEQ standards.

After surface decontamination, roadway and paved areas shown on Figure 2.120-1 will be sampled using a 20 x 20 foot grid spacing or any updated procedure provided by the MDEQ which requires more samples. Sampling and testing procedures shall be those described in Section 2.120.105 of this Plan. Any of these areas not meeting closure performance standards will be remediated.

Sedimentation Basin

Closure activities for the sedimentation basin will be performed after completing a closure of the hazardous waste management units. Contaminated soils or sediment from the sedimentation basin, if any, will be disposed of at a licensed off-site facility. Sediment in the basin will be sampled and analyzed as discussed in Section 2.120.105.

The basin will be taken out-of-service after it achieves clean closure and vegetation is established in the basin. The basin will be decommissioned by removing the discharge control structures and re-establishing a channel and grading for appropriate runoff. Erosion control measures will be implemented on the exposed soils and the soil will be graded and seeded to establish a cover of vegetation.

The first step in closing the basin will be to remove water in the basin. Any discharge of collected water to the Godfrey Drain will be done in compliance with the applicable requirements under Part 31 of Act 451. The water in the basin will be analyzed for parameters provided in Section 2.120.7 of this plan to determine if this water can be discharged to the adjacent Godfrey Drain or whether it is

contaminated and has to be disposed in the deepwell onsite or at a licensed, off-site facility. Samples will be taken and analyzed using procedures described in Section 2.120.104.

Once the water is removed, sediments and underlying natural soils will be sampled and analyzed for parameters provided in Section 2.120.7 using procedures described in Section 2.120.105 and Appendix 2.120-3. Samples will be obtained using hand and shovel excavation or split spoon sampling, as required. Any areas not meeting closure performance standards will be remediated in accordance with Section 2.120.12.1.

If clean closure cannot be obtained floolowing the procedures presented above, the data collected will be summarized and used to prepare a sampling plan. The plan will outline the steps EDS will take to investigate the nature and extent of any required remediation. The plan will be submitted to the MDEQ for review within 60 calendar days following the completion of field activities showing such a plan is required.

Rail Car Storage Area and Adjacent Railway

Soils in the Rail Car Storage Area shown on Figure 2.120-1, below and adjacent to paved areas, will be evaluated after the pavement is throughly cleaned using high pressure water blasting equipment. Wash water from this surface cleaning will be collected in piping leading to the rainwater accumulation tanks.

Concrete surfaces will be sampled by coring, and the underlying soils within six inches below the concrete will be sampled at locations required on Figures 2.120-4 through 2.120-15 for closure verification. Concrete cores will be analyzed by grinding the upper inch of the concrete core for use in analyses. Anayltical data will be compared to the applicable criteria as noted in Section 2.120.7.

If remediation is not required, the core holes will be plugged using cement grout and the structure will be left in place.

Any of these areas not meeting closure performance standards for soil contamination will be remediated in accordance with Section 2.120.12.1.

Sampling and Unloading Bays

Each of these areas will be cleaned using high pressure water blasting equipment, including all sumps and trenches. Washwaters from this cleaning will be drained to the rainwater accumulation tank. If the accumulation tank is full, washwaters from the tank will be pumped into storage tanks in the treatment building or transported offsite to a licensed, disposal facility after appropriate analyses and waste disposal approvals.

Once all surfaces are triple rinsed, each of these areas will be examined visually. Any structural components which cannot be decontaminated by triple rinsing shall be removed and disposed off site.

Any of these areas not meeting closure performance standards for soil contamination will be remediated in accordance with Section 2.120.12.1.

Container Storage Area

The container handling area is the area where containerized wastes are off-loaded from trucks, staged, sampled and emptied. The unloading docks consist of pitched concrete containment areas, coated with a chemical-resistant sealant. Collection trenches and blind sumps with manually placed and actuated submersible pumps are located within the containment area.

In order to meet the requirements of the closure performance standard, high-pressure hot water cleaning equipment will be utilized. The decontamination will be confirmed by visual inspections and wipe sample testing.

Closure of the Container Handling Area will consist of four major work activities. These activities include (1) the removal of the waste inventory from the staging area, (2) decontamination of the containment area, (3) decontamination of the auxiliary equipment, and (4) closure certification testing and documentation.

Waste approvals for disposal of containers will be obtained and the containers will be shipped offsite for disposal.

Since the floor within the container handling area is constructed of concrete coated with a chemical-resistant lining, and since spill cleanup procedures are followed within the building, contamination of soil beneath the building is unlikely. The soil beneath the concrete flooring will be sampled at four locations. Wipe samples will be taken at four locations beneath all staging areas, and at each sump location.

There is no partial closure anticipated for the Container Handling Area. Under no conditions will contaminated materials remain within the Container Handling Area following closure. Since the unit will be closed "clean", no post-closure plan is required. The container handling area will be closed when operations cease at the EDS Facility.

Liquids generated during high-pressure cleaning of the containment areas will be collected within the sumps and pumped into a vacuum truck that will transport the liquids to the treatment system for treatment and disposal, or they will be disposed off-site. No staging of these liquids will be done on site. Precautions will be taken during decontamination procedures to ensure that all such liquid is collected.

The concrete containment area (floor and walls) are not to be removed as part of closure since they may be utilized after closure if the property is sold and used for other purposes. Personnel are required to wear appropriate gear to ensure safety during all stages of closure.

Any of these areas not meeting closure performance standards for soil contamination will be remediated in accordance with Section 2.120.12.1.

Rainwater Accumulation Tank

This tank will be evaluated after closure of the rail car storage area, container storage area, and the unloading and sampling bays because each of these other areas drain to this structure. At that time, water in the tank will be analyzed and disposed of as described above for water in the Sedimentation Basin. Upon removal of water from the tank, concrete cores will be taken from within the tank. Cores will be taken for purposes of allowing the upper inch to be ground down for laboratory analysis using

procedures provided in Section 2.120.105. If these analyses indicate the concrete is contaminated, a remediation plan will be developed and submitted to the MDEQ within 60 calendar days of reviewing the analytical data. Once all surfaces are triple rinsed, each of these areas will be examined visually. Any structural components which can not be contaminated by triple rinsing shall be removed and disposed off site. Otherwise, the tank will be filled with lean concrete grout, including all adjacent piping.

Any of these areas not meeting closure performance standards for soil contamination will be remediated in accordance with Section 2.120.12.1.

Receiving Storage Tanks

Closure of these tanks will be accomplished in the following steps:

1. For each tank the wastewater level and thickness of settled solids will be measured from openings in the top of the tank. Once those measurements are made, wastewater in the tank will be processed through the treatment and disposal system if it is usable, or the wastewater will be vacuum pumped into a tanker or vacuum truck for disposal at a licensed disposal facility. Solids will then be vacuumed into vacuum trucks for offsite disposal.

2. Prior to disposing any of the wastewater or solids, laboratory analysis will be performed to characterize the material to determine if it can be legally accepted by the disposal facility. The types of testing required for characterization will depend on the specific facility's requirements however, as a minimum, testing required will involve those tests needed to complete the Waste Characterization Form provided in Appendix 2.120-5. This characterization process will be used for all wastes to be shipped off site.

3. Waste materials will only be allowed to be transported off site when a written approval is received from a licensed disposal facility. Prior to leaving the site the waste will be manifested indicating the generator's name, address and disposal facility. EDS will sign the manifest as the generator and will provide the manifest to the transporter.

4. Waste materials will not be removed from the tanks or other equipment until a disposal

approval has been obtained. Once waste material has been removed and placed in a transport vehicle it will be removed from the site. No staging of wastes will be conducted.

5. Prior to removing all of the wastewater from the tank, piping leading to and from the tank will be cleaned by triple rinsing with water through these pipes back into the tank. The rinse water will be collected in the tank for disposal as discussed above.

6. Once the wastewater is removed from the tanks, preparations will be made to remove solids from the carbons of the tank and to clean the interior of the tank. These preparations will consist of venting vapors from the tank through the air scrubber unit by displacing vapors using nitrogen. Once the tank is believed to be fully deaired the nitrogen will be released by opening the tank cover and testing the air in the tanks using an LEL (lower explosive limit) meter and a gas detection meter.

7. Triple rinse cleaning procedures will be conducted by standard procedures provided in Appendix 2.120-6, followed by visual inspection to verify the tanks are clean.

8. Sumps, pumps, and piping will all be disassembled as required and triple rinsed in the secondary containment area and removed from the site to a scrap yard or recycling location. The secondary containment floors and walls will be cleaned using high pressure water blasting equipment. All rinse water will be collected in the containment area and either processed through the onsite treatment and disposal system or containerized and transported to a disposal facility.

9. The tank will then be removed and sold or scrapped.

10. After removal of the tank, concrete from the floor and soil from six inches beneath the floor shall be sampled and analyzed for the parameters cited in Section 2.120.7. Any remediation required will be detailed in a Remedial Action Plan to be submitted to the MDEQ within sixty calendar days of verifying the presence of soil contamination. If the soils are found to not be impacted, the corings will be grouted with a cement grout.

11. Records of the tank sale or scrapping and manifests will be collected and reported in the Closure Certification Reports.

12. Once all surfaces are triple rinsed, each of these areas will be examined visually. Any structural components which can not be cleaned by triple rinsing shall be removed and disposed off site. The containment area will then be left as is until a determination has been made as to how the property will be used.

Prior to cleaning any tank, any wastewater in the tank will be emptied through the treatment system and into the deepwell using the system pumps and piping or, if required, these wastewaters will be vacuum pumped into tanker or vacuum trucks for transport and disposal at a licensed disposal facility.

Verification of the wastewater removal will be made using tank instrumentation and manually through a man way or opening in the tank.

Once wastewater has been removed, a determination will be made by physical measurement of how much sludge is present, if any. If sludge is present it will be removed by vacuum pumping into the system's sludge tank or into a truck for offsite disposal.

Once the sludge is removed, or if the tank was found to not contain sludge, the tank will be deaired using existing nitrogen blanket systems, or dry ice procedures until the air in the tank is found to be suitable for entry per the tank cleaning procedure, attached.

Any of these areas not meeting closure performance standards for soil contamination will be remediated in accordance with Section 2.120.12.1.

Oil Water Separators

The oil water separators will be closed after all wastewater in the receiving tanks is processed through the treatment system, or after those tanks have been closed. Closure of the separators will be accomplished as follows:

1. All electrical components will be disconnected.
2. Oil from the units will be pumped into drums and will be recycled.
3. Wastewater from the separators will be pumped through the treatment and disposal system if the system is operable, or it will be pumped into a tanker vehicle for appropriate disposal. No staging of wastes will occur on site.
4. Once oils and wastewaters are removed from these units and associated piping they will be triple rinsed using high pressure water blasting equipment. Rinse water will be retained in the unit and then pumped into a tanker vehicle for appropriate disposal, or processed through the treatment and disposal system if the system is operable.
5. Once the separators have been cleaned they will be sold, or left in place if there is a future use for them.
6. Piping, if any is removed, will be triple rinsed and scrapped.

Any of these areas not meeting closure performance standards for soil contamination will be remediated in accordance with Section 2.120.12.1.

Flocculation tanks, clarifiers, process pumps

These units and associated piping will be closed as described under oil-water separators.

Any of these areas not meeting closure performance standards for soil contamination will be remediated in accordance with Section 2.120.12.1.

Piping

Piping associated with all units to be closed will be drained into the appropriate connected unit prior to closing the unit, removed as required and triple rinsed or triple rinsed, in place. Once all surfaces are triple rinsed, each of these areas will be examined visually. Any structural components which can not be decontaminated by triple rinsing shall be removed and disposed off site. Any piping removed will be scrapped or, if required, disposed of at a licensed landfill.

NaOH and H_2SO_4 Storage Tanks and Pumps

These units will be drained separately into drums or a tanker vehicle for recycling of the separate

reagents. After the reagents have been removed from them, the tanks will be degassed using nitrogen displacement procedures, then triple rinsed. Rinse waters will be contained in drums for appropriate disposal. All cleaned areas shall be inspected visually to confirm they are clean. Any material remaining stained shall be removed and disposed of off-site. Once these tanks are thoroughly cleaned they will be scrapped, sold, or left in place for any approved future use. Pumps in this unit area will be drained, rinsed, sold, scrapped, or left in place for future use.

Any of these areas not meeting closure performance standards for soil contamination will be remediated in accordance with Section 2.120.12.1.

Sludge Tanks and Pumps

Sludges remaining in these tanks will be processed through the filter presses. The tanks will be cleaned and triple rinsed. All cleaned areas shall be inspected visually to confirm they are clean. Any material remaining stained shall be removed and disposed of off-site. Cleaning waters will be processed through the disposal system, if operable, or containerized for appropriate disposal. The tanks will be scrapped, sold, or left in place for an approved future use. The pumps associated with these tanks will be drained, cleaned, and scrapped, sold, or left in place for an approved future use.

Any of these areas not meeting closure performance standards for soil contamination will be remediated in accordance with Section 2.120.12.1.

Filter Presses and Filters

Once the filter presses are no longer needed for closure operations they will be emptied, cleaned, and sold or left in place for an approved future use. Any remaining sludge in the rolloff boxes will be left in place until they can be transported for disposal. Rolloff boxes shall be lined and covered. Filters will be removed from the filter components, placed in plastic bags, and disposed of with the sludges in the rolloff boxes. The filter components will be drained and triple rinsed along with the removal of piping systems. All cleaned surfaces will be visually inspected to confirm they are clean. Any areas remaining stained shall be removed and disposed of off-site. These filter components will be sold or left on site for an approved future use.

Any of these areas not meeting closure performance standards for soil contamination will be remediated in accordance with Section 2.120.12.1.

Brine and Non-Compatible Storage and Receiving Tanks and Pumps

Storage tanks will be emptied of all wastewaters through the treatment system and into the deepwell. Alternatively, if such liquids can not be disposed of in the deepwells, they will be vacuumed from the storage tanks by vacuum truck and disposed of at a licensed disposal facility. Any residuals from these tanks will be vacuumed out and processed through the filter press system. All tanks will be thoroughly triple rinsed internally and removed from the facility and scrapped. All cleaned surfaces will be visually inspected to confirm they are clean. Any areas remaining stained shall be removed and disposed of off-site.

Any of these areas not meeting closure performance standards for soil contamination will be remediated in accordance with Section 2.120.12.1.

Laboratory

Chemicals and any wastewater samples in the onsite laboratory will be lab packed and reused or disposed appropriately. All lab areas will be triple rinsed and visually inspected to verify they are clean.

Any of these areas not meeting closure performance standards for soil contamination will be remediated in accordance with Section 2.120.12.1.

Tank and Equipment Enclosures, Enclosure Walls and Floors, and the General Plant Area

Each of these areas will be triple rinsed using high pressure water blasting equipment and inspected visually. Once all surfaces are triple rinsed, each of these areas will be examined visually. Any structural components which can not be decontaminated by triple rinsing shall be removed and disposed off site. Rinse waters will be pumped into the deepwells, if operable, or they will be pumped into tanker vehicles. Pumps and sump areas within any of these areas will be drained and cleaned.

Any of these areas not meeting closure performance standards for soil contamination will be

remediated in accordance with Section 2.120.12.1.

Deepwell

Closure of the two deepwells can be done independently of other hazardous waste management units at the facility. For purposes of this Plan, closure of the deepwell will be scheduled to start after closure of all other waste management units so the deepwell can be used to dispose rinse and wastewaters if the well is still usable. Closure of the deepwell will not require the use of other plant components.

The first step in closing the deepwell will be to remove and scrap the piping leading to the deepwell. All wastewater in these pipes will be drained and disposed of offsite. The pipes and concrete enclosures will be triple rinsed using high pressure water blasting equipment. All areas rinsed will be visually inspected to verify they have been cleaned. Any remaining stained material shall be disposed of off-site. Rinse water will be pumped into tanker vehicles for appropriate disposal. The concrete trench will be filled with soil compacted to 90 percent of maximum compaction based on ASTMD697.

The deepwell will be closed using the following procedure:

1. The mud tank will be filled with 10 lb/gal brine. Pump approximately 100 gallons, 10 lb/gal brine, if positive pressure exists into the well.
2. A blow out preventer or rotating head will be installed and the tubing will be engaged. The tubing will be worked to release it from the packer. Circulate annulus with 10 lb/gal brine until well is cleared of wastewater.
3. Remove injection tubing from the well. Run in hole with work string tubing and packer retrieving tool. Latch packer and pull the packer out of the hole. Prepare to make up squeeze cement retainer.
4. Run in the hole with the squeeze retainer or packer on work string to approximately 3900 feet. Attempt to pump 150% of calculated cased hole cement volume below retainer or packer into open hole and stop pumping at a squeeze pressure of 1000 psi. Unstring from tool and clear tubing. Pull the tubing out of the hole.
5. Wait on the cement to harden.
6. Run in the hole with the work string to perform section milling of the casing in the top

of the low porosity Trenton Formation.

7. Run in hole with open ended work string to the top of the cement on retainer. Tag cement and pull uphole 1 joint. Pump Class "A" neat slurry in 100 sack increments while pulling 18 joints of tubing after each increment. Use stage and balance method for emplacing plug.
8. Pull uphole to 700' with work string. Flush tubing with fresh water and assure circulation is achieved. Close in the bottom of plug and pressure up on top of plug with approximately 1000 psi.
9. Run in hole and tag up with the top of plug. Pump remaining sacks of Class "A" neat slurry to bring cement to 3 feet below the surface. Use any additional cement as required to assure that cement is circulated to surface.
10. Nipple down blow out preventers. Cut off casing heads and evaluate condition for salvage value. Cut off all casing strings 4' below ground level and weld ½" steel plate over the strings. Weld on appropriate abandonment markings on steel plate.
11. Rig down and move the pulling unit out. Release all support equipment.
12. Cover the cemented deepwell casing with soil.
13. Repeat for the second deepwell.

Any of these areas not meeting closure performance standards for soil contamination will be remediated in accordance with Section 2.120.12.1.

2.120.12.1 Removal of Contaminated Soils

The strategy and procedures for the evaluation of the nature and extent of contaminated surface soils at the property and contaminated sediment/soil within the sedimentation basin, removal of impacted soil/sediment, and verification of effective removal of the subject soil/sediment are as follows.

A sampling grid will be developed consistent with published regulatory guidance[1,2,3] and the samples analyzed for the background parameters noted in Section ***3.4.3.*** Should one or more sediment/soil samples indicate the presence of a constituent at a concentration greater than the respective background value, the location of the noted exceedance will be regridded consistent with the above-noted published guidelines[1,2,3] to define the lateral and vertical extent of contamination. After the lateral and vertical

extent of the contaminated sediments/soils are defined, the sediments/soils impacted by contamination at concentrations that exceed the applicable cleanup criteria as noted in Section 2.120.7 will be excavated and disposed of off-property at a licensed facility. Following excavation, verification of sediment/soil remediation will be completed consisting of the collection of sediment/soil samples from the excavation limits consistent with published guidance[1,2,3] and tested for the subject constituents. Excavation, off-property disposal and verification sampling will continue until the respective applicable Generic Residential Cleanup Criteria are achieved at the excavation limits. Following remediation, the excavations will be backfilled with non-contaminated soils and/or graded as appropriate. A composite sample of the fill material used for backfilling will be tested for the "background" parameters presented in Section *3.4.3* for soils and compared to the applicable Cleanup Criteria to assure that the fill material is not contaminated.

2.120.13 Data Evaluation

Data evaluation will be performed per procedures provided in Appendix 2.120-4. The closure samples will be compared to values provided for closure in Section 2.120.7.

2.120.14 Decontamination

Decontamination procedures will commence after all waste inventory has been removed. A visual inspection will be made and any residuals will be removed by manual or mechanical scraping. The concrete containment areas will then be triple rinsed using high pressure hot water cleaning equipment. This will be followed by visual confirmation that all waste residues have been removed. Any areas remaining stained shall be removed and disposed of off-site.

All auxiliary equipment used during closure activities is to be decontaminated or else containerized in 55-gallon drums, loaded onto a truck, an transported to a landfill or other acceptable disposal facility. All reusable equipment is to be cleaned within the truck wash area located near the exit of the waste reception area followed by visual confirmation that all waste residue have been removed. Wash water generated during decontamination is to be collected from the truck wash area and pumped to the storage units for treatment and disposed in the injection wells or stored and disposed of at an off-site facility if required.

2.120.15 Notice Letters

Examples of letters to be used to provide notice of closure are provided in Appendix 2.120-7.

2.120.16 Schedule

Closure will be completed in the following sequence:

1. All onsite tanker vehicles and rail cars containing wastewater will be shipped offsite for appropriate disposal or they shall be emptied into the receiving tanks.

2. The rail car unloading area will be cleaned and remediated, as required.

3. The rainwater accumulation tank will be emptied into the receiving tanks, cleaned and closed.

4. The container storage area will be closed.

5. The receiving tanks will be closed and then the remainder of equipment will be closed in the following sequence:

   - Primary settling tanks
   - Oil-water separators
   - Secondary settling tanks
   - pH adjustment tanks
   - Flocculation tanks
   - Clarifiers
   - Sludge tanks
   - Filters
   - Filter presses
   - Reagent tanks
   - Laboratory
   - Deepwells

   All associated pumps and piping will be closed within each unit area.

6. The general plant area will then be closed.

7. The detention basin will then be closed.

8. Groundwater monitoring will be performed.

If any identified soil remediation is required it will be performed prior to completing plant closure activities. The following schedule provides for time required to sample and analyze areas that may require soil remediation but no time has been scheduled for the remediation.

EDS shall notify the director, in writing, not more than 60 days before the date on which EDS expects to begin partial or final closure of any or all hazardous waste management units at the treatment, storage, or disposal facility. Such notice shall be given to the WMD at least 45 days prior to beginning closure. A copy of the current or updated partial or final closure plan for the hazardous waste management unit or units that are being closed shall accompany the notification.

Within 60 days of completion of closure of each hazardous waste management unit at a facility, and within 60 days of the completion of final closure, EDS shall submit, to the director, by registered mail, a certification that the hazardous waste management unit or facility, as applicable, has been closed in accordance with the specifications in the approved closure plan. The certification shall be signed by EDS and by an independent registered professional engineer and shall include all of the following supporting documentation:

a) The results of all sampling and analysis.
b) Sampling and analysis procedures.
c) A map showing the location where samples were obtained.
d) Any statistical evaluations of sampling data.
e) A summary of waste types and quantities removed from the site and the destination of these wastes.
f) If soil has been excavated, the final depth and elevation of the excavation and a description of the fill material used.

The anticipated closure schedule is as follows:

Schedule Element	Day Starting Schedule Element	Day Ending Schedule Element
1. Removal of onsite tankers and rail cars		
• Obtain disposal site approvals	1	15
• Disposal	10	15

2. Closure of rail car storage area

• Sampling	10	16
• Analysis	10	26
• Certification of Closure	12	30

3. Rainwater Accumulation Tank

• Emptying tank	10	15
• Sampling	15	18
• Analysis	18	28
• Filling tank with grout	28	35
• Certification of Closure	35	40

4. Container Storage Area

• Inventory existing containers	1	2
• Sampling	1	5
• Analysis	5	15
• Waste disposal approvals	15	25
• Removal of containers	25	30
• Decontamination	30	32
• Decon verification sampling	32	34
• Decon verification analysis	34	50
• Certification of Closure	50	60

5. Closure of Receiving Tanks

• Inventory Sampling, testing, waste disposal approval	1	20
• Wastewater removal	20	35
• Sludge removal	22	35
• Tank cleaning	22	40
• Tank cleaning verification sampling	40	44

• Tank cleaning lab analysis	44	54
• Scrubber Removal	54	54
• Tank removal	54	65
• Cleaning of containment area, and sump area	65	70
• Sampling for Verification of Clean Closure of Secondary Containment Area	70	72
• Analysis for verification samples	72	82
• Certification of Closure	82	100

6. Primary settling tanks

• Inventory sampling, testing, waste disposal approval	1	32
• Wastewater removal	32	36
• Sludge removal	36	38
• Tank cleaning	38	45
• Tank cleaning - verification sampling	45	46
• Tank cleaning - lab analysis	46	56
• Scrubber removal	56	56
• Tank removal	56	60
• Cleaning of containment area	60	65
• Sampling containment area	65	66
• Lab analysis - containment area	66	76
• Certification of Closure	76	90

7. Oil-Water Separators

• Oil Removal for reuse	1	5
• Inventory, sampling, testing, waste disposal approval	1	15
• Wastewater Removal	36	38

• Cleaning Separators	38	40
• Separators - Verification sampling	40	42
• Separators - Verification testing	42	52
• Separator removal	52	60
• Cleaning Containment Area	60	65
• Sampling Containment Area	65	66
• Testing Containment Area	66	86
• Certification of Closure	86	90

8. Secondary Settling Tanks, Flocculation tanks, Clarifiers, Sludge Tanks, Filters, Filter Presses

• Inventory, sample, test, obtain waste disposal approvals	1	15
• Wastewater and sludge removal	38	45
• Cleaning of units	45	50
• Cleaning - verification sampling	50	52
• Cleaning - verification analysis	52	62
• Equipment and Scrubber Removal	62	72
• Cleaning Containment area	65	75
• Sampling Containment areas	70	75
• Testing Containment areas	75	85
• Certification of Closure	85	100

9. Reagent tanks

• Inventory, analysis, obtain disposal approval, remove product for reuse	1	15
• Clean and rinse tanks	15	18
• Cleaning - verification samples	18	18
• Cleaning - verification analysis	18	28
• Tank and Scrubber removal, reuse offsite	28	30
• Clean containment area	28	30

• Sample Containment area	30	35
• Analyze containment samples	35	45
• Certification of Closure	45	50
10. Laboratory		
• Inventory, sampling	1	5
• Analysis	5	15
• Closure - Lab packing, cleaning	15	30
• Certification of Closure	30	45
11. Unloading and Sampling Bay Closure		
• Clean general area	100	105
• Sample surface areas	105	110
• Analyze samples	110	120
• Certification of Closure	120	130
12. Deepwell Closure	100	130
13. General Plant Area including roads, sewers, and catch basins		
• Sampling	100	105
• Sample analyses	105	115
• Certification of Closure	115	120
14. Detention Basin Closure		
• Sampling	100	105
• Sample analyses	105	115
• Certification of Closure	115	120

15. Groundwater Monitoring and Soil Sampling and Analyses

• Sampling	100	105
• Sample analyses	105	115
• Certification of Closure	115	120

Total Closure Period **120 days**

16. Certification Report: Shall be submitted within 60 days of the completion of closure.

2.120.17 Characterization of Wastes for Offsite Disposal

All wastes to be disposed offsite shall be characterized for all of the parameters on the Waste Characterization Form provided in Appendix 2.120-5 as a minimum. Additional testing parameters may be required for specific disposal sites per that specific disposal company's requirements. Such additional testing shall be performed as required by those specific companies and all additional testing shall be documented in the Closure Certification Report.

Sludges, sediments, rinse waters and contaminated soils must be characterized as listed hazardous waste unless analysis shows otherwise.

2.120.18 References

Howard, P.H. (Ed). 1990. Handbook of environmental fate and exposure data for organic chemicals, Vol. II Solvents. Chelsea, Michigan, Lewis Publishing Inc. 546 pp.

MDNR. 1994. Guidance Document, Verification of Soil Remediation. Lansing, MI: Michigan Dept. of Natural Resources, 42 pages, Revision 1.

MDEQ. 1999. Part 201 Generic Cleanup Criteria and Screening Levels Developed under the Authority of the Natural Resources and Environmental Protection Act, 1994 PA 451, as amended, May 28, 1999.

U.S. Environmental Protection Agency. 1990. Test methods for evaluating solid wastes. EPA-530,

SW 846 3rd Edition. Revision 1. November 1990.

U.S. EPA, Office of Solid Waste Management Division, Statistical Analysis of Groundwater Monitoring Data at RCRA Facilities, Interim Final Guidance, EPA, Washington D.C., April 1989.

TABLE 2.120-1

AIR MONITORING PARAMETERS

ORGANICS - MINIMUM DETECTION LIMITS
WAYNE COUNTY, MICHIGAN

ORGANIC	$\mu g/M^3$
1,1,1-Trichloroethane	1.0
1,1,2,2-Tetrachloroethane	0.10
1,1,2-Trichloroethane	0.10
1,1-Dichloroethane	1.0
1,1-Dichloroethene	1.0
1,2-Dichloroethane	0.2
1,2-Dichloroethene	1.0
1,2-Dichloroepropane	1.0
1,3-Dichloropropene	1.0
Benzene	0.04
Bromodichloromethane	1.0
Bromoform	1.0
Carbon Tetrachloride	0.25
Chlorobenzene	1.0
Chloroform	0.05
Dibromochloromethane	1.0
Ethylbenzene	1.0
Methylene Chloride	1.0
Styrene	1.0
Tetrachloroethene	0.1
Toluene	1.0
Trichloroethene	0.1
Xylene	1.0

TS:jk
a:organics.ts(6)
12-14-89

Table 2.120-1

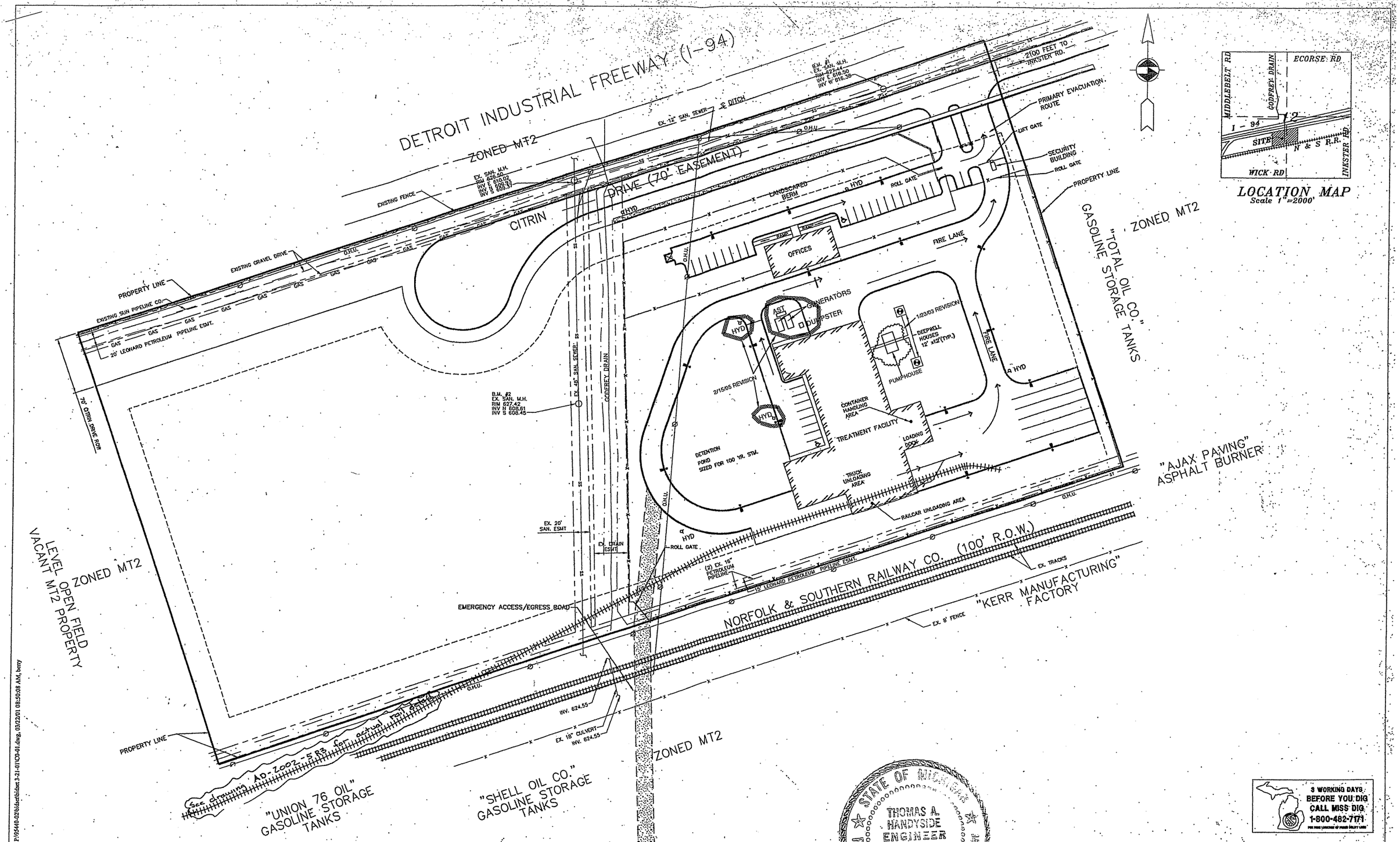
DETROIT INDUSTRIAL FREEWAY (I-94)
ZONED MT2
CITRIN DRIVE (70' EASEMENT)
EXISTING FENCE
EXISTING GRAVEL DRIVE
PROPERTY LINE
EXISTING SUN PIPELINE CO.
20' LEONARD PETROLEUM PIPELINE ESMT.
70' CITRIN DRIVE ROW
EX. 12" SAN. SEWER
℄ DITCH
2100 FEET TO INKSTER RD.
PRIMARY EVACUATION ROUTE
LIFT GATE
SECURITY BUILDING
ROLL GATE
PROPERTY LINE
LANDSCAPED BERM
OFFICES
FIRE LANE
GENERATORS
DUMPSTER
AST
HYD
1/23/03 REVISION
DEEPWELL HOUSES 12' x12' (TYP.)
PUMPHOUSE
2/15/05 REVISION
CONTAINER HANDLING AREA
TREATMENT FACILITY
LOADING DOCK
DETENTION POND SIZED FOR 100 YR. STM.
TRUCK UNLOADING AREA
RAILCAR UNLOADING AREA
"TOTAL OIL CO." GASOLINE STORAGE TANKS
"AJAX PAVING" ASPHALT BURNER
"KERR MANUFACTURING" FACTORY
NORFOLK & SOUTHERN RAILWAY CO. (100' R.O.W.)
EX. TRACKS
EX. 8' FENCE
EX. 48" SAN. SEWER
GODFREY DRAIN
EX. 20' SAN. ESMT
EX. DRAIN ESMT
EMERGENCY ACCESS/EGRESS ROAD
INV. 624.55
EX. 18" CULVERT INV. 624.55
LEVEL OPEN FIELD VACANT MT2 PROPERTY
"UNION 76 OIL" GASOLINE STORAGE TANKS
"SHELL OIL CO." GASOLINE STORAGE TANKS
See drawing AD-2002-5R3 for actual rail detail
LOCATION MAP
Scale 1"=2000'
MIDDLEBELT RD
GODFREY DRAIN
ECORSE RD
I - 94
SITE
N & S R.R.
WICK RD
INKSTER RD
3 WORKING DAYS BEFORE YOU DIG CALL MISS DIG 1-800-482-7171
STATE OF MICHIGAN
THOMAS A. HANDYSIDE
ENGINEER
19834
Registered Professional Engineer
LEGEND
EXIST SAN SEWER
SAN SEWER
EXIST STORM SEWER
STORM SEWER
EXIST WATER MAIN
WATER MAIN
EXIST UG ELEC.
EXIST UG GAS
EXIST UG TELE.
EXIST FENCE
EXIST MANHOLE
EXIST CATCH BASIN
EXIST CULVERT
EXIST FIRE HYDRANT
EXIST GATEVALVE
EXIST VALVE IN BOX
EXIST LIGHT POLE
EXIST POLE
EXIST GUY
EXIST SIGN
SECTION CORNER
SOIL BORE
EXIST CONTOURS
CONTOURS
EXIST SPOT ELEVATION
CULVERT
GATEWELL
VALVE IN BOX
FIRE HYDRANT
STORM MH & CB
SANITARY MANHOLE
BARRIER FREE SYMBOL
SPOT ELEVATION
EXISTING SUN PIPELINE GAS LINE
VEHICLE EVACUATION ROUTE
WETLAND LINE
PROPERTY LINE
SILT FENCE
OVERHEAD UTILITY
UNCOVERED RAIN COLLECTION AREA
BUILDING
REV. 2/15/05 AS-BUILT
REV. 1/23/03
3/20/01 BID
SCALE 1"=50'-0"
DRAWN BY: JJJ
CHECKED BY: IMN
SCALED:
ENVIRONMENTAL DISPOSAL SYSTEMS, INC.
CITRIN DRIVE TREATMENT FACILITY
ROMULUS, MICHIGAN
EVACUATION ROUTES AND FIRE HYDRANT LOCATIONS
Ayres, Lewis, Norris & May, Inc.
Engineers • Planners • Surveyors
3959 Research Park Drive
Ann Arbor, Michigan 48108
(734) 761-1010 phone • (734) 761-1200 fax
PROJ. NUMBER: 95440-02
SHEET: FIGURE 2.120-1
(C1.00)

LEGEND

RT	RECEIVING TANKS
ST	SLUDGE STORAGE TANKS
PST	PRIMARY SETTLING TANKS
FFT	FLOCCULATION TANKS
IPC	INCLINED PLATE CLARIFIER
OWS	OIL/ H_2O SEPARATOR
CF	CARTRIDGE FILTER
STP	SLUDGE TRANSFER PUMP
SST	SECONDARY STORAGE TANK
FP	FILTER PRESS
T	TRANSFER PUMP
SP	SLUDGE PUMP
P	PROCESS PUMP

LEGEND

- CONTAINMENT WALLS, TOP OF WALL EL. 628.50
- CURBING, TOP OF CURBING EL. 628.50
- TOP OF FOUNDATION WALL EL. 628.33
- INDICATES LOCATION AND EXTENT OF SQUIRT SHIELD. SHIELD SHALL BE OF SUFFICENT HEIGHT AS TO PREVENT THE MIGRATION OF A SQUIRT FROM THE TANK WALL NOT ENCLOSED BY THE CONTAINMENT APRON.

PLAN
SCALE: 1/8"=1'-0"

NOTES:

1. ALL CONTAINMENT WALLS AND CONTAINMENT FLOORS SHALL BE LINED WITH CHEMICALLY RESISTANT HIGH PERFORMANCE POLYMERIC COATING (ELASTIC-LINER IF BY KCC CORROSION CONTROL, HOUSTON TX). SEE JOINT DETAILS, SHEET S0.01
2. CHEMICALLY RESISTANT WATERSTOPS SHALL BE PROVIDED AT ALL CONSTRUCTION JOINTS. SEE DETAILS, SHEET S0.01.
3. SQUIRT SHIELD SHALL BE CONSTRUCTED OF PREMIUM GRADE DERAKANE 411-45 VINYL ESTER RESIN AND DOUBLE NEXUS SYNTHETIC VEIL IN CORROSION BARRIER. ISOPHTHALIC POLYESTER RESIN IN STRUCTURAL LAYER.

STATE OF MICHIGAN
ISHWAR M. NAIK
ENGINEER
No. 22185
LICENSED PROFESSIONAL ENGINEER

	2/99	REVISION 1
	8/97	ORIGINAL ISSUE

SCALE 1/8"=1'-0" | DRAWN BY L.D.S. | CHECKED BY I. NAIK | DATE

ENVIRONMENTAL DISPOSAL SYSTEMS, INC.
CITRIN DRIVE TREATMENT FACILITY
ROMULUS, MICHIGAN

CONTAINMENT WALLS, CURBS AND STORAGE PLAN

Ayres, Lewis, Norrie & May, Inc.
Engineers • Planners • Surveyors
3950 Research Park Drive
Ann Arbor, Michigan 48108
(313) 761-1010 phone (313) 761-1200 fax

PROJ. NUMBER: 95440-02
SHEET: SAF1

Tue Aug 24 15:22:30 1999 paz

ENVIRONMENTAL DISPOSAL SYSTEMS, INC.

EPA CLASS I DEEP DISPOSAL WELL
Romulus, Michigan

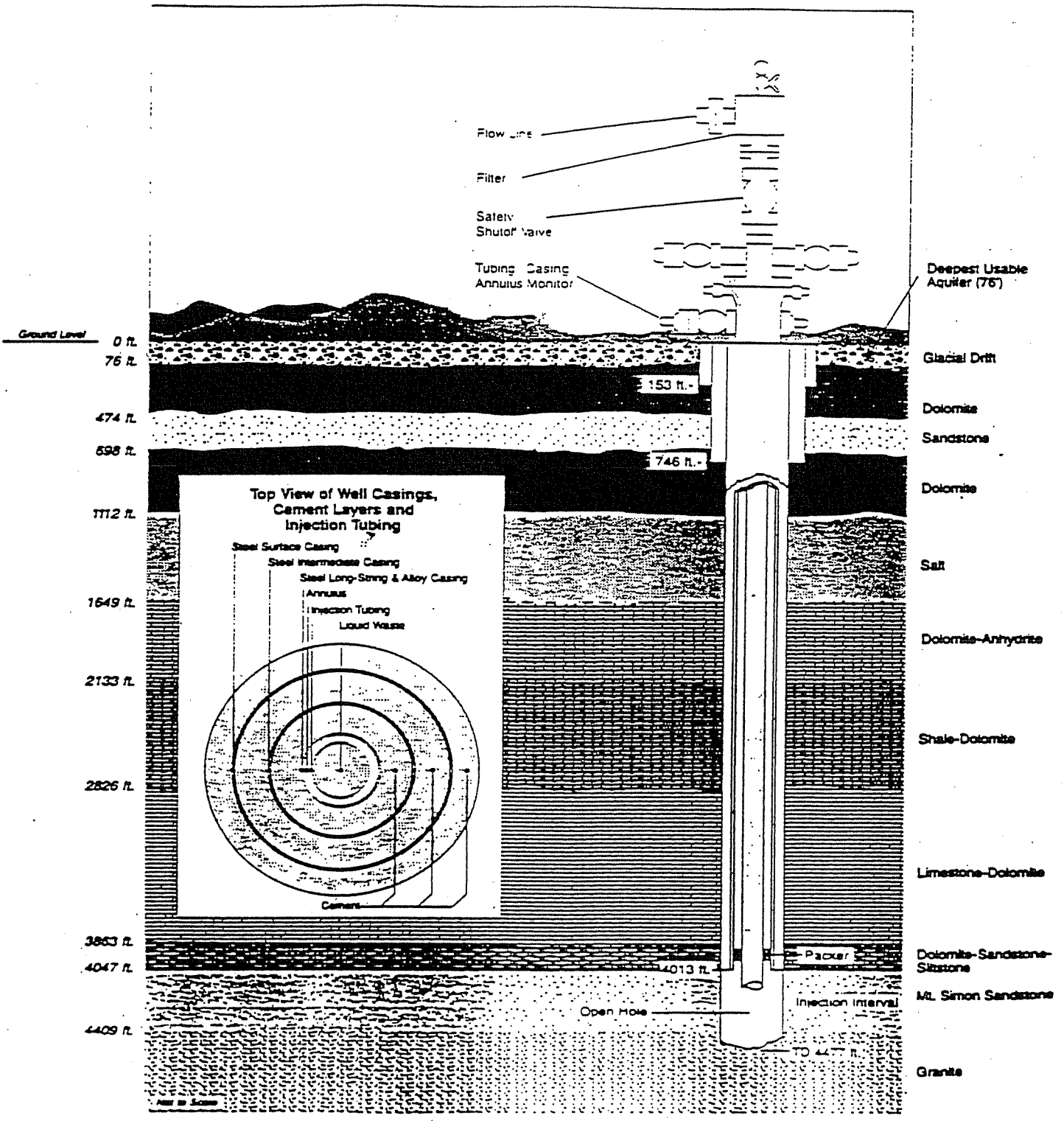

Deepwell Cross-Section

REV. 2, 1-98

Figure 2.120-3

REV. 1, 8-97

HAZARDOUS WASTE MANAGEMENT UNIT AREA

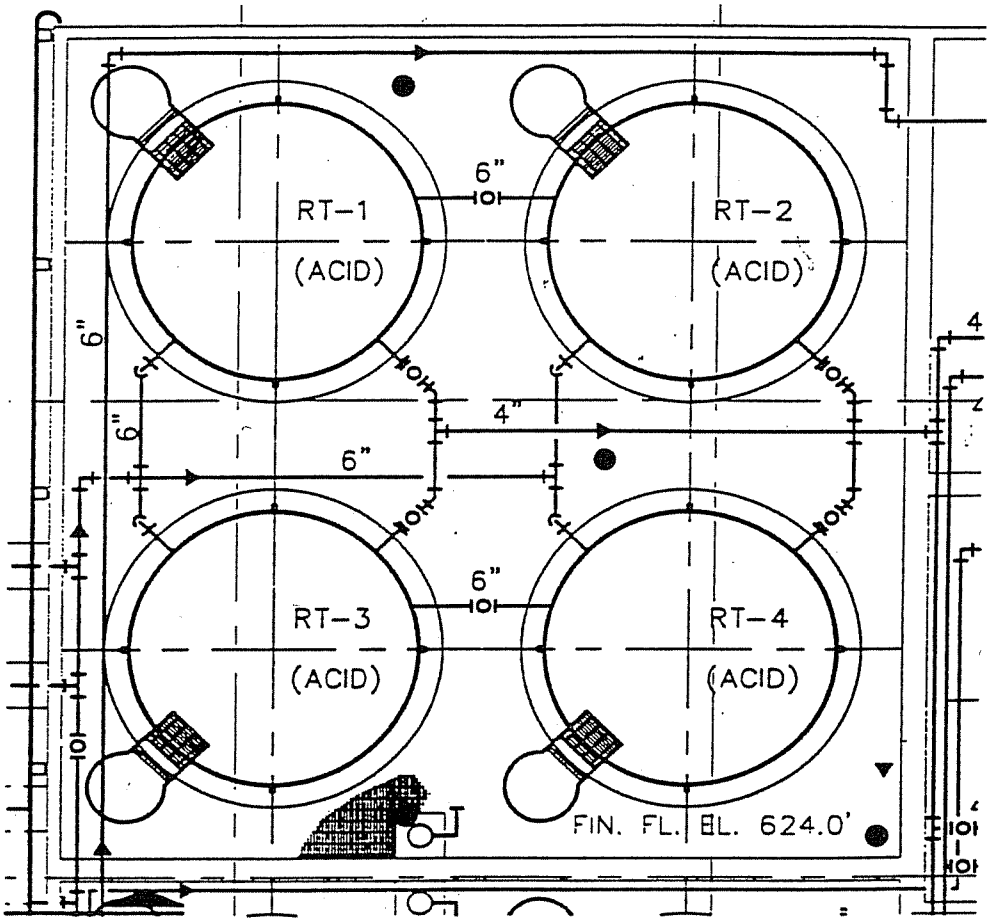

RECEIVING TANKS RT 1-4

SCALE: 1/8"=1'-0"

1. Refer to Drawing/Sheet M1.02 on Figure 2.120-16 for unit locations and reference to cross-sections of these unit areas.
2. Proposed Sampling locations are designated by the symbol "●."

Project No. 95440-02 Project Name EDS - CITRIN DRIVE

Task RECEIVING TANKS RT 1-4 Date 6/24/97

Dept. MECH Designed By PAZ Checked by IMN

Ayres, Lewis, Norris & May, In
Engineers • Planners • Surveyors
3959 Research Park Drive
Ann Arbor, Michigan 48108
(313) 761-1010

Figure 2.120-4

REV. 2, 1-98

REV. 1, 8-97

HAZARDOUS WASTE MANAGEMENT UNIT AREA

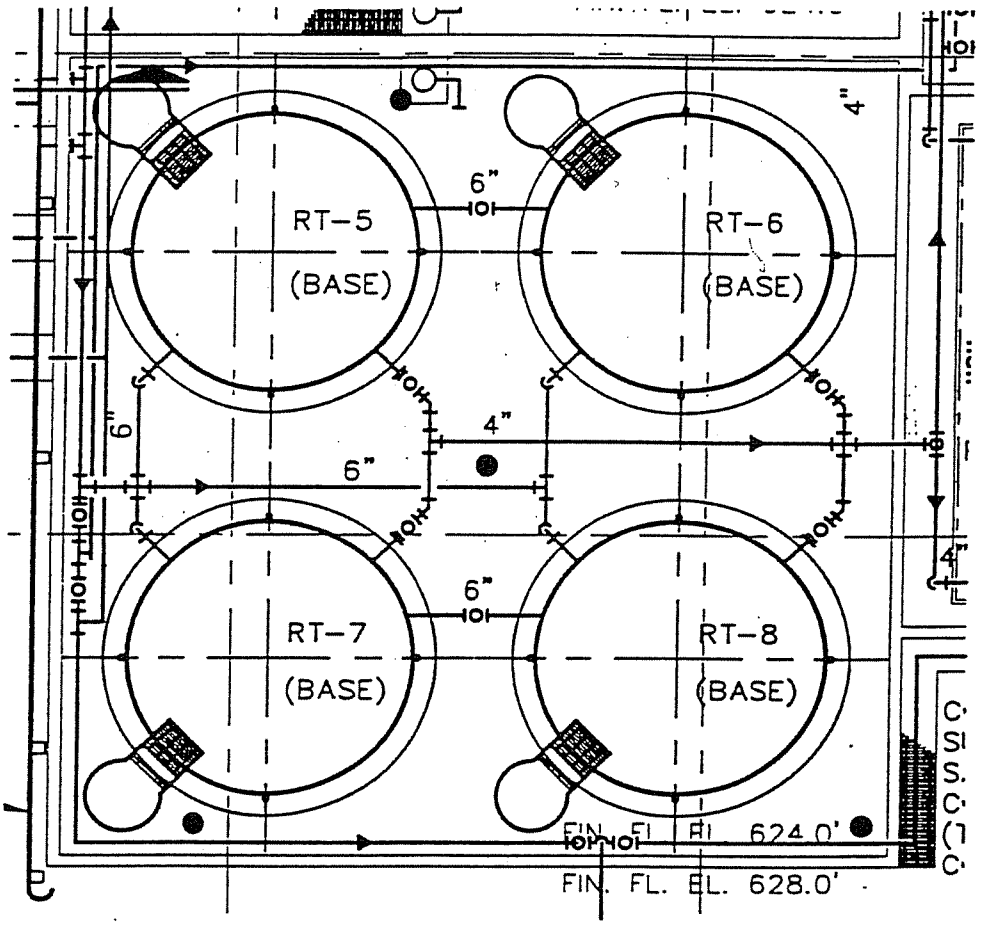

RECEIVING TANKS RT 5-8

SCALE: 1/8"=1'-0"

1. Refer to Drawing/Sheet M1.02 on Figure 2.120-16 for unit locations and reference to cross-sections of these unit areas.
2. Proposed Sampling locations are designated by the symbol "●."

Project No. 95440-02 Project Name EDS - CITRIN DRIVE

Task RECEIVING TANKS RT 5-8 Date 6/24/97

Dept. MECH Designed By PAZ Checked by IMN

Ayres, Lewis, Norris & May, Inc.
Engineers • Planners • Surveyors
3989 Research Park Drive
Ann Arbor, Michigan 48108
(313) 761-1010

Figure 2.120-5

REV. 2, 1-98

REV. 1, 8-97

HAZARDOUS WASTE MANAGEMENT UNIT AREA

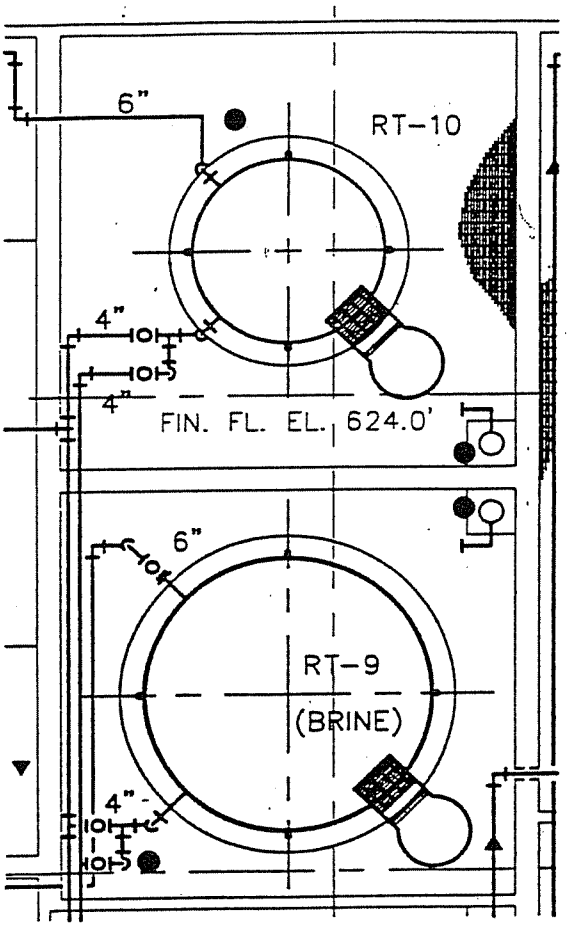

RECEIVING TANKS RT 9 & 10

SCALE: 1/8"=1'-0"

1. Refer to Drawing/Sheet M1.02 on Figure 2.120-16 for unit locations and reference to cross-sections of these unit areas.
2. Proposed Sampling locations are designated by the symbol "●."

Project No. 95440-02 Project Name EDS - CITRIN DRIVE

Task RECEIVING TANKS RT 9,10 Date 6/24/97

Dept. MECH Designed By PAZ Checked by IMN

Ayres, Lewis, Norris & May, Inc.
Engineers • Planners • Surveyors
3859 Research Park Drive
Ann Arbor, Michigan 48108
(313) 761-1010

Figure 2.120-6

REV. 2, 1-98 REV. 1, 8-97

HAZARDOUS WASTE MANAGEMENT UNIT AREA

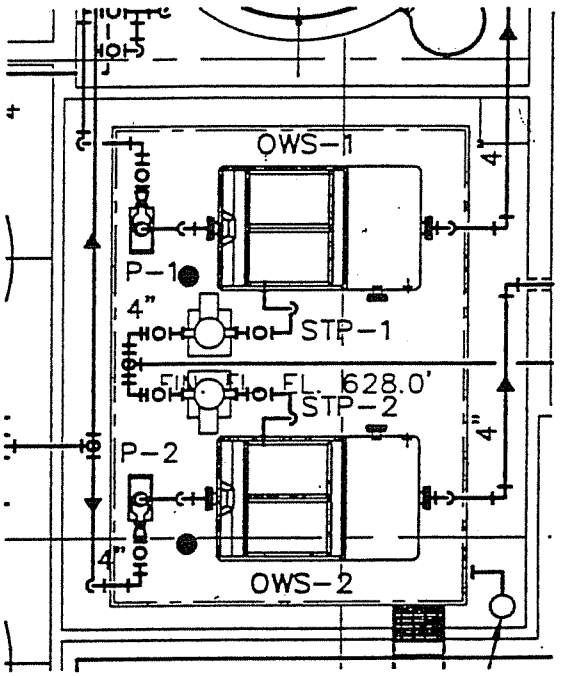

OIL WATER SEPARATORS OWS 1 & 2

SCALE: 1/8"=1'-0"

1. Refer to Drawing/Sheet M1.02 on Figure 2.120-16 for unit locations and reference to cross-sections of these unit areas.
2. Proposed Sampling locations are designated by the symbol "●."

Project No. 95440-02 Project Name EDS - CITRIN DRIVE

Task OIL WATER SEPARATORS OWS 1,2 Date 6/24/97

Dept. MECH Designed By PAZ Checked by IMN

Ayres, Lewis, Norris & May, In
Engineers • Planners • Surveyors
3950 Research Park Drive
Ann Arbor, Michigan 48108
(313) 761-1010

REV. 2, 1-98

Figure 2.120-7

REV. 1, 8-97

HAZARDOUS WASTE MANAGEMENT UNIT AREA

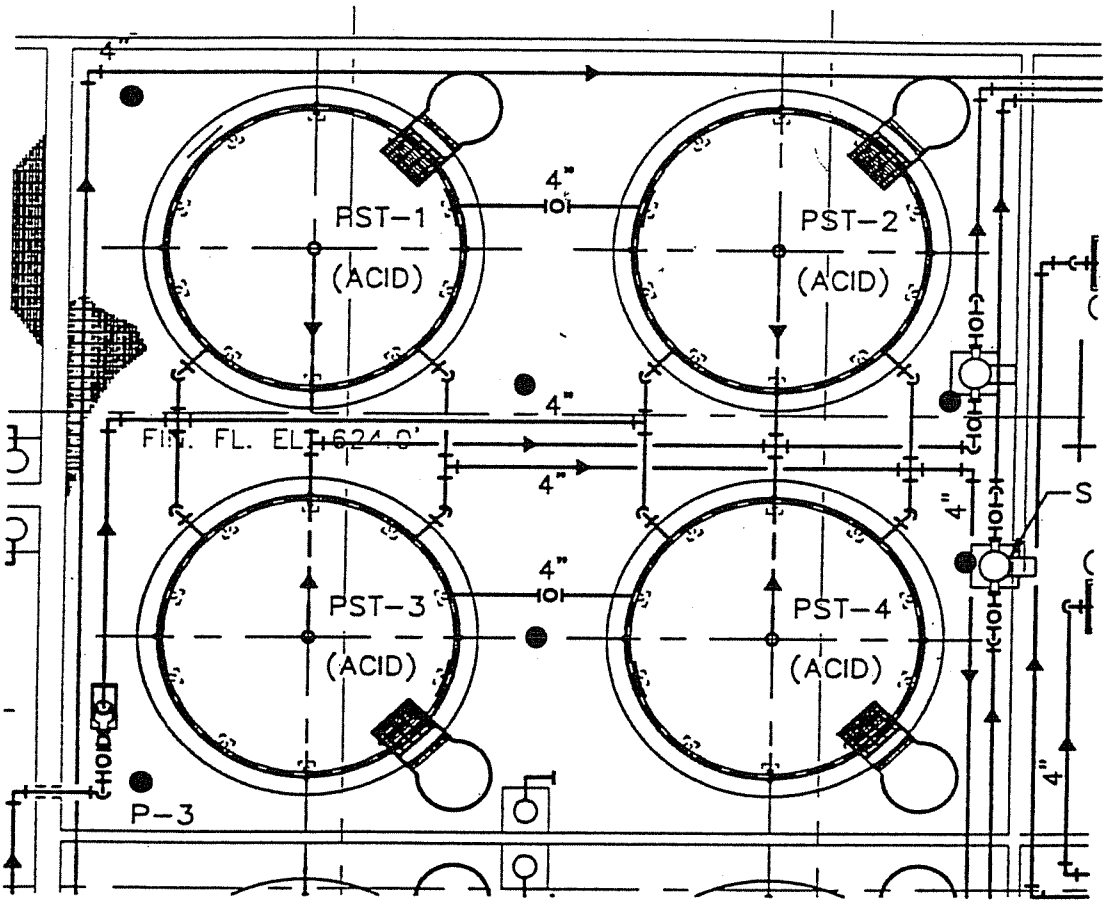

PRIMARY SETTLING TANKS PST 1-4

SCALE: 1/8"=1'-0"

1. Refer to Drawing/Sheet M1.02 on Figure 2.120-16 for unit locations and reference to cross-sections of these unit areas.
2. Proposed Sampling locations are designated by the symbol "●."

Project No. 95440-02 Project Name EDS - CITRIN DRIVE

Task PRIMARY SETTLING TANKS PST 1-4 Date 6/24/97

Dept. MECH Designed By PAZ Checked by IMN

Ayres, Lewis, Norris & May, Inc
Engineers • Planners • Surveyors
3959 Research Park Drive
Ann Arbor, Michigan 48108
(313) 761-1010

Figure 2.120-8

REV. 2, 1-98

REV. 1, 8-97

HAZARDOUS WASTE MANAGEMENT UNIT AREA

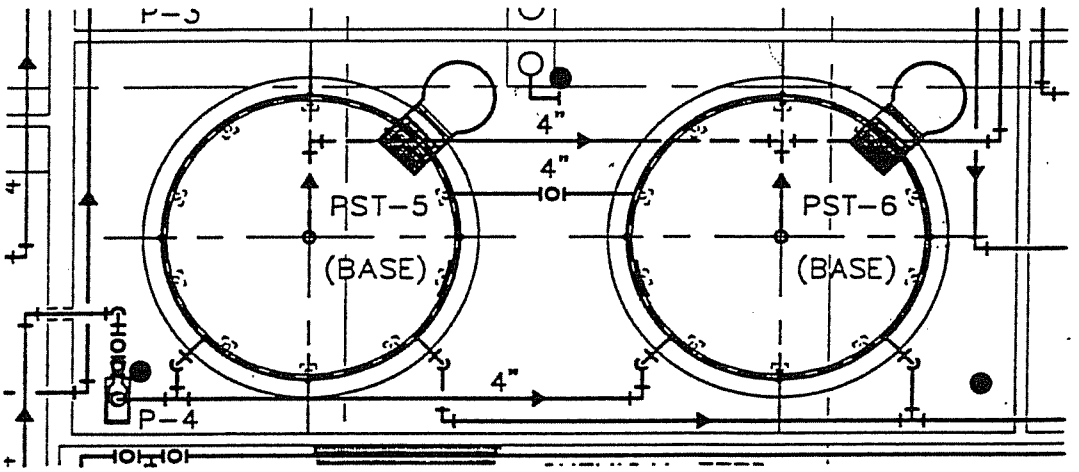

PRIMARY SETTLING TANKS PST 5 & 6

SCALE: 1/8"=1'-0"

1. Refer to Drawing/Sheet M1.02 on Figure 2.120-16 for unit locations and reference to cross-sections of these unit areas.
2. Proposed Sampling locations are designated by the symbol "●."

Project No. 95440-02 Project Name EDS - CITRIN DRIVE

Task PRIMARY SETTLING TANKS PST 5,6 Date 6/24/97

Dept. MECH Designed By PAZ Checked by IMN

Ayres, Lewis, Norris & May, Inc
Engineers • Planners • Surveyors
3959 Research Park Drive
Ann Arbor, Michigan 48108
(313) 761-1030

Figure 2.120-9

REV. 2, 1-98

REV. 1, 8-97

HAZARDOUS WASTE MANAGEMENT UNIT AREA

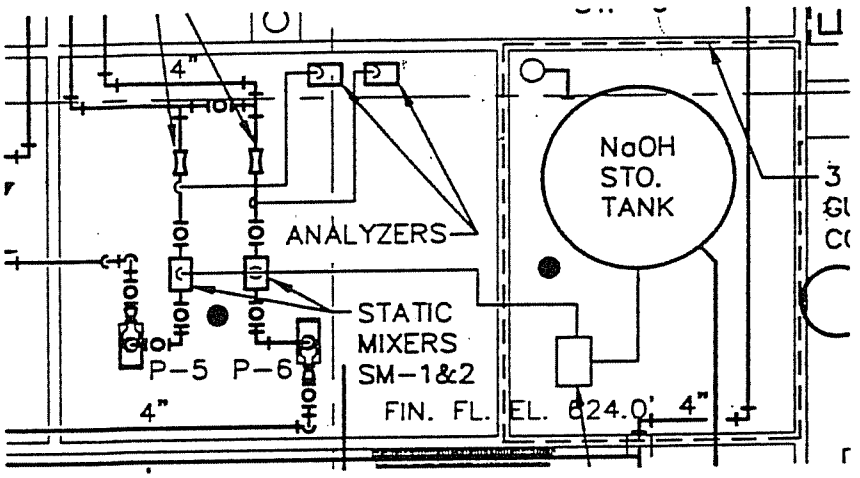

SODIUM HYDROXIDE STORAGE TANK

SCALE: 1/8"=1'-0"

1. Refer to Drawing/Sheet M1.02 on Figure 2.120-16 for unit locations and reference to cross-sections of these unit areas.
2. Proposed Sampling locations are designated by the symbol "●."

Project No. 95440-02 Project Name EDS - CITRIN DRIVE

Task SODIUM HYDROXIDE STORAGE TANK Date 6/24/97

Dept. MECH Designed By PAZ Checked by IMN

Ayres, Lewis, Norris & May, I
Engineers • Planners • Surveyors
3859 Research Park Drive
Ann Arbor, Michigan 48108
(313) 761-1010

Figure 2.120-10

REV. 2, 1-98

REV. 1, 8-97

HAZARDOUS WASTE MANAGEMENT UNIT AREA

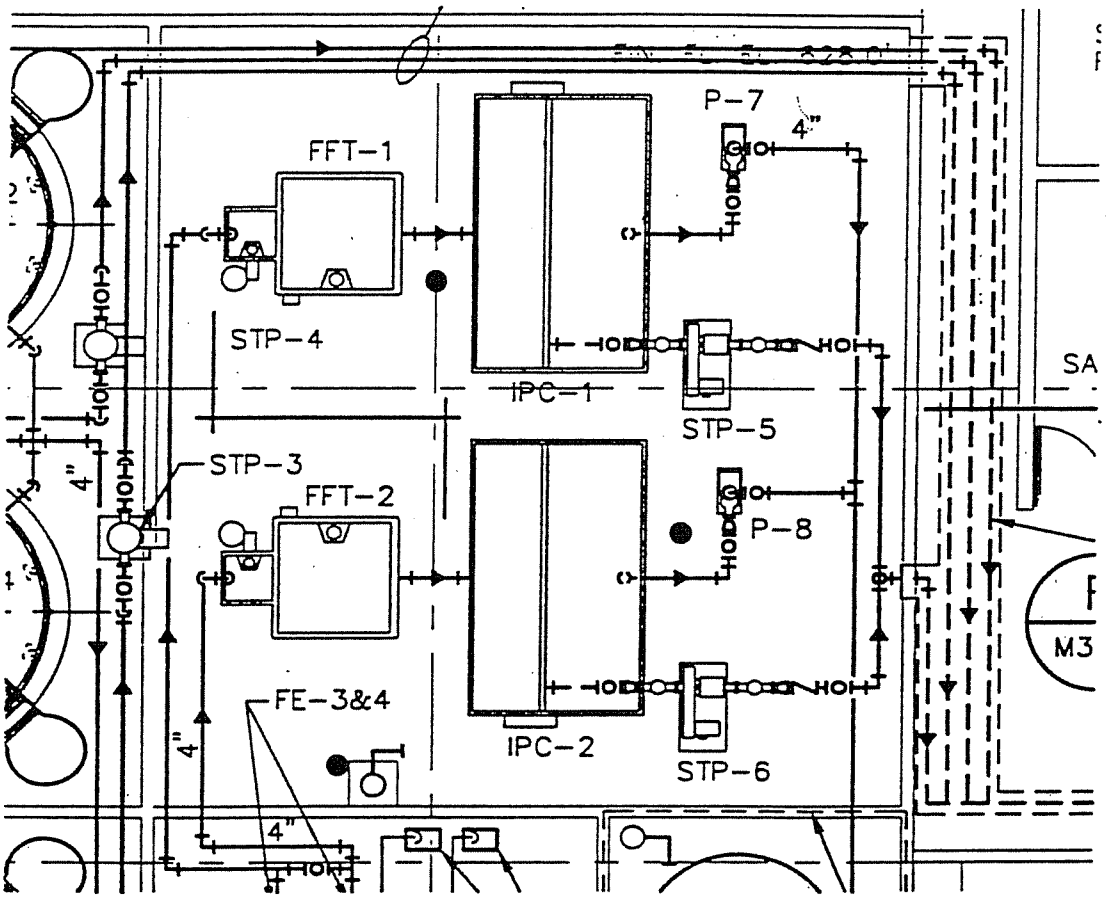

INCLINED PLATE CLARIFIER IPC 1 & 2

SCALE: 1/8"=1'-0"

1. Refer to Drawing/Sheet M1.02 on Figure 2.120-16 for unit locations and reference to cross-sections of these unit areas.
2. Proposed Sampling locations are designated by the symbol "●."

Project No. 95440-02 Project Name EDS - CITRIN DRIVE

Task INCLINED PLATE CLARIFIER IPC 1,2 Date 6/24/97

Dept. MECH Designed By PAZ Checked by IMN

Ayres, Lewis, Norris & May, In
Engineers • Planners • Surveyors
3959 Research Park Drive
Ann Arbor, Michigan 48108
(313) 761-1010

Figure 2.120-11

REV. 2, 1-98

HAZARDOUS WASTE MANAGEMENT UNIT AREA

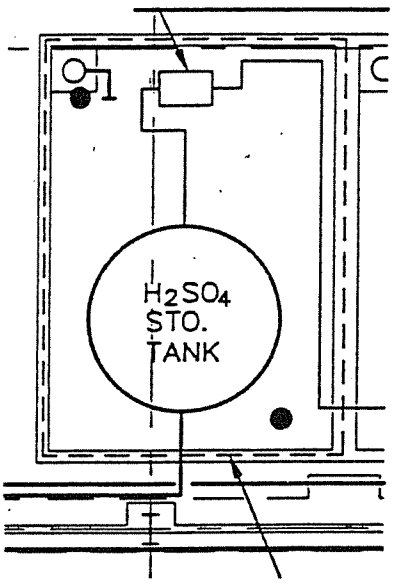

SULFURIC ACID STORAGE TANK

SCALE: 1/8"=1'-0"

1. Refer to Drawing/Sheet M1.02 on Figure 2.120-16 for unit locations and reference to cross-sections of these unit areas.
2. Proposed Sampling locations are designated by the symbol "●."

Project No. 95440-02 Project Name EDS - CITRIN DRIVE

Task SULFURIC ACID STORAGE TANK Date 6/24/97

Dept. MECH Designed By PAZ Checked by IMN

Ayres, Lewis, Norris & May, Inc
Engineers • Planners • Surveyors
3859 Research Park Drive
Ann Arbor, Michigan 48108
(313) 761-1010

REV. 2, 1-98

Figure 2.120-12

REV. 1, 8-97

HAZARDOUS WASTE MANAGEMENT UNIT AREA

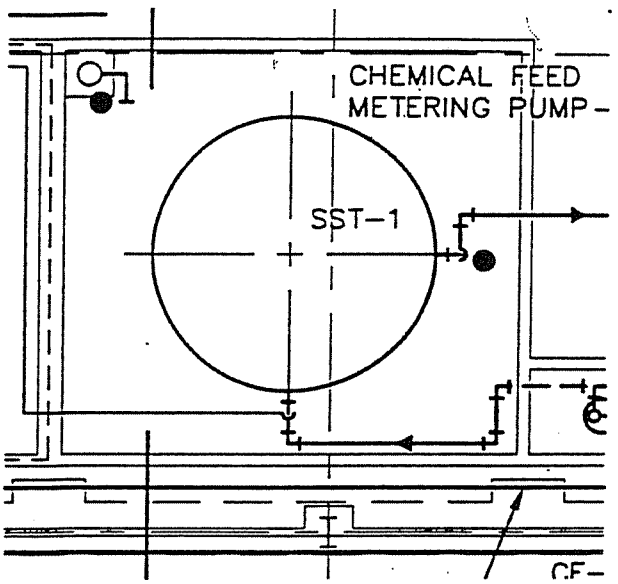

SECONDARY SETTLING TANK SST-1

SCALE: 1/8"=1'-0"

1. Refer to Drawing/Sheet M1.02 on Figure 2.120-16 for unit locations and reference to cross-sections of these unit areas.
2. Proposed Sampling locations are designated by the symbol "●."

Project No. 95440-02 Project Name EDS - CITRIN DRIVE

Task SECONDARY SETTLING TANK SST-1 Date 6/24/97

Dept. MECH Designed By PAZ Checked by IMN

REV. 2, 1-98

Ayres, Lewis, Norris & May, Inc
Engineers • Planners • Surveyors
3958 Research Park Drive
Ann Arbor, Michigan 48108
(313) 761-1010

Figure 2.120-13

HAZARDOUS WASTE MANAGEMENT UNIT AREA

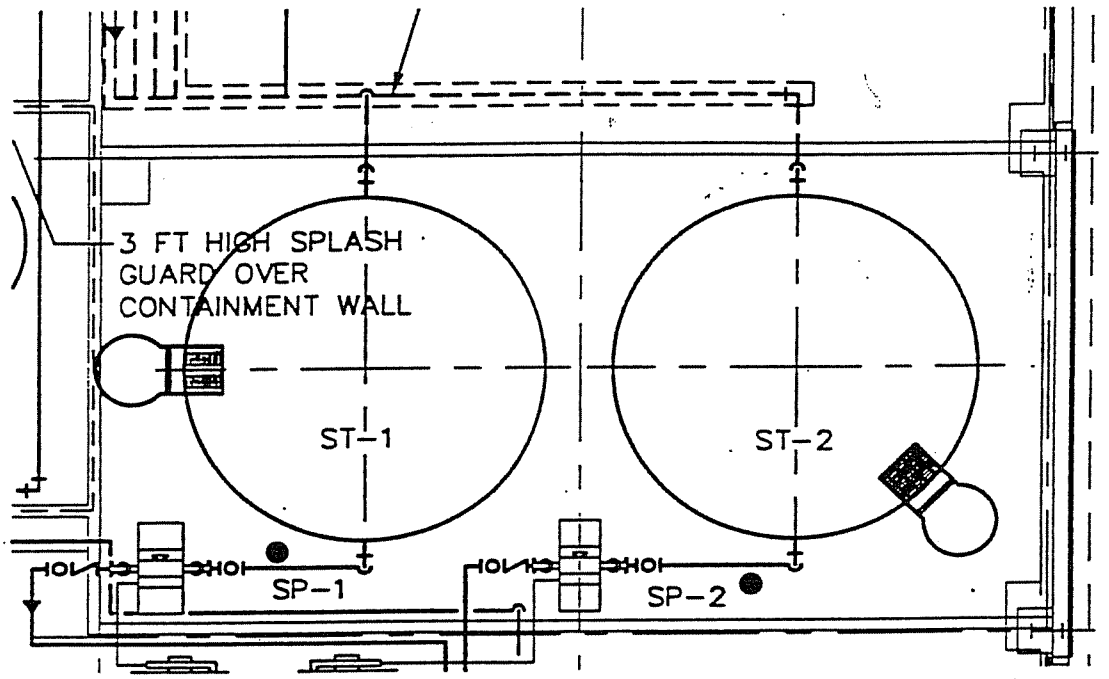

SLUDGE STORAGE TANKS ST 1 & 2

SCALE: 1/8"=1'-0"

1. Refer to Drawing/Sheet M1.02 on Figure 2.120-16 for unit locations and reference to cross-sections of these unit areas.
2. Proposed Sampling locations are designated by the symbol "●."

Project No. 95440-02 Project Name EDS - CITRIN DRIVE

Task SLUDGE STORAGE TANKS ST 1,2 Date 6/24/97

Dept. MECH Designed By PAZ Checked by IMN

Ayres, Lewis, Norris & May, Inc
Engineers • Planners • Surveyors
3959 Research Park Drive
Ann Arbor, Michigan 48108
(313) 761-1010

Figure 2.120-14

REV 2. 1-98

HAZARDOUS WASTE MANAGEMENT UNIT AREA

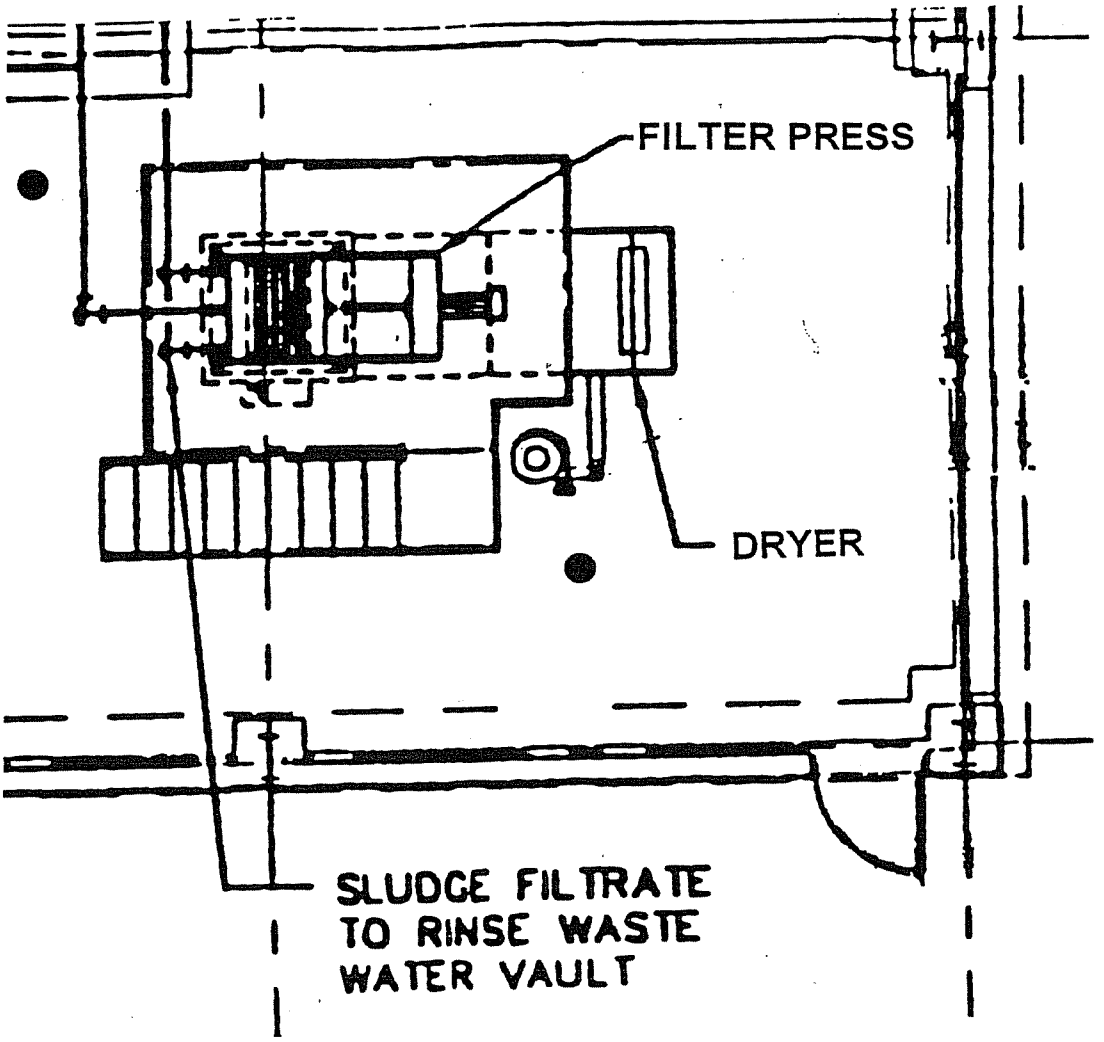

FILTER PRESS AND DRYER

SCALE: 1/8"=1'-0"

1. Refer to Drawing/Sheet M1.02 on Figure 2.120-16 for unit locations and reference to cross-sections of these unit areas.
2. Proposed Sampling locations are designated by the symbol "●."

Project No. 95440-02 Project Name EDS - CITRIN DRIVE

Task FILTER PRESS AND DRYER Date 6/24/97

Dept. MECH Designed By PAZ Checked by IMN

REV. 2, 1-98

Ayres, Lewis, Norris & May.
Engineers • Planners • Surveyors
3858 Research Park Drive
Ann Arbor, Michigan 48108
(313) 761-1010

Figure 2.120-15

REV. 2, 1-98

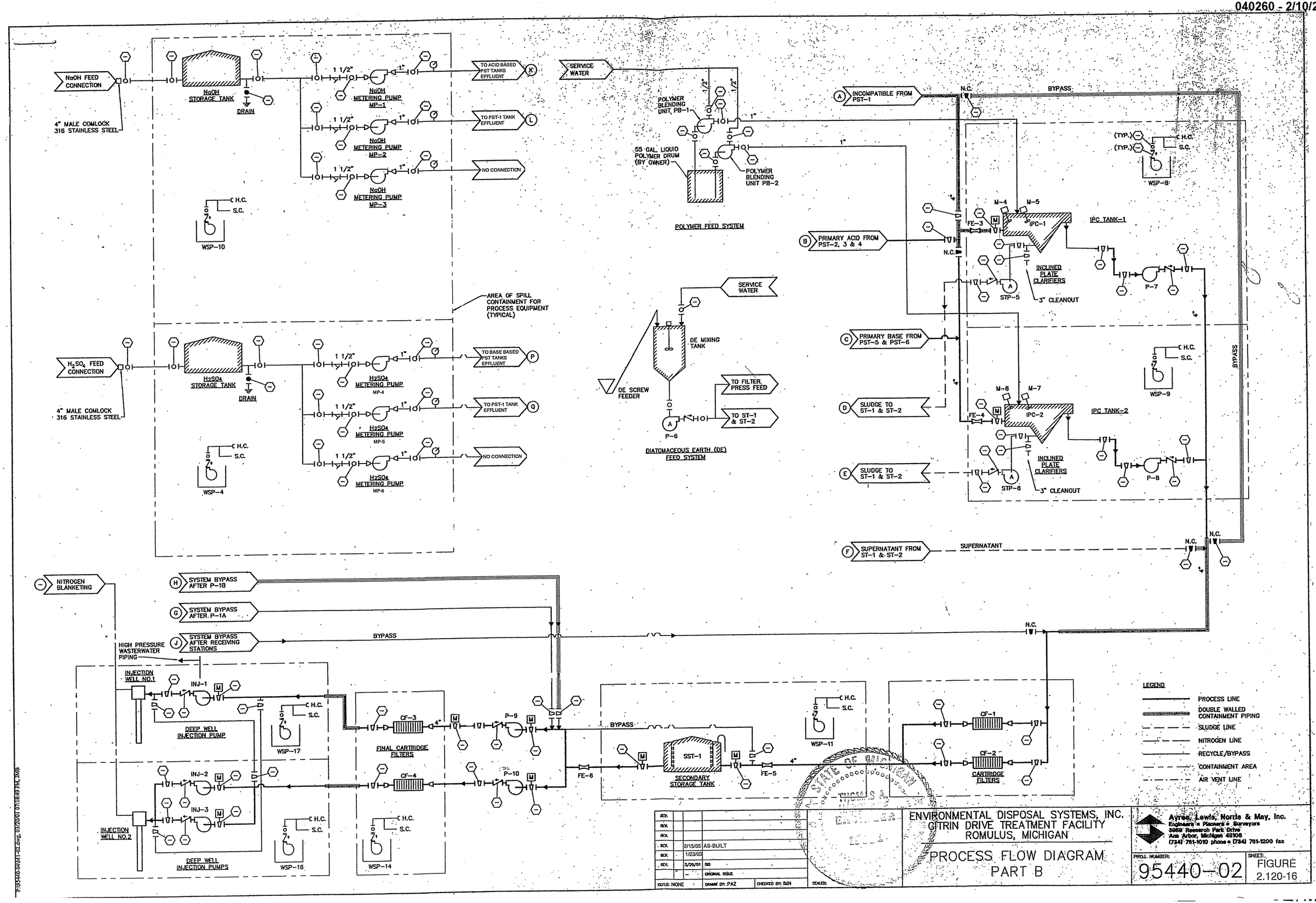
NaOH FEED CONNECTION
4" MALE COMLOCK 316 STAINLESS STEEL
NaOH STORAGE TANK
DRAIN
1 1/2"
NaOH METERING PUMP MP-1
NaOH METERING PUMP MP-2
NaOH METERING PUMP MP-3
TO ACID BASED PST TANKS EFFLUENT
TO PST-1 TANK EFFLUENT
NO CONNECTION
H.C.
S.C.
WSP-10
AREA OF SPILL CONTAINMENT FOR PROCESS EQUIPMENT (TYPICAL)
H2SO4 FEED CONNECTION
H2SO4 STORAGE TANK
H2SO4 METERING PUMP MP-4
H2SO4 METERING PUMP MP-5
H2SO4 METERING PUMP MP-6
TO BASE BASED PST TANKS EFFLUENT
WSP-4
SERVICE WATER
POLYMER BLENDING UNIT, PB-1
55 GAL. LIQUID POLYMER DRUM (BY OWNER)
POLYMER BLENDING UNIT PB-2
POLYMER FEED SYSTEM
DE MIXING TANK
DE SCREW FEEDER
TO FILTER PRESS FEED
TO ST-1 & ST-2
P-6
DIATOMACEOUS EARTH (DE) FEED SYSTEM
INCOMPATIBLE FROM PST-1
BYPASS
N.C.
PRIMARY ACID FROM PST-2, 3 & 4
PRIMARY BASE FROM PST-5 & PST-6
SLUDGE TO ST-1 & ST-2
SUPERNATANT FROM ST-1 & ST-2
SUPERNATANT
IPC-1
IPC TANK-1
IPC-2
IPC TANK-2
INCLINED PLATE CLARIFIERS
3" CLEANOUT
STP-5
STP-6
P-7
P-8
WSP-8
WSP-9
FE-3
FE-4
M-4
M-5
M-6
M-7
NITROGEN BLANKETING
SYSTEM BYPASS AFTER P-1B
SYSTEM BYPASS AFTER. P-1A
SYSTEM BYPASS AFTER RECEIVING STATIONS
HIGH PRESSURE WASTERWATER PIPING
INJECTION WELL NO.1
INJECTION WELL NO.2
INJ-1
INJ-2
INJ-3
DEEP WELL INJECTION PUMP
DEEP WELL INJECTION PUMPS
WSP-17
WSP-16
CF-3
CF-4
FINAL CARTRIDGE FILTERS
WSP-14
P-9
P-10
FE-6
SST-1
SECONDARY STORAGE TANK
FE-5
WSP-11
CF-1
CF-2
CARTRIDGE FILTERS
LEGEND
PROCESS LINE
DOUBLE WALLED CONTAINMENT PIPING
SLUDGE LINE
NITROGEN LINE
RECYCLE/BYPASS
CONTAINMENT AREA
AIR VENT LINE
REV. 2/15/05 AS-BUILT
REV. 1/23/03
REV. 3/20/01 DID
ORIGINAL ISSUE
SCALE: NONE
DRAWN BY: PAZ
CHECKED BY: BJN
ENVIRONMENTAL DISPOSAL SYSTEMS, INC.
CITRIN DRIVE TREATMENT FACILITY
ROMULUS, MICHIGAN
PROCESS FLOW DIAGRAM
PART B
Ayres, Lewis, Norris & May, Inc.
Engineers • Planners • Surveyors
3950 Research Park Drive
Ann Arbor, Michigan 48108
(734) 761-1010 phone • (734) 761-1200 fax
PROJ. NUMBER: 95440-02
SHEET: FIGURE 2.120-16

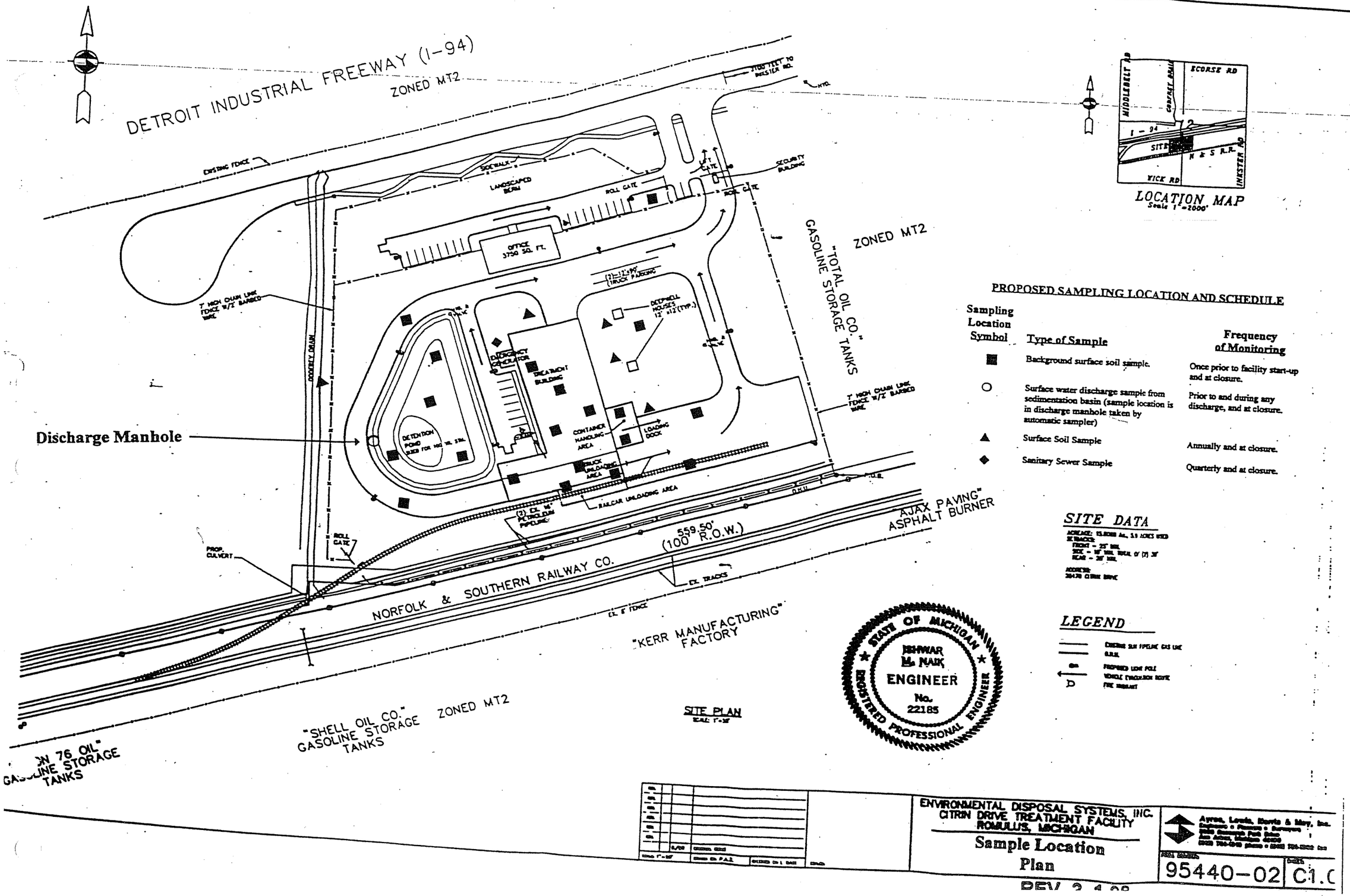

Figure 2.120-17

V:\PROJ\95440-02\C1-00 Thu Jul 03 00:36:09 1997 paz

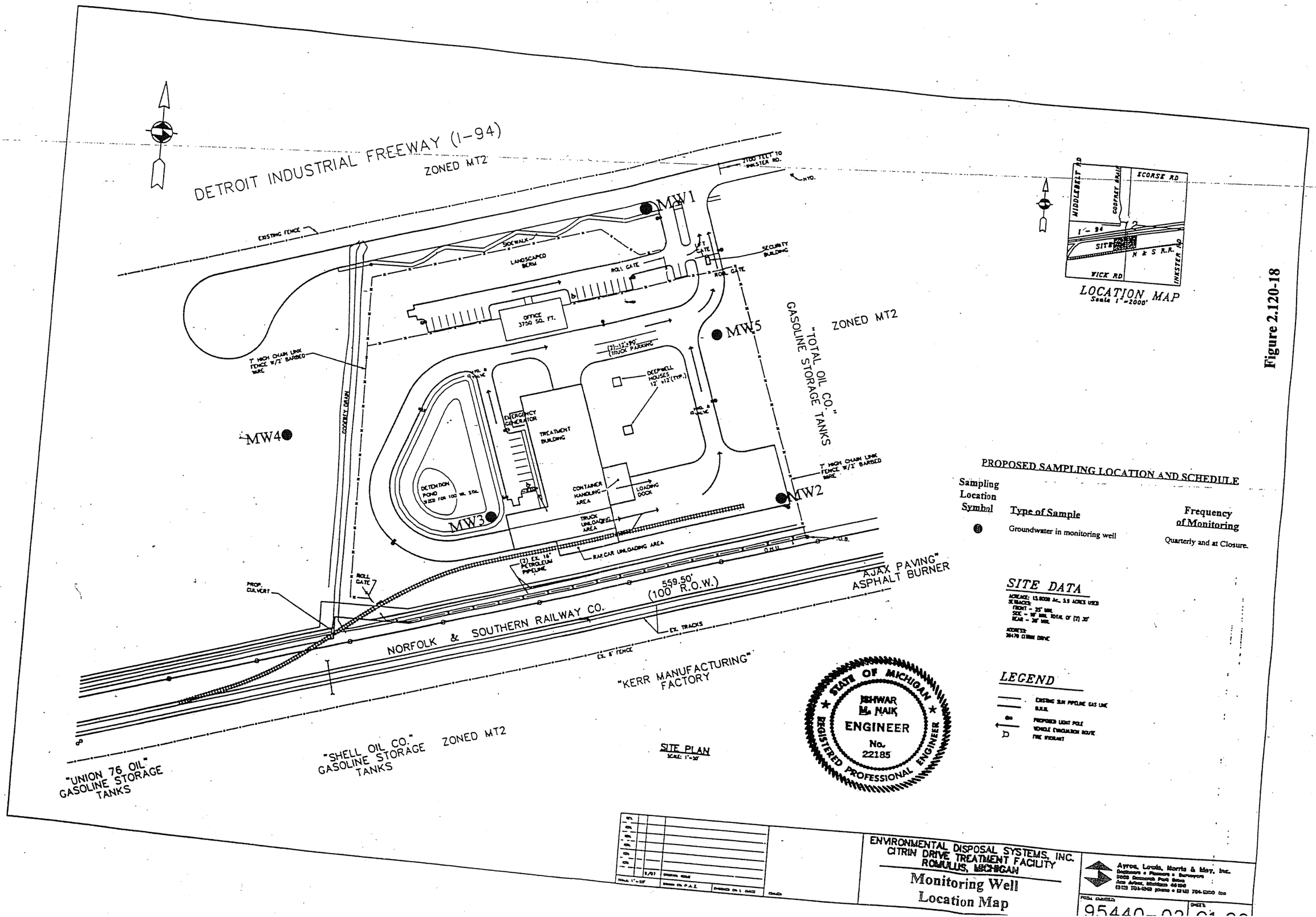

Figure 2.120-18

P:\PROJ\ 02\C1-00 Thu Jul 03 00:36:09 1997 paz

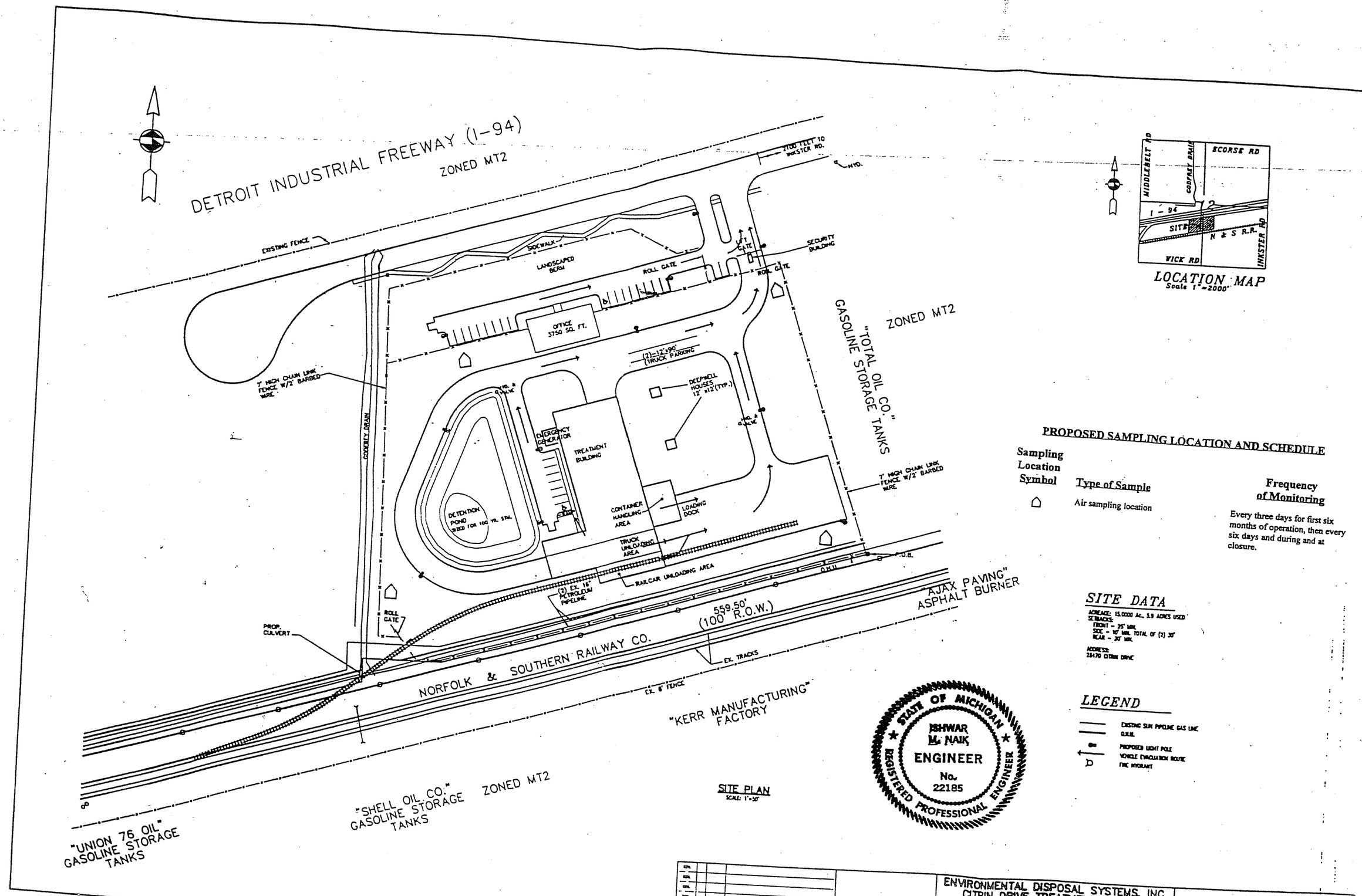

Figure 2.120-19

APPENDIX 2.120-1

CLEANUP CRITERIA

ATTACHMENT A
GROUNDWATER: RESIDENTIAL AND INDUSTRIAL-COMMERCIAL
PART 201 GENERIC CLEANUP CRITERIA AND SCREENING LEVELS

Developed under the authority of the

NATURAL RESOURCES AND ENVIRONMENTAL PROTECTION ACT, 1994 PA 451, AS AMENDED

Groundwater criteria were calculated using currently available toxicological and chemical-specific data. These criteria may change as new data become available. They are not necessarily final cleanup standards. Current criteria are available on the ERD Homepage at www.deq.state.mi.us/erd. Scientific notation is represented by E+ or E- a value, for example 2×10^6 is reported as 2.0E+6. Please refer to Operational Memorandum #6 for analytical methods and method detection limits. All values are expressed in units of parts per billion (ug/L). Changes made since the last revision of thetables (January 1999) are shaded.

Chemical	Chemical Abstract Service Number	#1 Residential & Commercial I Drinking Water Criteria	#2 Industrial & Commercial II, III & IV Drinking Water Criteria	#3 Groundwater Surface Water Interface Criteria	#4 Residential & Commercial I Groundwater Volatilization to Indoor Air Inhalation Criteria	#5 Industrial & Commercial II, III & IV Groundwater Volatilization to Indoor Air Inhalation Criteria	#6 Groundwater Contact Criteria (AA)	#7 Water Solubility	#8 Flammability and Explosivity Screening Level	#9 Acute Inhalation Screening Level
Acenaphthene	83329	1,300	3,800	19	4,200 (S)	4,200 (S)	4,200 (S)	4,240	ID	ID
Acenaphthylene	208968	26	75	ID	3,900 (S)	3,900 (S)	3,900 (S)	3,930	ID	ID
Acetaldehyde (I)	75070	950	2,700	NA	1.1E+6	2.3E+6	4.2E+7	1.0E+9	4.4E+6	2.6E+7
Acetic acid (I)	64197	18,000 (M)	18,000 (M)	18,000 (M)	NLV	NLV	1.8E+8	6.0E+9	4.8E+6	1.0E+9 (D)
Acetone (I)	67641	730	2,100	1,700	1.0E+9 (D)	1.0E+9 (D)	3.1E+7	1.0E+9	7.5E+6	1.0E+9 (D)
Acetonitrile (I)	75058	140	400	NA	1.4E+8	2.0E+8 (S)	5.7E+6	2.00E+8	1.0E+7	2.0E+8 (S)
Acrolein (I)	107028	120	330	NA	2,100	4,200	3.4E+6	2.10E+8	3.3E+6	3.4E+5
Acrylamide	79061	0.5 (M)	0.78	NA	NLV	NLV	8,700	2.20E+9	ID	ID
Acrylic acid (I)	79107	3,900	11,000	NA	1.2E+7	2.8E+7	7.4E+7	1.0E+9	1.0E+9 (D)	ID
Acrylonitrile (I)	107131	1.6	6.4	4.9 (X)	34,000	1.9E+5	8,100	7.50E+7	3.2E+6	ID
Alachlor	15972608	2.0 (A)	2.0 (A)	11 (X)	NLV	NLV	ID	1.83E+5	ID	ID
Aldicarb	116063	3.0 (A)	3.0 (A)	NA	NLV	NLV	1.2E+5	6.00E+6	ID	ID
Aldicarb sulfoxide	1646873	4.0 (A)	4.0 (A)	NA	NLV	NLV	3.2E+6	2.80E+7	ID	ID
Aldicarb sulfone	1646884	2.0 (A)	2.0 (A)	NA	NLV	NLV	2.6E+6	7.80E+6	ID	ID
Aldrin	309002	0.05	0.2	NA	180 (S)	180 (S)	0.12	180	ID	ID
Aluminum (B)	7429905	50 (V)	50 (V)	NA	NLV	NLV	7.0E+7	NA	ID	ID
Ammonia	7664417	ID (N)	ID (N)	(AC)	3.2E+6	7.2E+6	ID	5.30E+8	ID	3.5E+6
Aniline (I)	62533	150	610	IP	NLV	NLV	3.7E+5	3.60E+7	ID	ID
Anthracene	120127	43 (S)	43 (S)	ID	43 (S)	43 (S)	43 (S)	43.4	ID	ID
Antimony (B)	7440360	6.0 (A)	6.0 (A)	ID	NLV	NLV	75,000	NA	ID	ID
Arsenic (B)	7440382	50 (A)	50 (A)	150 (X)	NLV	NLV	4,700	NA	ID	ID
Asbestos (AB)	1332214	7.0E+6 f/mL	7.0E+6 f/mL	NA	NLV	NLV	ID	NA	ID	ID

REV. 1
8/99

040265 - 2/10/2006

ATTACHMENT A
GROUNDWATER: RESIDENTIAL AND INDUSTRIAL-COMMERCIAL
PART 201 GENERIC CLEANUP CRITERIA AND SCREENING LEVELS

Chemical	Chemical Abstract Service Number	#1 Residential & Commercial I Drinking Water Criteria	#2 Industrial & Commercial II, III & IV Drinking Water Criteria	#3 Groundwater Surface Water Interface Criteria	#4 Residential & Commercial I Groundwater Volatilization to Indoor Air Inhalation Criteria	#5 Industrial & Commercial II, III & IV Groundwater Volatilization to Indoor Air Inhalation Criteria	#6 Groundwater Contact Criteria (AA)	#7 Water Solubility	#8 Flammability and Explosivity Screening Level	#9 Acute Inhalation Screening Level
Atrazine	1912249	3.0 (A)	3.0 (A)	7.3 (X)	NLV	NLV	1,600	70,000	ID	ID
Azobenzene	103333	7.7	32	NA	6,400 (S)	6,400 (S)	410	6,400	ID	ID
Barium (B)	7440393	2,000 (A)	2,000 (A)	190	NLV	NLV	1.5E+7	NA	ID	ID
Benzene (I)	71432	5.0 (A)	5.0 (A)	200 (X)	5,600	36,000	9,400	1.75E+6	34,000	67,000
Benzidine	92875	0.3 (M)	0.3 (M)	ID	NLV	NLV	6.8	5.20E+5	ID	ID
Benzo(a)anthracene (Q)	56553	5.0 (M)	5.0 (M)	NA	NLV	NLV	5.0 (M)	9.4	ID	ID
Benzo(b)fluoranthene (Q)	205992	5.0 (M)	5.0 (M)	ID	ID	ID	5.0 (M)	1.5	ID	ID
Benzo(k)fluoranthene (Q)	207089	12	48	NA	NLV	NLV	21	0.8	ID	ID
Benzo(g,h,i)perylene	191242	26	75	NA	NLV	NLV	5.0 (M)	0.26	ID	ID
Benzo(a)pyrene (Q)	50328	5.0 (M)	5.0 (M)	ID	NLV	NLV	5.0 (M)	1.62	ID	ID
Benzoic acid	65850	32,000	92,000	NA	NLV	NLV	3.5E+6 (S)	3.50E+6	ID	ID
Benzyl alcohol	100516	10,000	29,000	NA	NLV	NLV	4.4E+7 (S)	4.40E+7	ID	ID
Benzyl chloride	100447	5.0	20	NA	12,000	77,000	2,000	4.90E+5	ID	ID
Beryllium (B)	7440417	4.0 (A)	4.0 (A)	(G)	NLV	NLV	1.1E+6	NA	ID	ID
bis(2-chloroethoxy)ethane	112265	ID	ID	NA	NLV	NLV	ID	1.89E+7	ID	ID
bis(2-Chloroethyl)ether (I)	111444	5.0 (M)	5.0 (M)	NA	38,000	2.1E+5	2,100	1.72E+7	1.7E+7 (S)	1.7E+7 (S)
bis(2-Ethylhexyl)phthalate	117817	6.0 (A)	6.0 (A)	32	NLV	NLV	47	340	ID	340 (S)
Boron (B)	7440428	500 (F)	500 (F)	1,900	NLV	NLV	6.8E+7	NA	ID	ID
Bromobenzene (I)	108861	18	50	NA	1.8E+5	3.9E+5	9,900	4.13E+5	ID	ID
Bromodichloromethane	75274	100 (A,W)	100 (A,W)	ID	4,800	38,000	11,000	6.74E+6	ID	ID
Bromoform	75252	100 (A,W)	100 (A,W)	ID	4.8E+5	3.1E+6 (S)	1.0E+5	3.10E+6	ID	ID
Bromomethane	74839	10	29	35	4,000	9,000	65,000	1.45E+7	ID	ID
n-Butanol (I)	71363	950	2,700	NA	NLV	NLV	8.2E+6	7.40E+7	2.4E+7	7.4E+7 (S)
2-Butanone (MEK) (I)	78933	13,000	38,000	2,200	2.4E+8 (S)	2.4E+8 (S)	2.4E+8 (S)	2.40E+8	ID	2.4E+8 (S)
n-Butyl acetate (I)	123864	550	1,600	NA	6.7E+6 (S)	6.7E+6 (S)	1.6E+6	6.70E+6	1.2E+6	6.7E+6 (S)
t-Butyl alcohol (I)	75650	3,900	11,000	NA	1.0E+9 (D)	1.0E+9 (D)	7.7E+7	1.0E+9	3.0E+7	ID
Butyl benzyl phthalate	85687	1,200	2,700 (S)	14 (X)	NLV	NLV	2,700 (S)	2,690	ID	ID
n-Butylbenzene	104518	80	230	NA	ID	ID	ID	NA	ID	ID
sec-Butylbenzene	135988	80	230	NA	ID	ID	ID	NA	ID	ID
tert-Butylbenzene (I)	98066	80	230	NA	ID	ID	ID	NA	ID	ID
Cadmium (B)	7440439	5.0 (A)	5.0 (A)	(G,X)	NLV	NLV	2.1E+5	NA	ID	ID
Camphene (I)	79925	ID	ID	NA	ID	ID	ID	33,400	ID	ID

REV. 1
8/99

040266 - 2/10/2006

ATTACHMENT A
GROUNDWATER: RESIDENTIAL AND INDUSTRIAL-COMMERCIAL
PART 201 GENERIC CLEANUP CRITERIA AND SCREENING LEVELS

Chemical	Chemical Abstract Service Number	#1 Residential & Commercial I Drinking Water Criteria	#2 Industrial & Commercial II, III & IV Drinking Water Criteria	#3 Groundwater Surface Water Interface Criteria	#4 Residential & Commercial I Groundwater Volatilization to Indoor Air Inhalation Criteria	#5 Industrial & Commercial II, III & IV Groundwater Volatilization to Indoor Air Inhalation Criteria	#6 Groundwater Contact Criteria (AA)	#7 Water Solubility	#8 Flammability and Explosivity Screening Level	#9 Acute Inhalation Screening Level
Caprolactam	105602	5,800	17,000	NA	NLV	NLV	4.2E+8	5.25E+9	ID	1.0E+9 (D)
Carbaryl	63252	700	2,000	NA	ID	ID	1.3E+5 (S)	1.26E+5	ID	ID
Carbazole	86748	43	170	10 (M)	NLV	NLV	2,900	7,480	ID	ID
Carbofuran	1563662	40 (A)	40 (A)	NA	NLV	NLV	3.3E+5	7.00E+5	ID	ID
Carbon disulfide (I,R)	75150	800	2,300	ID	2.5E+5	5.5E+5	1.1E+6	1.19E+6	6,500	ID
Carbon tetrachloride	56235	5.0 (A)	5.0 (A)	45 (X)	370	2,400	1,600	7.93E+5	ID	96,000
Chlordane (J)	57749	2.0 (A)	2.0 (A)	IP	56 (S)	56 (S)	11	56	ID	ID
Chloride (B)	16887006	2.5E+5 (E)	2.5E+5 (E)	NA	NLV	NLV	ID	NA	ID	ID
Chlorobenzene (I)	108907	100 (A)	100 (A)	47	2.1E+5	4.7E+5 (S)	68,000	4.72E+5	79,000	ID
Chloroethane (I)	75003	220	910	ID	5.7E+6 (S)	5.7E+6 (S)	2.0E+5	5.74E+6	56,000	ID
2-Chloroethyl vinyl ether	110758	ID	ID	NA	ID	ID	ID	1.50E+7	ID	ID
Chloroform	67663	100 (A,W)	100 (A,W)	170 (X)	28,000	1.8E+5	96,000	7.92E+6	ID	ID
Chloromethane (I)	74873	66	270	ID	8,600	52,000	1.1E+5	6.34E+6	18,000	2.1E+5
4-Chloro-3-methylphenol	59507	150	420	NA	NLV	NLV	62,000	3.90E+6	ID	ID
beta-Chloronaphthalene	91587	1,800	5,200	NA	ID	ID	6,700 (S)	6,740	ID	ID
2-Chlorophenol	95578	45	130	22	ID	ID	82,000	2.20E+7	ID	ID
o-Chlorotoluene (I)	95498	150	420	NA	3.7E+5 (S)	3.7E+5 (S)	35,000	3.73E+5	ID	ID
Chlorpyrifos	2921882	22	63	NA	2.9	6.6	1,100 (S)	1,120	ID	ID
Chromium (III) (B,H)	16065831	100 (A)	100 (A)	(G,X)	NLV	NLV	3.2E+8	NA	ID	ID
Chromium (VI) (B,H)	18540299	100 (A)	100 (A)	11	NLV	NLV	1.0E+6	NA	ID	ID
Chrysene (Q)	218019	120	480	ID	ID	ID	5.0 (M)	1.6	ID	ID
Cobalt (B)	7440484	50 (M)	100	100	NLV	NLV	1.1E+6	NA	ID	ID
Copper (B)	7440508	1,000 (E)	1,000 (E)	(G)	NLV	NLV	8.1E+6	NA	ID	ID
Cyanazine	21725462	10 (M)	10 (M)	56 (X)	NLV	NLV	1,700	1.70E+5	ID	ID
Cyanide (R)	57125	200 (A)	200 (A)	20 (M)	NLV	NLV	6.5E+5	NA	ID	ID
Cyclohexanone (I)	108941	33,000	94,000	NA	1,400	3,300	2.3E+7 (S)	2.30E+7	ID	ID
Dacthal	1861321	73	210	NA	NLV	NLV	500 (S)	500	ID	ID
Dalapon	75990	200 (A)	200 (A)	NA	NLV	NLV	1.2E+7	5.02E+8	ID	ID
4-4'-DDD	72548	3.5	14	NA	NLV	NLV	12	90	ID	ID
4-4'-DDE	72559	2.5	10	NA	ID	ID	11	120	ID	ID
4-4'-DDT	50293	2.5	10	0.02 (M)	NLV	NLV	5.3	25	ID	ID
Decabromodiphenyl ether	1163195	30 (S)	30 (S)	NA	30 (S)	30 (S)	30 (S)	30	ID	ID

REV. 1
8/99

040267 - 2/10/2006

ATTACHMENT A
GROUNDWATER: RESIDENTIAL AND INDUSTRIAL-COMMERCIAL
PART 201 GENERIC CLEANUP CRITERIA AND SCREENING LEVELS

		#1	#2	#3	#4	#5	#6	#7	#8	#9
Chemical	Chemical Abstract Service Number	Residential & Commercial I Drinking Water Criteria	Industrial & Commercial II, III & IV Drinking Water Criteria	Groundwater Surface Water Interface Criteria	Residential & Commercial I Groundwater Volatilization to Indoor Air Inhalation Criteria	Industrial & Commercial II, III & IV Groundwater Volatilization to Indoor Air Inhalation Criteria	Groundwater Contact Criteria (AA)	Water Solubility	Flammability and Explosivity Screening Level	Acute Inhalation Screening Level
Di-n-butyl phthalate	84742	880	2,500	9.7	NLV	NLV	11,000 (S)	11,200	ID	ID
Di(2-ethylhexyl) adipate	103231	400 (A)	400 (A)	NA	NLV	NLV	470 (S)	471	ID	ID
Di-n-octyl phthalate	117840	130	380	ID	NLV	NLV	250	3,000	ID	ID
Diacetone alcohol (I)	123422	ID	ID	NA	NLV	NLV	ID	1.0E+9	1.0E+9 (D)	ID
Diazinon	333415	1.3	3.8	NA	NLV	NLV	1,100	68,800	ID	ID
Dibenzo(a,h)anthracene (Q)	53703	5.0 (M)	5.0 (M)	ID	NLV	NLV	5.0 (M)	2.49	ID	ID
Dibenzofuran	132649	ID	ID	4.0	ID	ID	ID	10,000	ID	ID
Dibromochloromethane	124481	100 (A,W)	100 (A,W)	ID	15,000	1.1E+5	9,500	2.60E+6	ID	ID
Dibromochloropropane	96128	0.2 (A)	0.2 (A)	NA	1,200 (S)	1,200 (S)	300	NA	ID	ID
Dibromomethane	74953	80	230	NA	ID	ID	5.1E+5	1.10E+7	ID	ID
1,2-Dichlorobenzene	95501	600 (A)	600 (A)	16	1.6E+5 (S)	1.6E+5 (S)	1.6E+5 (S)	1.56E+5	ID	1.6 E+5 (S)
1,3-Dichlorobenzene	541731	600	600	38	ID	ID	1.1E+5 (S)	1.11E+5	ID	ID
1,4-Dichlorobenzene	106467	75 (A)	75 (A)	13	16,000	74,000 (S)	2,800	73,800	ID	ID
3,3'-Dichlorobenzidine	91941	1.9	7.7	0.3 (M,X)	NLV	NLV	270	3,110	ID	ID
Dichlorodifluoromethane	75718	1,700	4,800	ID	2.2E+5	3.0E+5 (S)	3.0E+5 (S)	3.00E+5	ID	ID
1,1-Dichloroethane (I)	75343	880	2,500	ID	5.1E+6 (S)	5.1E+6 (S)	2.1E+6	5.06E+6	1.9E+5	ID
1,2-Dichloroethane (I)	107062	5.0 (A)	5.0 (A)	360 (X)	9,600	59,000	11,000	8.52E+6	1.3E+6	ID
1,1-Dichloroethylene (I)	75354	7.0 (A)	7.0 (A)	65 (X)	200	1,300	9,000	2.25E+6	48,000	1.4E+5
cis-1,2-Dichloroethylene (I)	156592	70 (A)	70 (A)	ID	3.5E+6 (S)	3.5E+6 (S)	1.7E+5	3.50E+6	2.7E+5	ID
trans-1,2-Dichloroethylene	156605	100 (A)	100 (A)	ID	6.3E+6 (S)	6.3E+6 (S)	1.9E+5	6.30E+6	1.2E+5	ID
2,6-Dichloro-4-nitroaniline	99309	2,200	6,300	NA	NLV	NLV	7,000 (S)	7,000	ID	ID
2,4-Dichlorophenol	120832	73	210	19	NLV	NLV	-40,000	4.50E+6	ID	ID
2,4-Dichlorophenoxyacetic acid	94757	70 (A)	70 (A)	220	NLV	NLV	1.1E+5	6.80E+5	ID	ID
1,2-Dichloropropane (I)	78875	5.0 (A)	5.0 (A)	290 (X)	16,000	36,000	7,500	2.80E+6	2.7E+5	2.8E+6 (S)
1,3-Dichloropropene (I,J)	542756	4.7	19	NA	300	2,000	2,600	2.80E+6	66,000	ID
Dichlorovos	62737	2.9	12	NA	NLV	NLV	11,000	1.60E+7	ID	ID

REV. 1
8/99

040268 - 2/10/2006

ATTACHMENT A
GROUNDWATER: RESIDENTIAL AND INDUSTRIAL-COMMERCIAL
PART 201 GENERIC CLEANUP CRITERIA AND SCREENING LEVELS

Chemical	Chemical Abstract Service Number	#1 Residential & Commercial I Drinking Water Criteria	#2 Industrial & Commercial II, III & IV Drinking Water Criteria	#3 Groundwater Surface Water Interface Criteria	#4 Residential & Commercial I Groundwater Volatilization to Indoor Air Inhalation Criteria	#5 Industrial & Commercial II, III & IV Groundwater Volatilization to Indoor Air Inhalation Criteria	#6 Groundwater Contact Criteria (AA)	#7 Water Solubility	#8 Flammability and Explosivity Screening Level	#9 Acute Inhalation Screening Level
Dicyclohexyl phthalate	84617	ID	ID	NA	ID	ID	ID	4,000	ID	ID
Dieldrin	60571	0.053	0.22	0.02 (M)	200 (S)	200 (S)	0.9	195	ID	ID
Diethyl ether (I)	60297	10 (E,M)	10 (E,M)	ID	6.1E+7 (S)	6.1E+7 (S)	3.3E+7	6.10E+7	3.2E+5	6.1E+7 (S)
Diethyl phthalate	84662	5,500	16,000	NA	NLV	NLV	1.1E+6 (S)	1.08E+6	ID	ID
Diethylene glycol monobutyl ether	112345	88	250	NA	NLV	NLV	4.3E+6	1.0E+9	ID	ID
Diisopropylamine (I)	108189	5.6	16	NA	ID	ID	19,000	3.69E+7	2.3E+6	ID
Dimethyl phthalate	131113	73,000	2.1E+5	NA	NLV	NLV	4.2E+6 (S)	4.19E+6	ID	ID
N,N-Dimethylacetamide	127195	180	520	4,100 (X)	NLV	NLV	2.6E+7	1.0E+9	ID	ID
N,N-Dimethylaniline	121697	16	46	NA	2.4E+5	1.3E+6 (S)	16,000	1.27E+6	ID	1.3E+6 (S)
Dimethylformamide (I)	68122	700	2,000	NA	NLV	NLV	1.3E+8	1.0E+9	ID	ID
2,4-Dimethylphenol	105679	370	1,000	12	NLV	NLV	4.4E+5	7.87E+6	ID	ID
2,6-Dimethylphenol	576261	5.0 (M)	13	NA	NLV	NLV	5,300	6.14E+6	ID	ID
3,4-Dimethylphenol	95658	10	29	NA	NLV	NLV	15,000	4.93E+6	ID	ID
Dimethylsulfoxide	67685	2.2E+5	6.3E+5	1.9E+5	NLV	NLV	1.7E+8 (S)	1.66E+8	ID	ID
2,4-Dinitrotoluene	121142	5.0 (M)	5.1	NA	NLV	NLV	1,300	2.70E+5	ID	ID
Dinoseb	88857	7.0 (A)	7.0 (A)	NA	ID	ID	6,100	52,000	ID	ID
1,4-Dioxane (I)	123911	77	320	2,800 (X)	NLV	NLV	1.7E+6	9.00E+8	7.2E+7	ID
Diquat	85007	20 (A)	20 (A)	NA	NLV	NLV	7.0E+5 (S)	7.00E+5	ID	ID
Diuron	330541	31	90	NA	NLV	NLV	37,000 (S)	37,300	ID	ID
Endosulfan (J)	115297	1.7	4.8	NA	ID	ID	510 (S)	510	ID	ID
Endothall	145733	100 (A)	100 (A)	NA	NLV	NLV	3.0E+7	1.00E+8	ID	ID
Endrin	72208	2.0 (A)	2.0 (A)	IP	NLV	NLV	120	250	ID	ID
Epichlorohydrin (I)	106898	86	350	NA	3.2E+5	6.3E+5	6.8E+5	6.60E+7	2.3E+7	ID
Ethanol (I)	64175	1.9E+6	3.8E+6	IP	NLV	NLV	1.0E+9 (D)	1.0E+9	4.8E+7	ID
Ethyl acetate (I)	141786	6,600	19,000	NA	6.4E+7 (S)	6.4E+7 (S)	6.4E+7(S)	6.40E+7	2.1E+6	ID
Ethylbenzene (I)	100414	74 (E)	74 (E)	18	1.7E+5 (S)	1.7E+5 (S)	1.7E+5 (S)	1.69E+5	22,000	1.7E+5 (S)
Ethylene dibromide	106934	0.05 (A)	0.05 (A)	NA	2,400	15,000	16	4.20E+6	ID	ID
Ethylene glycol	107211	15,000	42,000	NA	NLV	NLV	1.0E+9 (S)	1.0E+9	ID	1.0E+9 (D)
Ethylene glycol monobutyl ether	111762	200	560	NA	53,000	1.2E+5	2.8E+6	2.24E+8	ID	ID
Fluoranthene	206440	210 (S)	210 (S)	1.6	210 (S)	210 (S)	210 (S)	206	ID	ID
Fluorene	86737	880	2,000 (S)	12	2,000 (S)	2,000 (S)	2,000 (S)	1,980	ID	ID
Fluorine (soluble fluoride) (B)	7782414	2,000 (A,E)	2,000 (A,E)	NA	NLV	NLV	1.3E+7	NA	ID	ID

REV. 1
8/99

040269 - 2/10/2006

ATTACHMENT A
GROUNDWATER: RESIDENTIAL AND INDUSTRIAL-COMMERCIAL
PART 201 GENERIC CLEANUP CRITERIA AND SCREENING LEVELS

Chemical	Chemical Abstract Service Number	#1 Residential & Commercial I Drinking Water Criteria	#2 Industrial & Commercial II, III & IV Drinking Water Criteria	#3 Groundwater Surface Water Interface Criteria	#4 Residential & Commercial I Groundwater Volatilization to Indoor Air Inhalation Criteria	#5 Industrial & Commercial II, III & IV Groundwater Volatilization to Indoor Air Inhalation Criteria	#6 Groundwater Contact Criteria (AA)	#7 Water Solubility	#8 Flammability and Explosivity Screening Level	#9 Acute Inhalation Screening Level
Formaldehyde	50000	1,300	3,800	120	63,000	3.6E+5	2.9E+7	5.50E+8	ID	61,000
Formic acid (I,U)	64186	18,000 (M)	29,000	ID	7.7E+6	1.5E+7	6.2E+8	1.0E+9	6.6E+8	3.5E+8
1-Formylpiperidine	2591868	80	230	NA	ID	ID	ID	NA	ID	ID
Gentian violet	548629	8.5	35	NA	NLV	NLV	4.9E+5	1.00E+6	ID	ID
Glyphosate	1071836	700 (A)	700 (A)	NA	NLV	NLV	ID	1.16E+7	ID	ID
Heptachlor	76448	0.4 (A)	0.4 (A)	NA	180 (S)	180 (S)	0.71	180	ID	ID
Heptachlor epoxide	1024573	0.2 (A)	0.2 (A)	NA	NLV	NLV	3.1	200	ID	ID
n-Heptane (I)	142825	32,000	92,000	NA	2,700 (S)	2,700 (S)	2,700 (S)	2,690	100	2,700 (S)
Hexabromobenzene	87821	10 (M)	10 (M)	ID	ID	ID	10 (M)	0.17	ID	ID
Hexachlorobenzene (C-66)	118741	1.0 (A)	1.0 (A)	ID	440	3,000	2.0	6,200	ID	ID
Hexachlorobutadiene (C-46)	87683	11	45	ID	1,600	3,200 (S)	200	3,230	ID	ID
alpha-Hexachlorocyclohexane	319846	0.14	0.55	NA	2,000 (S)	2,000 (S)	16	2,000	ID	ID
beta-Hexachlorocyclohexane	319857	0.47	1.9	NA	NLV	NLV	54	240	ID	ID
Hexachlorocyclopentadiene (C-56)	77474	50 (A)	50 (A)	ID	ID	ID	1,400	1,800	ID	ID
Hexachloroethane	67721	61	250	6.7 (X)	27,000	50,000 (S)	1,500	50,000	ID	ID
n-Hexane (I)	110543	3,000	8,600	NA	12,000 (S)	12,000 (S)	12,000 (S)	12,000	12,000 (S)	ID
2-Hexanone (I)	591786	1,000	2,900	NA	4.2E+6	8.8E+6	4.8E+6	1.60E+7	ID	ID
Indeno(1,2,3-cd)pyrene (Q)	193395	5.0 (M)	5.0 (M)	ID	NLV	NLV	5.0 (M)	0.022	ID	ID
Iron (B)	7439896	300 (E)	300 (E)	NA	NLV	NLV	ID	NA	ID	ID
Isobutyl alcohol (I)	78831	2,300	6,700	NA	7.6E+7 (S)	7.6E+7 (S)	2.4E+7	7.60E+7	ID	ID
Isophorone	78591	900	3,700	570 (X)	NLV	NLV	1.1E+6	1.20E+7	ID	1.2E+7 (S)
Isopropyl alcohol (I)	67630	470	1,300	NA	NLV	NLV	1.3E+7	1.0E+9	3.0E+7	1.0E+9 (D)
Isopropyl benzene (I)	98828	800	2,300	ID	56,000 (S)	56,000 (S)	56,000 (S)	56,000	15,000	ID
Lead (B)	7439921	4.0 (L)	4.0 (L)	(G,X)	NLV	NLV	ID	NA	ID	ID
Lindane	58899	0.2 (A)	0.2 (A)	0.027	ID	ID	86	6,800	ID	ID
Lithium (B)	7439932	170	350	25	NLV	NLV	6.0E+6	NA	ID	ID
Magnesium (B)	7439954	4.2E+5	1.2E+6	NA	NLV	NLV	1.0E+9 (D)	NA	ID	ID

040270 - 2/10/2006

ATTACHMENT A
GROUNDWATER: RESIDENTIAL AND INDUSTRIAL-COMMERCIAL
PART 201 GENERIC CLEANUP CRITERIA AND SCREENING LEVELS

		#1	#2	#3	#4	#5	#6	#7	#8	#9
Chemical	Chemical Abstract Service Number	Residential & Commercial I Drinking Water Criteria	Industrial & Commercial II, III & IV Drinking Water Criteria	Groundwater Surface Water Interface Criteria	Residential & Commercial I Groundwater Volatilization to Indoor Air Inhalation Criteria	Industrial & Commercial II, III & IV Groundwater Volatilization to Indoor Air Inhalation Criteria	Groundwater Contact Criteria (AA)	Water Solubility	Flammability and Explosivity Screening Level	Acute Inhalation Screening Level
Manganese (B)	7439965	50 (E)	50 (E)	(G,X)	NLV	NLV	1.0E+7	NA	ID	ID
Mercury (Inorganic) (B)	7439976	2.0 (A)	2.0 (A)	0.2 (M)	NLV	NLV	56 (S)	56	ID	ID
Methane	74828	ID	ID	ID	(K)	(K)	ID	NA	(K)	ID
Methanol (I)	67561	3,700	10,000	ID	2.5E+6	6.0E+6	2.9E+7 (S)	2.90E+7	2.3E+6	2.9E+7 (S)
Methoxychlor	72435	40 (A)	40 (A)	NA	ID	ID	45 (S)	45	ID	ID
2-Methoxyethanol (I)	109864	7.3	20	NA	NLV	NLV	9.1E+5	1.0E+9	ID	ID
2-Methyl-4-chlorophenoxyacetic acid	94746	7.3	21	NA	NLV	NLV	8,200	9.24E+5	ID	ID
2-Methyl-4,6-dinitrophenol	534521	20 (M)	20 (M)	NA	NLV	NLV	8,800	2.00E+5	ID	ID
Methyl parathion	298000	1.8	5.2	NA	NLV	NLV	2,700	50,000	ID	ID
4-Methyl-2-pentanone (MIBK) (I)	108101	1,800	5,200	ID	2.0E+7 (S)	2.0E+7 (S)	1.2E+7	2.00E+7	ID	2.0E+7 (S)
Methyl-tert-butyl ether (MTBE)	1634044	40 (E)	40 (E)	730 (X)	4.7E+7 (S)	4.7E+7 (S)	6.5E+5	4.68E+7	ID	ID
N-Methyl-morpholine (I)	109024	20	56	NA	NLV	NLV	1.6E+6	1.0E+9	ID	ID
Methylcyclopentane (I)	96377	ID	ID	NA	ID	ID	ID	73,890	ID	ID
4,4'-Methylene-bis-2-chloroaniline (MBOCA)	101144	0.88	3.6	NA	NLV	NLV	71	14,000	ID	ID
Methylene chloride	75092	5.0 (A)	5.0 (A)	940 (X)	2.2E+5	1.4E+6	1.1E+5	1.70E+7	ID	ID
2-Methylnaphthalene	91576	260	750	ID	ID	ID	32,000	24,600	ID	ID
2-Methylphenol	95487	370	1,000	82	NLV	NLV	7.1E+5	2.80E+7	ID	ID
3-Methylphenol	108394	370	1,000	NA	NLV	NLV	7.3E+5	2.30E+7	ID	ID
4-Methylphenol	106445	37	100	ID	NLV	NLV	75,000	2.30E+7	ID	ID
Metolachlor	51218452	160	670	NA	NLV	NLV	55,000	5.30E+5	ID	ID
Molybdenum (B)	7439987	37	100	800 (X)	NLV	NLV	1.1E+6	NA	ID	ID
Naphthalene	91203	260	750	13	31,000 (S)	31,000 (S)	31,000 (S)	31,000	31,000 (S)	31,000 (S)
Nickel (B)	7440020	100 (A)	100 (A)	(G)	NLV	NLV	1.6E+7	NA	ID	ID
Nitrate (B,N)	14797558	10,000 (A,N)	10,000 (A,N)	NA	NLV	NLV	3.4E+8	NA	ID	ID
Nitrite (B,N)	14797650	1,000 (A,N)	1,000 (A,N)	NA	NLV	NLV	2.1E+7	NA	ID	ID
Nitrobenzene (I)	98953	5.0 (M)	9.6	180 (X)	2.1E+6 (S)	2.1E+6 (S)	9,600	2.09E+6	ID	ID
2-Nitrophenol	88755	20	58	ID	NLV	NLV	72,000	2.50E+6	ID	ID
n-Nitroso-di-n-propylamine	621647	5.0 (M)	5.0 (M)	NA	NLV	NLV	220	9.89E+6	ID	ID
N-Nitrosodiphenylamine	86306	170	710	NA	NLV	NLV	30,000	35,100	ID	ID
Oxamyl	23135220	200 (A)	200 (A)	NA	NLV	NLV	7.4E+7	2.80E+8	ID	ID
Oxo-hexyl acetate	88230357	73	210	NA	ID	ID	ID	NA	ID	ID
Pendimethalin	40487421	280 (S)	280 (S)	NA	NLV	NLV	280 (S)	275	ID	ID

REV. 1
8/99

040271 - 2/10/2006

ATTACHMENT A
GROUNDWATER: RESIDENTIAL AND INDUSTRIAL-COMMERCIAL
PART 201 GENERIC CLEANUP CRITERIA AND SCREENING LEVELS

Chemical	Chemical Abstract Service Number	#1 Residential & Commercial I Drinking Water Criteria	#2 Industrial & Commercial II, III & IV Drinking Water Criteria	#3 Groundwater Surface Water Interface Criteria	#4 Residential & Commercial I Groundwater Volatilization to Indoor Air Inhalation Criteria	#5 Industrial & Commercial II, III & IV Groundwater Volatilization to Indoor Air Inhalation Criteria	#6 Groundwater Contact Criteria (AA)	#7 Water Solubility	#8 Flammability and Explosivity Screening Level	#9 Acute Inhalation Screening Level
Pentachlorobenzene	608935	6.1	17	NA	ID	ID	170	650	ID	ID
Pentachloronitrobenzene	82688	32 (S)	32 (S)	NA	32 (S)	32 (S)	32 (S)	32	ID	ID
Pentachlorophenol	87865	1.0 (A)	1.0 (A)	(G,X)	NLV	NLV	85	1.85E+6	ID	ID
Pentane (I)	109660	ID	ID	NA	38,000 (S)	38,000 (S)	ID	38,200	170	38,000 (S)
2-Pentene (I)	109682	ID	ID	NA	ID	ID	ID	2.03E+5	ID	ID
Phenanthrene	85018	26	75	5.0 (M)	1,000 (S)	1,000 (S)	1,000 (S)	1,000	ID	ID
Phenol	108952	4,400	13,000	210	NLV	NLV	2.8E+7	8.28E+7	ID	ID
Phosphorus (total)	7723140	63,000	2.4E+5	NA	NLV	NLV	ID	NA	ID	ID
Picloram	1918021	500 (A)	500 (A)	NA	NLV	NLV	4.3E+5 (S)	4.30E+5	ID	ID
Piperidine	110894	3.2	9.2	NA	NLV	NLV	32,000	1.0E+9	ID	ID
Polybrominated biphenyls (J)	67324235	0.096	0.39	[illegible] IP	NLV	NLV	ID	1.66E+7	ID	ID
Polychlorinated biphenyls (PCBs) (J,T)	1336363	0.5 (A)	0.5 (A)	0.2 (M)	45 (S)	45 (S)	2.30	44.7	ID	ID
Prometon	1610180	160	460	NA	NLV	NLV	1.6E+5	7.50E+5	ID	ID
Propachlor	1918167	95	270	NA	NLV	NLV	4.2E+5	6.55E+5	ID	ID
Propazine	139402	200	560	NA	NLV	NLV	8,600 (S)	8,600	ID	ID
Propionic acid (I)	79094	18,000 (M)	35,000 (M)	ID	NLV	NLV	2.7E+8	1.0E+9	ID	ID
Propyl alcohol (I)	71238	1,400	4,000	NA	NLV	NLV	2.7E+7	1.0E+9	3.6E+7	1.0E+9 (D)
n-Propylbenzene (I)	103651	80	230	ID	ID	ID	ID	NA	ID	ID
Propylene glycol	57556	1.5E+5	4.2E+5	NA	NLV	NLV	1.0E+9 (D)	1.0E+9	ID	ID
Pyrene	129000	140 (S)	140 (S)	ID	140 (S)	140 (S)	140 (S)	135	ID	ID
Pyridine (I)	110861	7.3	21	NA	5,500	12,000	90,000	3.00E+5	41,000	ID
Selenium (B)	7782492	50 (A)	50 (A)	5.0	NLV	NLV	1.1E+6	NA	ID	ID
Silver (B)	7440224	34	98	0.2 (M)	NLV	NLV	1.0E+6	NA	ID	ID
Silvex (2,4,5-TP)	93721	50 (A)	50 (A)	NA	NLV	NLV	37,000	1.40E+5	ID	ID
Simazine	122349	4.0 (A)	4.0 (A)	NA	NLV	NLV	4,500 (S)	4,470	ID	ID
Sodium (B)	7440235	1.6E+5	4.5E+5	NA	NLV	NLV	1.0E+9 (D)	NA	ID	ID
Strontium (B)	7440246	4,600	13,000	760	NLV	NLV	1.3E+8	NA	ID	ID
Styrene (I)	100425	100 (A)	100 (A)	80	1.6E+5	3.1E+5 (S)	3,200	3.10E+5	68,000	3.1E+5 (S)

REV. 1
8/99

040272 - 2/10/2006

ATTACHMENT A
GROUNDWATER: RESIDENTIAL AND INDUSTRIAL-COMMERCIAL
PART 201 GENERIC CLEANUP CRITERIA AND SCREENING LEVELS

Chemical	Chemical Abstract Service Number	#1 Residential & Commercial I Drinking Water Criteria	#2 Industrial & Commercial II, III & IV Drinking Water Criteria	#3 Groundwater Surface Water Interface Criteria	#4 Residential & Commercial I Groundwater Volatilization to Indoor Air Inhalation Criteria	#5 Industrial & Commercial II, III & IV Groundwater Volatilization to Indoor Air Inhalation Criteria	#6 Groundwater Contact Criteria (AA)	#7 Water Solubility	#8 Flammability and Explosivity Screening Level	#9 Acute Inhalation Screening Level
Sulfate	14808798	2.5E+5 (E)	2.5E+5 (E)	NA	NLV	NLV	ID	NA	ID	ID
Tebuthiuron	34014181	510	1,500	NA	NLV	NLV	2.5E+6 (S)	2.50E+6	ID	ID
2,3,7,8-Tetrabromodibenzo-p-dioxin (O)	50585416	(O)	(O)	NA	NLV	NLV	1.0E-4 (M)	0.00996	ID	ID
1,2,4,5-Tetrachlorobenzene	95943	1,300 (S)	1,300 (S)	IP	ID	ID	1,300 (S)	1,300	ID	ID
2,3,7,8-Tetrachlorodibenzo-p-dioxin (O)	1746016	3.0E-5 (A)	3.0E-5 (A)	1.0E-5 (M)	NLV	NLV	1.0E-5 (M)	0.019	ID	ID
1,1,1,2-Tetrachloroethane	630206	33	130	NA	15,000	96,000	11,000	1.10E+6	ID	ID
1,1,2,2-Tetrachloroethane	79345	4.3	17	78 (X)	12,000	77,000	2,100	2.97E+6	ID	ID
Tetrachloroethylene	127184	5.0 (A)	5.0 (A)	45 (X)	25,000	1.7E+5	5,100	2.0E+5	ID	2.0E+5 (S)
Tetrahydrofuran (I)	109999	240	690	11,000 (X)	6.9E+6	1.6E+7	3.9E+6	1.0E+9	30,000	3.6E+6
Thallium (B)	7440280	2.0 (A)	2.0 (A)	3.7 (X)	NLV	NLV	14,000	NA	ID	ID
Toluene (I)	108883	790 (E)	790 (E)	140	5.3E+5 (S)	5.3E+5 (S)	5.3E+5 (S)	5.26E+5	31,000	ID
p-Toluidine	106490	4.5	18	NA	NLV	NLV	6,500	7.60E+6	ID	ID
Toxaphene	8001352	3.0 (A)	3.0 (A)	1.0 (M)	NLV	NLV	13	740	ID	740 (S)
Triallate	2303175	95	270	NA	ID	ID	4,000 (S)	4,000	ID	ID
Tributylamine	102829	10	29	ID	14,000	75,000 (S)	680	75,400	ID	ID
1,2,4-Trichlorobenzene	120821	70 (A)	70 (A)	30	3.0E+5 (S)	3.0E+5 (S)	15,000	3.00E+5	ID	3.0E+5 (S)
1,1,1-Trichloroethane	71556	200 (A)	200 (A)	200	6.6E+5	1.3E+6 (S)	2.2E+5	1.33E+6	ID	1.3E+6 (S)
1,1,2-Trichloroethane	79005	5.0 (A)	5.0 (A)	330 (X)	17,000	1.1E+5	9,500	4.42E+6	1.8E+6	ID
Trichloroethylene	79016	5.0 (A)	5.0 (A)	200 (X)	15,000	97,000	11,000	1.10E+6	ID	1.1E+6 (S)
Trichlorofluoromethane	75694	2,600	7,300	NA	1.1E+6 (S)	1.1E+6 (S)	1.1E+6 (S)	1.10E+6	ID	1.1E+6 (S)
2,4,5-Trichlorophenol	95954	730	2,100	NA	NLV	NLV	1.3E+5	1.20E+6	ID	ID
2,4,6-Trichlorophenol	88062	77	320	5.0 (M)	NLV	NLV	5,500	8.00E+5	ID	ID
1,2,3-Trichloropropane	96184	42	120	NA	ID	ID	74,000	1.90E+6	ID	ID
1,1,2-Trichloro-1,2,2-trifluoroethane	76131	1.7E+5 (S)	1.7E+5 (S)	NA	1.7E+5 (S)	1.7E+5 (S)	1.7E+5 (S)	1.70E+5	ID	1.7 E+5 (S)
Triethanolamine	102716	3,700	10,000	NA	NLV	NLV	1.0E+9 (D)	1.0E+9	ID	ID
3-Trifluoromethyl-4-nitrophenol	88302	4,500	13,000	NA	NLV	NLV	4.7E+6	5.00E+6	ID	ID
Trifluralin	1582098	110	450	NA	ID	ID	1,500	8,100	ID	ID
2,2,4-Trimethyl pentane	540841	ID	ID	NA	ID	ID	ID	2,330	ID	ID
2,2,4-Trimethyl-2-pentene (I)	107404	ID	ID	NA	ID	ID	ID	11,900	ID	ID
1,2,4-Trimethylbenzene (I)	95636	63 (E)	63 (E)	ID	56,000 (S)	56,000 (S)	1.6E+5	55,890	37,000	ID
1,3,5-Trimethylbenzene (I)	108678	72 (E)	72 (E)	ID	61,000 (S)	61,000 (S)	2.1E+5	61,150	ID	ID
Triphenyl phosphate	115866	1,200	1,400 (S)	NA	NLV	NLV	1,400 (S)	1,430	ID	ID

REV. 1
8/99

040273 - 2/10/2006

ATTACHMENT A
GROUNDWATER: RESIDENTIAL AND INDUSTRIAL-COMMERCIAL
PART 201 GENERIC CLEANUP CRITERIA AND SCREENING LEVELS

		#1	#2	#3	#4	#5	#6	#7	#8	#9
Chemical	Chemical Abstract Service Number	Residential & Commercial I Drinking Water Criteria	Industrial & Commercial II, III & IV Drinking Water Criteria	Groundwater Surface Water Interface Criteria	Residential & Commercial I Groundwater Volatilization to Indoor Air Inhalation Criteria	Industrial & Commercial II, III & IV Groundwater Volatilization to Indoor Air Inhalation Criteria	Groundwater Contact Criteria (AA)	Water Solubility	Flammability and Explosivity Screening Level	Acute Inhalation Screening Level
tris(2,3-Dibromopropyl)phosphate	126727	0.47	1.9	NA	4,700 (S)	4,700 (S)	1,500	4,700	ID	ID
Urea	57136	ID (N)	ID (N)	NA	NLV	NLV	ID	NA	ID	ID
Vanadium (B)	7440622	64	180	12	NLV	NLV	1.9E+6	NA	ID	ID
Vinyl acetate (I)	108054	640	1,800	NA	4.1E+6	8.9E+6	7.7E+6	2.00E+7	8.8E+5	4.8E+6
Vinyl chloride	75014	2.0 (A)	2.0 (A)	15	110	690	290	2.76E+6	17,000	ID
White phosphorus (R)	12185103	0.11	0.31	NA	NLV	NLV	3,200	NA	ID	ID
Xylenes (I)	1330207	280 (E)	280 (E)	35	1.9E+5 (S)	1.9E+5 (S)	1.9E+5 (S)	1.86E+5	35,000	1.9E+5 (S)
Zinc (B)	7440666	2,400	5,000 (E)	(G)	NLV	NLV	7.0E+7	NA	ID	ID

040274 - 2/10/2006

ATTACHMENT A
SOIL: RESIDENTIAL AND COMMERCIAL I

PART 201 GENERIC CLEANUP CRITERIA AND SCREENING LEVELS

Developed under the authority of the

NATURAL RESOURCES AND ENVIRONMENTAL PROTECTION ACT, 1994 PA 451, AS AMENDED

Residential and Commercial I soil criteria were calculated using currently available toxicological and chemical-specific data.These criteria may change as new data become available. They are not necessarily final cleanup standards. Current criteria are available on theERD Homepage at www.deq.state.mi.us/erd. Scientific notation is represented by E+ or E- a value, for example 2×10^6 is reported as 2.0E+6. Please refer to Operational Memorandum #6 for analytical methods and method detection limits. All values are expressed in units of parts per billion (ug/Kg).

Changes made since the last revision of the tables (January 1999) are shaded

			Groundwater Protection			Indoor Air	Ambient Air (Y)				Direct Contact	
		#10	#11	#12	#13	#14	#15	#16	#17	#18	#19	#20
Chemical	Chemical Abstract Service Number	Statewide Default Background Levels	Drinking Water Protection Criteria	Groundwater Surface Water Interface Protection Criteria	Groundwater Contact Protection Criteria	Soil Volatilization to Indoor Air Inhalation Criteria	Infinite Source Volatile Soil Inhalation Criteria (VSIC)	Finite VSIC for 5 Meter Source Thickness	Finite VSIC for 2 Meter Source Thickness	Particulate Soil Inhalation Criteria	Direct Contact Criteria	Soil Saturation Concentration Screening Levels
Acenaphthene	83329	NA	3.0E+5	4,300	9.6E+5	1.9E+8	8.1E+7	8.1E+7	8.1E+7	1.4E+10	7.6E+7	NA
Acenaphthylene	208968	NA	2,900	ID	4.4E+5	1.6E+6	2.2E+6	2.2E+6	2.2E+6	2.3E+9	1.5E+6	NA
Acetaldehyde (I)	75070	NA	19,000	NA	1.1E+8 (C)	2.2E+5	1.7E+5	1.7E+5	2.8E+5	6.0E+8	1.4E+7	1.1E+8
Acetic acid (I)	64197	NA	9.0E+5 (M)	9.0E+5 (M)	6.5E+8 (C)	NLV	NLV	NLV	NLV	1.7E+10	6.3E+7	6.5E+8
Acetone (I)	67641	NA	15,000	34,000	1.1E+8 (C)	1.1E+8 (C)	1.3E+8	1.3E+8	1.9E+8	3.9E+11	1.1E+7	1.1E+8
Acetonitrile (I)	75058	NA	2,800	NA	2.2E+7 (C)	2.2E+7 (C)	9.2E+6	9.2E+6	1.2E+7	2.3E+10	2.1E+6	2.2E+7
Acrolein (I)	107028	NA	2,400	NA	2.3E+7 (C)	410	310	310	610	1.3E+6	1.8E+6	2.3E+7
Acrylamide	79061	NA	10	NA	1.7E+5	NLV	NLV	NLV	NLV	2.4E+6	2,200	NA
Acrylic acid (I)	79107	NA	78,000	NA	1.3E+8 (C)	2.6E+6	2.2E+5	2.3E+5	2.3E+5	6.7E+7	5.8E+7	1.3E+8
Acrylonitrile (I)	107131	NA	32	98 (X)	1.6E+5	6,600	5,000	5,100	10,000	4.6E+7	4,700	8.3E+6
Alachlor	15972608	NA	52	290 (X)	ID	NLV	NLV	NLV	NLV	ID	1.2E+5	NA
Aldicarb	116063	NA	60	NA	2.4E+6	NLV	NLV	NLV	NLV	ID	4.2E+5	NA
Aldicarb sulfoxide	1646873	NA	80	NA	6.4E+7	NLV	NLV	NLV	NLV	ID	5.5E+5	NA
Aldicarb sulfone	1646884	NA	50 (M)	NA	5.2E+7	NLV	NLV	NLV	NLV	ID	4.6E+5	NA
Aldrin	309002	NA	NLL	NLL	NLL	1.3E+6	58,000	58,000	58,000	6.4E+5	580	NA
Aluminum (B)	7429905	6.9E+6	1,000	NA	1.0E+9 (D)	NLV	NLV	NLV	NLV	ID	4.2E+7	NA
Ammonia	7664417	NA	ID (N)	(AC)	ID	ID	ID	ID	ID	6.7E+9	ID	1.0E+7
Aniline (I)	62533	NA	3,000	IP	4.5E+6 (C)	NLV	NLV	NLV	NLV	6.7E+7	1.7E+6	4.5E+6
Anthracene	120127	NA	41,000	ID	41,000	1.0E+9 (D)	1.4E+9	1.4E+9	1.4E+9	6.7E+10	4.2E+8	NA
Antimony (B)	7440360	NA	4,300	ID	5.4E+7	NLV	NLV	NLV	NLV	3.3E+8	1.5E+5	NA
Arsenic (B)	7440382	5,800	23,000	70,000 (X)	2.2E+6	NLV	NLV	NLV	NLV	7.2E+5	6,600	NA
Asbestos (AB)	1332214	NA	ID	NA	ID	NLV	NLV	NLV	NLV	1.0E+7 (M)	1.0E+7	NA
Atrazine	1912249	NA	60	150 (X)	32,000	NLV	NLV	NLV	NLV	ID	45,000	NA

REV. 1
8/99

040275 - 2/10/2006

ATTACHMENT A
SOIL: RESIDENTIAL AND COMMERCIAL I
PART 201 GENERIC CLEANUP CRITERIA AND SCREENING LEVELS

			Groundwater Protection			Indoor Air	Ambient Air (Y)				Direct Contact	
		#10	#11	#12	#13	#14	#15	#16	#17	#18	#19	#20
Chemical	Chemical Abstract Service Number	Statewide Default Background Levels	Drinking Water Protection Criteria	Groundwater Surface Water Interface Protection Criteria	Groundwater Contact Protection Criteria	Soil Volatilization to Indoor Air Inhalation Criteria	Infinite Source Volatile Soil Inhalation Criteria (VSIC)	Finite VSIC for 5 Meter Source Thickness	Finite VSIC for 2 Meter Source Thickness	Particulate Soil Inhalation Criteria	Direct Contact Criteria	Soil Saturation Concentration Screening Levels
Azobenzene	103333	NA	1,400	NA	76,000	1.1E+5	ID	ID	ID	1.0E+8	90,000	NA
Barium (B)	7440393	75,000	1.3E+6	1.3E+5	1.0E+9 (D)	NLV	NLV	NLV	NLV	3.3E+8	3.0E+7	NA
Benzene (I)	71432	NA	100	4,000 (X)	1.9E+5	1,600	13,000	34,000	79,000	3.8E+8	88,000	4.0E+5
Benzidine	92875	NA	1,000 (M)	ID	1,000 (M)	NLV	NLV	NLV	NLV	46,000	1,000 (M)	NA
Benzo(a)anthracene (Q)	56553	NA	NLL	NLL	NLL	NLV	NLV	NLV	NLV	ID	14,000	NA
Benzo(b)fluoranthene (Q)	205992	NA	NLL	NLL	NLL	ID	ID	ID	ID	ID	14,000	NA
Benzo(k)fluoranthene (Q)	207089	NA	NLL	NLL	NLL	NLV	NLV	NLV	NLV	ID	1.4E+5	NA
Benzo(g,h,i)perylene	191242	NA	NLL	NLL	NLL	NLV	NLV	NLV	NLV	8.0E+8	1.5E+6	NA
Benzo(a)pyrene (Q)	50328	NA	NLL	NLL	NLL	NLV	NLV	NLV	NLV	1.5E+6	1,400	NA
Benzoic acid	65850	NA	6.4E+5	NA	7.0E+7	NLV	NLV	NLV	NLV	ID	1.0E+9 (D)	NA
Benzyl alcohol	100516	NA	2.0E+5	NA	5.8E+6 (C)	NLV	NLV	NLV	NLV	3.3E+11	5.8E+6 (C)	5.8E+6
Benzyl chloride	100447	NA	100	NA	40,000	6,300	14,000	14,000	17,000	6.2E+7	15,000	2.3E+5
Beryllium (B)	7440417	NA	51,000	(G)	1.0E+9	NLV	NLV	NLV	NLV	1.3E+6	2.1E+6	NA
bis(2-chloroethoxy)ethane	112265	NA	ID	NA	ID	NLV	NLV	NLV	NLV	ID	ID	2.7E+6
bis(2-Chloroethyl)ether (I)	111444	NA	330 (M)	NA	42,000	8,300	3,800	3,800	3,800	9.4E+6	2,300	2.2E+6
bis(2-Ethylhexyl)phthalate	117817	NA	NLL	NLL	NLL	NLV	NLV	NLV	NLV	7.0E+8	7.0E+5	1.0E+7
Boron (B)	7440428	NA	10,000	38,000	2.6E+8	NLV	NLV	NLV	NLV	ID	2.2E+6	NA
Bromobenzene (I)	108861	NA	530	NA	3.0E+5	3.1E+5	4.5E+5	4.5E+5	4.5E+5	5.3E+8	4.1E+4	7.6E+5
Bromodichloromethane	75274	NA	2,000 (W)	ID	2.2E+5	1,200	9,100	9,700	19,000	8.4E+7	41,000	1.5E+6
Bromoform	75252	NA	2,000 (W)	NA	8.7E+5 (C)	1.5E+5	9.0E+5	9.0E+5	9.0E+5	2.8E+9	3.2E+5	8.7E+5
Bromomethane	74839	NA	200	700	1.3E+6	860	11,000	57,000	1.4E+5	3.3E+8	1.5E+5	2.2E+6
n-Butanol (I)	71363	NA	19,000	NA	8.7E+6 (C)	NLV	NLV	NLV	NLV	2.3E+10	8.7E+6 (C)	8.7E+6
2-Butanone (MEK) (I)	78933	NA	2.6E+5	44,000	2.7E+7 (C)	2.7E+7 (C)	2.9E+7	2.9E+7	3.5E+7	6.7E+10	2.7E+7 (C)	2.7E+7
n-Butyl acetate (I)	123864	NA	11,000	NA	1.1E+6 (C)	1.1E+6 (C)	ID	ID	ID	6.3E+10	1.1E+6 (C)	1.1E+6
t-Butyl alcohol (I)	75650	NA	78,000	NA	1.1E+8 (C)	1.1E+8 (C)	ID	ID	ID	2.0E+11	5.9E+7	1.1E+8
Butyl benzyl phthalate	85687	NA	3.1E+5 (C)	26,000 (X)	3.1E+5 (C)	NLV	NLV	NLV	NLV	4.7E+10	3.1E+5 (C)	3.1E+5
n-Butylbenzene	104518	NA	1,600	NA	ID	ID	ID	ID	ID	ID	1.2E+6	1.0E+7
sec-Butylbenzene	135988	NA	1,600	NA	ID	ID	ID	ID	ID	ID	1.20E+06	1.0E+7
tert-Butylbenzene (I)	98066	NA	1,600	NA	ID	ID	ID	ID	ID	ID	1.2E+6	1.0E+7
Cadmium (B)	7440439	1,200	6,000	(G,X)	2.5E+8	NLV	NLV	NLV	NLV	1.7E+6	4.2E+5	NA
Camphene (I)	79925	NA	ID	NA	ID	ID	ID	ID	ID	ID	ID	NA
Caprolactam	105602	NA	1.2E+5	NA	1.0E+9 (D)	NLV	NLV	NLV	NLV	6.7E+8	3.4E+8	NA

040276 - 2/10/2006

ATTACHMENT A
SOIL: RESIDENTIAL AND COMMERCIAL I
PART 201 GENERIC CLEANUP CRITERIA AND SCREENING LEVELS

			Groundwater Protection			Indoor Air	Ambient Air (Y)				Direct Contact	
		#10	#11	#12	#13	#14	#15	#16	#17	#18	#19	#20
Chemical	Chemical Abstract Service Number	Statewide Default Background Levels	Drinking Water Protection Criteria	Groundwater Surface Water Interface Protection Criteria	Groundwater Contact Protection Criteria	Soil Volatilization to Indoor Air Inhalation Criteria	Infinite Source Volatile Soil Inhalation Criteria (VSIC)	Finite VSIC for 5 Meter Source Thickness	Finite VSIC for 2 Meter Source Thickness	Particulate Soil Inhalation Criteria	Direct Contact Criteria	Soil Saturation Concentration Screening Levels
Carbaryl	63252	NA	14,000	NA	2.6E+6	ID	ID	ID	ID	ID	4.1E+7	NA
Carbazole	86748	NA	860	330 (M)	3.2E+5	NLV	NLV	NLV	NLV	ID	1.3E+5	NA
Carbofuran	1563662	NA	800	NA	6.6E+6	NLV	NLV	NLV	NLV	ID	5.5E+5	NA
Carbon disulfide (I,R)	75150	NA	16,000	ID	2.8E+5 (C)	76,000	1.3E+6	7.9E+6	1.9E+7	4.7E+10	2.8E+5 (C)	2.8E+5
Carbon tetrachloride	56235	NA	100	900 (X)	32,000	190	3,500	12,000	28,000	1.3E+8	20,000	3.9E+5
Chlordane (J)	57749	NA	NLL	NLL	NLL	1.1E+7	1.2E+6	1.2E+6	1.2E+6	3.1E+7	1.7E+4	NA
Chloride (B)	16887006	NA	5.0E+6	NA	ID	NLV	NLV	NLV	NLV	ID	5.0E+5 (F)	NA
Chlorobenzene (I)	108907	NA	2,000	940	2.6E+5 (C)	1.2E+5	7.7E+5	9.9E+5	2.1E+6	4.7E+9	2.6E+5 (C)	2.6E+5
Chloroethane (I)	75003	NA	4,400	ID	9.7E+5 (C)	9.7E+5 (C)	3.1E+7	1.2E+8	2.8E+8	6.7E+11	6.7E+5	9.7E+5
2-Chloroethyl vinyl ether	110758	NA	ID	NA	ID	ID	ID	ID	ID	ID	ID	1.9E+6
Chloroform	67663	NA	2,000 (W)	3,400 (X)	1.5E+6 (C)	7,200	45,000	1.2E+5	2.7E+5	1.3E+9	4.2E+5	1.5E+6
Chloromethane (I)	74873	NA	1,300	ID	1.1E+6 (C)	2,300	40,000	4.1E+5	1.0E+6	4.9E+9	2.0E+5	1.1E+6
4-Chloro-3-methylphenol	59507	NA	5,600	NA	2.4E+6	NLV	NLV	NLV	NLV	ID	2.2E+6	NA
beta-Chloronaphthalene	91587	NA	6.5E+5	NA	2.3E+6	ID	ID	ID	ID	ID	2.7E+7	NA
2-Chlorophenol	95578	NA	900	440	1.6E+6	ID	ID	ID	ID	ID	6.8E+5	8.1E+6
o-Chlorotoluene (I)	95498	NA	3,300	NA	5.0E+5 (C)	5.0E+5 (C)	ID	ID	ID	1.7E+11	5.0E+5 (C)	5.0E+5
Chlorpyrifos	2921882	NA	17,000	NA	8.4E+5	ID	ID	ID	ID	1.3E+8	1.3E+6	NA
Chromium (III) (B,H)	16065831	18,000 (total)	1.0E+9 (D)	(G,X)	1.0E+9 (D)	NLV	NLV	NLV	NLV	3.3E+8	6.3E+8	NA
Chromium (VI) (B,H)	18540299	18,000 (total)	30,000	3,300	3.0E+8	NLV	NLV	NLV	NLV	2.6E+5	2.0E+6	NA
Chrysene (Q)	218019	NA	NLL	NLL	NLL	ID	ID	ID	ID	ID	1.4E+6	NA
Cobalt (B)	7440484	6,800	1,000	2,000	2.2E+7	NLV	NLV	NLV	NLV	1.3E+7	2.1E+6	NA
Copper (B)	7440508	32,000	1.6E+8	(G)	1.0E+9 (D)	NLV	NLV	NLV	NLV	1.3E+8	1.6E+7	NA
Cyanazine	21725462	NA	500 (M)	1,100 (X)	34,000	NLV	NLV	NLV	NLV	ID	17,000	NA
Cyanide (R)	57125	NA	4,000	400	2.5E+5 (P)	NLV	NLV	NLV	NLV	2.5E+5 (P)	2.5E+5 (P)	NA
Cyclohexanone (I)	108941	NA	5.2E+6	NA	2.2E+8 (C)	17,000	ID	ID	ID	6.7E+10	2.2E+8 (C)	2.2E+8
Dacthal	1861321	NA	50,000	NA	3.4E+5	NLV	NLV	NLV	NLV	ID	4.2E+6	NA
Dalapon	75990	NA	4,000	NA	5.9E+7 (C)	NLV	NLV	NLV	NLV	ID	9.3E+6	5.9E+7
4-4'-DDD	72548	NA	NLL	NLL	NLL	NLV	NLV	NLV	NLV	ID	41,000	NA
4-4'-DDE	72559	NA	NLL	NLL	NLL	ID	ID	ID	ID	ID	29,000	NA
4-4'-DDT	50293	NA	NLL	NLL	NLL	NLV	NLV	NLV	NLV	3.2E+7	29,000	NA
Decabromodiphenyl ether	1163195	NA	1.4E+5	NA	1.4E+5	1.0E+9 (D)	ID	ID	ID	2.3E+9	4.2E+6	NA
Di-n-butyl phthalate	84742	NA	7.6E+5 (C)	11,000	7.6E+5 (C)	NLV	NLV	NLV	NLV	3.3E+9	7.6E+5 (C)	7.6E+5

040277 - 2/10/2006

ATTACHMENT A
SOIL: RESIDENTIAL AND COMMERCIAL I
PART 201 GENERIC CLEANUP CRITERIA AND SCREENING LEVELS

			Groundwater Protection			Indoor Air	Ambient Air (Y)				Direct Contact	
		#10	#11	#12	#13	#14	#15	#16	#17	#18	#19	#20
Chemical	Chemical Abstract Service Number	Statewide Default Background Levels	Drinking Water Protection Criteria	Groundwater Surface Water Interface Protection Criteria	Groundwater Contact Protection Criteria	Soil Volatilization to Indoor Air Inhalation Criteria	Infinite Source Volatile Soil Inhalation Criteria (VSIC)	Finite VSIC for 5 Meter Source Thickness	Finite VSIC for 2 Meter Source Thickness	Particulate Soil Inhalation Criteria	Direct Contact Criteria	Soil Saturation Concentration Screening Levels
Di(2-ethylhexyl) adipate	103231	NA	9.6E+5 (C)	NA	9.6E+5 (C)	NLV	NLV	NLV	NLV	ID	9.6E+5 (C)	9.6E+5
Di-n-octyl phthalate	117840	NA	1.0E+8	ID	1.4E+8 (C)	NLV	NLV	NLV	NLV	ID	7.6E+6	1.4E+8
Diacetone alcohol (I)	123422	NA	ID	NA	ID	NLV	NLV	NLV	NLV	1.6E+11	ID	1.1E+8
Diazinon	333415	NA	95	NA	80,000	NLV	NLV	NLV	NLV	ID	76,000	3.1E+5
Dibenzo(a,h)anthracene (Q)	53703	NA	NLL	NLL	NLL	NLV	NLV	NLV	NLV	ID	1,400	NA
Dibenzofuran	132649	NA	ID	1,700	ID	ID	ID	ID	ID	ID	ID	NA
Dibromochloromethane	124481	NA	2,000 (W)	ID	1.9E+5	3,900	24,000	24,000	33,000	1.3E+8	31,000	6.1E+5
Dibromochloropropane	96128	NA	4.0	NA	1,200 (C)	1,200 (C)	1,200 (C)	1,200 (C)	1,200 (C)	1,200 (C)	300	1,200
Dibromomethane	74953	NA	1,600	NA	1.9E+6	ID	ID	ID	ID	ID	2.0E+6 (C)	2.0E+6
1,2-Dichlorobenzene	95501	NA	13,000	340	2.1E+5 (C)	2.1E+5 (C)	3.9E+7	3.9E+7	5.2E+7	1.0E+11	2.1E+5 (C)	2.1E+5
1,3-Dichlorobenzene	541731	NA	17,000	1,100	2.0E+5 (C)	ID	ID	ID	ID	ID	2.0E+5 (C)	2.0E+5
1,4-Dichlorobenzene	106467	NA	1,600	280	60,000	19,000	77,000	77,000	1.1E+5	4.5E+8	1.1E+5	NA
3,3'-Dichlorobenzidine	91941	NA	2,000 (M)	2,000 (M,X)	6,900	NLV	NLV	NLV	NLV	6.5E+6	5,700	NA
Dichlorodifluoromethane	75718	NA	93,000	ID	1.0E+6 (C)	9.0E+5	5.3E+7	5.5E+8	1.4E+9	3.3E+12	1.0E+6 (C)	1.0E+6
1,1-Dichloroethane (I)	75343	NA	18,000	IP	7.9E+5 (C)	7.9E+5 (C)	3.0E+7	9.5E+7	2.3E+8	5.4E+11	7.9E+5 (C)	7.9E+5
1,2-Dichloroethane (I)	107062	NA	100	7,200 (X)	2.2E+5	2,100	6,100	11,000	26,000	1.2E+8	28,000	1.2E+6
1,1-Dichloroethylene (I)	75354	NA	140	1,300 (X)	1.8E+5	62	1,100	5,300	13,000	6.2E+7	99,000	5.8E+5
cis-1,2-Dichloroethylene (I)	156592	NA	1,400	ID	6.4E+5 (C)	6.4E+5 (C)	4.0E+7	9.6E+7	2.2E+8	5.3E+11	6.4E+5 (C)	6.4E+5
trans-1,2-Dichloroethylene	156605	NA	2,000	ID	1.4E+6 (C)	1.4E+6 (C)	3.1E+7	9.4E+7	2.2E+8	5.3E+11	1.4E+6 (C)	1.4E+6
2,6-Dichloro-4-nitroaniline	99309	NA	44,000	NA	1.4E+5	NLV	NLV	NLV	NLV	ID	1.3E+8	NA
2,4-Dichlorophenol	120832	NA	2,600	680	1.5E+6	NLV	NLV	NLV	NLV	5.1E+9	4.2E+6	1.0E+7
2,4-Dichlorophenoxyacetic acid	94757	NA	1,400	4,400	2.2E+6	NLV	NLV	NLV	NLV	6.7E+9	4.2E+6	NA
1,2-Dichloropropane (I)	78875	NA	100	5,800 (X)	1.5E+5	4,000	25,000	50,000	1.1E+5	2.7E+8	38,000	5.5E+5
1,3-Dichloropropene (I,J)	542756	NA	94	NA	52,000	79	1,400	5,200	12,000	6.0E+7	14,000	6.2E+5
Dichlorovos	62737	NA	58	NA	2.2E+5	NLV	NLV	NLV	NLV	3.3E+7	34,000	2.5E+6

040278 - 2/10/2006

ATTACHMENT A
SOIL: RESIDENTIAL AND COMMERCIAL I
PART 201 GENERIC CLEANUP CRITERIA AND SCREENING LEVELS

			Groundwater Protection			Indoor Air	Ambient Air (Y)				Direct Contact	
		#10	#11	#12	#13	#14	#15	#16	#17	#18	#19	#20
Chemical	Chemical Abstract Service Number	Statewide Default Background Levels	Drinking Water Protection Criteria	Groundwater Surface Water Interface Protection Criteria	Groundwater Contact Protection Criteria	Soil Volatilization to Indoor Air Inhalation Criteria	Infinite Source Volatile Soil Inhalation Criteria (VSIC)	Finite VSIC for 5 Meter Source Thickness	Finite VSIC for 2 Meter Source Thickness	Particulate Soil Inhalation Criteria	Direct Contact Criteria	Soil Saturation Concentration Screening Levels
Dicyclohexyl phthalate	84617	NA	ID	NA	ID	ID	ID	ID	ID	ID	ID	NA
Dieldrin	60571	NA	NLL	NLL	NLL	1.4E+5	19,000	19,000	19,000	6.8E+5	620	NA
Diethyl ether (I)	60297	NA	100 (M)	ID	7.4E+6 (C)	7.4E+6 (C)	8.6E+7	1.5E+8	3.4E+8	8.0E+11	7.4E+6 (C)	7.4E+6
Diethyl phthalate	84662	NA	1.1E+5	NA	7.4E+5 (C)	NLV	NLV	NLV	NLV	3.3E+9	7.4E+5 (C)	7.4E+5
Diethylene glycol monobutyl ether	112345	NA	1,800	NA	8.6E+7	NLV	NLV	NLV	NLV	1.3E+9	5.1E+6	1.1E+8
Diisopropylamine (I)	108189	NA	110	NA	3.8E+5	ID	ID	ID	ID	ID	85,000	6.7E+6
Dimethyl phthalate	131113	NA	7.9E+5 (C)	NA	7.9E+5 (C)	NLV	NLV	NLV	NLV	3.3E+9	7.9E+5 (C)	7.9E+5
N,N-Dimethylacetamide	127195	NA	3,600	82,000 (X)	1.1E+8 (C)	NLV	NLV	NLV	NLV	ID	2.7E+6	1.1E+8
N,N-Dimethylaniline	121697	NA	320	NA	3.2E+5	1.7E+5	ID	ID	ID	2.6E+8	2.4E+5	8.0E+5
Dimethylformamide (I)	68122	NA	14,000	NA	1.1E+8 (C)	NLV	NLV	NLV	NLV	2.0E+9	1.1E+7	1.1E+8
2,4-Dimethylphenol	105679	NA	7,400	330 (M)	8.8E+6	NLV	NLV	NLV	NLV	4.7E+9	2.1E+7	NA
2,6-Dimethylphenol	576261	NA	330 (M)	NA	1.1E+5	NLV	NLV	NLV	NLV	ID	2.5E+5	NA
3,4-Dimethylphenol	95658	NA	330 (M)	NA	3.0E+5	NLV	NLV	NLV	NLV	ID	5.9E+5	NA
Dimethylsulfoxide	67685	NA	4.4E+6	3.8E+6	1.8E+7 (C)	NLV	NLV	NLV	NLV	ID	1.8E+7 (C)	1.8E+7
2,4-Dinitrotoluene	121142	NA	15,000	NA	3.8E+6	NLV	NLV	NLV	NLV	1.6E+7	15,000	NA
Dinoseb	88857	NA	290	NA	1.4E+5 (C)	ID	ID	ID	ID	ID	1.4E+5 (C)	1.4E+5
1,4-Dioxane (I)	123911	NA	1,500	56,000 (X)	3.4E+7	NLV	NLV	NLV	NLV	5.7E+8	2.3E+5	9.7E+7
Diquat	85007	NA	400	NA	1.4E+7	NLV	NLV	NLV	NLV	ID	9.3E+5	NA
Diuron	330541	NA	620	NA	7.5E+5	NLV	NLV	NLV	NLV	ID	1.8E+6	NA
Endosulfan (J)	115297	NA	NLL	NLL	NLL	ID	ID	ID	ID	ID	97,000	NA
Endothall	145733	NA	NLL	NLL	NLL	NLV	NLV	NLV	NLV	2.3E+9	7.2E+6	NA
Endrin	72208	NA	NLL	NLL	NLL	NLV	NLV	NLV	NLV	ID	72,000	NA
Epichlorohydrin (I)	106898	NA	1,700	NA	7.3E+6 (C)	64,000	31,000	31,000	35,000	6.7E+7	2.6E+5	7.3E+6
Ethanol (I)	64175	NA	3.8E+7	IP	1.1E+8 (C)	NLV	NLV	NLV	NLV	1.3E+12	1.1E+8 (C)	1.1E+8
Ethyl acetate (I)	141786	NA	1.3E+5	NA	7.5E+6 (C)	7.5E+6 (C)	4.9E+7	4.9E+7	9.8E+7	2.1E+11	7.5E+6 (C)	7.5E+6
Ethylbenzene (I)	100414	NA	1,500	360	1.4E+5 (C)	1.4E+5 (C)	9.5E+6	1.4E+7	3.0E+7	6.7E+10	1.4E+5 (C)	1.4E+5
Ethylene dibromide	106934	NA	10 (M)	NA	320	670	1,700	1,700	3,300	1.4E+7	30	8.9E+5
Ethylene glycol	107211	NA	3.0E+5	NA	1.1E+8 (C)	NLV	NLV	NLV	NLV	8.3E+10	1.1E+8 (C)	1.1E+8
Ethylene glycol monobutyl ether	111762	NA	3,900	NA	4.1E+7 (C)	14,000	3.3E+5	2.7E+6	6.6E+6	1.6E+10	3.0E+6	4.1E+7
Fluoranthene	206440	NA	7.2E+5	5,500	7.2E+5	1.0E+9 (D)	7.4E+8	7.4E+8	7.4E+8	9.3E+9	5.1E+7	NA
Fluorene	86737	NA	3.9E+5	2,400	8.9E+5	5.8E+8	1.3E+8	1.3E+8	1.3E+8	9.3E+9	5.1E+7	NA
Fluorine (soluble fluoride) (B)	7782414	NA	40,000	NA	2.6E+8	NLV	NLV	NLV	NLV	ID	2.5E+7	NA

REV. 1
8/99

040279 - 2/10/2006

ATTACHMENT A
SOIL: RESIDENTIAL AND COMMERCIAL I
PART 201 GENERIC CLEANUP CRITERIA AND SCREENING LEVELS

			Groundwater Protection			Indoor Air	Ambient Air (Y)				Direct Contact	
		#10	#11	#12	#13	#14	#15	#16	#17	#18	#19	#20
Chemical	Chemical Abstract Service Number	Statewide Default Background Levels	Drinking Water Protection Criteria	Groundwater Surface Water Interface Protection Criteria	Groundwater Contact Protection Criteria	Soil Volatilization to Indoor Air Inhalation Criteria	Infinite Source Volatile Soil Inhalation Criteria (VSIC)	Finite VSIC for 5 Meter Source Thickness	Finite VSIC for 2 Meter Source Thickness	Particulate Soil Inhalation Criteria	Direct Contact Criteria	Soil Saturation Concentration Screening Levels
Formaldehyde	50000	NA	26,000	2,400	6.0E+7 (C)	12,000	13,000	23,000	52,000	2.4E+8	2.0E+7	6.0E+7
Formic acid (I,U)	64186	NA	9.0E+5 (M)	ID	1.1E+8 (C)	1.5E+6	9.0E+5 (M)	9.0E+5 (M)	9.0E+5 (M)	1.3E+8	1.1E+8 (C)	1.1E+8
1-Formylpiperidine	2591868	NA	1,600	NA	ID	ID	ID	ID	ID	ID	1.2E+6	1.0E+7
Gentian violet	548629	NA	170	NA	9.8E+6	NLV	NLV	NLV	NLV	ID	99,000	NA
Glyphosate	1071836	NA	NLL	NLL	NLL	NLV	NLV	NLV	NLV	ID	4.2E+7	NA
Heptachlor	76448	NA	NLL	NLL	NLL	3.5E+5	61,000	61,000	61,000	2.4E+6	2,200	NA
Heptachlor epoxide	1024573	NA	NLL	NLL	NLL	NLV	NLV	NLV	NLV	1.2E+6	1,100	NA
n-Heptane (I)	142825	NA	2.4E+5 (C)	NA	2.4E+5 (C)	2.4E+5 (C)	ID	ID	ID	2.3E+11	2.4E+5 (C)	2.4E+5
Hexabromobenzene	87821	NA	5,400	ID	1.0E+7	ID	ID	ID	ID	ID	1.2E+6	NA
Hexachlorobenzene (C-66)	118741	NA	1,800	ID	3,500	41,000	16,000	16,000	16,000	6.8E+6	6,200	NA
Hexachlorobutadiene (C-46)	87683	NA	19,000	ID	3.4E+5	1.3E+5	1.3E+5	1.3E+5	1.3E+5	1.4E+8	1.3E+5	3.5E+5
alpha-Hexachlorocyclohexane	319846	NA	25	NA	2,800	1.3E+5	25,000	25,000	25,000	1.7E+6	1,600	NA
beta-Hexachlorocyclohexane	319857	NA	85	NA	10,000	NLV	NLV	NLV	NLV	5.9E+6	5,500	NA
Hexachlorocyclopentadiene (C-56)	77474	NA	36,000	ID	81,000 (C)	ID	ID	ID	ID	ID	81,000 (C)	81,000
Hexachloroethane	67721	NA	17,000	1,800 (X)	4.1E+5	1.9E+5	1.2E+6	1.2E+6	1.2E+6	2.3E+8	1.8E+5	NA
n-Hexane (I)	110543	NA	44,000 (C)	NA	44,000 (C)	44,000 (C)	ID	ID	ID	1.3E+10	44,000 (C)	44,000
2-Hexanone (I)	591786	NA	20,000	NA	2.5E+6 (C)	9.9E+5	ID	ID	ID	2.7E+9	2.5E+6 (C)	2.5E+6
Indeno(1,2,3-cd)pyrene (Q)	193395	NA	NLL	NLL	NLL	NLV	NLV	NLV	NLV	ID	14,000	NA
Iron (B)	7439896	1.2E+7	6,000	NA	ID	NLV	NLV	NLV	NLV	ID	ID	NA
Isobutyl alcohol (I)	78831	NA	46,000	NA	8.9E+6 (C)	8.9E+6 (C)	7.9E+7	7.9E+7	7.9E+7	1.0E+11	8.9E+6 (C)	8.9E+6
Isophorone	78591	NA	18,000	11,000 (X)	2.4E+6 (C)	NLV	NLV	NLV	NLV	1.9E+10	2.4E+6 (C)	2.4E+6
Isopropyl alcohol (I)	67630	NA	9,400	NA	1.1E+8 (C)	NLV	NLV	NLV	NLV	1.5E+10	7.0E+6	1.1E+8
Isopropyl benzene (I)	98828	NA	90,000	ID	3.9E+5 (C)	3.9E+5 (C)	1.7E+6	ID	ID	5.8E+9	3.9E+5 (C)	3.9E+5
Lead (B)	7439921	21,000	1,000 (M)	(G,M,X)	ID	NLV	NLV	NLV	NLV	1.0E+8	4.0E+5	NA
Lindane	58899	NA	20 (M)	20 (M)	3,200	ID	ID	ID	ID	ID	7,600	NA
Lithium (B)	7439932	9,800	3,400	500	1.2E+8	NLV	NLV	NLV	NLV	ID	1.9E+7	NA
Magnesium (B)	7439954	NA	8.4E+6	NA	1.0E+9 (D)	NLV	NLV	NLV	NLV	6.7E+9	1.0E+9 (D)	NA

REV. 1
8/99

040280 - 2/10/2006

ATTACHMENT A
SOIL: RESIDENTIAL AND COMMERCIAL I
PART 201 GENERIC CLEANUP CRITERIA AND SCREENING LEVELS

			Groundwater Protection			Indoor Air	Ambient Air (Y)				Direct Contact	
		#10	#11	#12	#13	#14	#15	#16	#17	#18	#19	#20
Chemical	Chemical Abstract Service Number	Statewide Default Background Levels	Drinking Water Protection Criteria	Groundwater Surface Water Interface Protection Criteria	Groundwater Contact Protection Criteria	Soil Volatilization to Indoor Air Inhalation Criteria	Infinite Source Volatile Soil Inhalation Criteria (VSIC)	Finite VSIC for 5 Meter Source Thickness	Finite VSIC for 2 Meter Source Thickness	Particulate Soil Inhalation Criteria	Direct Contact Criteria	Soil Saturation Concentration Screening Levels
Manganese (B)	7439965	4.4E+5	2,000 (M)	(G,X)	2.0E+8	NLV	NLV	NLV	NLV	3.3E+6	2.0E+7	NA
Mercury (Inorganic) (B)	7439976	130	1,700	170	47,000	NLV	NLV	NLV	NLV	ID	1.3E+5	NA
Methane	74828	NA	ID	ID	ID	(K)	ID	ID	ID	ID	ID	ID
Methanol (I)	67561	NA	74,000	ID	3.1E+6 (C)	5.0E+5	3.1E+7	4.4E+7	9.6E+7	2.2E+11	3.1E+6 (C)	3.1E+6
Methoxychlor	72435	NA	1.3E+5	NA	1.4E+5	ID	ID	ID	ID	ID	2.1E+6	NA
2-Methoxyethanol (I)	109864	NA	150	ID	1.8E+7	NLV	NLV	NLV	NLV	1.3E+9	1.1E+5	1.1E+8
2-Methyl-4-chlorophenoxyacetic acid	94746	NA	390	NA	4.3E+5	NLV	NLV	NLV	NLV	ID	4.2E+5	NA
2-Methyl-4,6-dinitrophenol	534521	NA	1,700 (M)	NA	1.8E+5	NLV	NLV	NLV	NLV	ID	1.5E+5	NA
Methyl parathion	298000	NA	44	NA	66,000	NLV	NLV	NLV	NLV	ID	1.1E+5	NA
4-Methyl-2-pentanone (MIBK) (I)	108101	NA	36,000	ID	2.7E+6 (C)	2.7E+6 (C)	4.5E+7	4.5E+7	6.7E+7	1.4E+11	2.7E+6 (C)	2.7E+6
Methyl-tert-butyl ether (MTBE)	1634044	NA	800	15,000 (X)	6.0E+6 (C)	6.0E+6 (C)	2.6E+7	3.9E+7	8.7E+7	2.0E+11	8.5E+5	6.0E+6
N-Methyl-morpholine (I)	109024	NA	400	NA	3.2E+7	NLV	NLV	NLV	NLV	ID	3.0E+5	1.1E+8
Methylcyclopentane (I)	96377	NA	ID	NA	ID	ID	ID	ID	ID	ID	ID	3.4E+5
4,4'-Methylene-bis-2-chloroaniline (MBOCA)	101144	NA	NLL	NLL	NLL	NLV	NLV	NLV	NLV	8.4E+7	10,000	NA
Methylene chloride	75092	NA	100	19,000 (X)	2.2E+6	45,000	2.1E+5	5.9E+5	1.4E+6	6.6E+9	3.4E+5	2.3E+6
2-Methylnaphthalene	91576	NA	57,000	ID	7.1E+6	ID	ID	ID	ID	ID	1.5E+7	NA
2-Methylphenol	95487	NA	7,400	1,600	1.4E+7	NLV	NLV	NLV	NLV	6.7E+9	5.5E+6	NA
3-Methylphenol	108394	NA	7,400	NA	4.5E+6 (C)	NLV	NLV	NLV	NLV	ID	4.5E+6 (C)	4.5E+6
4-Methylphenol	106445	NA	740	ID	1.5E+6	NLV	NLV	NLV	NLV	ID	2.1E+6	NA
Metolachlor	51218452	NA	3,200	NA	4.4E+5 (C)	NLV	NLV	NLV	NLV	ID	4.4E+5 (C)	4.4E+5
Molybdenum (B)	7439987	NA	740	16,000 (X)	2.2E+7	NLV	NLV	NLV	NLV	ID	2.1E+6	NA
Naphthalene	91203	NA	17,000	850	2.0E+6	4.2E+7	4.9E+7	4.9E+7	4.9E+7	3.3E+10	1.5E+7	NA
Nickel (B)	7440020	20,000	1.0E+5	(G)	1.0E+9 (D)	NLV	NLV	NLV	NLV	1.3E+7	3.2E+7	NA
Nitrate (B,N)	14797558	NA	2.0E+5 (N)	NA	1.0E+9 (D)	NLV	NLV	NLV	NLV	ID	ID	NA
Nitrite (B,N)	14797650	NA	20,000 (N)	NA	4.2E+8	NLV	NLV	NLV	NLV	ID	ID	NA
Nitrobenzene (I)	98953	NA	330 (M)	3,600 (X)	1.9E+5	4.9E+5 (C)	3.9E+6	3.9E+6	3.9E+6	3.3E+9	51,000	4.9E+5
2-Nitrophenol	88755	NA	400	ID	1.4E+6	NLV	NLV	NLV	NLV	ID	1.2E+6	NA
n-Nitroso-di-n-propylamine	621647	NA	330 (M)	NA	4,400	NLV	NLV	NLV	NLV	1.6E+6	370	1.5E+6
N-Nitrosodiphenylamine	86306	NA	3,400	NA	6.0E+5	NLV	NLV	NLV	NLV	ID	5.2E+5	NA
Oxamyl	23135220	NA	4,000	NA	1.0E+9 (D)	NLV	NLV	NLV	NLV	ID	1.6E+7	NA
Oxo-hexyl acetate	88230357	NA	1,500	NA	ID	ID	ID	ID	ID	5.4E+9	1.1E+6	1.0E+7
Pendimethalin	40487421	NA	1.1E+6	NA	1.1E+6	NLV	NLV	NLV	NLV	ID	5.1E+7	NA

040281 - 2/10/2006

ATTACHMENT A
SOIL: RESIDENTIAL AND COMMERCIAL I
PART 201 GENERIC CLEANUP CRITERIA AND SCREENING LEVELS

			Groundwater Protection			Indoor Air	Ambient Air (Y)				Direct Contact	
		#10	#11	#12	#13	#14	#15	#16	#17	#18	#19	#20
Chemical	Chemical Abstract Service Number	Statewide Default Background Levels	Drinking Water Protection Criteria	Groundwater Surface Water Interface Protection Criteria	Groundwater Contact Protection Criteria	Soil Volatilization to Indoor Air Inhalation Criteria	Infinite Source Volatile Soil Inhalation Criteria (VSIC)	Finite VSIC for 5 Meter Source Thickness	Finite VSIC for 2 Meter Source Thickness	Particulate Soil Inhalation Criteria	Direct Contact Criteria	Soil Saturation Concentration Screening Levels
Pentachlorobenzene	608935	NA	29,000	NA	1.9E+5 (C)	ID	ID	ID	ID	ID	1.9E+5 (C)	1.9E+5
Pentachloronitrobenzene	82688	NA	37,000	NA	37,000	1.2E+5	2.3E+5	2.3E+5	2.3E+5	3.3E+8	3.2E+6	NA
Pentachlorophenol	87865	NA	3,200	(G,X)	2.7E+5	NLV	NLV	NLV	NLV	1.0E+8	8,100	NA
Pentane (I)	109660	NA	ID	NA	ID	2.4E+5 (C)	ID	ID	ID	1.2E+12	ID	2.4E+5
2-Pentene (I)	109682	NA	ID	NA	ID	ID	ID	ID	ID	ID	ID	2.2E+5
Phenanthrene	85018	NA	12,000	2,300	4.5E+5	1.5E+7	1.3E+5	6.2E+5	6.2E+5	1.3E+8	1.5E+6	NA
Phenol	108952	NA	88,000	4,200	1.2E+7 (C)	NLV	NLV	NLV	NLV	4.0E+10	1.2E+7 (C)	1.2E+7
Phosphorus (total)	7723140	NA	1.3E+6	NA	ID	NLV	NLV	NLV	NLV	ID	1.0E+9 (D)	NA
Picloram	1918021	NA	10,000	NA	ID	NLV	NLV	NLV	NLV	ID	3.0E+7	NA
Piperidine	110894	NA	64	NA	6.4E+5	NLV	NLV	NLV	NLV	9.3E+9	48,000	1.2E+8
Polybrominated biphenyls (J)	37324235	NA	NLL	NLL	NLL	NLV	NLV	NLV	NLV	ID	1,100	NA
Polychlorinated biphenyls (PCBs) (J,T)	1336363	NA	NLL	NLL	NLL	3.0E+6	2.4E+5	7.9E+6	7.9E+6	5.2E+6	(T)	NA
Prometon	1610180	NA	4,900	NA	4.9E+6	NLV	NLV	NLV	NLV	ID	9.3E+6	NA
Propachlor	1918167	NA	1,900	NA	8.4E+6	NLV	NLV	NLV	NLV	ID	5.5E+6	NA
Propazine	139402	NA	4,000	NA	1.7E+5	NLV	NLV	NLV	NLV	ID	1.1E+7	NA
Propionic acid (I)	79094	NA	3.6E+5	NA	1.1E+8 (C)	NLV	NLV	NLV	NLV	2.0E+10	1.1E+8 (C)	1.1E+8
Propyl alcohol (I)	71238	NA	28,000	NA	1.1E+8 (C)	NLV	NLV	NLV	NLV	4.9E+10	2.1E+7	1.1E+8
n-Propylbenzene (I)	103651	NA	1,600	NA	ID	ID	ID	ID	ID	1.3E+9	1.2E+6	1.0E+7
Propylene glycol	57556	NA	3.0E+6	NA	1.0E+7 (C)	NLV	NLV	NLV	NLV	4.0E+11	1.0E+7 (C)	1.0E+7
Pyrene	129000	NA	4.7E+5	ID	4.7E+5	1.0E+9 (D)	6.5E+8	6.5E+8	6.5E+8	6.7E+9	3.2E+7	NA
Pyridine (I)	110861	NA	330 (M)	NA	37,000 (C)	1,100	8,200	40,000	97,000	2.3E+8	37,000 (C)	37,000
Selenium (B)	7782492	410	4,000	400	8.8E+7	NLV	NLV	NLV	NLV	1.3E+8	2.1E+6	NA
Silver (B)	7440224	1,000	4,500	500 (M)	2.3E+8	NLV	NLV	NLV	NLV	6.7E+6	2.0E+6	NA
Silvex (2,4,5-TP)	93721	NA	3,700	NA	2.8E+6	NLV	NLV	NLV	NLV	ID	3.2E+6	NA
Simazine	122349	NA	80	NA	90,000	NLV	NLV	NLV	NLV	ID	2.2E+6	NA
Sodium (B)	7440235	NA	3.2E+6	NA	1.0E+9 (D)	NLV	NLV	NLV	NLV	ID	1.0E+9 (D)	NA
Strontium (B)	7440246	NA	92,000	15,000	1.0E+9 (D)	NLV	NLV	NLV	NLV	ID	2.7E+8	NA
Styrene (I)	100425	NA	2,700	2,200	85,000	2.4E+5	9.4E+5	9.4E+5	1.4E+6	5.3E+9	85,000	5.2E+5

REV. 1
8/99

040282 - 2/10/2006

ATTACHMENT A
SOIL: RESIDENTIAL AND COMMERCIAL I
PART 201 GENERIC CLEANUP CRITERIA AND SCREENING LEVELS

			Groundwater Protection			Indoor Air	Ambient Air (Y)				Direct Contact	
		#10	#11	#12	#13	#14	#15	#16	#17	#18	#19	#20
Chemical	Chemical Abstract Service Number	Statewide Default Background Levels	Drinking Water Protection Criteria	Groundwater Surface Water Interface Protection Criteria	Groundwater Contact Protection Criteria	Soil Volatilization to Indoor Air Inhalation Criteria	Infinite Source Volatile Soil Inhalation Criteria (VSIC)	Finite VSIC for 5 Meter Source Thickness	Finite VSIC for 2 Meter Source Thickness	Particulate Soil Inhalation Criteria	Direct Contact Criteria	Soil Saturation Concentration Screening Levels
Sulfate	14808798	NA	5.0E+6	NA	ID	NLV	NLV	NLV	NLV	ID	ID	NA
Tebuthiuron	34014181	NA	10,000	NA	5.0E+7	NLV	NLV	NLV	NLV	ID	3.0E+7	NA
2,3,7,8-Tetrabromodibenzo-p-dioxin (O)	50585416	NA	NLL	NLL	NLL	NLV	NLV	NLV	NLV	(O)	(O)	NA
1,2,4,5-Tetrachlorobenzene	95943	NA	1.5E+6	IP	1.5E+6	ID	ID	ID	ID	ID	1.4E+8	NA
2,3,7,8-Tetrachlorodibenzo-p-dioxin (O)	1746016	NA	NLL	NLL	NLL	NLV	NLV	NLV	NLV	71	0.09	NA
1,1,1,2-Tetrachloroethane	630206	NA	660	NA	2.2E+5	12,000	57,000	65,000	1.1E+5	4.2E+8	99,000	9.8E+5
1,1,2,2-Tetrachloroethane	79345	NA	86	1,600 (X)	42,000	4,300	10,000	10,000	11,000	5.4E+7	13,000	8.7E+5
Tetrachloroethylene	127184	NA	100	900 (X)	88,000 (C)	11,000	1.8E+5	4.8E+5	1.1E+6	5.4E+9	50,000	88,000
Tetrahydrofuran (I)	109999	NA	4,800	2.2E+5 (X)	7.8E+7	1.3E+6	ID	ID	ID	3.9E+11	3.6E+6	1.2E+8
Thallium (B)	7440280	NA	2,300	4,200 (X)	1.6E+7	NLV	NLV	NLV	NLV	ID	28,000	NA
Toluene (I)	108883	NA	16,000	2,800	2.5E+5 (C)	2.5E+5 (C)	2.8E+6	3.0E+7	3.0E+7	2.7E+10	2.5E+5 (C)	2.5E+5
p-Toluidine	106490	NA	660 (M)	NA	1.3E+5	NLV	NLV	NLV	NLV	1.0E+8	52,000	1.2E+6
Toxaphene	8001352	NA	2,600	860	11,000	NLV	NLV	NLV	NLV	9.7E+6	2,300	NA
Triallate	2303175	NA	95,000	NA	2.5E+5 (C)	ID	ID	ID	ID	ID	2.5E+5 (C)	2.5E+5
Tributylamine	102829	NA	7,800	ID	5.3E+5	5.8E+5	ID	ID	ID	4.7E+8	1.5E+5	3.7E+6
1,2,4-Trichlorobenzene	120821	NA	4,200	1,800	8.9E+5	1.1E+6 (C)	2.8E+7	2.8E+7	2.8E+7	2.5E+10	1.1E+6 (C)	1.1E+6
1,1,1-Trichloroethane	71556	NA	4,000	4,000	4.6E+5 (C)	2.5E+5	3.8E+6	1.4E+7	3.0E+7	6.7E+10	4.6E+5 (C)	4.6E+5
1,1,2-Trichloroethane	79005	NA	100	6,600 (X)	1.9E+5	4,600	17,000	18,000	42,000	1.9E+8	45,000	9.2E+5
Trichloroethylene	79016	NA	100	4,000 (X)	2.2E+5	7,000	78,000	1.5E+5	3.8E+5	1.8E+9	1.6E+5	5.0E+5
Trichlorofluoromethane	75694	NA	52,000	NA	5.6E+5 (C)	5.6E+5 (C)	9.2E+7	1.2E+11	1.2E+11	3.8E+12	5.6E+5 (C)	5.6E+5
2,4,5-Trichlorophenol	95954	NA	1.6E+5	NA	2.9E+7	NLV	NLV	NLV	NLV	2.3E+10	4.2E+7	NA
2,4,6-Trichlorophenol	88062	NA	11,000	700	7.8E+5	NLV	NLV	NLV	NLV	1.0E+9	9.0E+5	NA
1,2,3-Trichloropropane	96184	NA	840	NA	8.3E+5 (C)	ID	ID	ID	ID	ID	8.3E+5 (C)	8.3E+5
1,1,2-Trichloro-1,2,2-trifluoroethane	76131	NA	5.6E+5 (C)	NA	5.6E+5 (C)	5.6E+5 (C)	1.8E+8	8.8E+8	2.1E+9	5.1E+12	5.6E+5 (C)	5.6E+5
Triethanolamine	102716	NA	74,000	NA	1.1E+8 (C)	NLV	NLV	NLV	NLV	3.3E+9	5.5E+7	1.1E+8
3-Trifluoromethyl-4-nitrophenol	88302	NA	1.1E+5	NA	1.1E+8	NLV	NLV	NLV	NLV	ID	2.6E+8	NA
Trifluralin	1582098	NA	5.7E+5	NA	7.8E+6	ID	ID	ID	ID	ID	1.3E+6	NA
2,2,4-Trimethyl pentane	540841	NA	ID	NA	ID	ID	ID	ID	ID	ID	ID	19,000
2,2,4-Trimethyl-2-pentene (I)	107404	NA	ID	NA	ID	ID	ID	ID	ID	ID	ID	56,000
1,2,4-Trimethylbenzene (I)	95636	NA	2,100	ID	1.1E+5 (C)	1.1E+5 (C)	2.1E+7	5.0E+8	5.0E+8	8.2E+10	1.1E+5 (C)	1.1E+5
1,3,5-Trimethylbenzene (I)	108678	NA	1,800	ID	94,000 (C)	94,000 (C)	1.6E+7	3.8E+8	3.8E+8	8.2E+10	94,000 (C)	94,000
Triphenyl phosphate	115866	NA	1.1E+5 (C)	NA	1.1E+5 (C)	ID	ID	ID	ID	ID	1.1E+5 (C)	1.1E+5

040283 - 2/10/2006

ATTACHMENT A
SOIL: RESIDENTIAL AND COMMERCIAL I
PART 201 GENERIC CLEANUP CRITERIA AND SCREENING LEVELS

			Groundwater Protection			Indoor Air	Ambient Air (Y)				Direct Contact	
		#10	#11	#12	#13	#14	#15	#16	#17	#18	#19	#20
Chemical	Chemical Abstract Service Number	Statewide Default Background Levels	Drinking Water Protection Criteria	Groundwater Surface Water Interface Protection Criteria	Groundwater Contact Protection Criteria	Soil Volatilization to Indoor Air Inhalation Criteria	Infinite Source Volatile Soil Inhalation Criteria (VSIC)	Finite VSIC for 5 Meter Source Thickness	Finite VSIC for 2 Meter Source Thickness	Particulate Soil Inhalation Criteria	Direct Contact Criteria	Soil Saturation Concentration Screening Levels
tris(2,3-Dibromopropyl)phosphate	126727	NA	43	NA	27,000 (C)	27,000 (C)	18,000	18,000	18,000	5.9E+6	5,500	27,000
Urea	57136	NA	ID (N)	NA	ID	NLV	NLV	NLV	NLV	ID	ID	NA
Vanadium (B)	7440622	NA	1.0E+6	240	1.0E+9 (D)	NLV	NLV	NLV	NLV	ID	3.7E+6	NA
Vinyl acetate (I)	108054	NA	13,000	NA	2.4E+6 (C)	7.9E+5	1.7E+6	2.6E+6	5.8E+6	1.3E+10	2.4E+6 (C)	2.4E+6
Vinyl chloride	75014	NA	40	300	5,800	28	440	3,100	7,600	3.7E+7	1,200	4.9E+5
White phosphorus (R)	12185103	NA	100 (M)	NA	64,000	NLV	NLV	NLV	NLV	ID	6,300	NA
Xylenes (I)	1330207	NA	5,600	700	1.5E+5 (C)	1.5E+5 (C)	4.6E+7	6.1E+7	1.3E+8	2.9E+11	1.5E+5 (C)	1.5E+5
Zinc (B)	7440666	47,000	2.4E+6	(G)	1.0E+9 (D)	NLV	NLV	NLV	NLV	ID	1.4E+8	NA

REV. 1
8/99

040284 - 2/10/2006

ATTACHMENT A

SOIL: INDUSTRIAL AND COMMERCIAL II, III, AND IV

PART 201 GENERIC CLEANUP CRITERIA AND SCREENING LEVELS

Developed under the authority of the

NATURAL RESOURCES AND ENVIRONMENTAL PROTECTION ACT, 1994 PA 451, AS AMENDED

Industrial and Commercial II, III and IV soil criteria were calculated using currently available toxicological and chemical-speific data. These criteria may change as new data become available. They are not necessarily final cleanup standards. Current criteria are available on the ERD Homepage à www.deq.state.mi.us/erd. Scientific notation is represented by E+ or E- a value, for example 2 x 10^9 is reported as 2.0E+6. Please refer to Operational Memorandum #6 for analytical methods and method detection limits. All values are expressed in units of parts per billion (ug/Kg). Changes made since the last revision of thetables (January 1999) are shaded.

			Groundwater Protection				Indoor Air	Ambient Air (Y)				Direct Contact			
		#10	#21		#12	#13	#22	#23	#24	#25	#26	#27	#28	#29	#20
Chemical	Chemical Abstract Service Number	Statewide Default Background Levels	Residential Drinking Water Protection Criteria	Industrial And Commercial Drinking Water Protection Criteria	Groundwater Surface Water Interface Protection Criteria	Groundwater Contact Protection Criteria	Soil Volatilization to Indoor Air Inhalation Criteria	Infinite Source Volatile Soil Inhalation Criteria (VSIC)	Finite VSIC for 5 Meter Source Thickness	Finite VSIC for 2 Meter Source Thickness	Particulate Soil Inhalation Criteria	Industrial and Commercial II	Commercial III	Commercial IV	Soil Saturation Concentration Screening Levels
Acenaphthene	83329	NA	3.0E+5	8.7E+5	4,300	9.6E+5	3.5E+8	9.7E+7	9.7E+7	9.7E+7	6.2E+9	8.1E+8	1.0E+9 (D)	1.0E+9 (D)	NA
Acenaphthylene	208968	NA	2,900	8,500	ID	4.4E+5	3.0E+6	2.7E+6	2.7E+6	2.7E+6	1.0E+9	1.6E+7	2.3E+7	5.4E+7	NA
Acetaldehyde (I)	75070	NA	19,000	54,000	NA	1.1E+8 (C)	4.0E+5	2.1E+5	2.1E+5	2.9E+5	2.6E+8	9.7E+7	1.1E+8 (C)	1.1E+8 (C)	1.1E+8
Acetic acid (I)	64197	NA	9.0E+5 (M)	9.0E+5 (M)	9.0E+5 (M)	6.5E+8 (C)	NLV	NLV	NLV	NLV	7.4E+9	4.2E+8	5.9E+8	6.5E+8 (C)	6.5E+8
Acetone (I)	67641	NA	15,000	42,000	34,000	1.1E+8 (C)	1.1E+8 (C)	1.6E+8	1.6E+8	2.0E+8	1.7E+11	7.4E+7	1.0E+8	1.1E+8 (C)	1.1E+8
Acetonitrile (I)	75058	NA	2,800	8,000	NA	2.2E+7 (C)	2.2E+7 (C)	1.1E+7	1.1E+7	1.2E+7	1.0E+10	1.4E+7	2.0E+7	2.2E+7 (C)	2.2E+7
Acrolein (I)	107028	NA	2,400	6,600	NA	2.3E+7 (C)	760	370	370	630	5.9E+5	1.2E+7	1.7E+7	2.3E+7 (C)	2.3E+7
Acrylamide	79061	NA	10	16	NA	1.7E+5	NLV	NLV	NLV	NLV	3.0E+6	33,000	47,000	1.1E+5	NA
Acrylic acid (I)	79107	NA	78,000	2.2E+5	NA	1.3E+8 (C)	6.1E+6	2.6E+5	2.7E+5	2.7E+5	2.9E+7	1.3E+8 (C)	1.3E+8 (C)	1.3E+8 (C)	1.3E+8
Acrylonitrile (I)	107131	NA	32	130	98 (X)	1.6E+5	35,000	17,000	17,000	31,000	5.8E+7	46,000	64,000	1.3E+5	8.3E+6
Alachlor	15972608	NA	52	52	290 (X)	ID	NLV	NLV	NLV	NLV	ID	1.9E+6	2.6E+6	6.2E+6	NA
Aldicarb	116063	NA	60	60	NA	2.4E+6	NLV	NLV	NLV	NLV	ID	4.5E+6	6.3E+6	1.5E+7	NA
Aldicarb sulfoxide	1646873	NA	80	80	NA	6.4E+7	NLV	NLV	NLV	NLV	ID	5.9E+6	8.2E+6	1.9E+7	NA
Aldicarb sulfone	1646884	NA	50 (M)	70	NA	5.2E+7	NLV	NLV	NLV	NLV	ID	5.0E+6	7.0E+6	1.6E+7	NA
Aldrin	309002	NA	NLL	NLL	NLL	NLL	7.1E+6	2.0E+5	2.0E+5	2.0E+5	8.0E+5	8,800	12,000	29,000	NA
Aluminum (B)	7429905	6.9E+6	1,000	1,000	NA	1.0E+9 (D)	NLV	NLV	NLV	NLV	ID	3.0E+8	3.0E+8	3.0E+8	NA
Ammonia	7664417	NA	ID (N)	ID (N)	(AC)	ID	ID	ID	ID	ID	2.9E+9	ID	ID	ID	1.0E+7
Aniline (I)	62533	NA	3,000	12,000	IP	4.5E+6 (C)	NLV	NLV	NLV	NLV	2.9E+7	4.5E+6 (C)	4.5E+6 (C)	4.5E+6 (C)	4.5E+6
Anthracene	120127	NA	41,000	41,000	ID	41,000	1.0E+9 (D)	1.6E+9	1.6E+9	1.6E+9	2.9E+10	1.0E+9 (D)	1.0E+9 (D)	1.0E+9 (D)	NA
Antimony (B)	7440360	NA	4,300	4,300	ID	5.4E+7	NLV	NLV	NLV	NLV	1.5E+8	1.6E+6	2.2E+6	5.2E+6	NA
Arsenic (B)	7440382	5,800	23,000	23,000	70,000 (X)	2.2E+6	NLV	NLV	NLV	NLV	9.1E+5	1.0E+5	1.4E+5	3.3E+5	NA
Asbestos	1332214	NA	ID	ID	NA	ID	NLV	NLV	NLV	NLV	1.0E+7 (M)	2.4E+8	3.4E+8	1.0E+9 (D)	ID
Atrazine	1912249	NA	60	60	150 (X)	32,000	NLV	NLV	NLV	NLV	ID	6.8E+5	9.5E+5	2.3E+6	NA
Azobenzene	103333	NA	1,400	5,900	NA	76,000	5.9E+5	ID	ID	ID	1.3E+8	1.4E+6	1.9E+6	4.5E+6	NA
Barium (B)	7440393	75,000	1.3E+6	1.3E+6	1.3E+5	1.0E+9 (D)	NLV	NLV	NLV	NLV	1.5E+8	3.2E+8	4.4E+8	1.0E+9 (D)	NA

REV. 1
8/99

040285 - 2/10/2006

ATTACHMENT A
SOIL: INDUSTRIAL AND COMMERCIAL II, III, AND IV
PART 201 GENERIC CLEANUP CRITERIA AND SCREENING LEVELS

			Groundwater Protection				Indoor Air	Ambient Air (Y)				Direct Contact			
		#10	#21		#12	#13	#22	#23	#24	#25	#26	#27	#28	#29	#20
Chemical	Chemical Abstract Service Number	Statewide Default Background Levels	Residential Drinking Water Protection Criteria	Industrial And Commercial Drinking Water Protection Criteria	Groundwater Surface Water Interface Protection Criteria	Groundwater Contact Protection Criteria	Soil Volatilization to Indoor Air Inhalation Criteria	Infinite Source Volatile Soil Inhalation Criteria (VSIC)	Finite VSIC for 5 Meter Source Thickness	Finite VSIC for 2 Meter Source Thickness	Particulate Soil Inhalation Criteria	Industrial and Commercial II	Commercial III	Commercial IV	Soil Saturation Concentration Screening Levels
Benzene (I)	71432	NA	100	100	4,000 (X)	1.9E+5	8,400	45,000	99,000	2.3E+5	4.7E+8	4.0E+5 (C)	4.0E+5 (C)	4.0E+5 (C)	4.0E+5
Benzidine	92875	NA	1,000 (M)	1,000 (M)	ID	1,000 (M)	NLV	NLV	NLV	NLV	59,000	1,000 (M)	1,000 (M)	2,100	NA
Benzo(a)anthracene (Q)	56553	NA	NLL	NLL	NLL	NLL	NLV	NLV	NLV	NLV	ID	2.1E+5	2.9E+5	6.8E+5	NA
Benzo(b)fluoranthene (Q)	205992	NA	NLL	NLL	NLL	NLL	ID	ID	ID	ID	ID	2.1E+5	2.9E+5	6.8E+5	NA
Benzo(k)fluoranthene (Q)	207089	NA	NLL	NLL	NLL	NLL	NLV	NLV	NLV	NLV	ID	2.1E+6	2.9E+6	6.8E+6	NA
Benzo(g,h,i)perylene	191242	NA	NLL	NLL	NLL	NLL	NLV	NLV	NLV	NLV	3.5E+8	1.6E+7	2.3E+7	5.4E+7	NA
Benzo(a)pyrene (Q)	50328	NA	NLL	NLL	NLL	NLL	NLV	NLV	NLV	NLV	1.9E+6	21,000	29,000	68,000	NA
Benzoic acid	65850	NA	6.4E+5	1.8E+6	NA	7.0E+7	NLV	NLV	NLV	NLV	ID	1.0E+9 (D)	1.0E+9 (D)	1.0E+9 (D)	NA
Benzyl alcohol	100516	NA	2.0E+5	5.8E+5	NA	5.8E+6 (C)	NLV	NLV	NLV	NLV	1.5E+11	5.8E+6 (C)	5.8E+6 (C)	5.8E+6 (C)	5.8E+6
Benzyl chloride	100447	NA	100	400	NA	40,000	33,000	48,000	48,000	52,000	7.8E+7	1.5E+5	2.0E+5	2.3E+5 (C)	2.3E+5
Beryllium (B)	7440417	NA	51,000	51,000	(G)	1.0E+9	NLV	NLV	NLV	NLV	1.6E+6	2.3E+7	3.2E+7	7.4E+7	NA
bis(2-chloroethoxy)ethane	112265	NA	ID	ID	NA	ID	NLV	NLV	NLV	NLV	ID	ID	ID	ID	2.7E+6
bis(2-Chloroethyl)ether (I)	111444	NA	330 (M)	330 (M)	NA	42,000	44,000	13,000	13,000	13,000	1.2E+7	23,000	32,000	63,000	2.2E+6
bis(2-Ethylhexyl)phthalate	117817	NA	NLL	NLL	NLL	NLL	NLV	NLV	NLV	NLV	8.9E+8	1.0E+7 (C)	1.0E+7 (C)	1.0E+7 (C)	1.0E+7
Boron (B)	7440428	NA	10,000	10,000	38,000	2.6E+8	NLV	NLV	NLV	NLV	ID	2.7E+8	2.7E+8	2.1E+8	NA
Bromobenzene (I)	108861	NA	530	1,500	NA	3.0E+5	5.8E+5	5.4E+5	5.4E+5	5.4E+5	2.4E+8	7.6E+5 (C)	7.6E+5 (C)	7.6E+5 (C)	7.6E+5
Bromodichloromethane	75274	NA	2,000 (W)	2,000 (W)	ID	2.2E+5	6,400	31,000	31,000	57,000	1.1E+8	4.0E+5	5.6E+5	1.1E+6	1.5E+6
Bromoform	75252	NA	2,000 (W)	2,000 (W)	NA	8.7E+5 (C)	7.7E+5	3.1E+6	3.1E+6	3.1E+6	3.6E+9	8.7E+5 (C)	8.7E+5 (C)	8.7E+5 (C)	8.7E+5
Bromomethane	74839	NA	200	580	700	1.3E+6	1,600	13,000	57,000	1.4E+5	1.5E+8	1.0E+6	1.5E+6	2.2E+6 (C)	2.2E+6
n-Butanol (I)	71363	NA	19,000	54,000	NA	8.7E+6 (C)	NLV	NLV	NLV	NLV	1.0E+10	8.7E+6 (C)	8.7E+6 (C)	8.7E+6 (C)	8.7E+6
2-Butanone (MEK) (I)	78933	NA	2.6E+5	7.6E+5	44,000	2.7E+7 (C)	2.7E+7 (C)	3.5E+7	3.5E+7	3.6E+7	2.9E+10	2.7E+7 (C)	2.7E+7 (C)	2.7E+7 (C)	2.7E+7
n-Butyl acetate (I)	123864	NA	11,000	32,000	NA	1.1E+6 (C)	1.1E+6 (C)	ID	ID	ID	2.8E+10	1.1E+6 (C)	1.1E+6 (C)	1.1E+6 (C)	1.1E+6
t-Butyl alcohol (I)	75650	NA	78,000	2.2E+5	NA	1.1E+8 (C)	1.1E+8 (C)	ID	ID	ID	8.8E+10	1.1E+8 (C)	1.1E+8 (C)	1.1E+8 (C)	1.1E+8
Butyl benzyl phthalate	85687	NA	3.1E+5 (C)	3.1E+5 (C)	26,000 (X)	3.1E+5 (C)	NLV	NLV	NLV	NLV	2.1E+10	3.1E+5 (C)	3.1E+5 (C)	3.1E+5 (C)	3.1E+5
n-Butylbenzene	104518	NA	1,600	4,600	NA	ID	ID	ID	ID	ID	ID	8.2E+6	1.0E+7 (C)	1.0E+7 (C)	1.0E+7
sec-Butylbenzene	135988	NA	1,600	4,600	NA	ID	ID	ID	ID	ID	ID	8.2E+6	1.0E+7 (C)	1.0E+7 (C)	1.0E+7
tert-Butylbenzene (I)	98066	NA	1,600	4,600	NA	ID	ID	ID	ID	ID	ID	8.2E+6	1.0E+7 (C)	1.0E+7 (C)	1.0E+7
Cadmium (B)	7440439	1,200	6,000	6,000	(G,X)	2.5E+8	NLV	NLV	NLV	NLV	2.2E+6	4.5E+6	8.3E+6	1.5E+7	NA
Camphene (I)	79925	NA	ID	ID	NA	ID	ID	ID	ID	ID	ID	ID	ID	ID	NA
Caprolactam	105602	NA	1.2E+5	3.4E+5	NA	1.0E+9 (D)	NLV	NLV	NLV	NLV	2.9E+8	1.0E+9 (D)	1.0E+9 (D)	1.0E+9 (D)	NA
Carbaryl	63252	NA	14,000	40,000	NA	2.6E+6	ID	ID	ID	ID	ID	4.3E+8	6.1E+8	1.0E+9 (D)	NA
Carbazole	86748	NA	860	19,000	330 (M)	3.2E+5	NLV	NLV	NLV	NLV	ID	1.2E+6	1.7E+6	3.5E+6	NA

040286 - 2/10/2006

ATTACHMENT A
SOIL: INDUSTRIAL AND COMMERCIAL II, III, AND IV
PART 201 GENERIC CLEANUP CRITERIA AND SCREENING LEVELS

			Groundwater Protection				Indoor Air	Ambient Air (Y)				Direct Contact			
		#10	#21		#12	#13	#22	#23	#24	#25	#26	#27	#28	#29	#20
Chemical	Chemical Abstract Service Number	Statewide Default Background Levels	Residential Drinking Water Protection Criteria	Industrial And Commercial Drinking Water Protection Criteria	Groundwater Surface Water Interface Protection Criteria	Groundwater Contact Protection Criteria	Soil Volatilization to Indoor Air Inhalation Criteria	Infinite Source Volatile Soil Inhalation Criteria (VSIC)	Finite VSIC for 5 Meter Source Thickness	Finite VSIC for 2 Meter Source Thickness	Particulate Soil Inhalation Criteria	Industrial and Commercial II	Commercial III	Commercial IV	Soil Saturation Concentration Screening Levels
Carbofuran	1563662	NA	800	800	NA	6.6E+6	NLV	NLV	NLV	NLV	ID	3.7E+6	5.2E+6	1.0E+7	NA
Carbon disulfide (I,R)	75150	NA	16,000	46,000	ID	2.8E+5 (C)	1.4E+5	1.6E+6	8.0E+6	1.9E+7	2.1E+10	2.8E+5 (C)	2.8E+5 (C)	2.8E+5 (C)	2.8E+5
Carbon tetrachloride	56235	NA	100	100	900 (X)	32,000	990	12,000	34,000	79,000	1.7E+8	1.9E+5	2.7E+5	3.9E+5 (C)	3.9E+5
Chlordane (J)	57749	NA	NLL	NLL	NLL	NLL	5.9E+7	4.2E+6	4.2E+6	4.2E+6	2.1E+7	1.7E+5	2.4E+5	4.8E+5	NA
Chloride (B)	16887006	NA	5.0E+6	5.0E+6	NA	ID	NLV	NLV	NLV	NLV	ID	5.0E+5 (F)	5.0E+5 (F)	5.0E+5 (F)	NA
Chlorobenzene (I)	108907	NA	2,000	2,000	940	2.6E+5 (C)	2.2E+5	9.2E+5	1.1E+6	2.1E+6	2.1E+9	2.6E+5 (C)	2.6E+5 (C)	2.6E+5 (C)	2.6E+5
Chloroethane (I)	75003	NA	4,400	18,000	ID	9.7E+5 (C)	9.7E+5 (C)	3.6E+7	1.2E+8	2.8E+8	2.9E+11	9.7E+5 (C)	9.7E+5 (C)	9.7E+5 (C)	9.7E+5
2-Chloroethyl vinyl ether	110758	NA	ID	ID	NA	ID	ID	ID	ID	ID	ID	ID	ID	ID	1.9E+6
Chloroform	67663	NA	2,000 (W)	2,000 (W)	3,400 (X)	1.5E+6 (C)	38,000	1.5E+5	3.4E+5	7.9E+5	1.6E+9	1.5E+6 (C)	1.5E+6 (C)	1.5E+6 (C)	1.5E+6
Chloromethane (I)	74873	NA	1,300	5,400	ID	1.1E+6 (C)	12,000	1.4E+5	1.2E+6	2.9E+6	6.1E+9	1.1E+6 (C)	1.1E+6 (C)	1.1E+6 (C)	1.1E+6
4-Chloro-3-methylphenol	59507	NA	5,600	16,000	NA	2.4E+6	NLV	NLV	NLV	NLV	ID	1.5E+7	2.1E+7	4.1E+7	NA
beta-Chloronaphthalene	91587	NA	6.5E+5	1.8E+6	NA	2.3E+6	ID	ID	ID	ID	ID	1.9E+8	2.6E+8	5.2E+8	NA
2-Chlorophenol	95578	NA	900	2,600	440	1.6E+6	ID	ID	ID	ID	ID	4.6E+6	6.5E+6	8.1E+6 (C)	8.1E+6
o-Chlorotoluene (I)	95498	NA	3,300	9,300	NA	5.0E+5 (C)	5.0E+5 (C)	ID	ID	ID	7.6E+10	5.0E+5 (C)	5.0E+5 (C)	5.0E+5 (C)	5.0E+5
Chlorpyrifos	2921882	NA	17,000	48,000	NA	8.4E+5	ID	ID	ID	ID	5.9E+7	1.4E+7	1.9E+7	4.5E+7	NA
Chromium (III) (B,H)	16065831	18,000 (total)	1.0E+9 (D)	1.0E+9 (D)	(G,X)	1.0E+9 (D)	NLV	NLV	NLV	NLV	1.5E+8	1.0E+9 (D)	1.0E+9 (D)	1.0E+9 (D)	NA
Chromium (VI) (B,H)	18540299	18,000 (total)	30,000	30,000	3,300	3.0E+8	NLV	NLV	NLV	NLV	3.3E+5	2.2E+7	3.0E+7	7.1E+7	NA
Chrysene (Q)	218019	NA	NLL	NLL	NLL	NLL	ID	ID	ID	ID	ID	2.1E+7	2.9E+7	6.8E+7	NA
Cobalt (B)	7440484	6,800	1,000	2,000	2,000	2.2E+7	NLV	NLV	NLV	NLV	5.9E+6	2.3E+7	3.2E+7	7.4E+7	NA
Copper (B)	7440508	32,000	1.6E+8	1.6E+8	(G)	1.0E+9 (D)	NLV	NLV	NLV	NLV	5.9E+7	1.7E+8	2.4E+8	5.6E+8	NA
Cyanazine	21725462	NA	500 (M)	500 (M)	1,100 (X)	34,000	NLV	NLV	NLV	NLV	ID	2.6E+5	3.6E+5	8.5E+5	NA
Cyanide (R)	57125	NA	4,000	4,000	400	2.5E+5 (P)	NLV	NLV	NLV	NLV	2.5E+5 (P)	2.5E+5 (P)	2.5E+5 (P)	2.5E+5 (P)	NA
Cyclohexanone (I)	108941	NA	5.2E+6	1.5E+7	NA	2.2E+8 (C)	32,000	ID	ID	ID	2.9E+10	2.2E+8 (C)	2.2E+8 (C)	2.2E+8 (C)	2.2E+8
Dacthal	1861321	NA	50,000	1.4E+5	NA	3.4E+5	NLV	NLV	NLV	NLV	ID	4.5E+7	6.3E+7	1.5E+8	NA
Dalapon	75990	NA	4,000	4,000	NA	5.9E+7 (C)	NLV	NLV	NLV	NLV	ID	5.9E+7 (C)	5.9E+7 (C)	5.9E+7 (C)	5.9E+7
4-4'-DDD	72548	NA	NLL	NLL	NLL	NLL	NLV	NLV	NLV	NLV	ID	6.3E+5	8.8E+5	2.1E+6	NA
4-4'-DDE	72559	NA	NLL	NLL	NLL	NLL	ID	ID	ID	ID	ID	4.4E+5	6.2E+5	1.5E+6	NA
4-4'-DDT	50293	NA	NLL	NLL	NLL	NLL	NLV	NLV	NLV	NLV	4.0E+7	4.4E+5	6.2E+5	1.5E+6	NA
Decabromodiphenyl ether	1163195	NA	1.4E+5	1.4E+5	NA	1.4E+5	1.0E+9 (D)	ID	ID	ID	1.0E+9	4.5E+7	6.3E+7	1.5E+8	NA
Di-n-butyl phthalate	84742	NA	7.6E+5 (C)	7.6E+5 (C)	11,000	7.6E+5 (C)	NLV	NLV	NLV	NLV	1.5E+9	7.6E+5 (C)	7.6E+5 (C)	7.6E+5 (C)	7.6E+5
Di(2-ethylhexyl) adipate	103231	NA	9.6E+5 (C)	9.6E+5 (C)	NA	9.6E+5 (C)	NLV	NLV	NLV	NLV	ID	9.6E+5 (C)	9.6E+5 (C)	9.6E+5 (C)	9.6E+5
Di-n-octyl phthalate	117840	NA	1.0E+8	1.4E+8 (C)	ID	1.4E+8 (C)	NLV	NLV	NLV	NLV	ID	8.1E+7	1.1E+8	1.4E+8 (C)	1.4E+8

040287 - 2/10/2006

ATTACHMENT A
SOIL: INDUSTRIAL AND COMMERCIAL II, III, AND IV
PART 201 GENERIC CLEANUP CRITERIA AND SCREENING LEVELS

			Groundwater Protection				Indoor Air	Ambient Air (Y)				Direct Contact			
		#10	#21		#12	#13	#22	#23	#24	#25	#26	#27	#28	#29	#20
Chemical	Chemical Abstract Service Number	Statewide Default Background Levels	Residential Drinking Water Protection Criteria	Industrial And Commercial Drinking Water Protection Criteria	Groundwater Surface Water Interface Protection Criteria	Groundwater Contact Protection Criteria	Soil Volatilization to Indoor Air Inhalation Criteria	Infinite Source Volatile Soil Inhalation Criteria (VSIC)	Finite VSIC for 5 Meter Source Thickness	Finite VSIC for 2 Meter Source Thickness	Particulate Soil Inhalation Criteria	Industrial and Commercial II	Commercial III	Commercial IV	Soil Saturation Concentration Screening Levels
Diacetone alcohol (I)	123422	NA	ID	ID	NA	ID	NLV	NLV	NLV	NLV	7.1E+10	ID	ID	ID	1.1E+8
Diazinon	333415	NA	95	280	NA	80,000	NLV	NLV	NLV	NLV	ID	3.1E+5 (C)	3.1E+5 (C)	3.1E+5 (C)	3.1E+5
Dibenzo(a,h)anthracene (Q)	53703	NA	NLL	NLL	NLL	NLL	NLV	NLV	NLV	NLV	ID	21,000	29,000	68,000	NA
Dibenzofuran	132649	NA	ID	ID	1,700	ID	ID	ID	ID	ID	ID	ID	ID	ID	NA
Dibromochloromethane	124481	NA	2,000 (W)	2,000 (W)	ID	1.9E+5	21,000	80,000	80,000	98,000	1.6E+8	3.0E+5	4.1E+5	6.1E+5 (C)	6.1E+5
Dibromochloropropane	96128	NA	4.0	4.0	NA	1,200 (C)	1,200 (C)	1,200 (C)	1,200 (C)	1,200 (C)	1,200 (C)	1,200 (C)	1,200 (C)	1,200 (C)	1,200
Dibromomethane	74953	NA	1,600	4,600	NA	1.9E+6	ID	ID	ID	ID	ID	2.0E+6 (C)	2.0E+6 (C)	2.0E+6 (C)	2.0E+6
1,2-Dichlorobenzene	95501	NA	13,000	13,000	340	2.1E+5 (C)	2.1E+5 (C)	4.6E+7	4.6E+7	5.5E+7	4.4E+10	2.1E+5 (C)	2.1E+5 (C)	2.1E+5 (C)	2.1E+5
1,3-Dichlorobenzene	541731	NA	17,000	18,000	1,100	2.0E+5 (C)	ID	ID	ID	ID	ID	2.0E+5 (C)	2.0E+5 (C)	2.0E+5 (C)	2.0E+5
1,4-Dichlorobenzene	106467	NA	1,600	1,700	280	60,000	1.0E+5	2.6E+5	2.6E+5	3.4E+5	5.7E+8	1.0E+6	1.4E+6	2.9E+6	NA
3,3'-Dichlorobenzidine	91941	NA	2,000 (M)	2,000 (M)	2,000 (M,X)	6,900	NLV	NLV	NLV	NLV	8.2E+6	55,000	77,000	1.5E+5	NA
Dichlorodifluoromethane	75718	NA	93,000	2.7E+5	ID	1.0E+6 (C)	1.0E+6 (C)	6.3E+7	5.5E+8	1.4E+9	1.5E+12	1.0E+6 (C)	1.0E+6 (C)	1.0E+6 (C)	1.0E+6
1,1-Dichloroethane (I)	75343	NA	18,000	50,000	IP	7.9E+5 (C)	7.9E+5 (C)	3.6E+7	9.7E+7	2.3E+8	2.4E+11	7.9E+5 (C)	7.9E+5 (C)	7.9E+5 (C)	7.9E+5
1,2-Dichloroethane (I)	107062	NA	100	100	7,200 (X)	2.2E+5	11,000	21,000	33,000	74,000	1.5E+8	2.7E+5	3.8E+5	7.6E+5	1.2E+6
1,1-Dichloroethylene (I)	75354	NA	140	140	1,300 (X)	1.8E+5	330	3,700	15,000	37,000	7.8E+7	5.8E+5 (C)	5.8E+5 (C)	5.8E+5 (C)	5.8E+5
cis-1,2-Dichloroethylene (I)	156592	NA	1,400	1,400	ID	6.4E+5 (C)	6.4E+5 (C)	4.7E+7	9.8E+7	2.3E+8	2.3E+11	6.4E+5 (C)	6.4E+5 (C)	6.4E+5 (C)	6.4E+5
trans-1,2-Dichloroethylene	156605	NA	2,000	2,000	ID	1.4E+6 (C)	1.4E+6 (C)	3.7E+7	9.6E+7	2.2E+8	2.3E+11	1.4E+6 (C)	1.4E+6 (C)	1.4E+6 (C)	1.4E+6
2,6-Dichloro-4-nitroaniline	99309	NA	44,000	1.3E+5	NA	1.4E+5	NLV	NLV	NLV	NLV	ID	1.0E+9 (D)	1.0E+9 (D)	1.0E+9 (D)	NA
2,4-Dichlorophenol	120832	NA	2,600	7,700	680	1.5E+6	NLV	NLV	NLV	NLV	2.3E+9	1.0E+7 (C)	1.0E+7 (C)	1.0E+7 (C)	1.0E+7
2,4-Dichlorophenoxyacetic acid	94757	NA	1,400	1,400	4,400	2.2E+6	NLV	NLV	NLV	NLV	2.9E+9	4.5E+7	6.3E+7	1.5E+8	NA
1,2-Dichloropropane (I)	78875	NA	100	100	5,800 (X)	1.5E+5	7,400	30,000	51,000	1.2E+5	1.2E+8	3.6E+5	5.1E+5	5.5E+5 (C)	5.5E+5
1,3-Dichloropropene (I,J)	542756	NA	94	380	NA	52,000	420	4,600	15,000	36,000	7.5E+7	1.4E+5	1.9E+5	3.8E+5	6.2E+5
Dichlorovos	62737	NA	58	240	NA	2.2E+5	NLV	NLV	NLV	NLV	1.5E+7	5.2E+5	7.2E+5	1.7E+6	2.5E+6
Dicyclohexyl phthalate	84617	NA	ID	ID	NA	ID	ID	ID	ID	ID	ID	ID	ID	ID	NA
Dieldrin	60571	NA	NLL	NLL	NLL	NLL	7.3E+5	64,000	64,000	64,000	8.5E+5	9,400	13,000	31,000	NA
Diethyl ether (I)	60297	NA	100 (M)	100 (M)	ID	7.4E+6 (C)	7.4E+6 (C)	1.0E+8	1.6E+8	3.5E+8	3.5E+11	7.4E+6 (C)	7.4E+6 (C)	7.4E+6 (C)	7.4E+6
Diethyl phthalate	84662	NA	1.1E+5	3.2E+5	NA	7.4E+5 (C)	NLV	NLV	NLV	NLV	1.5E+9	7.4E+5 (C)	7.4E+5 (C)	7.4E+5 (C)	7.4E+5
Diethylene glycol monobutyl ether	112345	NA	1,800	5,000	NA	8.6E+7	NLV	NLV	NLV	NLV	5.9E+8	5.4E+7	7.6E+7	1.1E+8 (C)	1.1E+8
Diisopropylamine (I)	108189	NA	110	320	NA	3.8E+5	ID	ID	ID	ID	ID	5.7E+5	8.0E+5	1.6E+6	6.7E+6
Dimethyl phthalate	131113	NA	7.9E+5 (C)	7.9E+5 (C)	NA	7.9E+5 (C)	NLV	NLV	NLV	NLV	1.5E+9	7.9E+5 (C)	7.9E+5 (C)	7.9E+5 (C)	7.9E+5
N,N-Dimethylacetamide	127195	NA	3,600	10,000	82,000 (X)	1.1E+8 (C)	NLV	NLV	NLV	NLV	ID	1.9E+7	2.6E+7	5.2E+7	1.1E+8
N,N-Dimethylaniline	121697	NA	320	920	NA	3.2E+5	8.0E+5 (C)	ID	ID	ID	3.3E+8	8.0E+5 (C)	8.0E+5 (C)	8.0E+5 (C)	8.0E+5

040288 - 2/10/2006

ATTACHMENT A
SOIL: INDUSTRIAL AND COMMERCIAL II, III, AND IV
PART 201 GENERIC CLEANUP CRITERIA AND SCREENING LEVELS

			Groundwater Protection				Indoor Air	Ambient Air (Y)				Direct Contact			
		#10	#21		#12	#13	#22	#23	#24	#25	#26	#27	#28	#29	#20
Chemical	Chemical Abstract Service Number	Statewide Default Background Levels	Residential Drinking Water Protection Criteria	Industrial And Commercial Drinking Water Protection Criteria	Groundwater Surface Water Interface Protection Criteria	Groundwater Contact Protection Criteria	Soil Volatilization to Indoor Air Inhalation Criteria	Infinite Source Volatile Soil Inhalation Criteria (VSIC)	Finite VSIC for 5 Meter Source Thickness	Finite VSIC for 2 Meter Source Thickness	Particulate Soil Inhalation Criteria	Industrial and Commercial II	Commercial III	Commercial IV	Soil Saturation Concentration Screening Levels
Dimethylformamide (I)	68122	NA	14,000	40,000	NA	1.1E+8 (C)	NLV	NLV	NLV	NLV	8.8E+8	7.1E+7	1.0E+8	1.1E+8 (C)	1.1E+8
2,4-Dimethylphenol	105679	NA	7,400	20,000	330 (M)	8.8E+6	NLV	NLV	NLV	NLV	2.1E+9	2.3E+8	3.2E+8	7.4E+8	NA
2,6-Dimethylphenol	576261	NA	330 (M)	330 (M)	NA	1.1E+5	NLV	NLV	NLV	NLV	ID	2.7E+6	3.8E+6	8.9E+6	NA
3,4-Dimethylphenol	95658	NA	330 (M)	580	NA	3.0E+5	NLV	NLV	NLV	NLV	ID	6.3E+6	8.8E+6	2.1E+7	NA
Dimethylsulfoxide	67685	NA	4.4E+6	1.3E+7	3.8E+6	1.8E+7 (C)	NLV	NLV	NLV	NLV	ID	1.8E+7 (C)	1.8E+7 (C)	1.8E+7 (C)	1.8E+7
2,4-Dinitrotoluene	121142	NA	15,000	15,000	NA	3.8E+6	NLV	NLV	NLV	NLV	2.0E+7	2.2E+5	3.1E+5	7.3E+5	NA
Dinoseb	88857	NA	290	300	NA	1.4E+5 (C)	ID	ID	ID	ID	ID	1.4E+5 (C)	1.4E+5 (C)	1.4E+5 (C)	1.4E+5
1,4-Dioxane (I)	123911	NA	1,500	6,400	56,000 (X)	3.4E+7	NLV	NLV	NLV	NLV	7.1E+8	2.3E+6	3.2E+6	6.3E+6	9.7E+7
Diquat	85007	NA	400	400	NA	1.4E+7	NLV	NLV	NLV	NLV	ID	9.9E+6	1.4E+7	3.3E+7	NA
Diuron	330541	NA	620	1,800	NA	7.5E+5	NLV	NLV	NLV	NLV	ID	1.9E+7	2.7E+7	6.4E+7	NA
Endosulfan (J)	115297	NA	NLL	NLL	NLL	NLL	ID	ID	ID	ID	ID	1.0E+6	1.5E+6	3.4E+6	NA
Endothall	145733	NA	NLL	NLL	NLL	NLL	NLV	NLV	NLV	NLV	1.0E+9	7.7E+7	1.1E+8	2.5E+8	NA
Endrin	72208	NA	NLL	NLL	NLL	NLL	NLV	NLV	NLV	NLV	ID	7.7E+5	1.1E+6	2.5E+6	NA
Epichlorohydrin (I)	106898	NA	1,700	7,000	NA	7.3E+6 (C)	1.2E+5	37,000	37,000	37,000	2.9E+7	2.5E+6	3.5E+6	7.0E+6	7.3E+6
Ethanol (I)	64175	NA	3.8E+7	7.6E+7	IP	1.1E+8 (C)	NLV	NLV	NLV	NLV	5.6E+11	1.1E+8 (C)	1.1E+8 (C)	1.1E+8 (C)	1.1E+8
Ethyl acetate (I)	141786	NA	1.3E+5	3.8E+5	NA	7.5E+6 (C)	7.5E+6 (C)	5.9E+7	5.9E+7	1.0E+8	9.4E+10	7.5E+6 (C)	7.5E+6 (C)	7.5E+6 (C)	7.5E+6
Ethylbenzene (I)	100414	NA	1,500	1,500	360	1.4E+5 (C)	1.4E+5 (C)	1.1E+7	1.4E+7	3.0E+7	2.9E+10	1.4E+5 (C)	1.4E+5 (C)	1.4E+5 (C)	1.4E+5
Ethylene dibromide	106934	NA	10 (M)	10 (M)	NA	320	3,600	5,800	5,800	9,800	1.8E+7	290	410	810	8.9E+5
Ethylene glycol	107211	NA	3.0E+5	8.4E+5	NA	1.1E+8 (C)	NLV	NLV	NLV	NLV	3.7E+10	1.1E+8 (C)	1.1E+8 (C)	1.1E+8 (C)	1.1E+8
Ethylene glycol monobutyl ether	111762	NA	3,900	11,000	NA	4.1E+7 (C)	ID	3.9E+5	2.7E+6	6.6E+6	7.1E+9	2.0E+7	2.8E+7	4.1E+7 (C)	4.1E+7
Fluoranthene	206440	NA	7.2E+5	7.2E+5	5,500	7.2E+5	1.0E+9 (D)	8.8E+8	8.8E+8	8.8E+8	4.1E+9	5.4E+8	7.6E+8	1.0E+9 (D)	NA
Fluorene	86737	NA	3.9E+5	8.9E+5	2,400	8.9E+5	1.0E+9 (D)	1.5E+8	1.5E+8	1.5E+8	4.1E+9	5.4E+8	7.6E+8	1.0E+9 (D)	NA
Fluorine (soluble fluoride) (B)	7782414	NA	40,000	40,000	NA	2.6E+8	NLV	NLV	NLV	NLV	ID	2.7E+8	3.8E+8	8.9E+8	NA
Formaldehyde	50000	NA	26,000	76,000	2,400	6.0E+7 (C)	65,000	43,000	69,000	1.5E+5	3.0E+8	6.0E+7 (C)	6.0E+7 (C)	6.0E+7 (C)	6.0E+7
Formic acid (I,U)	64186	NA	9.0E+5 (M)	9.0E+5 (M)	ID	1.1E+8 (C)	2.8E+6	9.0E+5 (M)	9.0E+5 (M)	9.0E+5 (M)	5.9E+7	1.1E+8 (C)	1.1E+8 (C)	1.1E+8 (C)	1.1E+8
1-Formylpiperidine	2591868	NA	1,600	4,600	NA	ID	ID	ID	ID	ID	ID	8.2E+6	1.0E+7 (C)	1.0E+7 (C)	1.0E+7
Gentian violet	548629	NA	170	700	NA	9.8E+6	NLV	NLV	NLV	NLV	ID	1.5E+6	2.1E+6	5.0E+6	NA
Glyphosate	1071836	NA	NLL	NLL	NLL	NLL	NLV	NLV	NLV	NLV	ID	4.5E+8	6.3E+8	1.0E+9 (D)	NA
Heptachlor	76448	NA	NLL	NLL	NLL	NLL	1.9E+6	2.1E+5	2.1E+5	2.1E+5	3.0E+6	33,000	47,000	1.1E+5	NA
Heptachlor epoxide	1024573	NA	NLL	NLL	NLL	NLL	NLV	NLV	NLV	NLV	1.5E+6	16,000	23,000	54,000	NA
n-Heptane (I)	142825	NA	2.4E+5 (C)	2.4E+5 (C)	NA	2.4E+5 (C)	2.4E+5 (C)	ID	ID	ID	1.0E+11	2.4E+5 (C)	2.4E+5 (C)	2.4E+5 (C)	2.4E+5
Hexabromobenzene	87821	NA	5,400	5,400	ID	1.0E+7	ID	ID	ID	ID	ID	1.3E+7	1.8E+7	4.2E+7	NA

040289 - 2/10/2006

ATTACHMENT A
SOIL: INDUSTRIAL AND COMMERCIAL II, III, AND IV
PART 201 GENERIC CLEANUP CRITERIA AND SCREENING LEVELS

			Groundwater Protection				Indoor Air	Ambient Air (Y)				Direct Contact			
		#10	#21		#12	#13	#22	#23	#24	#25	#26	#27	#28	#29	#20
Chemical	Chemical Abstract Service Number	Statewide Default Background Levels	Residential Drinking Water Protection Criteria	Industrial And Commercial Drinking Water Protection Criteria	Groundwater Surface Water Interface Protection Criteria	Groundwater Contact Protection Criteria	Soil Volatilization to Indoor Air Inhalation Criteria	Infinite Source Volatile Soil Inhalation Criteria (VSIC)	Finite VSIC for 5 Meter Source Thickness	Finite VSIC for 2 Meter Source Thickness	Particulate Soil Inhalation Criteria	Industrial and Commercial II	Commercial III	Commercial IV	Soil Saturation Concentration Screening Levels
Hexachlorobenzene (C-66)	118741	NA	1,800	1,800	ID	3,500	2.2E+5	56,000	56,000	56,000	8.5E+6	94,000	1.3E+5	3.1E+5	NA
Hexachlorobutadiene (C-46)	87683	NA	19,000	77,000	ID	3.4E+5	3.5E+5 (C)	4.6E+5	4.6E+5	4.6E+5	1.8E+8	3.5E+5 (C)	3.5E+5 (C)	3.5E+5 (C)	3.5E+5
alpha-Hexachlorocyclohexane	319846	NA	25	98	NA	2,800	6.8E+5	86,000	86,000	86,000	2.1E+6	24,000	33,000	79,000	NA
beta-Hexachlorocyclohexane	319857	NA	85	350	NA	10,000	NLV	NLV	NLV	NLV	7.4E+6	83,000	1.2E+5	2.8E+5	NA
Hexachlorocyclopentadiene (C-56)	77474	NA	36,000	36,000	ID	81,000 (C)	ID	ID	ID	ID	ID	81,000 (C)	81,000 (C)	81,000 (C)	81,000
Hexachloroethane	67721	NA	17,000	69,000	1,800 (X)	4.1E+5	3.7E+5	1.4E+6	1.4E+6	1.4E+6	1.0E+8	1.8E+6	2.5E+6	4.9E+6	NA
n-Hexane (I)	110543	NA	44,000 (C)	44,000 (C)	NA	ID	44,000 (C)	ID	ID	ID	5.9E+9	44,000 (C)	44,000 (C)	44,000 (C)	44,000
2-Hexanone (I)	591786	NA	20,000	58,000	NA	2.5E+6 (C)	1.8E+6	ID	ID	ID	1.2E+9	2.5E+6 (C)	2.5E+6 (C)	2.5E+6 (C)	2.5E+6
Indeno(1,2,3-cd)pyrene (Q)	193395	NA	NLL	NLL	NLL	NLL	NLV	NLV	NLV	NLV	ID	2.1E+5	2.9E+5	6.8E+5	NA
Iron (B)	7439896	1.2E+7	6,000	6,000	NA	ID	NLV	NLV	NLV	NLV	ID	ID	ID	ID	NA
Isobutyl alcohol (I)	78831	NA	46,000	1.3E+5	NA	8.9E+6 (C)	8.9E+6 (C)	9.5E+7	9.5E+7	9.5E+7	4.4E+10	8.9E+6 (C)	8.9E+6 (C)	8.9E+6 (C)	8.9E+6
Isophorone	78591	NA	18,000	74,000	11,000 (X)	2.4E+6 (C)	NLV	NLV	NLV	NLV	8.2E+9	2.4E+6 (C)	2.4E+6 (C)	2.4E+6 (C)	2.4E+6
Isopropyl alcohol (I)	67630	NA	9,400	26,000	NA	1.1E+8 (C)	NLV	NLV	NLV	NLV	6.5E+9	4.8E+7	6.7E+7	1.1E+8 (C)	1.1E+8
Isopropyl benzene (I)	98828	NA	90,000	2.6E+5	ID	3.9E+5 (C)	3.9E+5 (C)	2.0E+6	ID	ID	2.6E+9	3.9E+5 (C)	3.9E+5 (C)	3.9E+5 (C)	3.9E+5
Lead (B)	7439921	21,000	1,000 (M)	1,000 (M)	(G,M,X)	ID	NLV	NLV	NLV	NLV	4.4E+7	9.0E+5 (draft)	4.0E+5	4.0E+5	NA
Lindane	58899	NA	20 (M)	20 (M)	20 (M)	3,200	ID	ID	ID	ID	ID	1.2E+5	1.6E+5	3.8E+5	NA
Lithium (B)	7439932	9,800	3,400	7,000	500	1.2E+8	NLV	NLV	NLV	NLV	ID	2.6E+7	2.6E+7	2.6E+7	NA
Magnesium (B)	7439954	NA	8.4E+6	2.4E+7	NA	1.0E+9 (D)	NLV	NLV	NLV	NLV	2.9E+9	1.0E+9 (D)	1.0E+9 (D)	1.0E+9 (D)	NA
Manganese (B)	7439965	4.4E+5	2,000 (M)	2,000 (M)	(G,X)	2.0E+8	NLV	NLV	NLV	NLV	1.5E+6	2.1E+8	3.0E+8	7.0E+8	NA
Mercury (Inorganic) (B)	7439976	130	1,700	1,700	170	47,000	NLV	NLV	NLV	NLV	ID	1.4E+6	1.9E+6	4.5E+6	NA
Methane	74828	NA	ID	ID	ID	ID	(K)	ID	ID	ID	ID	ID	ID	ID	ID
Methanol (I)	67561	NA	74,000	2.0E+5	ID	3.1E+6 (C)	1.2E+6	3.7E+7	4.6E+7	9.7E+7	9.6E+10	3.1E+6 (C)	3.1E+6 (C)	3.1E+6 (C)	3.1E+6
Methoxychlor	72435	NA	1.3E+5	1.3E+5	NA	1.4E+5	ID	ID	ID	ID	ID	2.3E+7	3.2E+7	7.4E+7	NA
2-Methoxyethanol (I)	109864	NA	150	400	ID	1.8E+7	NLV	NLV	NLV	NLV	5.9E+8	7.4E+5	1.0E+6	2.1E+6	1.1E+8
2-Methyl-4-chlorophenoxyacetic acid	94746	NA	390	1,100	NA	4.3E+5	NLV	NLV	NLV	NLV	ID	4.5E+6	6.3E+6	1.5E+7	NA
2-Methyl-4,6-dinitrophenol	534521	NA	1,700 (M)	1,700 (M)	NA	1.6E+5	NLV	NLV	NLV	NLV	ID	1.6E+6	2.2E+6	5.2E+6	NA
Methyl parathion	298000	NA	44	130	NA	66,000	NLV	NLV	NLV	NLV	ID	1.1E+6	1.6E+6	3.7E+6	NA
4-Methyl-2-pentanone (MIBK) (I)	108101	NA	36,000	1.0E+5	ID	2.7E+6 (C)	2.7E+6 (C)	5.3E+7	5.3E+7	7.0E+7	6.0E+10	2.7E+6 (C)	2.7E+6 (C)	2.7E+6 (C)	2.7E+6
Methyl-tert-butyl ether (MTBE)	1634044	NA	800	800	15,000 (X)	6.0E+6 (C)	6.0E+6 (C)	3.1E+7	4.1E+7	8.9E+7	8.8E+10	6.0E+6 (C)	6.0E+6 (C)	6.0E+6 (C)	6.0E+6
N-Methyl-morpholine (I)	109024	NA	400	1,100	NA	3.2E+7	NLV	NLV	NLV	NLV	ID	2.0E+6	2.8E+6	5.6E+6	1.1E+8
Methylcyclopentane (I)	96377	NA	ID	ID	NA	ID	ID	ID	ID	ID	ID	ID	ID	ID	3.4E+5
4,4'-Methylene-bis-2-chloroaniline (MBOCA)	101144	NA	NLL	NLL	NLL	NLL	NLV	NLV	NLV	NLV	1.1E+8	1.6E+5	2.2E+5	5.1E+5	NA

040290 - 2/10/2006

ATTACHMENT A
SOIL: INDUSTRIAL AND COMMERCIAL II, III, AND IV
PART 201 GENERIC CLEANUP CRITERIA AND SCREENING LEVELS

			Groundwater Protection				Indoor Air	Ambient Air (Y)				Direct Contact			
		#10	#21		#12	#13	#22	#23	#24	#25	#26	#27	#28	#29	#20
Chemical	Chemical Abstract Service Number	Statewide Default Background Levels	Residential Drinking Water Protection Criteria	Industrial And Commercial Drinking Water Protection Criteria	Groundwater Surface Water Interface Protection Criteria	Groundwater Contact Protection Criteria	Soil Volatilization to Indoor Air Inhalation Criteria	Infinite Source Volatile Soil Inhalation Criteria (VSIC)	Finite VSIC for 5 Meter Source Thickness	Finite VSIC for 2 Meter Source Thickness	Particulate Soil Inhalation Criteria	Industrial and Commercial II	Commercial III	Commercial IV	Soil Saturation Concentration Screening Levels
Methylene chloride	75092	NA	100	100	19,000 {X}	2.2E+6	2.4E+5	7.0E+5	1.7E+6	4.0E+6	8.3E+9	2.3E+6 {C}	2.3E+6 {C}	2.3E+6 {C}	2.3E+6
2-Methylnaphthalene	91576	NA	57,000	1.7E+5	ID	7.1E+6	ID	ID	ID	ID	ID	1.6E+8	2.3E+8	5.4E+8	NA
2-Methylphenol	95487	NA	7,400	20,000	1,600	1.4E+7	NLV	NLV	NLV	NLV	2.9E+9	3.7E+7	5.2E+7	1.0E+8	NA
3-Methylphenol	108394	NA	7,400	20,000	NA	4.5E+6 {C}	NLV	NLV	NLV	NLV	ID	4.5E+6 {C}	4.5E+6 {C}	4.5E+6 {C}	4.5E+6
4-Methylphenol	106445	NA	740	2,000	ID	1.5E+6	NLV	NLV	NLV	NLV	ID	2.3E+7	3.2E+7	7.4E+7	NA
Metolachlor	51218452	NA	3,200	13,000	NA	4.4E+5 {C}	NLV	NLV	NLV	NLV	ID	4.4E+5 {C}	4.4E+5 {C}	4.4E+5 {C}	4.4E+5
Molybdenum {B}	7439987	NA	740	2,000	16,000 {X}	2.2E+7	NLV	NLV	NLV	NLV	ID	2.3E+7	3.2E+7	7.4E+7	NA
Naphthalene	91203	NA	17,000	50,000	850	2.0E+6	7.7E+7	5.9E+7	5.9E+7	5.9E+7	1.5E+10	1.6E+8	2.3E+8	5.4E+8	NA
Nickel {B}	7440020	20,000	1.0E+5	1.0E+5	{G}	1.0E+9 {D}	NLV	NLV	NLV	NLV	1.6E+7	3.4E+8	4.8E+8	1.0E+9 {D}	NA
Nitrate {B,N}	14797558	NA	2.0E+5 {N}	2.0E+5 {N}	NA	1.0E+9 {D}	NLV	NLV	NLV	NLV	ID	ID	ID	ID	NA
Nitrite {B,N}	14797650	NA	20,000 {N}	20,000 {N}	NA	4.2E+8	NLV	NLV	NLV	NLV	ID	ID	ID	ID	NA
Nitrobenzene (I)	98953	NA	330 {M}	330 {M}	3,600 {X}	1.9E+5	4.9E+5 {C}	4.6E+6	4.6E+6	4.6E+6	1.5E+9	3.4E+5	4.8E+5	4.9E+5 {C}	4.9E+5
2-Nitrophenol	88755	NA	400	1,200	ID	1.4E+6	NLV	NLV	NLV	NLV	ID	1.3E+7	1.8E+7	4.2E+7	NA
n-Nitroso-di-n-propylamine	621647	NA	330 {M}	330 {M}	NA	4,400	NLV	NLV	NLV	NLV	2.0E+6	3,500	5,000	9,900	1.5E+6
N-Nitrosodiphenylamine	86306	NA	3,400	14,000	NA	6.0E+5	NLV	NLV	NLV	NLV	ID	5.1E+6	7.1E+6	1.4E+7	NA
Oxamyl	23135220	NA	4,000	4,000	NA	1.0E+9 {D}	NLV	NLV	NLV	NLV	ID	1.7E+8	2.4E+8	5.6E+8	NA
Oxo-hexyl acetate	88230357	NA	1,500	4,200	NA	ID	ID	ID	ID	ID	2.4E+9	7.4E+6	1.0E+7 {C}	1.0E+7 {C}	1.0E+7
Pendimethalin	40487421	NA	1.1E+6	1.1E+6	NA	1.1E+6	NLV	NLV	NLV	NLV	ID	5.4E+8	7.6E+8	1.0E+9 {D}	NA
Pentachlorobenzene	608935	NA	29,000	81,000	NA	1.9E+5 {C}	ID	ID	ID	ID	ID	1.9E+5 {C}	1.9E+5 {C}	1.9E+5 {C}	1.9E+5
Pentachloronitrobenzene	82688	NA	37,000	37,000	NA	37,000	2.2E+5	2.8E+5	2.8E+5	2.8E+5	1.5E+8	3.4E+7	4.7E+7	1.1E+8	NA
Pentachlorophenol	87865	NA	3,200	3,200	{G,X}	2.7E+5	NLV	NLV	NLV	NLV	1.3E+8	63,000	89,000	1.7E+5	NA
Pentane (I)	109660	NA	ID	ID	NA	ID	2.4E+5 {C}	ID	ID	ID	5.2E+11	ID	ID	ID	2.4E+5
2-Pentene (I)	109682	NA	ID	ID	NA	ID	ID	ID	ID	ID	ID	ID	ID	ID	2.2E+5
Phenanthrene	85018	NA	12,000	34,000	2,300	4.5E+5	2.8E+7	1.5E+5	7.2E+5	7.2E+5	5.9E+7	1.6E+7	2.3E+7	5.4E+7	NA
Phenol	108952	NA	88,000	2.6E+5	4,200	1.2E+7 {C}	NLV	NLV	NLV	NLV	1.8E+10	1.2E+7 {C}	1.2E+7 {C}	1.2E+7 {C}	1.2E+7
Phosphorus (total)	7723140	NA	1.3E+6	4.8E+6	NA	ID	NLV	NLV	NLV	NLV	ID	1.0E+9 {D}	1.0E+9 {D}	1.0E+9 {D}	NA
Picloram	1918021	NA	10,000	10,000	NA	ID	NLV	NLV	NLV	NLV	ID	3.2E+8	4.4E+8	1.0E+9 {D}	NA
Piperidine	110894	NA	64	180	NA	6.4E+5	NLV	NLV	NLV	NLV	4.1E+9	3.3E+5	4.6E+5	9.1E+5	1.2E+8
Polybrominated biphenyls (J)	37324235	NA	NLL	NLL	NLL	NLL	NLV	NLV	NLV	NLV	ID	17,000	24,000	56,000	NA
Polychlorinated biphenyls (PCBs) (J,T)	1336363	NA	NLL	NLL	NLL	NLL	1.6E+7	8.2E+5	2.8E+7	2.8E+7	6.5E+6	{T}	{T}	{T}	NA
Prometon	1610180	NA	4,900	14,000	NA	4.9E+6	NLV	NLV	NLV	NLV	ID	9.9E+7	1.4E+8	3.3E+8	NA
Propachlor	1918167	NA	1,900	5,400	NA	8.4E+6	NLV	NLV	NLV	NLV	ID	5.9E+7	8.2E+7	1.9E+8	NA

REV. 1
8/99

040291 - 2/10/2006

ATTACHMENT A
SOIL: INDUSTRIAL AND COMMERCIAL II, III, AND IV
PART 201 GENERIC CLEANUP CRITERIA AND SCREENING LEVELS

			Groundwater Protection				Indoor Air	Ambient Air (Y)				Direct Contact			
		#10	#21		#12	#13	#22	#23	#24	#25	#26	#27	#28	#29	#20
Chemical	Chemical Abstract Service Number	Statewide Default Background Levels	Residential Drinking Water Protection Criteria	Industrial And Commercial Drinking Water Protection Criteria	Groundwater Surface Water Interface Protection Criteria	Groundwater Contact Protection Criteria	Soil Volatilization to Indoor Air Inhalation Criteria	Infinite Source Volatile Soil Inhalation Criteria (VSIC)	Finite VSIC for 5 Meter Source Thickness	Finite VSIC for 2 Meter Source Thickness	Particulate Soil Inhalation Criteria	Industrial and Commercial II	Commercial III	Commercial IV	Soil Saturation Concentration Screening Levels
Propazine	139402	NA	4,000	11,000	NA	1.7E+5	NLV	NLV	NLV	NLV	ID	1.2E+8	1.7E+8	4.0E+8	NA
Propionic acid (I)	79094	NA	3.6E+5	7.0E+5	NA	1.1E+8 (C)	NLV	NLV	NLV	NLV	8.8E+9	1.1E+8 (C)	1.1E+8 (C)	1.1E+8 (C)	1.1E+8
Propyl alcohol (I)	71238	NA	28,000	80,000	NA	1.1E+8 (C)	NLV	NLV	NLV	NLV	2.1E+10	1.1E+8 (C)	1.1E+8 (C)	1.1E+8 (C)	1.1E+8
n-Propylbenzene (I)	103651	NA	1,600	4,600	NA	ID	ID	ID	ID	ID	5.9E+8	8.2E+6	1.0E+7 (C)	1.0E+7 (C)	1.0E+7
Propylene glycol	57556	NA	3.0E+6	8.4E+6	NA	1.0E+7 (C)	NLV	NLV	NLV	NLV	1.8E+11	1.0E+7 (C)	1.0E+7 (C)	1.0E+7 (C)	1.0E+7
Pyrene	129000	NA	4.7E+5	4.7E+5	ID	4.7E+5	1.0E+9 (D)	7.7E+8	7.7E+8	7.7E+8	2.9E+9	3.4E+8	4.7E+8	1.0E+9 (D)	NA
Pyridine (I)	110861	NA	330 (M)	420	NA	37,000 (C)	2,000	9,800	40,000	97,000	1.0E+8	37,000 (C)	37,000 (C)	37,000 (C)	37,000
Selenium (B)	7782492	410	4,000	4,000	400	8.8E+7	NLV	NLV	NLV	NLV	5.9E+7	2.3E+7	3.2E+7	7.4E+7	NA
Silver (B)	7440224	1,000	4,500	13,000	500 (M)	2.3E+8	NLV	NLV	NLV	NLV	2.9E+6	2.1E+7	3.0E+7	7.0E+7	NA
Silvex (2,4,5-TP)	93721	NA	3,700	3,700	NA	2.8E+6	NLV	NLV	NLV	NLV	ID	3.4E+7	4.7E+7	1.1E+8	NA
Simazine	122349	NA	80	80	NA	90,000	NLV	NLV	NLV	NLV	ID	2.3E+7	3.3E+7	7.7E+7	NA
Sodium (B)	7440235	NA	3.2E+6	9.0E+6	NA	1.0E+9 (D)	NLV	NLV	NLV	NLV	ID	1.0E+9 (D)	1.0E+9 (D)	1.0E+9 (D)	NA
Strontium (B)	7440246	NA	92,000	2.6E+5	15,000	1.0E+9 (D)	NLV	NLV	NLV	NLV	ID	1.0E+9 (D)	1.0E+9 (D)	1.0E+9 (D)	NA
Styrene (I)	100425	NA	2,700	2,700	2,200	85,000	5.2E+5 (C)	3.2E+6	3.2E+6	4.0E+6	6.6E+9	5.2E+5 (C)	5.2E+5 (C)	5.2E+5 (C)	5.2E+5
Sulfate	14808798	NA	5.0E+6	5.0E+6	NA	ID	NLV	NLV	NLV	NLV	ID	ID	ID	ID	NA
Tebuthiuron	34014181	NA	10,000	30,000	NA	5.0E+7	NLV	NLV	NLV	NLV	ID	3.2E+8	4.4E+8	1.0E+9 (D)	NA
2,3,7,8-Tetrabromodibenzo-p-dioxin (O)	50585416	NA	NLL	NLL	NLL	NLL	NLV	NLV	NLV	NLV	ID	(O)	(O)	(O)	NA
1,2,4,5-Tetrachlorobenzene	95943	NA	1.5E+6	1.5E+6	IP	1.5E+6	ID	ID	ID	ID	ID	1.0E+9 (D)	1.0E+9 (D)	1.0E+9 (D)	NA
2,3,7,8-Tetrachlorodibenzo-p-dioxin (O)	1746016	NA	NLL	NLL	NLL	NLL	NLV	NLV	NLV	NLV	89	0.99	1.4	2.9	NA
1,1,1,2-Tetrachloroethane	630206	NA	660	26,000	NA	2.2E+5	65,000	1.9E+5	2.1E+5	3.3E+5	5.3E+8	9.5E+5	9.8E+5 (C)	9.8E+5 (C)	9.8E+5
1,1,2,2-Tetrachloroethane	79345	NA	86	340	1,600 (X)	42,000	23,000	34,000	34,000	34,000	6.8E+7	1.2E+5	1.7E+5	3.5E+5	8.7E+5
Tetrachloroethylene	127184	NA	100	100	900 (X)	88,000 (C)	60,000	6.0E+5	1.4E+6	3.3E+6	6.8E+9	88,000 (C)	88,000 (C)	88,000 (C)	88,000
Tetrahydrofuran (I)	109999	NA	4,800	14,000	2.2E+5 (X)	7.8E+7	2.4E+6	ID	ID	ID	1.7E+11	2.5E+7	3.4E+7	6.8E+7	1.2E+8
Thallium (B)	7440280	NA	2,300	2,300	4,200 (X)	1.6E+7	NLV	NLV	NLV	NLV	ID	3.0E+5	4.2E+5	1.0E+6	NA
Toluene (I)	108883	NA	16,000	16,000	2,800	2.5E+5 (C)	2.5E+5 (C)	3.3E+6	3.6E+7	3.6E+7	1.2E+10	2.5E+5 (C)	2.5E+5 (C)	2.5E+5 (C)	2.5E+5
p-Toluidine	106490	NA	660 (M)	660 (M)	NA	1.3E+5	NLV	NLV	NLV	NLV	1.3E+8	7.9E+5	1.1E+6	1.2E+6 (C)	1.2E+6
Toxaphene	8001352	NA	2,600	2,600	860	11,000	NLV	NLV	NLV	NLV	1.2E+7	23,000	32,000	63,000	NA
Triallate	2303175	NA	95,000	2.5E+5 (C)	NA	2.5E+5 (C)	ID	ID	ID	ID	ID	2.5E+5 (C)	2.5E+5 (C)	2.5E+5 (C)	2.5E+5
Tributylamine	102829	NA	7,800	23,000	ID	5.3E+5	1.1E+6	ID	ID	ID	2.1E+8	1.0E+6	1.5E+6	2.9E+6	3.7E+6
1,2,4-Trichlorobenzene	120821	NA	4,200	4,200	1,800	8.9E+5	1.1E+6 (C)	3.4E+7	3.4E+7	3.4E+7	1.1E+10	1.1E+6 (C)	1.1E+6 (C)	1.1E+6 (C)	1.1E+6
1,1,1-Trichloroethane	71556	NA	4,000	4,000	4,000	4.6E+5 (C)	4.6E+5 (C)	4.5E+6	1.5E+7	3.1E+7	2.9E+10	4.6E+5 (C)	4.6E+5 (C)	4.6E+5 (C)	4.6E+5
1,1,2-Trichloroethane	79005	NA	100	100	6,600 (X)	1.9E+5	24,000	57,000	57,000	1.2E+5	2.5E+8	4.4E+5	6.1E+5	9.2E+5 (C)	9.2E+5

REV. 1
8/99

040292 - 2/10/2006

ATTACHMENT A
SOIL: INDUSTRIAL AND COMMERCIAL II, III, AND IV
PART 201 GENERIC CLEANUP CRITERIA AND SCREENING LEVELS

			Groundwater Protection				Indoor Air	Ambient Air (Y)				Direct Contact			
		#10	#21		#12	#13	#22	#23	#24	#25	#26	#27	#28	#29	#20
Chemical	Chemical Abstract Service Number	Statewide Default Background Levels	Residential Drinking Water Protection Criteria	Industrial And Commercial Drinking Water Protection Criteria	Groundwater Surface Water Interface Protection Criteria	Groundwater Contact Protection Criteria	Soil Volatilization to Indoor Air Inhalation Criteria	Infinite Source Volatile Soil Inhalation Criteria (VSIC)	Finite VSIC for 5 Meter Source Thickness	Finite VSIC for 2 Meter Source Thickness	Particulate Soil Inhalation Criteria	Industrial and Commercial II	Commercial III	Commercial IV	Soil Saturation Concentration Screening Levels
Trichloroethylene	79016	NA	100	100	4,000 (X)	2.2E+5	37,000	2.6E+5	4.4E+5	1.1E+6	2.3E+9	5.0E+5 (C)	5.0E+5 (C)	5.0E+5 (C)	5.0E+5
Trichlorofluoromethane	75694	NA	52,000	1.5E+5	NA	5.6E+5 (C)	5.6E+5 (C)	1.1E+8	1.4E+11	1.4E+11	1.7E+12	5.6E+5 (C)	5.6E+5 (C)	5.6E+5 (C)	5.6E+5
2,4,5-Trichlorophenol	95954	NA	1.6E+5	4.6E+5	NA	2.9E+7	NLV	NLV	NLV	NLV	1.0E+10	4.5E+8	6.3E+8	1.0E+9 (D)	NA
2,4,6-Trichlorophenol	88062	NA	11,000	45,000	700	7.8E+5	NLV	NLV	NLV	NLV	1.3E+9	1.4E+7	1.9E+7	4.5E+7	NA
1,2,3-Trichloropropane	96184	NA	840	2,400	NA	8.3E+5 (C)	ID	ID	ID	ID	ID	8.3E+5 (C)	8.3E+5 (C)	8.3E+5 (C)	8.3E+5
1,1,2-Trichloro-1,2,2-trifluoroethane	76131	NA	5.6E+5 (C)	5.6E+5 (C)	NA	5.6E+5 (C)	5.6E+5 (C)	2.1E+8	8.9E+8	2.1E+9	2.3E+12	5.6E+5 (C)	5.6E+5 (C)	5.6E+5 (C)	5.6E+5
Triethanolamine	102716	NA	74,000	2.0E+5	NA	1.1E+8 (C)	NLV	NLV	NLV	NLV	1.5E+9	1.1E+8 (C)	1.1E+8 (C)	1.1E+8 (C)	1.1E+8
3-Trifluoromethyl-4-nitrophenol	88302	NA	1.1E+5	3.1E+5	NA	1.1E+8	NLV	NLV	NLV	NLV	ID	1.0E+9 (D)	1.0E+9 (D)	1.0E+9 (D)	NA
Trifluralin	1582098	NA	5.7E+5	2.3E+6	NA	7.8E+6	ID	ID	ID	ID	ID	2.0E+7	2.7E+7	6.4E+7	NA
2,2,4-Trimethyl pentane	540841	NA	ID	ID	NA	ID	ID	ID	ID	ID	ID	ID	ID	ID	19,000
2,2,4-Trimethyl-2-pentene (I)	107404	NA	ID	ID	NA	ID	ID	ID	ID	ID	ID	ID	ID	ID	56,000
1,2,4-Trimethylbenzene (I)	95636	NA	2,100	2,100	ID	1.1E+5 (C)	1.1E+5 (C)	2.5E+7	6.0E+8	6.0E+8	3.6E+10	1.1E+5 (C)	1.1E+5 (C)	1.1E+5 (C)	1.1E+5
1,3,5-Trimethylbenzene (I)	108678	NA	1,800	1,800	ID	94,000 (C)	94,000 (C)	1.9E+7	4.6E+8	4.6E+8	3.6E+10	94,000 (C)	94,000 (C)	94,000 (C)	94,000
Triphenyl phosphate	115866	NA	1.1E+5 (C)	1.1E+5 (C)	NA	1.1E+5 (C)	NLV	ID	ID	ID	ID	1.1E+5 (C)	1.1E+5 (C)	1.1E+5 (C)	1.1E+5
tris(2,3-Dibromopropyl)phosphate	126727	NA	43	180	NA	27,000 (C)	27,000 (C)	60,000	60,000	60,000	7.4E+6	27,000 (C)	27,000 (C)	27,000 (C)	27,000
Urea	57136	NA	ID (N)	ID (N)	NA	ID	NLV	NLV	NLV	NLV	ID	ID	ID	ID	NA
Vanadium (B)	7440622	NA	1.0E+6	2.9E+6	240	1.0E+9 (D)	NLV	NLV	NLV	NLV	ID	3.9E+7	5.5E+7	1.3E+8	NA
Vinyl acetate (I)	108054	NA	13,000	36,000	NA	2.4E+6 (C)	1.5E+6	2.0E+6	2.7E+6	5.9E+6	5.9E+9	2.4E+6 (C)	2.4E+6 (C)	2.4E+6 (C)	2.4E+6
Vinyl chloride	75014	NA	40	40	300	5,800	150	1,500	9,000	22,000	4.7E+7	11,000	16,000	31,000	4.9E+5
White phosphorus (R)	12185103	NA	100 (M)	100 (M)	NA	64,000	NLV	NLV	NLV	NLV	ID	68,000	95,000	2.2E+5	NA
Xylenes (I)	1330207	NA	5,600	5,600	700	1.5E+5 (C)	1.5E+5 (C)	5.4E+7	6.5E+7	1.3E+8	1.3E+11	1.5E+5 (C)	1.5E+5 (C)	1.5E+5 (C)	1.5E+5
Zinc (B)	7440666	47,000	2.4E+6	5.0E+6	(G)	1.0E+9 (D)	NLV	NLV	NLV	NLV	ID	1.0E+9 (D)	1.0E+9 (D)	1.0E+9 (D)	NA

REV. 1
8/99

040293 - 2/10/2006

APPENDIX 2.120-2

SAMPLE HANDLING AND PRESERVATION METHODS

HOLDTIME, SAMPLE VOLUME AND PRESERVATION REQUIREMENTS

Method Description	Reference Method(s)	Holding Time	Minimum Sample Required Soil/Water	Preservation Requirements Chemical	Physical
Acidity	305.1	14 Days	100 mL	None required	4 degrees C
Alkalinity	310.1	14 Days	100 mL	None required	4 degrees C
Nitrogen as Ammonia	350.1	28 Days	500 mL	pH<2, w/H2SO4	4 degrees C
Biochemical Oxygen Demand	405.1	48 Hours	1 Liter	None required	4 degrees C
Bromide	300.0, 9056	28 Days	100 mL	None required	4 degrees C
Carbon, Total Inorganic and/or Organic	415.1 9060	28 Days	10g / 25 mL	pH<2, H2SO4 or HCl	4 degrees C
Chemical Oxygen Demand	410.4, 410.1	28 Days	50 mL	pH<2, w/H2SO4	4 degrees C
Chloride	300.0, 305.2 9056, 9251, 9252	28 Days	50 mL	None required	None required
Chlorine (Total residual)	330.5	Analyze immediately	200 mL	None required	None required
Corrosivity toward Steel	1110	None specified	500 mL	None required	Glass vessel
Cyanide, Total and/or Amenable	335.1, 335.2 9012	14 Days	20g / 500 mL	pH>12, w/NaOH Add 0.6g ascorbic Acid if C12 present	None required
Flashpoint, closed-cup	1010	None specified	200 g	None required	None required
Fluoride	300.0, 340.2	28 Days	200 mL	None required	Plastic vessel
Hardness	130.2, 2340 B	6 Months	500 mL	pH<2, w/HNO3	4 degrees C
Hexavalent Chromium	7196, 3500-CrD	24 Hours	10g / 100 mL	None required	4 degrees C
Mercury, Aqueous Matrices	245.1, 7470	28 Days	10g / 200 mL	pH<2, w/HNO3	None required
Mercury, Soil/Solid Matrices	7471	28 Days	10g / 200 mL	pH<2, w/HNO3	4 degrees C
Metals Analysis, other than Mercury and Hexavalent Chromium	Metals, 200.7, 200.8, 200 series 6010, 6020, 7000 series	6 Months	10g / 200 mL	pH<2, w/HNO3	Aqueous: None req. Soil/Solid: 4 deg. C
Nitrogen, Nitrate or Nitrate and Nitrite	300.0, 353.2	48 Hours	100 mL	None required	4 degrees C
Nitrogen, Nitrite only	351.2	28 Days	100 mL	pH<2, w/H2SO4	4 degrees C
Nitrogen, Total Kjeldahl	351.2	28 Days	500 mL	pH<2, w/H2SO4	4 degrees C
Oil and Grease	9071, 413.1	28 Days	50g / 1 Liter	pH<2, w/HCl	Glass vessel, 4 deg. C
Paint Filter Test	9095	None specified	200 g	None required	None required
pH (Electrometric or paper)	9040, 9041, 9045, 150.1	Analyze immediately	100 g / 50mL	None required	None required
Phenolics (4-AAP)	9065, 420.2	28 Days	500 mL	pH<2, w/H2SO4	Glass vessel, 4 deg. C
Phosphorus as Orthophosphate	300.0, 365.3	48 Hours	50 mL	pH<2, w/H2SO4	4 degrees C
Phosphorus, total	365.3	28 Days	50 mL	pH<2, w/H2SO4	4 degrees C
Reactive Cyanide	7.3.3.2	14 Days	200g	None required	Glass vessel

HOLDTIME, SAMPLE VOLUME AND PRESERVATION REQUIREMENTS

Method Description	Reference Method(s)	Holding Time Soils/Waters	Minimum Sample Required Soils/Waters	Preservation Requirements Chemical	Physical
Volatile Halogenated Organics - GC	601, 8010 8021	14 Days	15g / 2 X 40 mL	4 drops HCl (Waters only)	Glass vessel, 4 deg. no headspace
Nonhalogenated Volatile Organics - GC	8015	14 Days	15 g / 2X 40 mL	4 drops HCl (Waters only)	Glass vessel, 4 deg. no headspace
Aromatic Volatile Organics - GC	602 8020, 8021	14 Days	15 g / 2 X 40 mL	4 drops HCl (Waters only)	Glass vessel, 4 deg. no headspace
Acrolein, Acrylonitrile Acetonitrile - GC	8030, 603	14 Days	15 g / 2 X 40 mL	None required (adjust pH to 4-5)	Glass vessel, 4 deg. no headspace
Volatile - GC/MS	8240, 8260 624, 524.2	14 Days	15 g / 2 X 40 mL	4 drops HCl (Waters only)	Glass vessel, 4 deg. no headspace
Total Organic Halides	9020 9022	28 Days	250 mL	<pH 2, w/H2SO4	Amber glass vesse 4 deg. C, no headsp
Phenols	8040, 604	14 / 7 Days (extraction) 40 Days (analysis)	30 g / 2 X 1 Liter	None required	Amber glass vesse 4 degrees C
Phthalate Esters	8060, 606	14 / 7 Days (extraction) 40 Days (analysis)	30 g / 2 X 1 Liter	None required	Amber glass vesse 4 degrees C
Chlorinated Pesticides / PCB's	8080, 608	14 / 7 Days (extraction) 40 Days (analysis)	30 g / 2 X 1 Liter	None required	Amber glass vesse 4 degrees C
Polynuclear Aromatic Hydrocarbons	8100, 8310, 610	14 / 7 Days (extraction) 40 Days (analysis)	30 g / 2 X 1 Liter	None required	Amber glass vesse 4 degrees C
Chlorinated Hydrocarbons	8120, 612	14 / 7 Days (extraction) 40 Days (analysis)	30 g / 2 X 1 Liter	None required	Amber glass vesse 4 degrees C
Organ phosphorus Pesticides	8140	14 / 7 Days (extraction) 40 Days (analysis)	30 g / 2 X 1 Liter	None required	Amber glass vesse 4 degrees C
Chlorinated Herbicides	8150, 6640 B	14 / 7 Days (extraction) 40 Days (analysis)	30 g / 2 X 1 Liter	None required	Amber glass vesse 4 degrees C
Semivolatiles - GC/MS	8270, 625	14 / 7 Days (extraction) 40 Days (analysis)	30 g / 2 X 1 Liter	None required	Amber glass vesse 4 degrees C
EPTOX extraction	1310	None specified	100 g	None required	Glass vessel
TCLP extraction	1311	14 to 180 days to extraction dep. on analysis	100 g	None required	Glass vessel
Volatile on Carbon Sorbent	TO-1	14 Days	6000 cu. m	None required	4 degrees C
Volatiles on Tenax Sorbent	TO-2	14 Days	6000 cu. m	None required	4 degrees C
Pesticides/PCB's on Hi-Vol PUF/Filters, by GC	TO-4	14 / 7 Days (extraction) 40 Days (analysis)	300 cu. m	None required	4 degrees C
Semivolatiles on Hi-Vol PUF/Filters, by GC/MS	TO-13	14 / 7 Days (extraction) 40 Days (analysis)	300 cu. m	None required	4 degrees C
Volatiles in Summa Canister	TO-14	14 Days	6000 cu. cm	None required	None required
Metals/Particulates on Hi-Vol Filters	NA	28 Days to 6 Months	2000 cu. cm	None required	None required

HOLDTIME, SAMPLE VOLUME AND PRESERVATION REQUIREMENTS (Cont.)

Reactive Sulfide	7.3.4.2	14 Days	200 g	None required	Glass vessel
Residue, Filterable	160.1	7 Days	100 mL	None required	4 degrees C
Residue, Non-filterable	160.2	7 Days	100 mL	None required	4 degrees C
Residue, Settleable	160.5	48 Hours	1 Liter	None required	4 degrees C
Residue, Total	160.3	7 Days	100 mL	None required	4 degrees C
Residue, Volatile	160.4	7 Days	100 mL	None required	4 degrees C
Specific Conductance	9050, 120.1	28 Days	100g / 100 mL	None required	4 degrees C
Sulfate	300.0, 375.4 9038, 9056	28 Days	50 mL	None required	4 degrees C
Sulfides	9030, 376.1	7 Days	100g / 500 mL	Add Zinc Acetate pH>9, w/NaOH	None required
Total Petroleum Hydrocarbons	418.1	None Specified	200g / 2X 1 Liter	pH <2, w/HCl	4 degrees C
Turbidity	180.1	48 Hours	100 mL	None required	4 degrees C

- Holding time varies, depending on reference method. Using a glass vessel will satisfy both RCRA and NPDES requirements.

APPENDIX 2.120-3

ANALYTICAL PROCEDURES

ANALYTICAL METHODS

Parameter Groups	Endnote	NPDES	Standard Methods	Ambient Air
Inorganic Analyses				
Acid soluble	1	NA	NA	NA
Acidity (pH)		305.1	NA	NA
Alkalinity (pH)		310.1	2320 B	NA
Ammonia nitrogen		350.1	4500-NH3 H	NA
Biochemical oxygen demand		405.1	5210 B	NA
Bromide		300.0	NA	NA
BTU	2	NA	NA	NA
Carbon (inorganic)		415.1	NA	NA
Carbon (total)		415.1	NA	NA
Chemical oxygen demand		410.4, 410.1	5220 C, 5220 D	NA
Chloride		300.0, 325.2, 325.3	4500-Cl E	NA
Chlorine (demand)		NA	4500-Cl B	NA
Chlorine (residual)		330.5	4500-Cl G	NA
Chromium (hexavalent)		NA	3500-Cr D	NA
Conductivity		120	2510 B	NA
Corrosivity		NA	NA	NA
Cyanide (amenable)		335.1, 335.2	4500-CN G	NA
Cyanide (reactive)		NA	NA	NA
Cyanide (total)		335.2	4500-CN E	NA
Flashpoint		NA	NA	NA
Fluoride (free)		300.0, 340.2	4500-F C	NA
Halogens (%)	3	NA	NA	NA
Hardness (Ca + Mg)		NA	2340 B	NA
Hardness (trisomatrida)		130.2	2340 C	NA
Mercury		245.1	NA	NA
Metals other than Mercury and Hexavalent Chromium		200.7, 200.8, Metals, 200 Series	NA	HVF (6010)
Nitrate nitrogen		300.0, 353.2	NA	NA
Nitrate/Nitrite nitrogen		300.0, 353.2	4500-NO3 F	NA
Nitrite nitrogen		300.2, 354.1	4500-NO2 B	NA
Nitrogen (total Kjeldahl)		351.2	4500-Norg B	NA
Oil and grease		413.1	5520 B, 5520 D	NA
Paint filter test		NA	NA	NA
pH		150 1	4500-H+	NA
Phenols (4-AAP)		420.2	5530 C, 5530 D	NA
Phosphorus (ortho)		300.0, 365 3	4500-P F	NA
Phosphorus (total)		365 1	4500- P F	NA

ANALYTICAL METHODS (Cont.)

Parameter Groups	Endnote	NPDES	Standard Methods	Ambient Air
Solids (total dissolved)		160.1	2540 C	NA
Solids (total settleable)		160.5	NA	NA
Solids (total suspended)		160.2	2540 D	NA
Solids (total volatile)		160.4	NA	NA
Solids (total %)		160.3	NA	NA
Specific Conductance		120.1	NA	NA
Specific Gravity		NA	2710 E	NA
Sulfate		300.0, 375.4	NA	NA
Sulfide (reactive)		NA	NA	NA
Sulfide (total)		376.1	4500-S2 D, 4500-	NA
Sulfite		NA	4110 B	NA
Turbidity		180.1	2130	NA
Viscosity	4	NA	NA	NA
Organic Analyses				
Alcohols		NA	NA	NA
Total Petroleum Hydrocarbons (GC)	5	NA	NA	NA
Total Petroleum Hydrocarbons (IR)		418.1	5520 F	NA
Organic carbon, purgeable (POC)	6	NA	NA	NA
Organic carbon, total (TOC)		415.1	5310 B	NA
Organic halogen, purgeable (POX)	7	NA	NA	NA
Organic halogens total (TOX)		NA	NA	NA
Semivolatile Organics				
Basneutrals and acids		625	NA	TO-13
Chlorinated hydrocarbons		612, 625	NA	NA
Dioxides and dibenzofurans		NA	NA	NA
Explosives residues		NA	NA	NA
Gasoline Range Organics		NA	NA	NA
Haloethers		625	NA	NA
Nitroaromatics and isophorone		625	NA	NA
Nitrosamines		625	NA	NA
OCL herbicides		NA	6640 B	TO-4
OCL pesticides		608	6630 C	TO-4
OP pesticides		NA	NA	TO-4
PAH's		610, 625	NA	TO-13
PCB's		608	NA	TO-4
Phenols		604, 625	NA	NA
Phthalate esters		606, 625	NA	NA

ANALYTICAL METHODS (Cont.)

Parameter Groups	Endnote	NPDES	Standard Methods	Ambient Air
Volatile Organics			8260	
Halothers	3	501, 524	NA	TO-14
Ketones	3	524	NA	TO-14
Nitriles		603, 524	NA	TO-14
Purgeable aromatics	3	602, 524	NA	TO-1, TO-2, TO-14
Purgeable chlorinated	3	601, 524	NA	TO-1, TO-2, TO-14
THM's	3, 9	601, 524	NA	NA
Bioassay Analyses				
Chronic Toxicity, Fathead Minnow	10	NA	NA	NA
Chronic Toxicity, Ceriodaphnia	10	NA	NA	NA
Cleanup (alumina column)		NA	NA	NA
Cleanup (florisil column)		NA	NA	HVF (3620)
Cleanup (silica gel column)		NA	NA	NA
Cleanup (gel permeation chromatography-GPC)		NA	NA	NA
Cleanup (sulfur)		NA	NA	HFV (3660)
Digesting (flame AA or ICP AES)		200.7	NA	HVF (3050)
Digestion (ICP/MS)		200.8	NA	NA
Digestion (furnace AA)		200.7	NA	NA
Extraction (semivolatiles)		NA	NA	HVF (3540)
Extraction (purge and trap)		NA	NA	NA
Leaching procedure (EPTOX)		NA	NA	NA
Leaching procedure (TLCP)		NA	NA	NA
Leaching procedure (soil leachate)	11	NA	NA	NA
Waste dilution (high level semi-volatile organics in any matrix)		NA	NA	NA
Waste dilution (high level volatile organics in any matrix)		NA	NA	NA

Endnotes:

1) Acid scrub performed on the caustic scrub water created in the BTU procedure
2) Bomb calorimeter methods per manufacturer's recommendations.
3) % Total Halogen is performed on the caustic scrub water created in the BTU procedure.
4) Viscosity methods per manufacturers' recommendations. No equivalent EPA, SM or ASTM procedure published.
5) Reference Method is ASTM D3328.
6) Modification of Total Organic Carbon analysis. Detection by IR No equivalent EPA, SM or ASTM procedure.
7) Modification of the Total Organic Halogens analysis. Detection by ELCD (electrolytic conductivity detector). No equivalent EPA, SM, or ASTM procedure.
8) Reference method for drinking water is EPA 524.2.
9) Reference method for drinking water is EPA 501.1.
10) Reference method is EPA 600/4-89-001.
11) This procedure is a soil-to-distilled water leach of the constituents of concern. (See also, ASTM D3987.) The results of analysis are expressed as "water-leachable" constituents.
12) NPDES Standards used for surface water otherwise Standard Methods are used for soil and groundwater listing

Abbreviation conventions
CLP = Contract Laboratory Program Statement of Work.
HVF = High volume filter taken from the high volume air sampler
NA = Not applicable

APPENDIX 2.120-5

WASTE PROFILE

ENVIRONMENTAL DISPOSAL SYSTEMS, INC.
WASTE PROFILE

Profile #

(___) Check here if this is a Recertification LOCATION OF ORIGINAL _____

GENERAL INFORMATION

1. Generator Name: _____
2. Generator Address: _____
3. Technical Contact / Phone: _____
4. Alternate Contact / Phone: _____

Generator USEPA ID _____

Billing Address: _____

(___) Same _____

Billing Contact / Phone: _____

PROPERTIES AND COMPOSITION

5. Process Generating Waste: _____
6. Waste Name: _____

7A. Is this a USEPA hazardous waste (40 CFR Part 251)? Yes (____) No (____)

B. Identify ALL USEPA listed and characteristic waste code numbers (D, F, K, P, U): _____ State Waste Codes: _____

8. Physical State @ 70F: A. Solid (___) Liquid (___) Both (___) Gas (___) B. Single Layer (___) Multi layer (___) C. Free liq. range _____ to _____ %

9A. pH: Range _____ or Not Applicable (___) B. Strong order (___): describe: _____

10. Liquid Flash Point: < 73F (___) 73-99F (___) 100-130F (___) 140-199F (___) >=200F (___) N.A. (___) Closed Cup (___) Open Cup (___)

11. CHEMICAL COMPOSITION: List ALL Constituents (incl. halogenated organics) present in any concentration and forward analysis

Constituents	Range	Unit Description
	to	
	to	
	to	
	to	
	to	
	to	
TOTAL COMPOSITION (MUST EQUAL OR EXCEED 100a):		

12. OTHER: PCBs If yes, concentration _____ppm, PCBs regulated by 40 CFR 761 (___). Pyrophoric (___) Explosive (___) Radioactive (___) Benzene if yes, concentration _____ppm. Shock Sensitive (___) Oxidizer (___) Carcinogen (___) Infectious (___) Other _____

13. If waste subject to the land ban & meets treatment standards, check here: ____ & supply analytical results where applicable.

SHIPPING INFORMATION

14. PACKAGING: Bulk Solid (___) Bulk Liquid (___) Drum (___) Type/Size: _____ Other: _____

15. ANTICIPATED Annual Volume: _____ Units: _____ Shipping Frequency: _____

SAMPLING INFORMATION

Sample Tracking Number: _____

16a. Sample source (drum, lagoon, pond, tank, vat, etc.): _____

Date Sampled: _____ Sampler's Name/Company: _____

16b. Generator's Agent Supervising Sampling: _____ 17 (___) No sample required (See Instructions.)

GENERATOR'S CERTIFICATION

I hereby certify that all information submitted in this and all attached documents contains true and accurate descriptions of this waste. Any sample submitted is representative as defined in 40 CFR 261 - Appendix I or by using an equivalent method. All relevant information regarding known or suspected hazards in the possession of the generator has been disclosed. I authorize EDS to obtain a sample from any waste shipment for purposes of recertification.

Signature _____ Generator _____ Date _____

Profile #

30 OTHER HAZARDOUS CONSTITUENTS indicate if the waste contains any of the following:

ORGANICS	TCLP data Check only ONE for each constituent					TCA or TOTAL Use units ppm, mg/l or %
	Less Than	Regulated Level	Equal or More	Waste No	TCLP Analytical Test Results Use Units ppm or mg/l	
Benzene		0.5 mg/l		D018		
Carbon Tetrachloride		0.5 mg/l		D019		
Chlordane		0.03 mg/l		D020		
Chlorbenzene		100.0 mg/.l		D021		
Chloroform		6.0 mg/l		D022		
m-Cresol		200.0 mg/l		D024		
o-Cresol		200.0 mg/l		D023		
p-Cresol		200.0 mg/l		D025		
Cresol		10.0 mg/l		D026		
2,4-D		7.5 mg/l		D016		
1m4 Dichlorbenzene		0.5 mg/l		D027		
1, 2 - Dichloroethylene		0.7 mg/l		D028		
2, 4 - Dinitro toluene		0.13 mg/l		D029		
Endrin		0.02 mg/l		D030		
Heptachlor, and its hydroxide		0.006 mg/l		D012		
Hexachloro-1,3 butadine		0.5 mg/l		D031		
Hexachlorobenzene		0.13 mg/l		D033		
Hexachloroethane		3.0 mg/l		D032		
Lincane		0.4 mg/l		D034		
Methoxychlor		10.0 mg/l		D013		
Methyl Ethyl Ketone		200.0 mg/l		D014		
Nitrobenzene		2.0 mg/l		D036		
Pentachlorophenol		100.0 mg/l		D037		
Pyridine		5.0 mg/l		D038		
Tetrachloroethylene		0.7 mg/l		D039		
Toxaphene		0.5 mg/l		D015		
2, 4, 5 - T. P Silvex		1.0 mg/l		D017		
Trichloroethylene		0.5 mg/l		D040		
2, 4, 5 - Trichlorophenol		400.0 mg/l		D041		
2, 4, 6 - Trichlorophenol		2.0 mg/l		D042		
Vinyl Chloride		0.2 mg/l		D043		

Profile #

18. Check ONE. This Waste is a _____ Wastewater _____ Nonwastewater.

19. If this waste is subject to any California list restrictions enter the letter from below (either A or B 2) next to each restriction that is applicable.
_____ HOCs, _____ PCBs, _____ Acid, _____ Metals, _____ Cyanides

20 Identify ALL Characteristic and Listed USEPA hazardous waste numbers that apply (as defined by 40 CFR 261). For each waste number, identify the subcategory (as applicable, check none, or write in the description from 40 CFR 268.41, 268.42 and 268.43).

REF #	A. US EPA HAZARDOUS WASTE CODE(S)	B. SUBCATEGORY ENTER THE SUBCATEGORY DESCRIPTION - IF NOT APPLICABLE, SIMPLY CHECK NONE		C. APPLICABLE TREATMENT STANDARDS			D. HOW MUST THE WASTE BE MANAGED? ENTER THE LETTER FROM BELOW
				PERFORMANCE BASED CHECK AS APPLICABLE		SPECIFIED TECHNOLOGY: IF APPLICABLE ENTER THE 40 CFR 268.42 TABLE TREATMENT CODE(S)	
		DESCRIPTION	NONE	268.41(A)	268.43 (A)	268.42	
1							
2							
3							
4							
5							
6							
7							
8							
9							
10							

To list additional USEPA waste numbers and categories use additional page and check here: _____

Management under the land disposal restrictions

A. RESTRICTED WASTE REQUIRES TREATMENT

B..1. RESTRICTED WASTE TREATED TO PERFORMANCE STANDARDS

B.2. RESTRICTED WASTES FOR WHICH THE TREATMENT STANDARD IS EXPRESSED AS A SPECIFIED TECHNOLOGY (AND THE WASTE HAS BEEN TREATED BY THAT TECHNOLOGY)

C. RESTRICTED WASTE SUBJECT TO A VARIANCE

D. RESTRICTED WASTE CAN BE LAND DISPOSED WITHOUT FURTHER TREATMENT

21. Is this waste a soil and/or debris? No: _____ Yes, Soil: _____ Yes, Debris: _____ Yes, Both: _____

22. Specific Gravity Range: _____ to _____

23. Indicate the range of each. Units

Cyanifrds: _____ to _____ _____ None _____ Type (free, total, amenable, etc) _____

Cyanifrds: _____ to _____ _____ None _____ Type (free, total, amenable, etc) _____

Sulfides: _____ to _____ _____ None _____ Type _____

Optional Phenolics. _____ to _____ _____ None _____

24 Identify the waste color _____ and physical appearance _____

25 TRANSPORTATION INFORMATION
A. Is this a DOT Hazardous Material? Yes _____ No _____
B Proper Shipping Name _____
C. Hazard Class _____ ID: _____
D Additional Description _____
E. CERCLA Reportable Quality (R. Q) (and units - lb, kg): _____

26. SPECIAL HANDLING INFORMATION

_____ Additional Pages Attached

_____ Material Safety Data Sheets Attached

27. OTHER INFORMATION

28. EDS CERTIFICATION

EDS has all the necessary permits and licenses for the waste that has been characterized and identified by this approved profile.

Profile #

OTHER HAZARDOUS CONSTITUENTS indicate if the waste contains any of the following:

METALS	TCLP Data. Check only ONE for each constituent Use units. ppm, mg/l					TCA or TOTAL Use units ppm, mg/l, mg/kg or percent			
						California Lux			Actual
	Less Than	TC Regulated Level	Equal or More	Waste No.	TCLP Actual	Less Than	Regulated Level	Equal or More	
Arsenic as As		5.0 mg/l		D004			500 mg/l		
Barium as Ba		100.0 mg/l		D005					
Cadmium as CD	-	1.0 mg/l		D006			100 mg/l		
Chromium (Total) as Cr		5.0 mg/l		D007					
Lead as P. B.		5.0 mg/l		D008			500 mg/l		
Mercury as Hg		0.2 mg/l		D009			20 mg/l		
Selenium as Se		1.0 mg/l		D010			100mg/l		
Silver as Ag		5.0 mg/l		D011					
Nickel as Ni							134 mg/l		
Thallium as Tl							130 mg/l		
Chromium (hexavalent) as Cr+6							500 mg/l		
Antimony as Sb									
Beryllium as Be									
Copper as Cu									
Vanadium as V									
Zinc as Zn									

ENVIRONMENTAL DISPOSAL SYSTEMS, INC. (EDS)

CERTIFICATION OF REPRESENTATIVE SAMPLE

General Directions: In order to determine whether we can accept the special waste described in the above numbered profile sheet, we must obtain representative sample of the waste. We will analyze the sample to verify the information you have provided us, so it is particularly important that the sample be truly representative. In most circumstances, you will be obtaining the sample. However, in those cases in which we obtain the sample, we must ask that one of your employees be present to direct the particular source to be sampled and to witness the sampling. In such cases, your employee must sign the certification as a witness.

The undersigned certifies that he/she obtained a representative sample of the waste material described in the "Generator's Waste Profile Sheet" above referenced and that the following representations are true and correct:

1. Hour and Date of Sampling: _____
2. Source from which Sample is taken: _____
3. Equipment and Sampling Method Used: _____

   _____
4. Amount of Sample Obtained: _____
5. Type of container into which Sample was placed: _____
6. At the time of sampling, the Sample was labeled as follows: _____

   _____
7. The sampling equipment used and the container into which the Sample was placed were themselves uncontaminated before use.

Sampler Name: _____

Signature: _____

Title: _____

Employer: _____

Date of Sampling: _____

APPENDIX 2.120-6

TANK CLEANING REMOVAL PROCEDURES

TANK CLEANING REMOVAL PROCEDURES

1. Purpose

To establish standard operating procedures for the cleaning tanks.

The following procedures for cleaning of storage tanks extracted from published (API) guidelines.

2. Equipment and Materials

A. Tank Cleaning
The contractors shall conduct the removals in accordance with Fire Department stated procedures and regulations (NFPA 30, Appendix C 2034 and 593 H Chapter 19) and have on-site equipment necessary to perform the following tasks.

- Drain and flush piping contents into tank;
- Access and remove liquids and sludge from tank using pumps, vacuum trucks or vacuum tankers.
- Clean inside of tanks using triple rinse high pressure water after degassing.
- Disconnect, plug, and cap lines leading from tank;
- Removal of vapors from tank;
- Visual inspection to verify tank is clean
- Plugging and removal of tank from site; and
- Decontamination of removal equipment including collection of wash water for disposal.

3. Procedures for cleaning tanks.

A. The cleaning of tanks should be accomplished by following procedures described in 3.A.1 through 3.A.

1. Drain and flush the piping into the tank.

2. Remove all liquid from the tank which can be pumped out. It may be necessary to use a hand pump to remove the bottom few inches of product.

3. Remove the fill (drop) tube. Disconnect the fill, gauge, product, and vent lines. Cap or plug open ends of lines which are not to be used further.

4. Temporarily plug all tank openings.

5. Remove flammable vapors. The tank will be conditioned by one of the methods described in 3.A.6 through 3.A.8. or as required by local codes to ensure that no vapors remain.

6. If water is available and there is a suitable means for disposal, the tank will be

filled with water to expel vapors. While the tank is being filled with water, vapors will flow out of the tank and may surround the area. Hence, all normal safety and pollution precautions will be observed regarding liquids and vapors including elimination of potential ignition sources for the area.

7. If the method described in 3.A.6. is not practicable, the vapors in the tank will be made inert by adding solid carbon dioxide (dry ice) in the amount of 1.5 pounds per 100 gallons of tank capacity. The dry ice will be crushed and distributed evenly over the greatest possible area to secure rapid evaporation. Skin contact with dry ice will be avoided due to burn potential. As the dry ice vaporized, flammable vapors will flow out of the tank and may surround the area. Hence, all normal safety precautions regarding flammable vapors will be observed including elimination of potential ignition sources from the area. Degassing will continue until the dry ice vaporizes.

8. An alternate method is to ventilate the tank with air or by other suitable means. The flow of air through an opening near one end of the tank and the discharge of the vapor-air mixture out of an opening near the opposite wend end will quickly remove the vapor. The vapor concentration in the tank will be checked with a combustible gas indicator to determine when the tank is gas-free. While the tank is being ventilated, vapor may flow into the surrounding atmosphere. Hence all normal safety precautions regarding flammable vapors will be observed including elimination of potential ignition sources form the area.

9. After the tank has been freed of vapors and before the tank is moved from the site, all holes will be plugged or capped, the tank will be triple rinsed and inspected visually to verify it is clean. Screwed plugs will be used to plug any corrosion leak holes. One plug will have 1/8 inch vent hole to prevent the tank from being subjected to an excessive pressure differential caused by extreme temperature changes.

10. The tank will then be secured on a flatbed or lowboy trailer secured with chain binders and chock for transportation to the disposal site. The tank will be secured so that the 1/8 inch vent hole is located at the uppermost point on the tank. The tanks shall be disposed of at a metal scrap yard or reused. Appropriate paperwork will be provided to document transport and disposal.

APPENDIX 2.120-7

NOTICE LETTERS

ENVIRONMENTAL
DISPOSAL
SYSTEMS, INC.

P.O. Box 74456 • Romulus, Michigan 48174 • Telephone (313) 955-2100 • Facsimile (313) 955-6917

October 23, 1996

Registered Mail

Michigan Department of Environmental Quality
Waste Management Division
P.O. Box 30028
Lansing, MI 48909
Attention: Director

Subject: Notice of Closure
Environmental Disposal Systems. Inc. (EDS)
Romulus, Michigan

Dear Director:

Environmental Disposal Systems, Inc. (EDS) is providing notice that we intend to begin closure activities on _____ in accordance with the enclosed Closure Plan for our facility at 28470 Citrin Road, Romulus, MI. This notice is being provided to meet the requirements of R299.9613(3).

Sincerely,
ENVIRONMENTAL DISPOSAL SYSTEMS, INC.

Austin Marshall, P.E., P.G.
Vice President

enclosure

ENVIRONMENTAL
DISPOSAL
SYSTEMS, INC.

P.O. Box 74456 • Romulus, Michigan 48174 • Telephone (313) 955-2100 • Facsimile (313) 955-6917

October 23, 1996 Registered Mail

Michigan Department of Environmental Quality
Waste Management Division
P.O. Box 30028
Lansing, MI 48909
Attention: Director

Subject: Notice of Closure of Hazardous Waste Management Unit
(Description of Unit)
Environmental Disposal Systems. Inc. (EDS)
Romulus, Michigan

Dear Director:

Environmental Disposal Systems, Inc. (EDS) is providing notice that we have completed closure of the following Hazardous Waste Management Unit at our Romulus, Michigan facility, located at 28470 Citrin Road.

(Description of Closed Unit)

Supporting documentation is provided in Appendix A that includes:

a. Results of all sampling and analyses.
b. Sampling and analysis procedures.
c. A map showing the locations of where samples were obtained.
d. Any statistical evaluations of sampling data.
e. A summary of waste types and quantities removed from the site and the destination of these wastes.
f. The final depth and elevation of any soil excavated and a description of any fill material used.
g. Certification by an independent registered professionals engineer.

This notice is being provided to meet the requirements of R299.9613(3).

Sincerely,

Austin Marshall, P.E., P.G.
Vice President

ENVIRONMENTAL
DISPOSAL
SYSTEMS, INC.

P.O. Box 74456 • Romulus, Michigan 48174 • Telephone (313) 955-2100 • Facsimile (313) 955-6917

October 23, 1996

Registered Mail

Michigan Department of Environmental Quality
Waste Management Division
P.O. Box 30028
Lansing, MI 48909
Attention: Director

Subject: Notice of Final Closure of Hazardous Waste Management Unit
(Description of Unit)
Environmental Disposal Systems. Inc. (EDS)
Romulus, Michigan

Dear Director:

Environmental Disposal Systems, Inc. (EDS) is providing Notice of Final Closure of the following Hazardous Waste Management Unit at our Romulus, Michigan facility, located at 28470 Citrin Road:

(Description of Closed Unit)

Supporting documentation is provided in Appendix A that includes:

a. Results of all sampling and analyses.
b. Sampling and analysis procedures.
c. A map showing the locations of where samples were obtained.
d. Any statistical evaluations of sampling data.
e. A summary of waste types and quantities removed from the site and the destination of these wastes.
f. The final depth and elevation of any soil excavated and a description of any fill material used.
g. Certification by an independent registered professionals engineer.

This notice is being provided to meet the requirements of R299.9613(3).

Sincerely,

Austin Marshall, P.E., P.G.
Vice President

ENVIRONMENTAL
DISPOSAL
SYSTEMS, INC.

P.O. Box 74456 • Romulus, Michigan 48174 • Telephone (313) 955-2100 • Facsimile (313) 955-6917

October 23, 1996 Registered Mail

Michigan Department of Environmental Quality
Waste Management Division
P.O. Box 30028
Lansing, MI 48909
Attention: Director

Subject: Notice of Completion of Post Closure Care Period
of Hazardous Waste Management Unit
(Description of Unit)
Environmental Disposal Systems. Inc. (EDS)
Romulus, Michigan

Dear Director:

Environmental Disposal Systems, Inc. (EDS) is providing Notice of Completion of Post Closure Care Period of the following Hazardous Waste Management Unit at our Romulus, Michigan facility, located at 28470 Citrin Road.

(Description of Closed Unit)

Supporting documentation is provided in Appendix A that includes:

a. Results of all sampling and analyses.
b. Sampling and analysis procedures.
c. A map showing the locations of where samples were obtained.
d. Any statistical evaluations of sampling data.
e. A summary of waste types and quantities removed from the site and the destination of these wastes.
f. The final depth and elevation of any soil excavated and a description of any fill material used.
g. Certification by an independent registered professionals engineer.

This notice is being provided to meet the requirements of R299.9613(3).

Sincerely,

Austin Marshall, P.E., P.G.
Vice President