GAYLORD OPERATIONS SERVICE CENTER

OSTEGO COUNTY, MICHIGAN

STAIRS AND PORCH RENOVATIONS
PROJECT NO. 02-5644

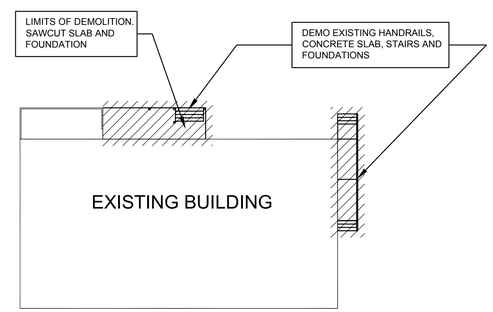

N

DEMOLITION PLAN

NOT TO SCALE

DRAWING INDEX

T TITLE SHEET

ARCHITECTURAL

A-1 FOUNDATION PLANS, FLOOR PLANS, FRAMING PLAN AND NOTES
A2 ELEVATIONS, SECTIONS, DETAILS AND EXISTING PHOTOS

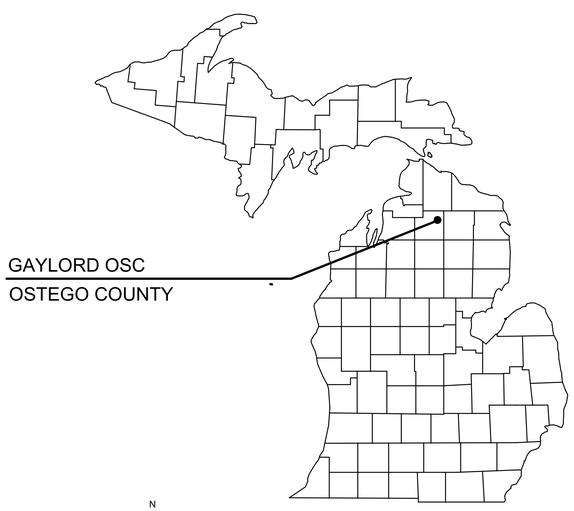

N

VICINITY PLAN

NO SCALE

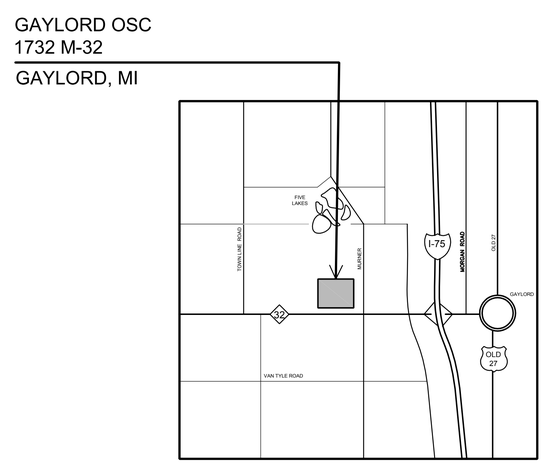

N

LOCATION MAP

NO SCALE

72 HOURS
(3 WORKING DAYS)

BEFORE YOU DIG
CALL MISS DIG

800-482-7171
(TOLL-FREE)

STATE OF MICHIGAN
DEPARTMENT OF NATURAL RESOURCES
OFFICE OF LAND AND FACILITIES
DESIGN & CONSTRUCTION SECTION
P.O. BOX 30033 LANSING, MI 48909-7933
517.241.1919 VOICE 517.241.4278 FAX

Michigan DNR

04/28/10	BIDS & CONSTRUCTION
04/23/10	90% OWNER REVIEW
02/16/10	50% OWNER REVIEW

STAIRS AND PORCH RENOVATIONS
GAYLORD OPERATIONS SERVICE CENTER
OSTEGO COUNTY

TITLE SHEET

PROJECT NO.	02-5644
INDEX	69800
PCA	34750
DRAWN BY	PS
DESIGNED BY	PS
PROJ. MGR.	PS

T

GENERAL

1. IT SHALL BE THE CONTRACTOR'S RESPONSIBILITY TO VERIFY ALL DIMENSIONS AND CONDITIONS AT THE JOB SITE AND TO CROSS-CHECK DETAILS AND DIMENSIONS ON THE DRAWINGS WITH RELATED REQUIREMENTS ON THE ARCHITECTURAL, MECHANICAL, AND ELECTRICAL CONST. DOCS. FLOOR AND WALL OPENINGS, SLEEVES, AND OTHER ARCHITECTURAL, MECHANICAL, AND ELECTRICAL REQUIREMENTS MUST BE COORDINATED BEFORE THE CONTRACTOR PROCEEDS WITH CONSTRUCTION.
2. ALL ENGINEERING DESIGN, CONSTRUCTION, AND TESTING SHALL CONFORM TO THE REQUIREMENTS OF THE MICHIGAN BUILDING CODE 2006 EDITION (HERE IN REFERRED TO AS THE CODE).
3. THESE DOCUMENTS DO NOT INCLUDE THE NECESSARY COMPONENTS FOR CONSTRUCTION SAFETY. SAFETY, CARE OF ADJACENT PROPERTIES DURING CONSTRUCTION, AND COMPLIANCE WITH LOCAL REGULATIONS REGARDING SAFETY IS, AND SHALL BE, THE CONTRACTOR'S RESPONSIBILITY.
4. ALL OMISSIONS OR CONFLICTS BETWEEN THE VARIOUS ELEMENTS OF THE WORKING DRAWINGS AND/OR SPECIFICATIONS SHALL BE BROUGHT TO THE ATTENTION OF THE ENGINEER BEFORE PROCEEDING WITH ANY WORK SO INVOLVED.
5. THE BUILDING IS DESIGNED TO PROVIDE A COMPLETE LOAD PATH TO THE FOUNDATION AS A FULLY CONSTRUCTED BUILDING; NOT DURING CONSTRUCTION. THE NECESSARY TEMPORARY BRACING OF WALLS AND ALL STEEL FRAMING DURING CONSTRUCTION IS THE CONTRACTOR'S RESPONSIBILITY.
6. DESIGN LOADS: PER 2006 MICHIGAN BUILDING CODE AND ANSI/ASCE7-02
   ROOF SNOW LOAD:

GROUND SNOW	=	60	
Is, IMPORTANCE FACTOR	=	1.0	
Ce, EXPOSURE FACTOR (B, FULLY EXPOSED)	=	1.0	
Ct, THERMAL FACTOR	=	1.2	
ROOF SNOW	=	60	PSF
ROOF DEAD LOAD	=	12	PSF
WIND LOAD INFO. : PER 2006 MBC OR ANSI/ASCE7-02			
BASIC WIND SPEED	=	90	MPH

CONCRETE

1. ALL READY MIX CONCRETE SHALL CONFORM TO A.S.T.M. C 94.
2. MEASURING, MIXING, TRANSPORTING, AND PLACING OF ALL CONCRETE SHALL COMPLY W/ ACI 304R-89.
3. ALL REINFORCING BARS, DOWELS, ANCHOR BOLTS AND ANY INSERTS SHALL BE SECURED IN POSITION PRIOR TO PLACING OF CONCRETE.
4. AIR ENTRAINED CONCRETE SHALL BE USED FOR ALL SIDEWALKS, PAVING, PLATFORMS, CURBS, AND ALL CONCRETE ELEMENTS EXPOSED TO THE WEATHER.
5. ALL CONCRETE SHALL DEVELOP THE FOLLOWING COMPRESSIVE STRENGTHS AT 28 DAYS (U.N.O.):

CONCRETE SLABS	=	4000	PSI
FOUNDATIONS	=	3000	PSI

6. LOCATE ALL SLEEVES, OPENINGS, EMBEDDED ITEMS, ETC., WHICH ARE INDICATED ON ALL DESIGN DRAWINGS. CHECK WITH ALL TRADES TO VERIFY THAT ALL SLEEVES, OPENINGS, AND EMBEDDED ITEMS ARE IN PLACE AND LOCATED CORRECTLY PRIOR TO PLACING OF CONCRETE.
7. THE SURFACE OF ALL CONSTRUCTION JOINTS SHALL BE CLEANED TO REMOVE ALL DUST, CHIPS, OR OTHER FOREIGN MATTER PRIOR TO PLACING THE ADJACENT CONCRETE.
8. ALL SLABS SHALL BE CURED AND SEALED TO MINIMIZE SHRINKAGE CRACKING.
9. REFER TO ARCHITECTURAL DRAWINGS FOR MOLDS, GROOVES, ORNAMENTS, OR ACCESSORIES REQUIRED TO BE CAST IN CONCRETE, AND FOR LOCATIONS OF FLOOR FINISHES AND SLAB DEPRESSIONS.
10. SLAB SURFACES SHALL BE SMOOTH AND LEVEL, OR SHALL HAVE SMOOTH EVEN SLOPE. CONCRETE FINISH SHALL BE SMOOTH FOR INTERIOR FLOOR SLABS AND BROOMED FOR EXTERIOR WALKS.
11. DURING COLD WEATHER MONTHS, ALL CONCRETE SHALL COMPLY W/ ACI COLD WEATHER CONCRETING, ACI 306R-88. PER ACI, COLD WEATHER IS DEFINED AS A PERIOD WHEN, FOR MORE THAN (3) CONSECUTIVE DAYS, THE FOLLOWING CONDITIONS MUST EXIST:

    1) THE AVERAGE DAILY AIR TEMP. IS LESS THAN 40 F, AND,
    2) THE AIR TEMP. IS NOT GREATER THAN 50 F FOR MORE THAN ONE-HALF OF ANY (24)-HR. PERIOD.

REINFORCING STEEL

1. ALL REINFORCING STEEL SHALL BE DEFORMED BARS CONFORMING TO A.S.T.M. A-615 GRADE 60 UNLESS NOTED UTHERWISE.
2. ALL REINFORCING BARS MARKED "CONTINUOUS" MAY BE SPLICED WITH A LAP OF 24 BAR DIAMETERS IN CONRETE AND 48 BAR DIAMETERS IN MASONRY, BUT NOT LESS THAN 24 INCHES. U.N.O.
3. ALL MASONRY REINFORCING SHALL BE PLACED AND SUPPORTED IN CONFORMANCE WITH THE PROVISIONS OF THE LATEST EDITION OF A.C.I. 530.1/ ASCE 6/ TMS 602.
4. TIE WIRE SHALL CONFORM TO A.S.T.M. A-82.
5. WELDED WIRE FABRIC SHALL BE SPLICED WITH A MINIMUM LAP OF TWO MODULES.
6. WELDED WIRE FABRIC SHALL CONFORM WITH A.S.T.M. A-185.
7. ALL REINFORCING STEEL SHALL HAVE THE FOLLOWING MINIMUM CONCRETE COVERAGE, UNLESS NOTED OTHERWISE:

CONCRETE PLACED AGAINST EARTH	=	3"
CONCRETE WITH FORMED SURFACES IN CONTACT WITH EARTH	=	2"
CONCRETE EXPOSED TO WEATHER SLABS, WALLS, AND JOISTS NOT EXPOSED TO WEATHER OR IN CONTACT WITH EARTH (#11 BARS AND SMALLER)	=	1 1/2"
BEAMS, GIRDERS AND COLUMNS NOT EXPOSED TO WEATHER OR IN CONTACT WITH EARTH	=	1 1/2"

8. DETAILING OF ALL BENT BARS SHALL COMPLY WITH THE ACI 318-89 CODE.
9. WELDING OF REINFORCING BARS IS NOT PERMITTED, UNLESS NOTED OTHERWISE.

MASONRY

1. BLOCK SHALL BE MEDIUM OR LIGHT WEIGHT UNITS CONFORMING TO A.S.T.M. C-90 , MINIMUM f'm = 1500 P.S.I.
2. SAND SHALL CONFORM TO A.S.T.M. C-144.
3. GROUT SHALL HAVE A MINIMUM STRENGTH OF 2000 PSI AT 28 DAYS.
4. GROUT SHALL CONFORM TO THE PROPORTION REQUIREMENTS OF ASTM C-476.
5. MORTAR SHALL BE TYPE "S": ONE PART CEMENT, 1/4 TO 1/2 PART HYDRATED LIMES OR LIME PUTTY, 2 1/4 TO 3 PARTS SAND AND SHALL CONFORM TO ASTM C-270. SAND SHALL BE IN LOOSE, DAMP CONDITION.
6. CONTRACTOR SHALL PROVIDE NECESSARY LABOR, MATERIALS, AND EQUIPMENT TO LAY UP MASONRY AS SHOWN OR SPECIFIED IN THESE DOCUMENTS. ALL WORK SHALL BE LAID PLUMB, TRUE AND SQUARE. WITH FILLED JOINTS.
7. ALL MASONRY WORK SHALL BE LAID RUNNING BOND UNLESS NOTED UTHERWISE.
8. MASONRY CONSTRUCTION AND MATERIALS SHALL CONFORM TO ALL REQUIREMENTS OF "SPECIFICATIONS FOR MASONRY STRUCTURES (ACI 530.1/ASCE 6/TMS 602)," PUBLISHED BY THE AMERICAN CONCRETE INSTITUTE, DETROIT, MICHIGAN, EXCEPT AS MODIFIED BY THE REQUIREMENTS OF THESE CONTRACT DOCUMENTS.
9. GROUT PLACEMENT AND CONSOLIDATION SHALL CONFORM TO SECTION 4 OF "SPECIFICATIONS FOR MASONRY STRUCTURES ACI 530.1/ASCE 6/TMS 602.
10. COLD WEATHER MASONRY CONSTRUCTION SHALL COMPLY W/ THE CODE REQUIREMENTS.

FOUNDATION

1. ALL FOOTINGS SHALL BE CONSTRUCTED ON UNDISTURBED SOIL.
2. ALL FILL AND BACKFILL MATERIALS SHALL BE NON-COHESIVE SOILS COMPACTED TO 95% MAXIMUM DENSITY PER A.S.T.M. D1557-70 METHOD. FILL SHALL BE PLACED IN 9" LIFTS MAXIMUM AND COMPACTED BEFORE PLACING THE NEXT LIFT.
3. NO SOILS REPORT WAS AVAILABLE AT THE TIME OF PREPARATION OF THESE DRAWINGS. SHOULD ANY CONDITIONS BE ENCOUNTERED THAT ARE UNUSUAL OR DO NOT GIVE ASSUMED BEARING CAPACITIES, THE OWNER SHALL BE NOTIFIED AND WORK SHALL CEASE. WORK SHALL NOT RESUME UNTIL THE ENGINEER OF RECORD EVALUATES THE EXCAVATION AND GIVES WRITTEN NOTICE TO RESUME FOUNDATION WORK.

   ASSUMED ALLOWABLE SOIL BEARING PRESSURE: 2000 PSF
4. ALL ORGANIC TOPSOILS SHALL BE STRIPPED FROM THE AREA UPON WHICH THE PROPOSED RESIDENCE IS TO BE LOCATED.

METAL

1. STEEL PIPE AND ACCESSORIES SHALL BE HOT-DIPPED GALVANIZED PER ASTM A123 AND ASTM 153/A153M.
2. FABRICATE INTEGRAL RAILING AND COMPONENT CONNECTIONS TO BE CAPABLE OF RESISTING A LOAD OF 200 POUNDS CONCENTRATED LOAD APPLIED IN ANY DIRECTION AT ANY POINT ON THE TOP RAIL AND A VERTICAL AND HORIZONTAL THRUST OF 50 POUNDS PER LINEAR FOOT APPLIED TO THE TOP RAILING WITHOUT PERMANENT SET OR DAMAGE. THE TWO LOADS ARE NOT CUMULATIVE.

   HSS = A500, GRADE B OR C, Fy = 46 KSI.

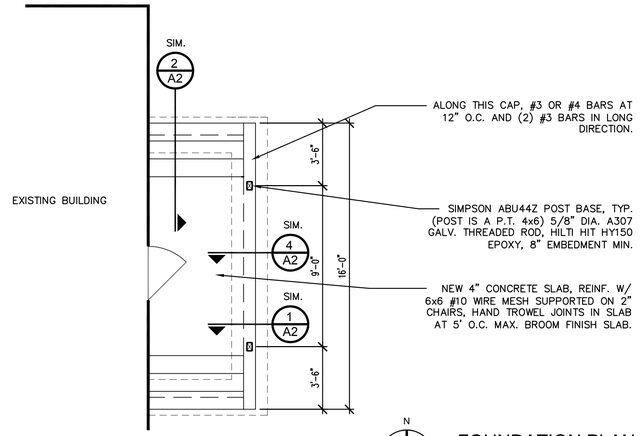

FOUNDATION PLAN
SCALE: 1/4" = 1'-0"

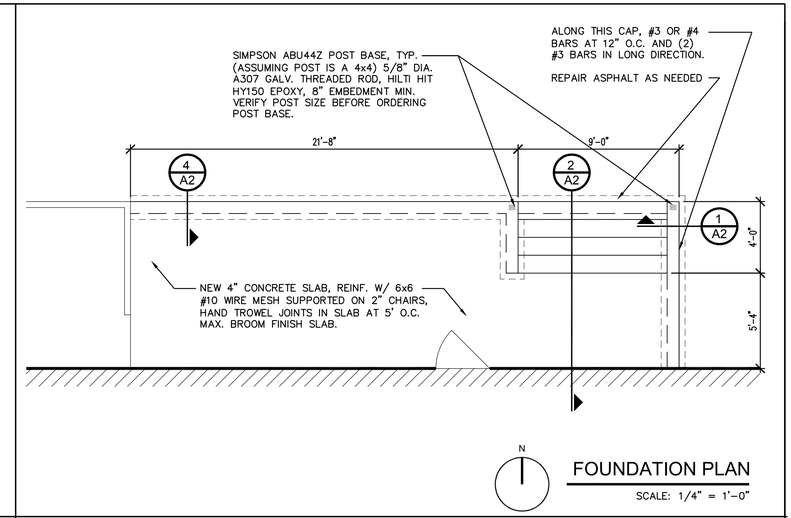

FOUNDATION PLAN
SCALE: 1/4" = 1'-0"

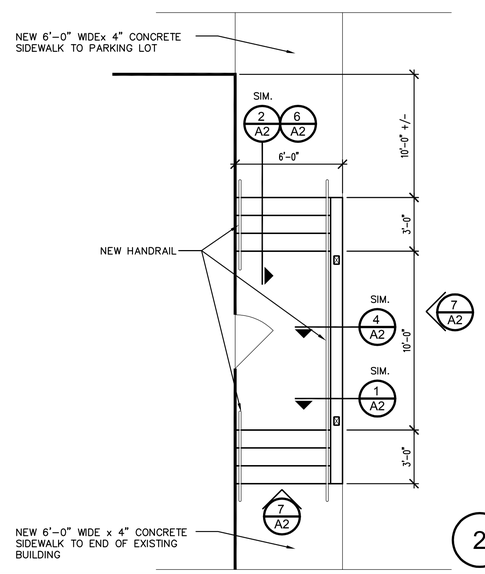

2 FLOOR PLAN
SCALE: 1/4" = 1'-0"

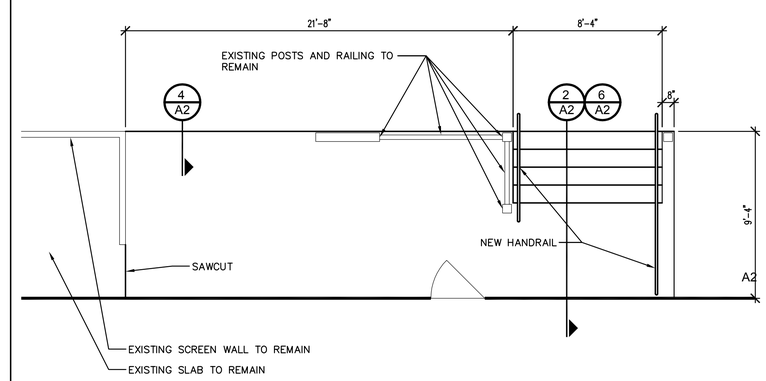

1 FLOOR PLAN
SCALE: 1/4" = 1'-0"

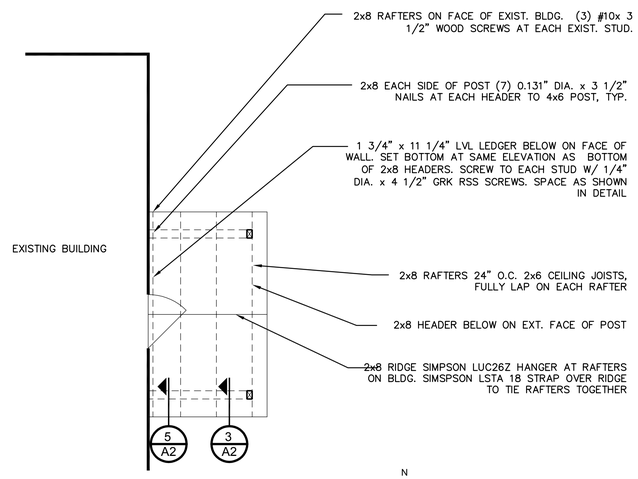

FRAMING PLAN
SCALE: 1/4" = 1'-0"

STAIR SECTION

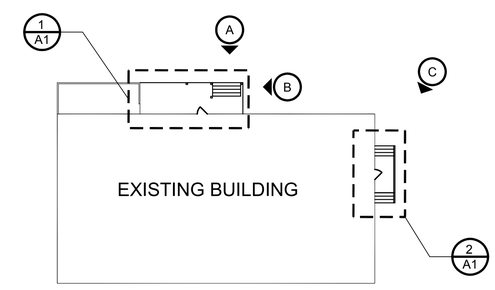

SITE PLAN
NOT TO SCALE

STATE OF MICHIGAN
DEPARTMENT OF NATURAL RESOURCES
OFFICE OF LAND AND FACILITIES
DESIGN & CONSTRUCTION SECTION
P.O. BOX 30033 LANSING, MI 48909-7933
517.241.1919 VOICE 517.241.4278 FAX

04/28/10	BIDS & CONSTRUCTION	
04/23/10	90% OWNER REVIEW	
02/16/10	50% OWNER REVIEW	

STAIRS AND PORCH RENOVATIONS
GAYLORD OPERATIONS SERVICE CENTER
OSTEGO COUNTY

FOUNDATION PLANS, FLOOR PLANS, FRAMING PLAN AND NOTES

PROJECT NO.	02-5544
INDEX	69800
PCA	34750
DRAWN BY	PS
DESIGNED BY	PS
PROJ. MGR.	PS

A1

PHOTO A

PHOTO B

PHOTO C

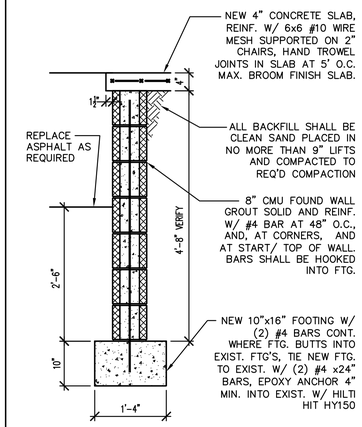

4 FOUNDATION WALL

SCALE: 3/4" = 1'-0"

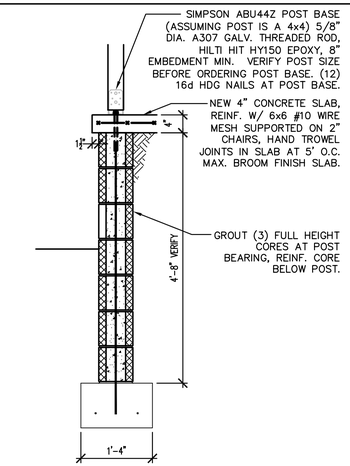

1 POST TO FOUNDATION

SCALE: 3/4" = 1'-0"

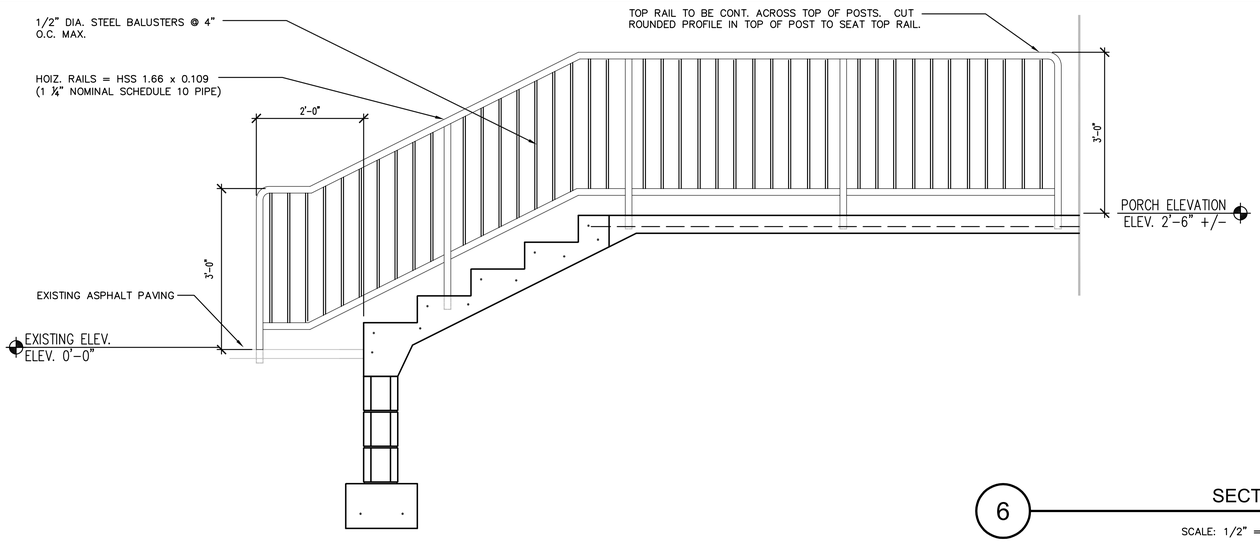

6 SECTION

SCALE: 1/2" = 1'-0"

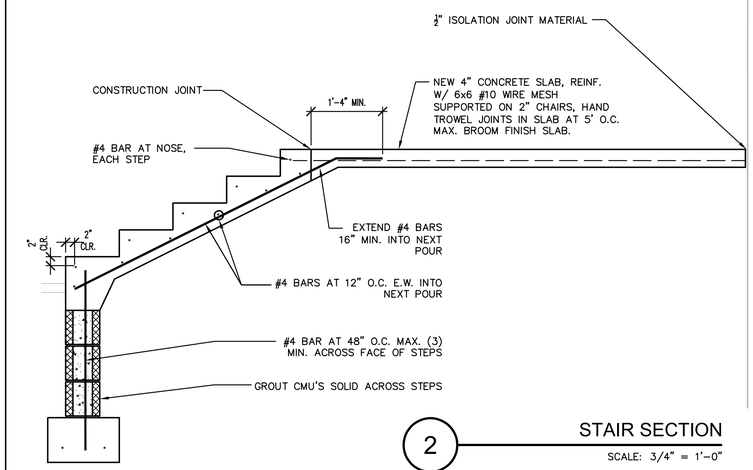

2 STAIR SECTION

SCALE: 3/4" = 1'-0"

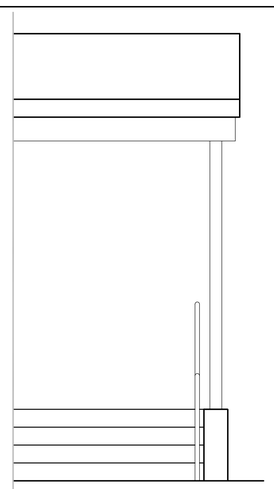

SIDE

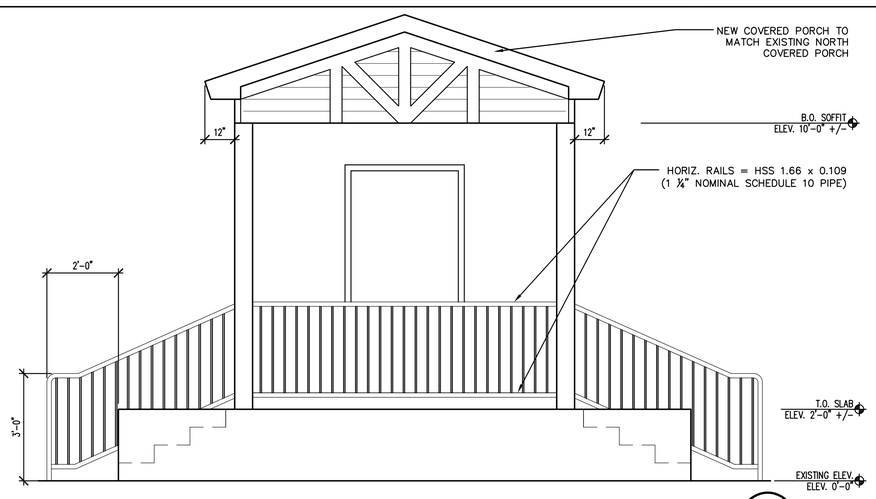

FRONT

7 ELEVATION

SCALE: 1/2" = 1'-0"

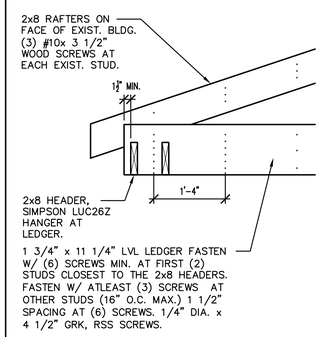

5 ROOF FRAMING AT WALL

SCALE: 3/4" = 1'-0"

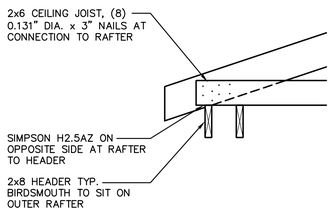

3 RAFTER TO HEADER

SCALE: 3/4" = 1'-0"

STATE OF MICHIGAN
DEPARTMENT OF NATURAL RESOURCES
OFFICE OF LAND AND FACILITIES
DESIGN & CONSTRUCTION SECTION
P.O. BOX 30033, LANSING, MI 48909-7933
517.241.1919 VOICE 517.241.4278 FAX

Michigan DNR

04/28/10	BIDS & CONSTRUCTION	
04/23/10	90% OWNER REVIEW	
02/16/10	50% OWNER REVIEW	

STAIRS AND PORCH RENOVATIONS

GAYLORD OPERATIONS SERVICE CENTER

OSTEGO COUNTY

ELEVATIONS, SECTIONS, DETAILS AND EXISTING PHOTOS

PROJECT NO.	02-5544
INDEX	69800
PCA	34750
DRAWN BY	PS
DESIGNED BY	PS
PROJ. MGR.	PS

A2