FORT WILKINS HISTORIC STATE PARK

COPPER HARBOR, MICHIGAN

MICHIGAN DEPARTMENT OF NATURAL RESOURCES
PARKS & RECREATION DIVISION

FLOATING FISHING PIER
MDNR PROJECT NO. 24-3207
MDMB FILE NO. 751/09440.AGY

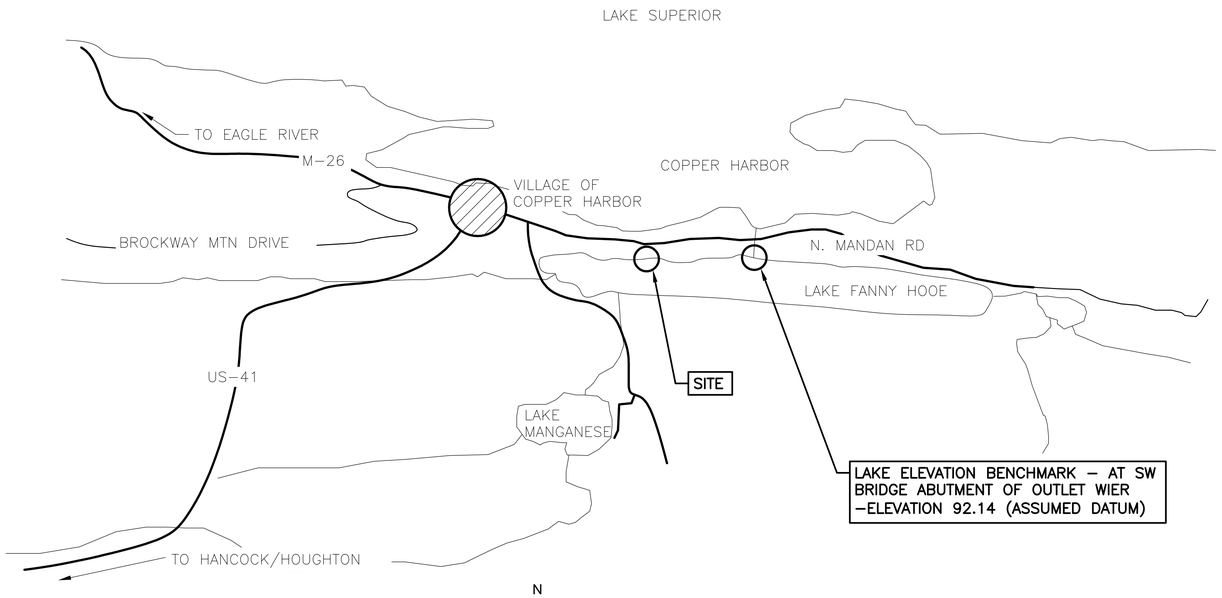

N

SITE MAP

NOT TO SCALE

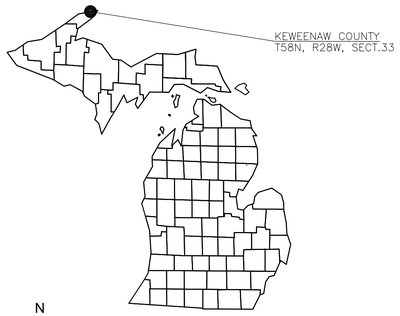

N

VICINITY MAP

NOT TO SCALE

GENERAL NOTES

1. THESE DRAWINGS INDICATES THE APPROXIMATE LOCATION OF KNOWN UNDERGROUND UTILITIES BASED UPON A COMBINATION OF ORIGINAL AND AS–BUILT DOCUMENTS. THE CONTRACTOR IS RESPONSIBLE TO HAND DIG, IDENTIFY AND LOCATE ALL EXISTING UNDERGROUND UTILITIES PRIOR TO DEMOLITION OR CONSTRUCTION.
2. ALL WORK SHALL BE DONE IN ACCORDANCE WITH THE LATEST "AMERICANS WITH DISABILITIES ACT – ACCESSIBILITY GUIDELINES FOR BUILDINGS AND FACILITIES".
3. THE RUNNING SLOPES ON SIDEWALKS AND ADA ROUTES SHALL NOT EXCEED 1:20 (5%) UNDER ANY CIRCUMSTANCE. TARGET = 4.5%+/–0.5% . SIDEWALKS AND ADA ROUTES SHALL HAVE CROSS SLOPES WITHIN THE RANGE OF 1% TO 2%, AND SHALL NOT EXCEED 2% UNDER ANY CIRCUMSTANCE. TARGET = 1.5% +/– 0.5%
4. PICNIC TABLE PADS AND BENCH PADS SHALL HAVE SLOPES LESS THAN 2% IN ANY DIRECTION.
5. IF ANY ARTIFACTS ARE DISCOVERED DURING THE CONSTRUCTION PROCESS, ALL WORK IS TO STOP AND THE OWNER'S REPRESENTATIVE AND PROJECT MANAGER SHALL BE NOTIFIED. ARTIFACTS OR ARCHAEOLOGICAL MATERIALS ARE DEFINED AS: ABORIGINAL ANTIQUITIES AND OTHER RECORDS ON ANTIQUITY, INCLUDING MOUNDS, MINES, EARTHWORKS VILLAGE SITES, CAMP SITES, BURIALS, HUMAN OR OTHER BONES, SHELLS, STONE IMPLEMENTS, BONE OR COPPER IMPLEMENTS, POTTERY OR SHARD OF POTTER, OR OTHER OBJECTS RELATING TO NATIVE AMERICAN OCCUPATION; AND MORE MODERN ARTIFACTS, SUCH AS FORTS, RELICS AND OTHER ARTIFACTS RELATING TO THE HISTORIC, COLONIAL, TERRITORIAL, AND EARLY STATEHOOD PERIODS.
6. BIDS FOR CONSTRUCTION OF ALL WORK SHOWN ON THE PLANS ARE SOLICITED ON A LUMP SUM BASIS. NO SEPARATE PAYMENT OR ADJUSTMENTS TO THE LUMP SUM BID WILL BE MADE UNLESS SPECIFICALLY INDICATED ON THE PLANS AND IN THE PROPOSAL OR WHEN ADDITIONAL WORK IS AUTHORIZED IN WRITING BY THE ENGINEER.
7. THE CONTRACTOR SHALL IMMEDIATELY NOTIFY THE DESIGN ENGINEER OF ANY DEVIATION FROM THIS PLAN.

PERMITS REQUIREMENTS

1. MICHIGAN DEPARTMENT OF ENVIRONMENTAL QUALITY – LAND & WATER MANAGEMENT PERMIT No. 90–42–0014P
2. SOIL EROSION AND SEDIMENT CONTROL NOTICE TO PROCEED FROM THE MICHIGAN DEPARTMENT OF NATURAL RESOURCES

CONTACT INFORMATION

- MDNR DESIGN & CONSTRUCTION SECTION.....(517)–241–1919
- MDNR PARK/SITE SUPERVISOR, LEE VERBERKMOES....(906)–289–4215
- MDNR DISTRICT PLANNER, KEITH CHELI.....(231)–627–4632
- KEEWEENAW COUNTY ROAD COMMISSION ..... (906)–337–1610

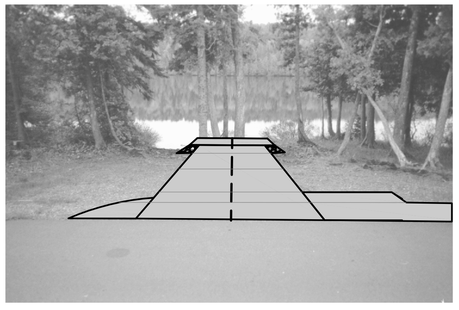

VIEW SOUTH AT LOCATION OF CONCRETE WALK & ABUTMENT

VIEW EAST AT LOCATION OF ABUTMENT

DRAWING INDEX

GENERAL

T ..... TITLE SHEET

CIVIL

C1 ..... EXISTING SITE/REMOVALS/SESC PLAN
C2 ..... PROPOSED PLAN
C3 ..... FLOATING PIER PLAN & ELEVATION
C4 ..... FLOATING PIER RAILING DETAILS
C5 ..... FLOATING PIER GANGWAY/ABUTMENT DETAILS
C6 ..... DETAILS & ALTERNATES

OFFICE OF LAND AND FACILITIES
DESIGN & CONSTRUCTION SERVICES

☐ APPROVED: _____ SECTION MANAGER DATE

☐ APPROVED: _____ ENGINEERING SUPERVISOR DATE

STATE OF MICHIGAN
DEPARTMENT OF NATURAL RESOURCES
OFFICE OF LAND AND FACILITIES
DESIGN & CONSTRUCTION SECTION
P.O. BOX 30033 LANSING, MI 48909-7933
517.241.1919 VOICE 517.241.4278 FAX

Michigan DNR

10/21/09	BIDS & CONSTRUCTION	
08/28/09	95% OWNER REVIEW	
5/09	50% OWNER REVIEW	

FLOATING FISHING PIER
FORT WILKINS
HISTORIC STATE PARK
KEEWENAW COUNTY

TITLE SHEET

PROJECT NO.	24-3207
INDEX	51220
PCA	65900
DRAWN BY	BDW
DESIGNED BY	BDW
PROJ. MGR.	BDW

T

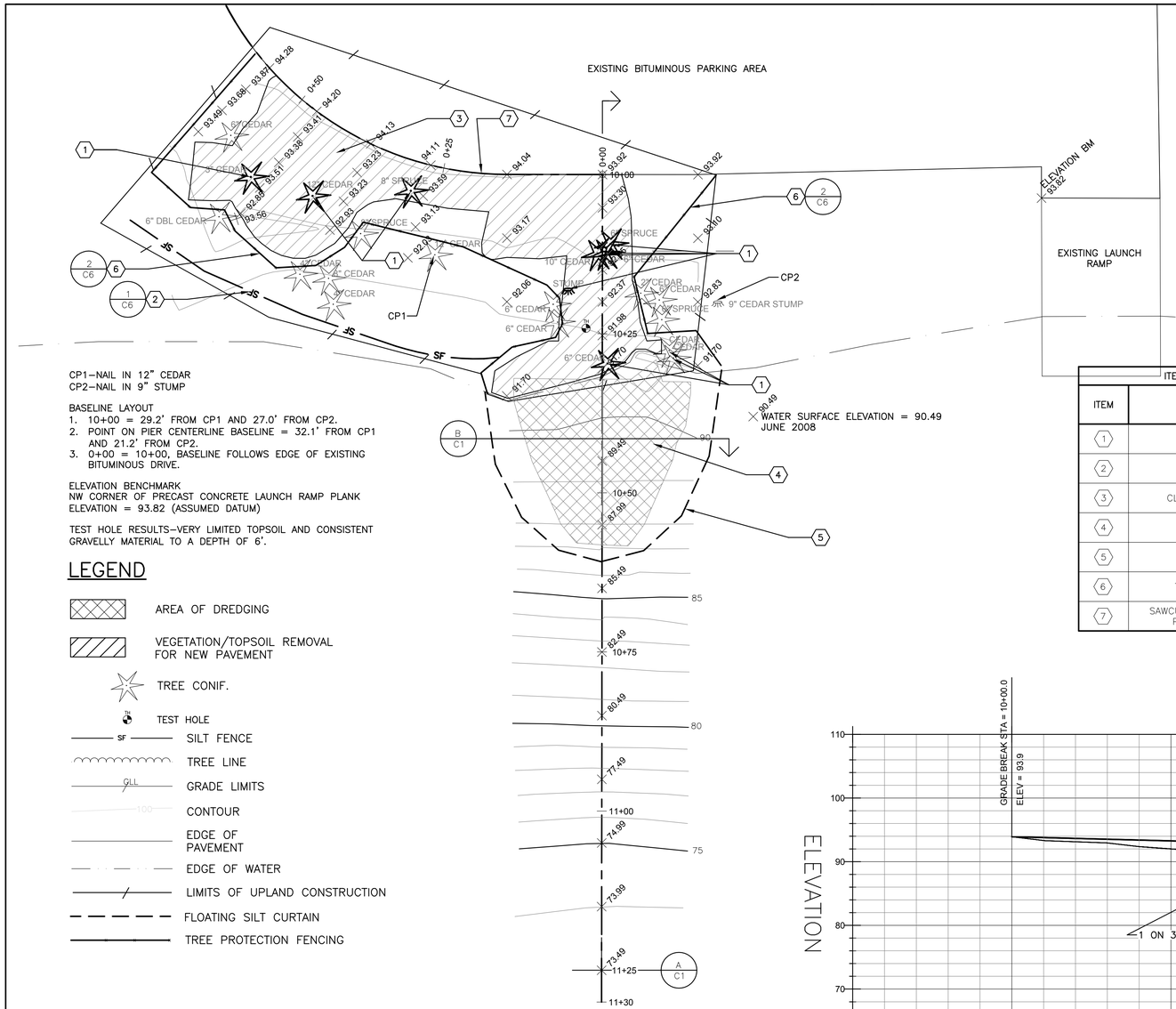

CP1–NAIL IN 12" CEDAR
CP2–NAIL IN 9" STUMP

BASELINE LAYOUT
1. 10+00 = 29.2' FROM CP1 AND 27.0' FROM CP2.
2. POINT ON PIER CENTERLINE BASELINE = 32.1' FROM CP1 AND 21.2' FROM CP2.
3. 0+00 = 10+00, BASELINE FOLLOWS EDGE OF EXISTING BITUMINOUS DRIVE.

ELEVATION BENCHMARK
NW CORNER OF PRECAST CONCRETE LAUNCH RAMP PLANK
ELEVATION = 93.82 (ASSUMED DATUM)

TEST HOLE RESULTS–VERY LIMITED TOPSOIL AND CONSISTENT GRAVELLY MATERIAL TO A DEPTH OF 6'.

LEGEND

- AREA OF DREDGING
- VEGETATION/TOPSOIL REMOVAL FOR NEW PAVEMENT
- TREE CONIF.
- TEST HOLE
- SILT FENCE
- TREE LINE
- GRADE LIMITS
- CONTOUR
- EDGE OF PAVEMENT
- EDGE OF WATER
- LIMITS OF UPLAND CONSTRUCTION
- FLOATING SILT CURTAIN
- TREE PROTECTION FENCING

PROJECT NORTH

DEMOLITION/SESC PLAN

1" : 10' 0 10' 20'

ITEMS – THIS SHEET	
ITEM	DESCRIPTION
1	TREE REMOVAL
2	SILT FENCE
3	CLEARING & VEGETATION REM.
4	DREDGING
5	FLOATING SILT CURTAIN
6	TREE PROTECTION FENCING
7	SAWCUT EXISTING BITUMINOUS ALONG PROPOSED CONCRETE WALK

DEMOLITION NOTES

1. INSTALL ALL SILT FENCE, CHECK DAMS, RIP RAP, AND ANY OTHER SOIL EROSION & SEDIMENTATION CONTROL MEASURES PRIOR TO DEMOLITION OR CONSTRUCTION.
2. UNLESS SPECIFICALLY NOTED FOR REMOVAL ON THE PLANS, ALL SIDEWALKS DRIVES, CULVERTS, GUARDRAILS, AND ABOVE GROUND UTILITIES SHALL BE PROTECTED. ALL SUCH UTILITIES DAMAGED OR DESTROYED DURING CONSTRUCTION SHALL BE REMOVED AND REPLACED INCIDENTAL TO CONSTRUCTION.
3. REMOVE AND STOCKPILE EXISTING TOPSOIL & VEGETATION AS DIRECTED BY THE ENGINEER.
4. DREDGE SPOILS SHALL BE SPREAD OUT IN THE HEADQUARTERS PARKING LOT AS DIRECTED BY THE ENGINEER.
5. REMOVE ALL VEGETATION WITHIN THE GRADING LIMITS OF THE PROPOSED CONCRETE SIDEWALK AND ABUTMENT AND RIPRAP.
6. NOTE: NOT ALL TREES REQUIRING REMOVAL MAY BE LOCATED ON THE DRAWING, CONTRACTOR SHALL FAMILIARIZE THEMSELVES WITH THE SITE TO DETERMINE ALL TREES WITHIN THE APPROVED CLEARING LIMITS REQUIRING REMOVAL. NO ADDITIONAL COMPENSATION WILL BE MADE FOR ADDITIONAL TREE REMOVALS. CONTRACTOR SHALL MARK TREES FOR REMOVAL FOR REVIEW BY THE OWNER PRIOR TO BEGINNING REMOVAL. ALL OTHER TREES SHALL BE PROTECTED.
7. TREES 4" AND LARGER REMOVED AS PART OF THE WORK SHALL BE CUT INTO 8' TO 10' LENGTHS FREE FROM ALL LIMBS AND BRANCHES AND SHALL BE STOCKPILED IN AN AREA DESIGNATED BY THE ENGINEER. LIMBS, BRUSH, AND BRANCHES SHALL BE CHIPPED AND ALL CHIPS SHALL BE STOCKPILED IN AN AREA DESIGNATED BY THE ENGINEER. ALL STUMPS SHALL BE REMOVED FROM THE SITE.
8. IF ANY ARTIFACTS ARE DISCOVERED DURING THE CONSTRUCTION PROCESS, ALL WORK IS TO STOP AND THE OWNER'S REPRESENTATIVE AND PROJECT MANAGER SHALL BE NOTIFIED. ARTIFACTS OR ARCHAEOLOGICAL MATERIALS ARE DEFINED AS: ABORIGINAL ANTIQUITIES AND OTHER RECORDS ON ANTIQUITY, INCLUDING MOUNDS, MINES, EARTHWORKS VILLAGE SITES, CAMP SITES, BURIALS, HUMAN OR OTHER BONES, SHELLS, STONE IMPLEMENTS, BONE OR COPPER IMPLEMENTS, POTTERY OR SHARD OF POTTER, OR OTHER OBJECTS RELATING TO NATIVE AMERICAN OCCUPATION; AND MORE MODERN ARTIFACTS, SUCH AS FORTS, RELICS AND OTHER ARTIFACTS RELATING TO THE HISTORIC, COLONIAL, TERRITORIAL, AND EARLY STATEHOOD PERIODS.

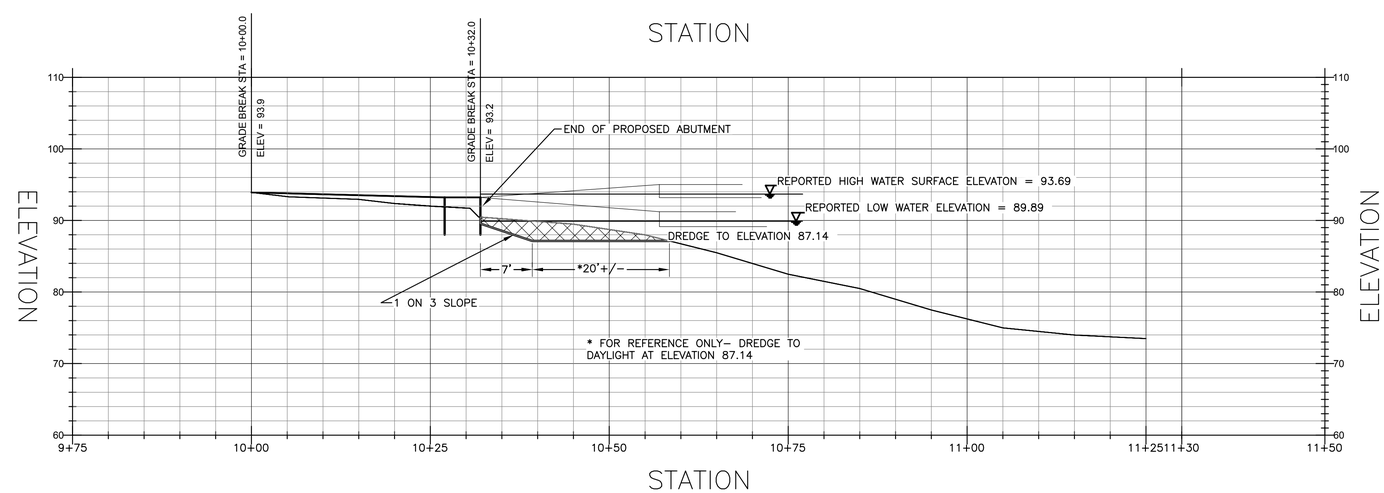

A DREDGING PROFILE

1" : 10' 0 10' 20'

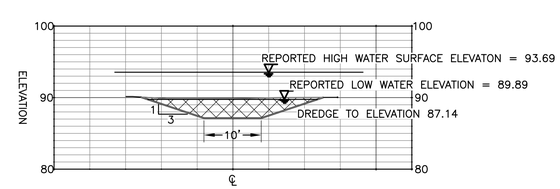

B DREDGING SECTION @ STA 10+40

1" : 10' 0 10' 20'

SESC NOTES

1. SITE IS ON THE SHORELINE OF LAKE FANNY HOOE.
2. SURFACE SOIL IS TOPSOIL AND SANDY GRAVEL (GROUP A).
3. ALL SESC MEASURES ARE TO BE INSTALLED PRIOR TO STARTING WORK, AND MAINTAINED THROUGHOUT THE PROJECT.
4. PROVIDE REGULAR SWEEPING OF ALL PAVED AREAS TO MINIMIZE TRACKING OFF–SITE.
5. DNR OR DMB OBSERVER WILL CONDUCT SESC INSPECTION EVERY WEEK MINIMUM AND AFTER EVERY SIGNIFICANT RAIN EVENT.
6. AT COMPLETION OF FINAL GRADING, CONTRACTOR TO INSTALL TOPSOIL, SEED, FERTILIZER, AND MULCH.

72 HOURS
(3 WORKING DAYS)
BEFORE YOU DIG
CALL MISS DIG
800-482-7171
(TOLL-FREE)

STATE OF MICHIGAN
DEPARTMENT OF NATURAL RESOURCES
OFFICE OF LAND AND FACILITIES
DESIGN & CONSTRUCTION SECTION
P.O. BOX 30033 LANSING, MI 48909-7933
517.241.1919 VOICE 517.241.4278 FAX

Michigan DNR

10/21/09	BIDS & CONSTRUCTION	
08/28/09	95% OWNER REVIEW	
5/09	50% OWNER REVIEW	

FLOATING FISHING PIER
FORT WILKINS HISTORIC STATE PARK
KEEWENAW COUNTY

EXISTING SITE/ REMOVALS/SESC

PROJECT NO.	24-3207
INDEX	51220
PCA	65900
DRAWN BY	BDW
DESIGNED BY	BDW
PROJ. MGR.	BDW

C1
2 OF 7

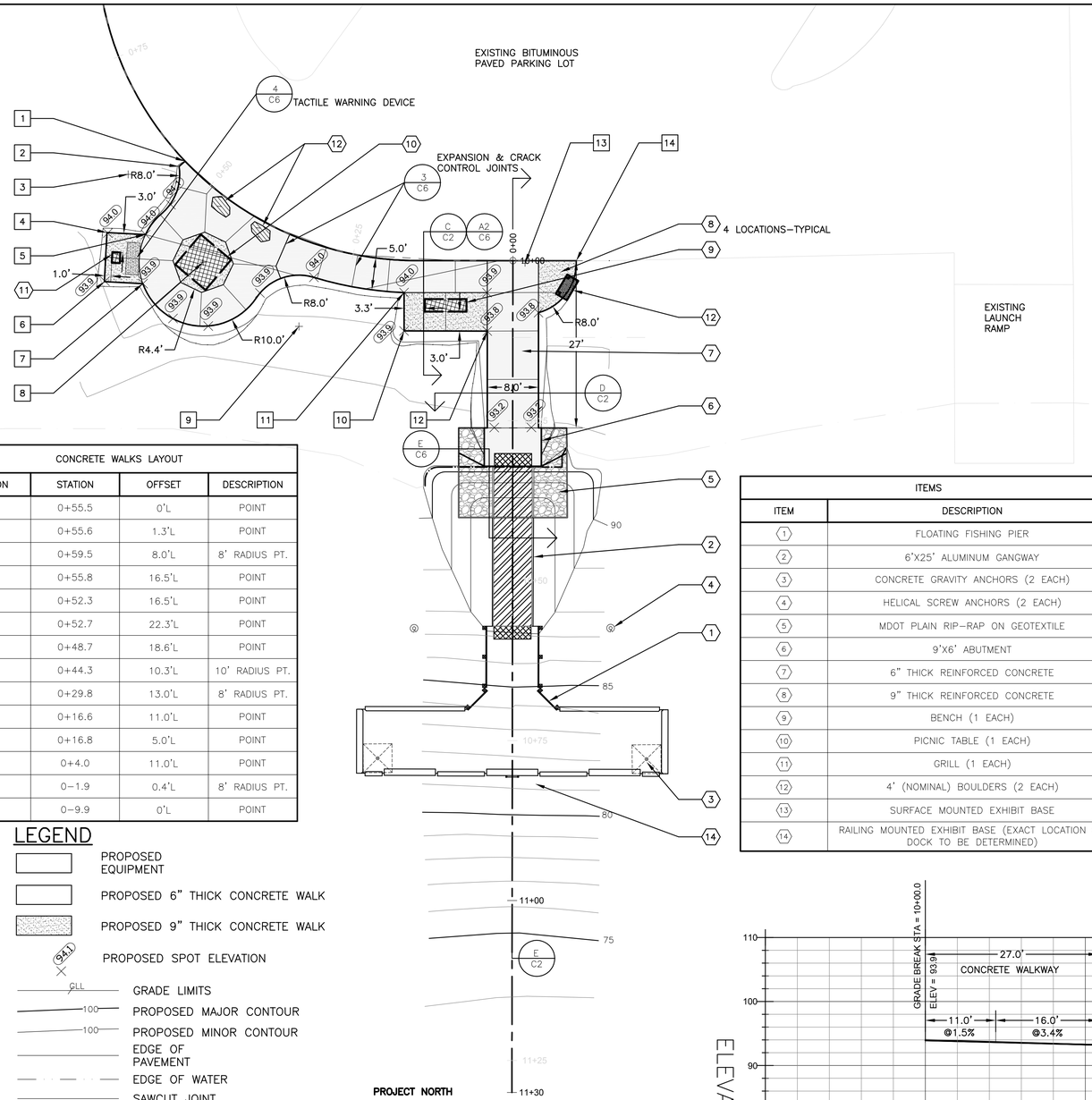

PROPOSED PLAN

SCALE 1"=10'

CONCRETE WALKS LAYOUT			
LOCATION	STATION	OFFSET	DESCRIPTION
1	0+55.5	0'L	POINT
2	0+55.6	1.3'L	POINT
3	0+59.5	8.0'L	8' RADIUS PT.
4	0+55.8	16.5'L	POINT
5	0+52.3	16.5'L	POINT
6	0+52.7	22.3'L	POINT
7	0+48.7	18.6'L	POINT
8	0+44.3	10.3'L	10' RADIUS PT.
9	0+29.8	13.0'L	8' RADIUS PT.
10	0+16.6	11.0'L	POINT
11	0+16.8	5.0'L	POINT
12	0+4.0	11.0'L	POINT
13	0–1.9	0.4'L	8' RADIUS PT.
14	0–9.9	0'L	POINT

ITEMS	
ITEM	DESCRIPTION
1	FLOATING FISHING PIER
2	6'X25' ALUMINUM GANGWAY
3	CONCRETE GRAVITY ANCHORS (2 EACH)
4	HELICAL SCREW ANCHORS (2 EACH)
5	MDOT PLAIN RIP–RAP ON GEOTEXTILE
6	9'X6' ABUTMENT
7	6" THICK REINFORCED CONCRETE
8	9" THICK REINFORCED CONCRETE
9	BENCH (1 EACH)
10	PICNIC TABLE (1 EACH)
11	GRILL (1 EACH)
12	4' (NOMINAL) BOULDERS (2 EACH)
13	SURFACE MOUNTED EXHIBIT BASE
14	RAILING MOUNTED EXHIBIT BASE (EXACT LOCATION ON DOCK TO BE DETERMINED)

LEGEND

- PROPOSED EQUIPMENT
- PROPOSED 6" THICK CONCRETE WALK
- PROPOSED 9" THICK CONCRETE WALK
- PROPOSED SPOT ELEVATION
- GRADE LIMITS
- PROPOSED MAJOR CONTOUR
- PROPOSED MINOR CONTOUR
- EDGE OF PAVEMENT
- EDGE OF WATER
- SAWCUT JOINT
- EXPANSION JOINT

SITE WORK NOTES

1. CONTRACTOR AND ENGINEER SHALL IDENTIFY APPROPRIATE CONSTRUCTION ACCESS ROUTES DURING PRE–CONSTRUCTION MEETING. CONTRACTOR & ENGINEER SHALL MARK UP CONSTRUCTION PLAN AND AGREE TO CONSTRUCTION ACCESS ROUTES FOR ALL MATERIALS AND EQUIPMENT. CONTRACTOR SHALL NOTIFY ENGINEER PRIOR TO ANY DEVIATION FROM ROUTES.
2. ALL CONSTRUCTION LAYOUT SHALL BE COMPLETED BY CONTRACTOR APPROVED BY ENGINEER PRIOR TO CONSTRUCTION. CONTRACTOR SHALL NOTIFY ENGINEER 48 HOURS PRIOR TO LAYING OUT ANY PORTION OF THE WORK.
4. REGRADE AND COMPACT EXISTING SUBBASE AS REQUIRED TO ACCOMMODATE THE FINAL GRADES SHOWN ON THE PLANS. BASE SHALL BE COMPACTED TO 95% OF ITS UNIT DENSITY.
5. FORM SIDEWALKS. (NOTIFY ENGINEER 48 HOURS PRIOR TO POURING SIDEWALKS). ENGINEER WILL INSPECT FORMS, REINFORCEMENT AND SUBBASE PRIOR TO PLACING CONCRETE.
6. RESTORE ALL DISTURBED LAWN AREAS & STOCKPILE AREAS TO ORIGINAL GRADE WITH 4" TOPSOIL, FERTILIZER, SEED AND MULCH. CONTRACTOR TO VERIFY WITH ENGINEER, THE LOCATION OF PROPOSED BOULDERS, PRIOR TO PLACEMENT AND ADJUST AS NECESSARY AS DIRECTED BY ENGINEER.
7. TOPSOIL STRIPPED FROM WITHIN THE CONSTRUCTION SITE MAY BE STOCKPILED FOR REUSE AT AREAS APPROVED BY THE ENGINEER. IF SUFFICIENT TOPSOIL IS NOT AVAILABLE FOR RESTORATION PURPOSES, THE CONTRACTOR SHALL IMPORT TOPSOIL TO THE PROJECT SITE AT NO CHANGE IN CONTRACT PRICE. TOPSOIL SUPPLIED BY CONTRACTOR SHALL BE APPROVED BY ENGINEER.

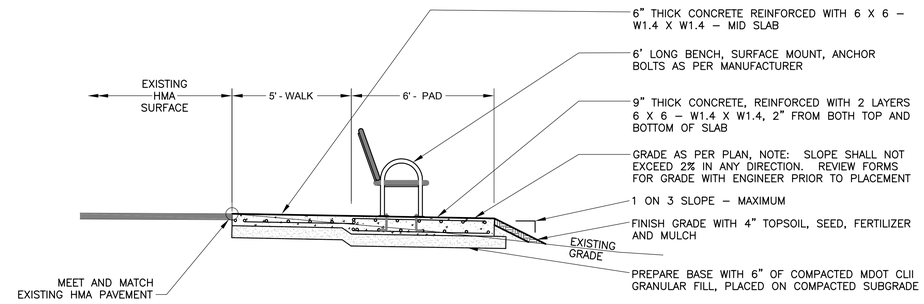

C CONCRETE WALKWAYS

NOT TO SCALE

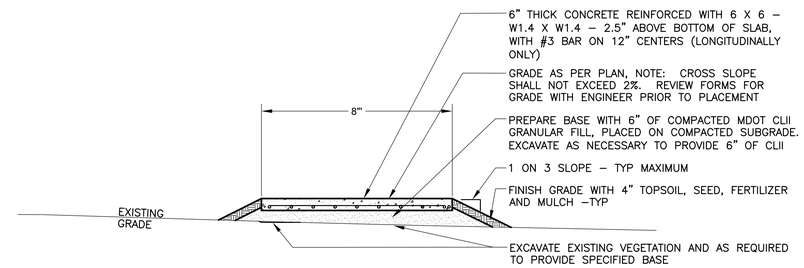

D 8' WIDE CONCRETE WALK STA 10+00–10+26.1 ONLY

NOT TO SCALE

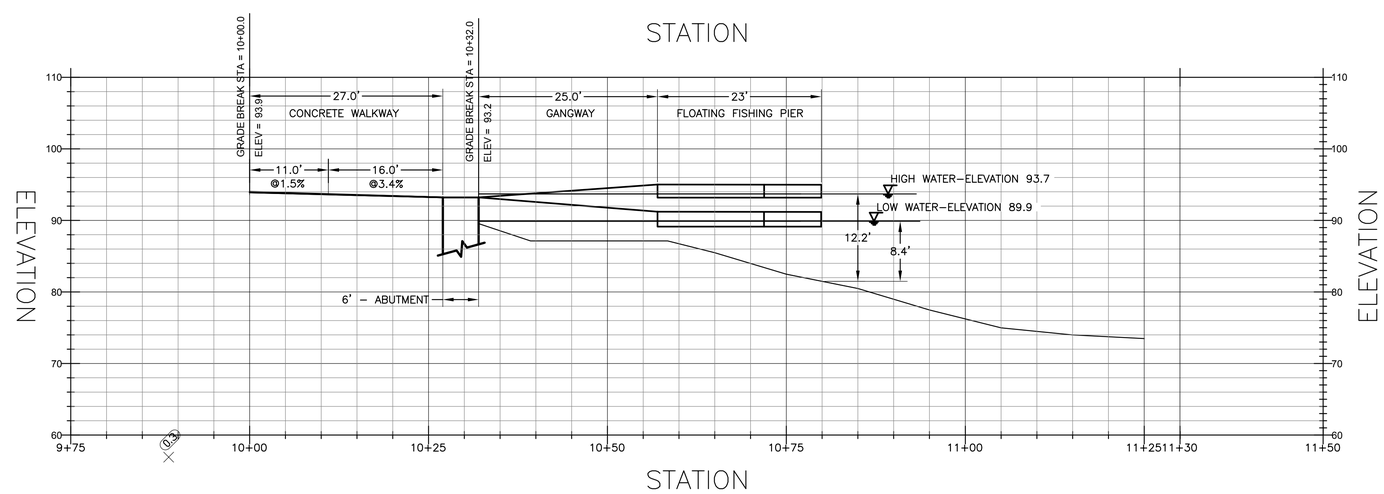

E CENTERLINE PROFILE

SCALE 1"=10'

72 HOURS
(3 WORKING DAYS)
BEFORE YOU DIG
CALL MISS DIG
800-482-7171
(TOLL-FREE)

STATE OF MICHIGAN
DEPARTMENT OF NATURAL RESOURCES
OFFICE OF LAND AND FACILITIES
DESIGN & CONSTRUCTION SECTION
P.O. BOX 30033 LANSING, MI 48909-7933
517.241.1919 VOICE 517.241.4278 FAX

Michigan DNR

10/21/09	BIDS & CONSTRUCTION	
08/28/09	95% OWNER REVIEW	
5/09	50% OWNER REVIEW	

FLOATING FISHING PIER
FORT WILKINS HISTORIC STATE PARK
KEEWENAW COUNTY

PROPOSED PLAN

PROJECT NO.	24-3207
INDEX	51220
PCA	65900
DRAWN BY	BDW
DESIGNED BY	BDW
PROJ. MGR.	BDW

C2

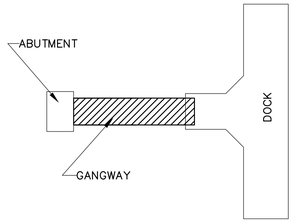

SUMMER (IN USE) LAYOUT

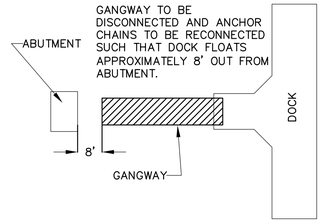

WINTERIZED LAYOUT

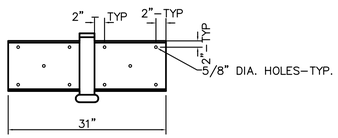

ANCHOR WELL FRONT VIEW

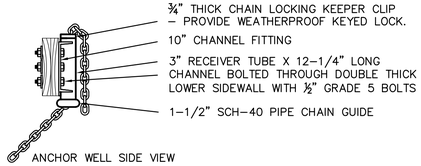

ANCHOR WELL SIDE VIEW

CHAIN ANCHOR WELL DETAIL

NOT TO SCALE

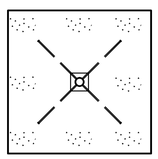

TOP VIEW

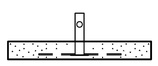

SIDE VIEW

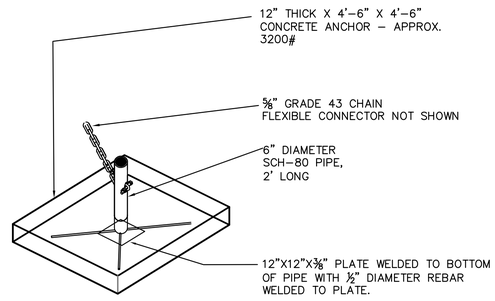

ISOMETRIC VIEW

CONCRETE ANCHOR DETAIL

NOT TO SCALE

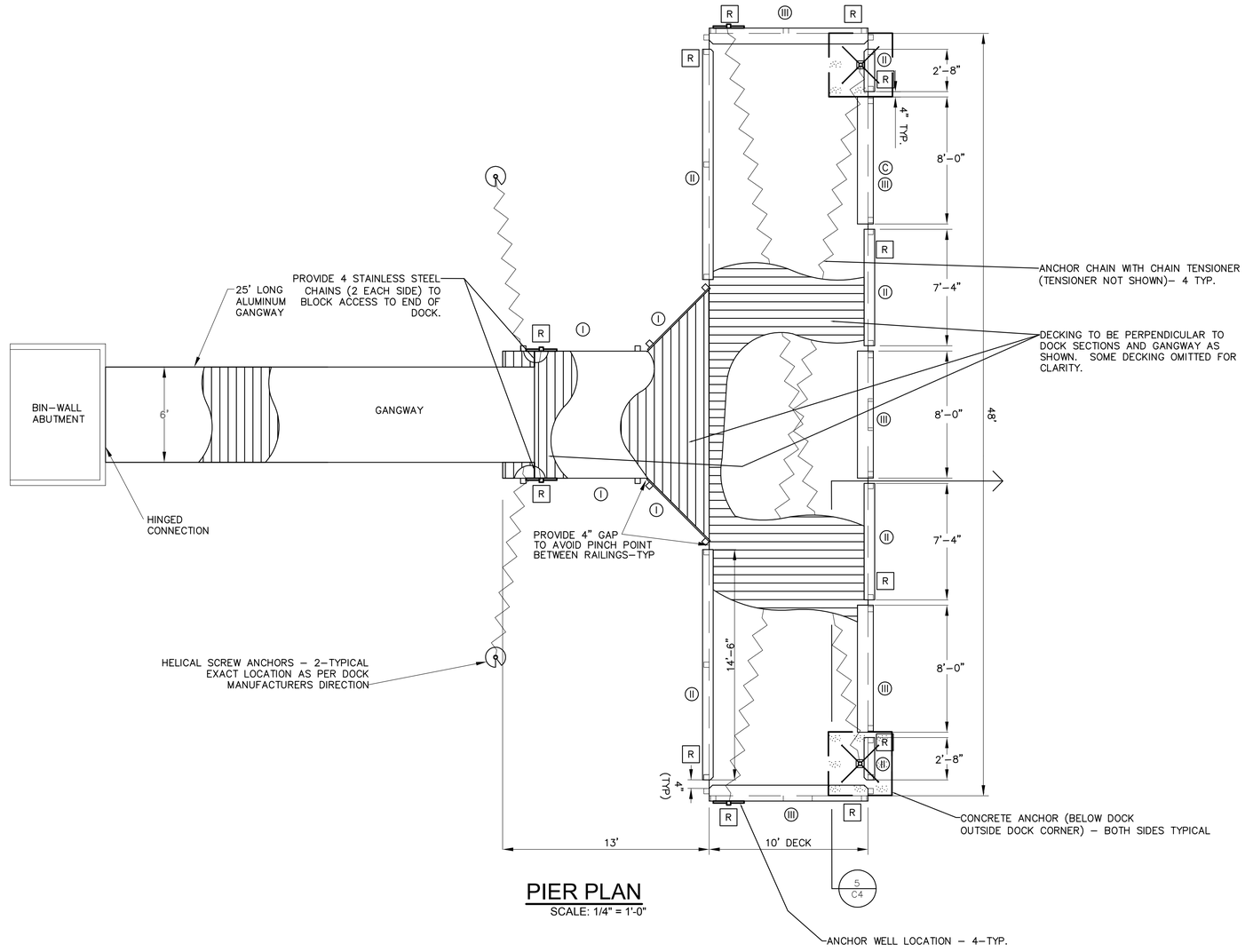

PIER PLAN

SCALE: 1/4" = 1'-0"

LEGEND

I, II, III — *REFER TO SHEET C–4 FOR RAILING DETAILS

R — INSTALL LIGHT REFLECTORS AT EACH LOCATION MARKED, 3 INCHES BELOW BOTTOM OF DECKING

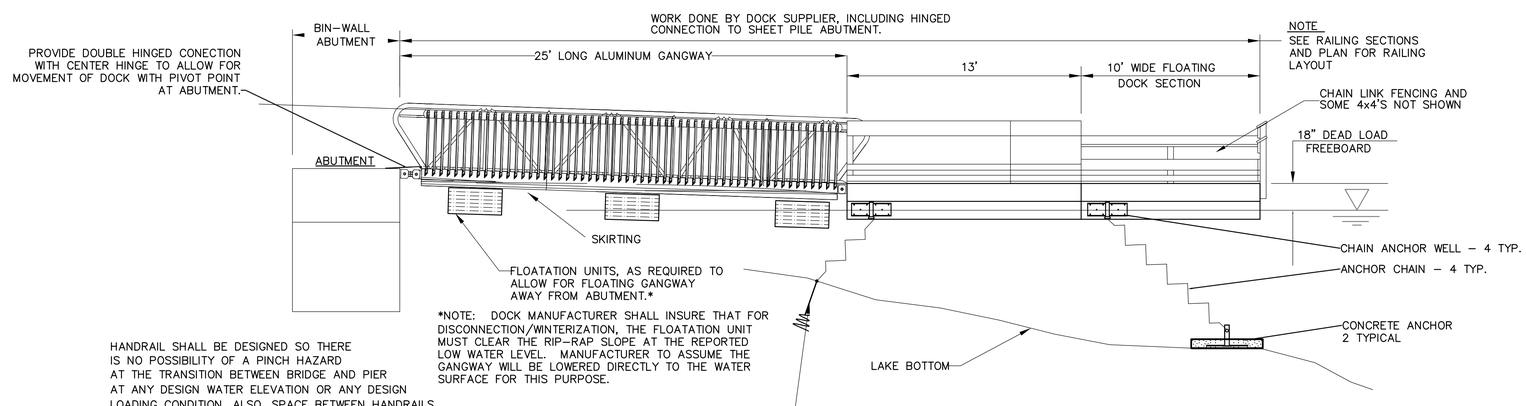

HANDRAIL SHALL BE DESIGNED SO THERE IS NO POSSIBILITY OF A PINCH HAZARD AT THE TRANSITION BETWEEN BRIDGE AND PIER AT ANY DESIGN WATER ELEVATION OR ANY DESIGN LOADING CONDITION. ALSO, SPACE BETWEEN HANDRAILS SHALL NOT BE GREATER THAN 4"

PIER ELEVATION PROFILE

SCALE: 1/4" = 1'-0"

72 HOURS
(3 WORKING DAYS)
BEFORE YOU DIG
CALL MISS DIG
800-482-7171
(TOLL-FREE)

STATE OF MICHIGAN
DEPARTMENT OF NATURAL RESOURCES
OFFICE OF LAND AND FACILITIES
DESIGN & CONSTRUCTION SECTION
P.O. BOX 30033 LANSING, MI 48909-7933
517.241.1919 VOICE 517.241.4278 FAX

Michigan DNR

10/21/09	BIDS & CONSTRUCTION	
08/28/09	95% OWNER REVIEW	
5/09	50% OWNER REVIEW	

FLOATING FISHING PIER
FORT WILKINS HISTORIC STATE PARK
KEEWENAW COUNTY

FLOATING PIER PLAN & ELEVATION

PROJECT NO.	24-3207
INDEX	51220
PCA	65900
DRAWN BY	BDW
DESIGNED BY	BDW
PROJ. MGR.	BDW

C3

NOTE: ALL 2x LUMBER TO HAVE ROUNDED EDGES

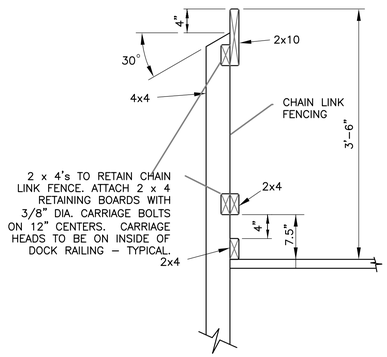

TYPICAL 42" HIGH RAILING

1 DETAIL
SCALE: 1" = 1'-0"

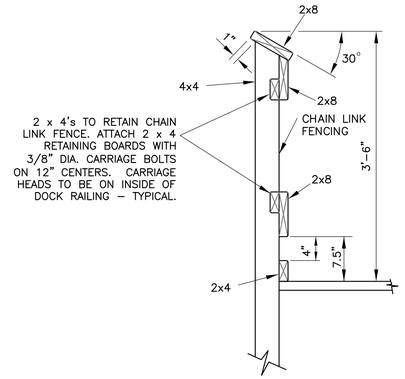

TYPICAL 42" HIGH SLANTED RAILING

II DETAIL
SCALE: 1" = 1'-0"

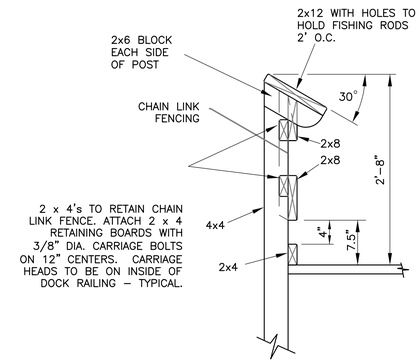

TYPICAL 32" HIGH ACCESSIBLE RAILING

III DETAIL
SCALE: 1" = 1'-0"

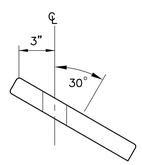

FISHING ROD HOLDER
DETAIL
SCALE: 1" = 1'-0"

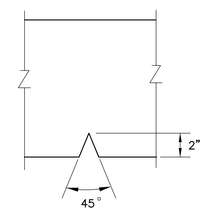

FISHING ROD NOTCH
DETAIL
SCALE: 1" = 1'-0"

TEXT HERE
TEXT HERE

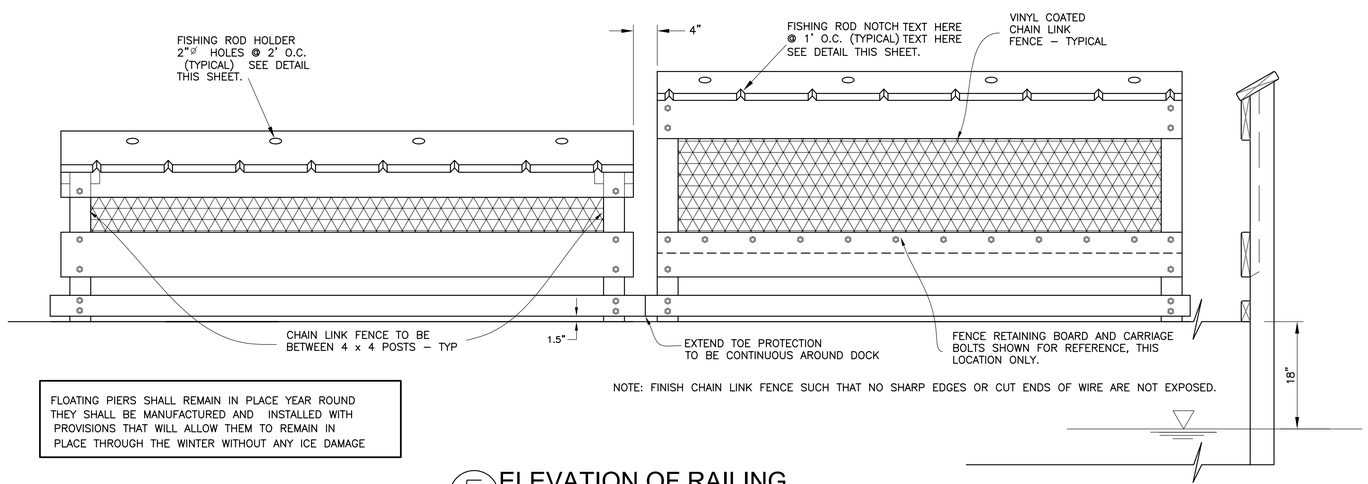

NOTE: FINISH CHAIN LINK FENCE SUCH THAT NO SHARP EDGES OR CUT ENDS OF WIRE ARE NOT EXPOSED.

FLOATING PIERS SHALL REMAIN IN PLACE YEAR ROUND THEY SHALL BE MANUFACTURED AND INSTALLED WITH PROVISIONS THAT WILL ALLOW THEM TO REMAIN IN PLACE THROUGH THE WINTER WITHOUT ANY ICE DAMAGE

5 ELEVATION OF RAILING
SCALE: 1" = 1'-0"

72 HOURS
(3 WORKING DAYS)
BEFORE YOU DIG
CALL MISS DIG
800-482-7171
(TOLL-FREE)

STATE OF MICHIGAN
DEPARTMENT OF NATURAL RESOURCES
OFFICE OF LAND AND FACILITIES
DESIGN & CONSTRUCTION SECTION
P.O. BOX 30033 LANSING, MI 48909-7933
517.241.1919 VOICE 517.241.4278 FAX

Michigan DNR

10/21/09	BIDS & CONSTRUCTION
08/20/09	95% OWNER REVIEW
5/09	50% OWNER REVIEW

FLOATING FISHING PIER
FORT WILKINS
HISTORIC STATE PARK
KEEWENAW COUNTY

FLOATING PIER
RAILING DETAILS

PROJECT NO.	24-3207
INDEX	51220
PCA	65900
DRAWN BY	BDW
DESIGNED BY	BDW
PROJ. MGR.	BDW

C4
5 OF 7

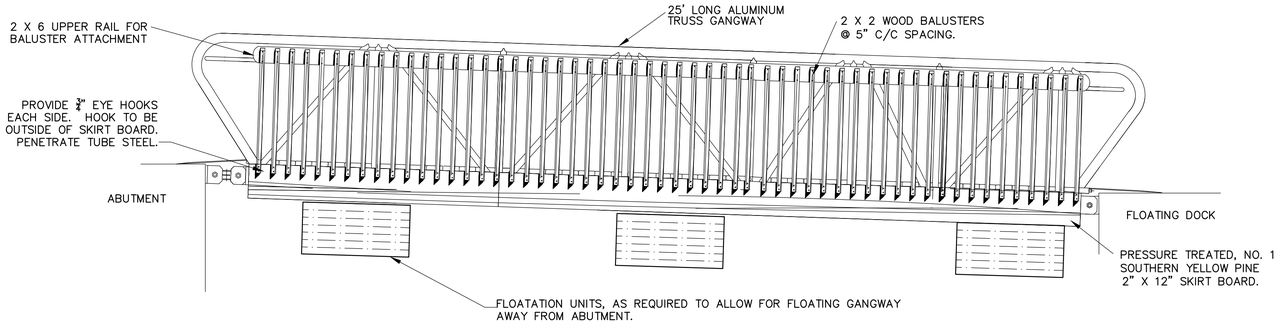

ELEVATION W/BALLUSTERS

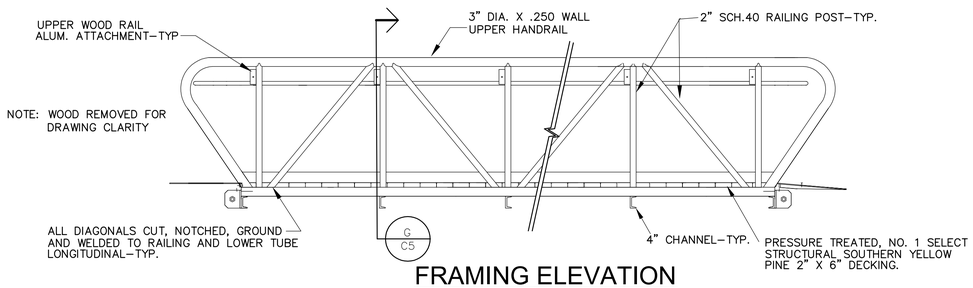

FRAMING ELEVATION

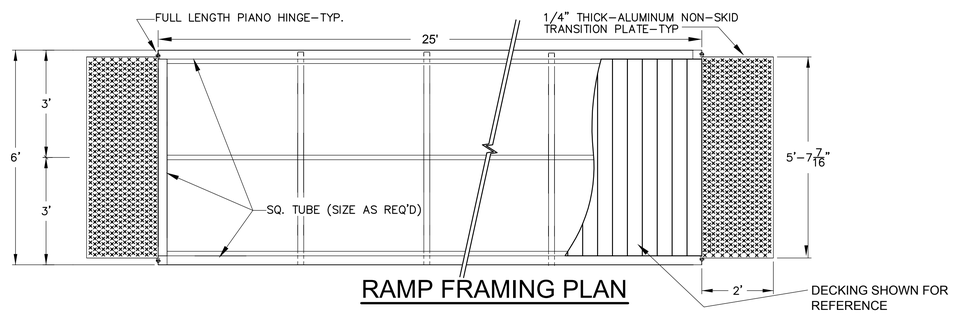

RAMP FRAMING PLAN

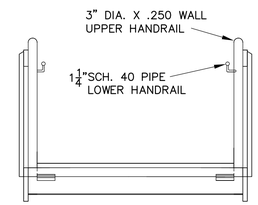

END VIEW

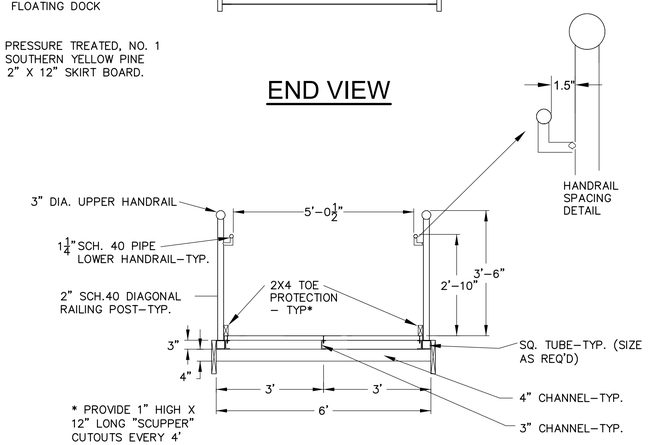

G RAMP SECTION

RAMP AND RAILING DETAILS

NOT TO SCALE

NOTE: REFERENCE ONLY

STRUCTURE SHOWN IS TO DEPICT DESIRED DESIGN SCHEMATIC. EXACT DESIGN TO BE DETERMINED BY THE RAMP MANUFACTURER.

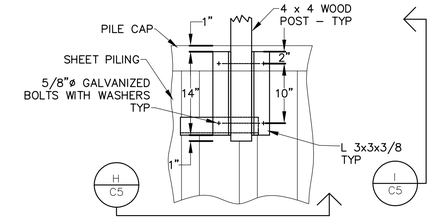

6 ELEVATION @ MID-WALL

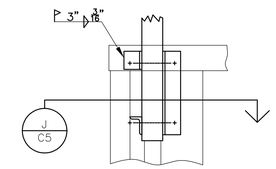

7 ELEVATION @ CORNER

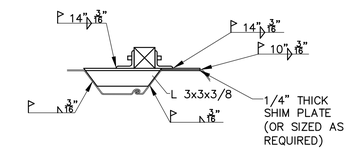

H SECTION

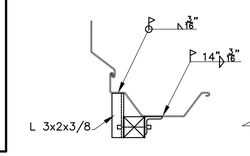

J SECTION

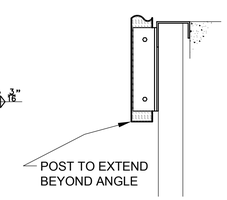

I SECTION

RAILING POST CONNECTION DETAILS

NOT TO SCALE

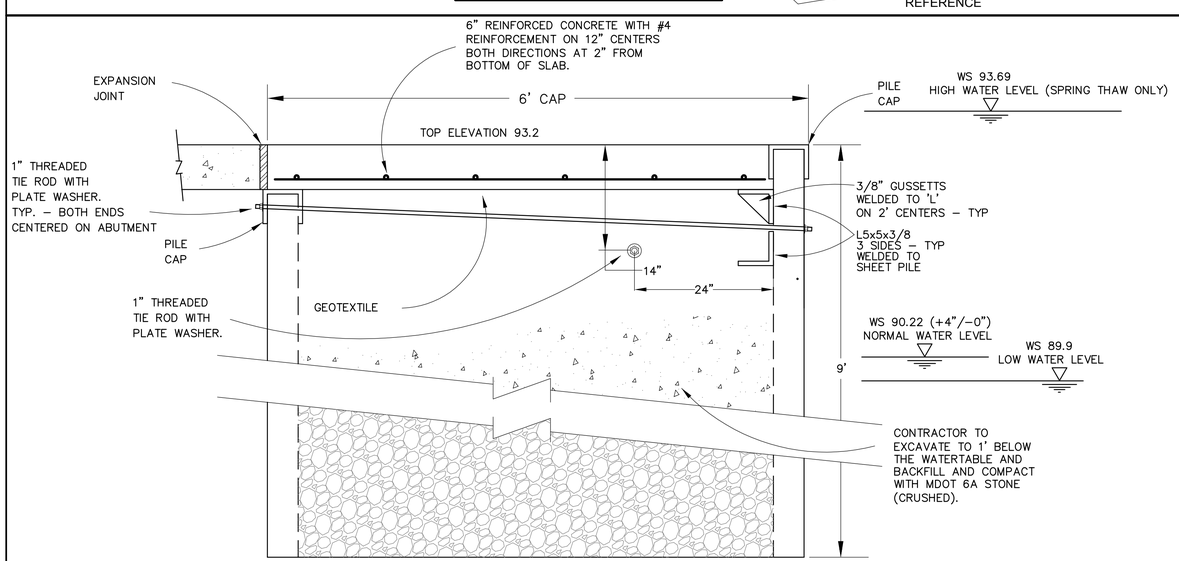

K ABUTMENT SECTION

NOT TO SCALE

ABUTMENT & FLOATING PIER NOTES

1. THE LENGTH OF THE GANGWAY IS PROPOSED TO PROVIDE A –7.5% SLOPE AT THE LOW WATER ELEVATION INDICATED ON THE DRAWING AND A +7.5% SLOPE AT HIGH WATER. THE ASSUMED FREEBOARD USED FOR THIS CALCULATION IS 18". THE CONTRACTOR IS RESPONSIBLE TO PROVIDE SLOPES THAT WILL NOT EXCEED 8.33% AT THE WATER LEVEL EXTREMES SHOWN.
2. ALL WORK SHALL BE DONE IN ACCORDANCE WITH THE LATEST "AMERICANS WITH DISABILITIES ACT – ACCESSIBILITY GUIDELINES FOR BUILDINGS AND FACILITIES".
3. THE CONTRACTOR SHALL PROVIDE THE DESIGN AND MAKE SUCH ADDITIONS/MODIFICATIONS TO THE ABUTMENT FOR ADEQUATE STRUCTURAL ATTACHMENT OF THE RAMP TO THE ABUTMENT.
4. THE STEEL SHEETING SHALL BE DRIVEN TO THE DEPTHS SHOWN. SHOULD THE SHEETING REACH REFUSAL PRIOR TO THE PROPOSED DEPTH, CONTRACTOR SHALL NOTIFY THE ENGINEER FOR REVIEW AND APPROVAL OF THE DRIVEN DEPTHS PRIOR TO CUTOFF.
5. CONTRACTOR TO ENSURE THAT RIP–RAP PLACEMENT AT THE FACE OF THE ABUTMENT IS PLACED SUCH THAT THE GANGWAY CAN BE LOWERED AT THE LOWEST WATER LEVEL AND NOT INTERFERE WITH THE FLOATATION DEVICES ON THE GANGWAY.

72 HOURS
(3 WORKING DAYS)
BEFORE YOU DIG
CALL MISS DIG
800-482-7171
(TOLL-FREE)

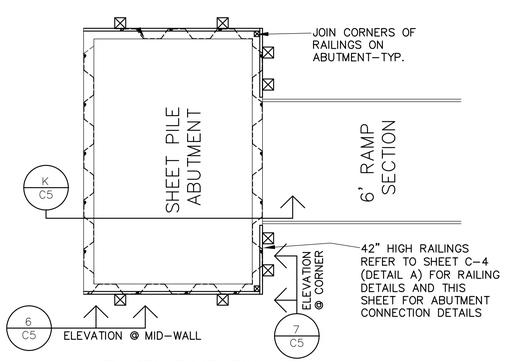

ABUTMENT PLAN

STATE OF MICHIGAN
DEPARTMENT OF NATURAL RESOURCES
OFFICE OF LAND AND FACILITIES
DESIGN & CONSTRUCTION SECTION
P.O. BOX 30033 LANSING, MI 48909-7933
517.241.1919 VOICE 517.241.4278 FAX

Michigan DNR

10/21/09	BIDS & CONSTRUCTION	
08/28/09	95% OWNER REVIEW	
5/09	50% OWNER REVIEW	

FLOATING FISHING PIER
FORT WILKINS HISTORIC STATE PARK
KEEWENAW COUNTY

SHEET TITLE

PROJECT NO.	24-3207
INDEX	51220
PCA	65900
DRAWN BY	BDW
DESIGNED BY	BDW
PROJ. MGR.	BDW

C5
6 OF 7

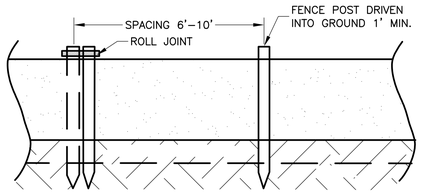

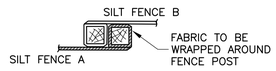

ROLL JOINTS

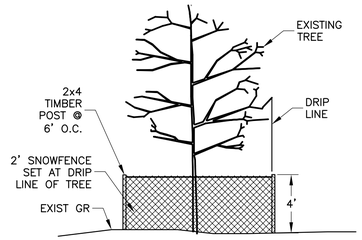

TREE PROTECTION MEASURES TO BE USED AT ALL TREES SHOWN ON THE SITE PLAN AND ANY THAT MAY BE DAMAGED IN ANY WAY BY CONSTRUCTION ACTIVITIES. FENCING SHALL BE PLACED PRIOR TO THE START OF CONSTRUCTION ACTIVITY AND REMOVED ONLY WHEN CONSTRUCTION IS COMPLETE.

2 TREE PROTECTION

NOT TO SCALE

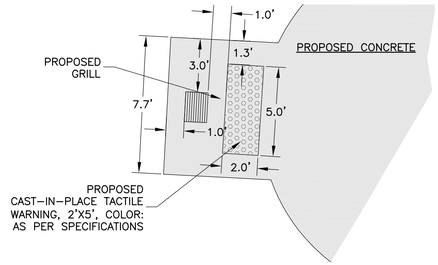

4 TACTILE WARNING PAD

NOT TO SCALE

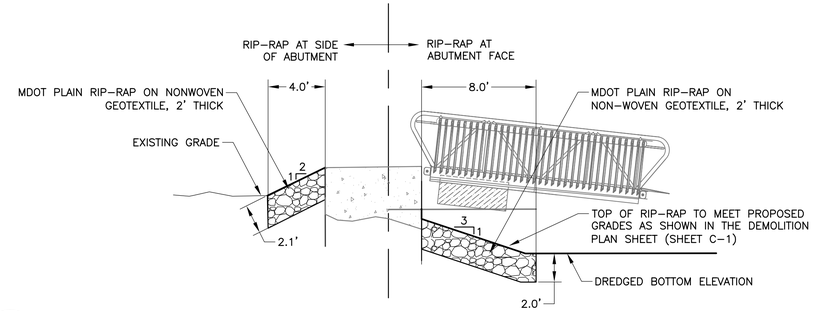

E RIP–RAP SECTION

NOT TO SCALE

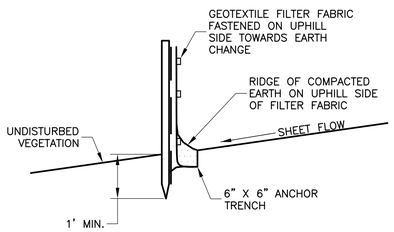

1 SILT FENCE

NOT TO SCALE

SILT FENCE NOTES

1. INSTALL PARALLEL TO A CONTOUR.
2. SILT FENCE SHALL BE MADE OF WOVEN GEOTEXTILE FABRIC.
3. DIG A 6" TRENCH ALONG THE AREA WHERE THE FENCE IS TO BE INSTALLED.
4. PLACE 6" OF THE SILT FENCE BOTTOM FLAP INTO THE TRENCH.
5. BACKFILL THE TRENCH WITH SOIL AND COMPACT THE SOIL ON BOTH SIDES. CREATE A SMALL RIDGE ON THE UP–SLOPE SIDE OF THE FENCE.
6. 6. INSTALL WOODEN STAKES 6 – 10' APART AND DRIVE INTO THE GROUND A MINIMUM OF 12".
7. STAPLE THE GEOTEXTILE FABRIC TO THE WOODEN STAKES.
8. JOIN SECTIONS OF SILT FENCE BY WRAPPING ENDS TOGETHER (SEE DRAWING).
9. INSPECT FREQUENTLY AND IMMEDIATELY AFTER EACH STORM EVENT. CHECK SEVERAL TIMES DURING PROLONGED STORM EVENTS. IF NECESSARY, REPAIR IMMEDIATELY.
10. IF THE SEDIMENT HAS REACHED 1/3 THE HEIGHT OF THE FENCE, THE SOIL SHALL BE REMOVED AND DISPOSED OF IN A STABLE UPLAND SITE.
11. THE FENCE SHALL BE RE–INSTALLED IF WATER IS SEEPINGUNDERNEATH IT OR IF THE FENCE HAS BECOME INEFFECTIVE.
12. SILT FENCE SHALL BE REMOVED ONCE VEGETATION IS ESTABLISHED AND UP–SLOPE AREA HAS STABILIZED.

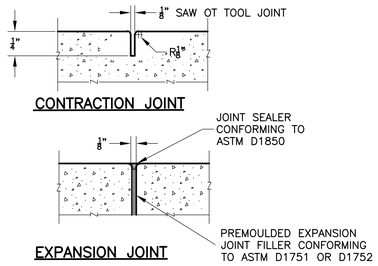

3 CONC. SIDEWALK JOINTS

NOT TO SCALE

ADDITIVE ALTERNATE #3 – PERVIOUS CONCRETE OPTION

1. ADDITITVE ALTERNATE #4 IS FOR PERVIOUS CONCRETE TO BE USED IN LIEU OF 6" AND 9" THICK CONCRETE WALKWAYS, WITH THE EXCEPTION OF THE ABUTMENT CAP, WHICH WILL REMAIN AS SHOWN ON THE PLANS.
2. CONTRACTOR SHALL REPLACE THE PAVEMENT SECTIONS SHOWN WITH THE SECTION WHICH FOLLOWS THESE NOTES.
3. PERVIOUS CONCRETE SPECIFICATION SHALL BE REFERENCED FOR THIS WORK, SHOULD THE OWNER CHOOSE TO INCORPORATE THIS WORK INTO THE CONTRACT.
4. SHOULD PERVIOUS CONCRETE BE USED, CONTRACTOR SHALL USE EMBEDDED TYPE MOUNTING FOR PICNIC TABLE, BENCH, GRILL AND UPLAND SIGNS. INSTALLATION TO BE AS PER MANUFACTURERS RECOMMENDATIONS. (THIS IN LIEU OF SURFACE MOUNTED AS IN BASE BID).

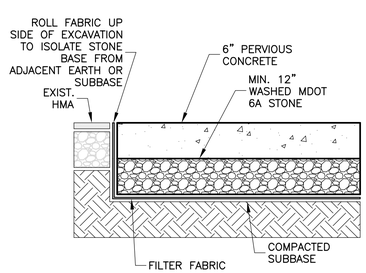

A2 PERVIOUS CONCRETE

NOT TO SCALE

72 HOURS
(3 WORKING DAYS)
BEFORE YOU DIG
CALL MISS DIG
800-482-7171
(TOLL-FREE)

ADDITIVE ALTERNATE #1 – FISH HABITAT BUNDLES

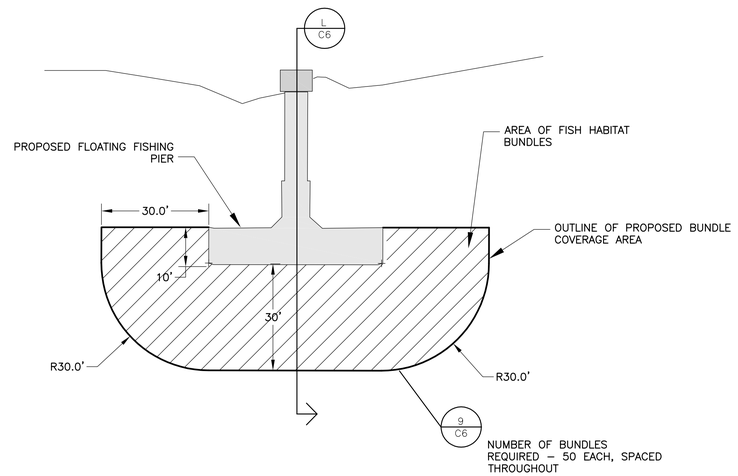

8 PROPOSED FISH HABITAT BUNDLES PLAN

NOT TO SCALE

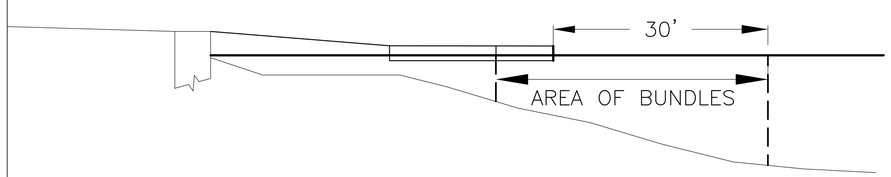

L PROPOSED FISH HABITAT BUNDLES PROFILE

NOT TO SCALE

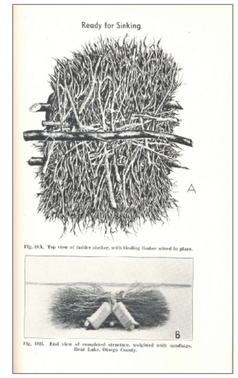

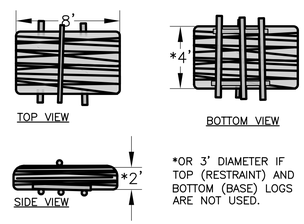

*OR 3' DIAMETER IF TOP (RESTRAINT) AND BOTTOM (BASE) LOGS ARE NOT USED.

9 BUNDLE DETAILS

NOT TO SCALE

BUNDLE CONSTRUCTION AND PLACEMENT NOTES

1. BUNDLE MATERIAL SHALL BE GREEN CUT HARDWOOD. THE APPROXIMATE FINISHED BUNDLE WEIGHT SHOULD BE 100 POUNDS.
2. BUNDLED MATERIAL SHALL BE A MIX OF SIZES WITH A MINIMUM END DIAMETER OF 1.5" AND BE PREDOMINANTLY END–OF–BRANCH (TOPS).
3. BUNDLE TIES SHALL BE MULTIPLE WRAPS OF #12 UNCOATED STEEL WIRE.
4. ANCHORING OF BUNDLES TO BE USING CLEAN SAND OR GRAVEL FILLED NATURAL CANVAS BAGS. WEIGHT OF BAGS SHALL BE AS REQUIRED TO SECURE THE BUNDLES IN PLACE ON THE LAKE BOTTOM.
5. SPACE BUNDLES AS DIRECTED BY THE ENGINEER/OWNER. BUNDLES WILL BE SPACED IN THE AREA IDENTIFIED IN THE PLANS.
6. IF USED TOP RESTRAINT LOG AND BOTTOM (BASE) LOGS SHALL BE A MINIMUM 2" DIAMETER. NOTE: RESTRAINT AND BASE LOGS MAY BE DELETED AND A 'ROUND' BUNDLE MAY BE CONSTRUCTED.

STATE OF MICHIGAN
DEPARTMENT OF NATURAL RESOURCES
OFFICE OF LAND AND FACILITIES
DESIGN & CONSTRUCTION SECTION
P.O. BOX 30033 LANSING, MI 48909-7933
517.241.1919 VOICE 517.241.4278 FAX
Michigan DNR

10/21/09	BIDS & CONSTRUCTION	
08/28/09	95% OWNER REVIEW	
5/09	50% OWNER REVIEW	

FLOATING FISHING PIER
FORT WILKINS HISTORIC STATE PARK
KEEWENAW COUNTY

DETAILS & ALTERNATES

PROJECT NO.	24-3207
INDEX	51220
PCA	65900
DRAWN BY	BDW
DESIGNED BY	BDW
PROJ. MGR.	BDW

C6
7 OF 7