MICHIGAN DEPARTMENT OF NATURAL RESOURCES - OFFICE OF LAND AND FACILITIES

MINOR CONSTRUCTION PROJECT BID PACKAGE

Issued by Authority of The Michigan Department of Natural Resources

This is an invitation for a sealed bid for furnishing labor, material, supplies and equipment to complete the project detailed on the Proposal and Contract Form and in the attached specifications. Bid security performance bond and labor and material bond **are not** required for this project.

The State reserves the right to award to that responsive and responsible bidder offering the best value to the State for the quality of the service to be supplied, conformity with specifications and suitability to the requirements of the State, or to reject any and all bids in whole or in part if the best interest of the State will be served.
It is the vendor's responsibility to read, understand and follow the Instructions To Bidders, General Conditions and General Requirements attached to this packet.

Questions regarding these terms should be directed to:	
The Issuing Officer: **PATRICK AVENDT**	Telephone No.: **(517) 373-9902**
Address: **OFFICE OF LAND AND FACILITIES** **MICHIGAN DEPARTMENT OF NATURAL RESOURCES** **STEVENS T. MASON BUILDING – 8TH FLOOR** **530 WEST ALLEGAN STREET** **P.O. BOX 30033** **LANSING, MICHIGAN 48909** (This Zip Code for P.O. Box only.) (Street Address Zip Code is 48933.)	

Questions regarding the project should be directed to:		
Site Contact/Project Manager's Name: MS. SUE ROSE	Telephone Number: (231) 582-7523	
Division/Office Name: DNR PARKS AND RECREATION DIVISION		
Managing Unit Name: YOUNG STATE PARK		
Street Address of Park Headquarters: 02280 BOYNE CITY ROAD		
City: BOYNE CITY	State: MI	ZIP: 49712

This Bid Package contains:
A. This instructional cover sheet
B. Three copies of the "Proposal and Contract for DNR" (Form PR-1625).
C. Instructions to Bidders, General Conditions, General Requirements
D. Technical specification and other attachments, if any required.
E. "Sealed Bid" Envelope (Addressed to the MICHIGAN DEPARTMENT OF NATURAL RESOURCES)

THE ATTACHED CONTRACT DOCUMENTS ARE FOR: Bid Number**: 24-3211**

PROJECT LOCATION (location where the work is being done)	COUNTY:
FISHERMAN'S ISLAND STATE PARK -	CHARLEVOIX
NAME OF CONSTRUCTION PROJECT: **RE-BID:** DRILL ONE NEW WATER WELL & RELATED ITEMS	
MANDATORY PRE-BID OPEN HOUSE: NONE SCHEDULED – However, it is highly recommended that potential bidders visit the site prior to bidding.	

BID OPENING →	DATE: **FRIDAY, APRIL 17, 2009**	TIME (local time): **2:00 P.M.**

TO BID FOR THIS WORK, SUBMIT A PROPOSAL FOLLOWING THE INSTRUCTIONS BELOW.

1) Complete the "bidder's" portion on the "Proposal and Contract for DNR" (Form PR-1625).
   - **DO NOT** change the bid form or qualify the bid. Only bid on the contract as written. If the bidder wishes to alter the bid price, it may be done by sending in the amount of change (addition or reduction) to the original bid by the bid opening time. The original bid sum must not be revealed. Bid prices must be good for sixty days.
2) If an Addendum was issued, confirm receipt by returning two signed copies.
3) Seal two completed copies of the "Proposal and Contract for DNR" (Form PR-1625) in an envelope.
4) On the "Sealed Bid" Envelope provided, ensure that the following information is completed on the label:
   a) Bid number b) Bid opening date and time c) That the actual bid is enclosed

- It is the responsibility of the bidder to ensure that correctly identified bids are delivered on time. The Michigan DNR can not be responsible for mail delivery services.
- On or before the due date and time specified on the "Proposal and Contract for DNR" (Form PR-1625), sealed bids must be received and time stamped at 530 WEST ALLEGAN STREET-8th FLOOR, LANSING MI 48933, to be considered as on time.
- The bids will be publicly opened and read aloud. Bid results will be available to the public after the opening.

MICHIGAN DEPARTMENT OF NATURAL RESOURCES – OFFICE OF LAND AND FACILITIES

PROPOSAL AND CONTRACT for DNR

Submittal of this information constitutes a valid proposal as required by Authority of Act 431, PA 1984, to provide the services as specified.

BID OPENING DATE and TIME:	CONTACT INFORMATION FOR EXAMINATION OF PREMISES AND WORKING CONDITIONS AT THE SITE		**For DNR Issuing Officer**
FRIDAY, APRIL 17, 2009 2:00 p.m. Local Time	Site Contact/Project Manager's Name: MS. SUE ROSE	Telephone Number: (231) 582-7523	CONTRACT NO.
	PROJECT NUMBER: **24-3211**		COMMODITY CODE:

DEPARTMENT(751):	DIVISION /OFFICE NAME	MANAGING UNIT NAME
DNR -	PARKS AND RECREATION DIVISION	YOUNG STATE PARK

PROJECT LOCATION (WORK SITE)	PROJECT NAME
FISHERMAN'S ISLAND STATE PARK	**RE-BID:** DRILL A NEW WATER WELL & RELATED ITEMS

SCOPE OF WORK: The Work to be completed under this contract includes: Providing all labor, materials, and equipment to drill one new water well with new hand pump, and related items at the Fisherman's Island State Park as shown on the drawings and specified herein, located in Charlevoix County, Michigan. Please contact Project Manager to determine desired location for new well. Contractor is responsible for all necessary permits. The new well will require a Type II well permit from the county.

Time of Completion: Upon acceptance of the Proposal and Contract by the State, the Contractor agrees to complete all work **by the end of the working day Friday, May 15, 2009.**

BIDDER's Section: (See attached Instructions To Bidders, General Conditions And General Requirements.)

- Do Not Alter or Qualify This Proposal and Contract. This Proposal May Be Rejected If This Form Is Altered or Qualified.

BIDDER 'S NAME AND COMPLETE ADDRESS	TELEPHONE NUMBER
STREET ADDRESS	FEDERAL I.D. NUMBER (if none, SOCIAL SECURITY NUMBER) (Protected information required for processing payments)
CITY STATE ZIP CODE	

Base Proposal Sum: $ _____ (This figure shall be valid for a period of sixty (60) days from the Bid Opening Date.)

NOTE: BID GUARANTEE & BONDS ARE NOT REQUIRED ON THIS PROJECT.

Bidder Acknowledges receipt of the following addenda: _____ Dated: _____

We propose to furnish all labor, materials, equipment, tools, and services required to complete the work in accordance with the specifications and conditions contained herein in consideration of the sum(s) stated above and agree that this document and attached General Terms and Requirements will constitute the contract if accepted by the State.

Signatures and Authorizations: *Bids may be rejected as being incomplete without this authorization*

- ***Corporations*** *shall include with the bid, a copy of the resolution giving the person signing the bid, power to bind the company in a legal contract.*
- ***Partnerships*** *may have all partners sign this "Proposal and Contract for DNR" (Form PR-1625) or may submit a Power of Attorney.*
- ***Sole proprietorships*** *need only to have their signatures witnessed.*

BIDDER'S SIGNATURE (s)	DATE
WITNESS' SIGNATURE	DATE

Submit 2 copies of this Proposal To:

OFFICE OF LAND AND FACILITIES
MICHIGAN DEPARTMENT OF NATURAL RESOURCES
STEVENS T. MASON BUILDING – 8TH FLOOR
530 WEST ALLEGAN STREET
P.O. BOX 30033
LANSING, MICHIGAN 48909 (This Zip Code for P.O. Box only.)

ACCEPTANCE: THIS PROPOSAL IS ACCEPTED BY THE STATE OF MICHIGAN

DNR ISSUING OFFICER'S SIGNATURE	DATE
WITNESS' SIGNATURE	DATE

INSTRUCTIONS TO BIDDERS

1. **Preparation of Bid:** Execute bid fully and properly. Submit in duplicate on this form in a sealed envelope to this office.

2. **Signatures:** All bids, notifications, claims, and statements must be signed as follows:

   a. Corporations: Signature of official shall be accompanied by a certified copy of the resolution of the Board of Directors authorizing the individual signing to bind the corporation.

   b. Partnerships: Signature of one partner shall be accompanied by a **certified** copy of the power of attorney authorizing the individual signing to bind all partners. If bid is signed by **all** partners, no authorization is required.

   c. Individual: No authorization is needed. Each signature must be witnessed.

3. The bidder acknowledges the right of the owner to reject any or all bids and to waive any informality or irregularity in any bid received. In addition. the bidder recognizes the right of the owner to reject a bid:

   a. if the bid is in any way incomplete or irregular;

   b. if the bidder's performance as a contractor was unsatisfactory under a prior contract for the construction, repair, modification or demolition of a facility with the owner, or a contractor in privity of contract with the owner, which was funded, directly or indirectly, by the owner;

4. It is the intent of the owner to award a contract to the lowest responsible bidder, provided the bid has been submitted in accordance with the requirements of the bidding documents, and does not exceed the funds available.

5. Individuals needing special services to fully participate in the bidding process due to a physical challenge may contact the building superintendent or the facility manager.

6. **Electronic Funds Transfer Payment** Public Act 533 of 2004 requires all vendors doing business with the State of Michigan to receive payment by electronic funds transfer (EFT) for services and goods provided to the State. Please log on to the contractor and payment website at www.michigan.gov/cpexpress to register your company or you may contact the C&P Express Help Desk toll-free at 888-734-9749

7. **Interpretation of Contract Documents:** If any person contemplating submitting a bid for this project is in doubt as to the true meaning of any part of the drawings, specifications or other contract documents, he/she may submit a written request to the director for an interpretation not later than nine days prior to due date of bids. The person submitting the request will be responsible for its prompt delivery. An interpretation of the documents will be made by the requesting office and an addendum issued and mailed or delivered to each person who has received a set of drawings and specifications. All addenda issued shall be made a part of the contract requirements. The state will not be responsible for any other explanation or interpretation of the contract documents.

8. **Substitution of Materials:** Any bidder wishing to use manufacturers or materials other than those specified shall submit a written request to the director not later than nine days prior to due date for bids. Request shall be accompanied by product data to permit evaluation and comparison with specified products or materials. The person submitting the request will be responsible for its prompt delivery. An examination and evaluation of product data will be made by the state unit and, if found acceptable, an addendum will be issued and mailed or delivered to each person who has received a set of drawings and specifications. All addenda issued shall be made a part of the contract requirements.

9. **Time of Completion:** Upon acceptance by the state of the Proposal and Contract, the contractor agrees to complete all work required in the time frame required on the Proposal and Contract.

10. **Michigan Products and Recycled Products:** All contractors and suppliers are encouraged to provide Michigan-made products and/or recycled products whenever possible where price, quality, and performance are equal to, or superior to, non-Michigan products and the requirements of the contract documents.

11. **Rejection:** The state reserves the right to reject any bids and to waive any defects in bids.

12. **Contract:** Upon acceptance by the state, this document will constitute the contract and the executed duplicate will be returned to the contractor. The contract shall not be in force until the contractor has complied with all of the requirements of insurance.

GENERAL CONDITIONS

1. **Definitions: "State",** the State of Michigan; "**Director**", the director of the State Unit or his/her authorized representative; "**State Unit**", any state department, board, commission or institution; "**Contractor**", the bidder whose proposal is accepted by the state; "**Notification**", written notice delivered in person or by mail; "**Contract Documents**", this document and supplemental specifications and drawings.

2. **Unfair Labor Practice:** Public Act No. 278 of 1980 prohibits the state from awarding a contract or subcontract to an employer who has been found in contempt of court by a Federal Court of Appeals, on not less than three occasions involving different violations during the preceding seven years, for failure to correct an unfair labor practice as prohibited by Section 8 of Chapter 372 of the National Labor Relations Act, 29 U.S.C. 158. A contractor for the state may not, in relation to that contract subcontract with such an employer.

3. **Safety Regulations:** The contractor shall conform to the "General Safety Rules and Regulations" for the construction industry, as prescribed by the Construction Safety Commission, Department of Labor and Economic Growth, Bureau of Safety and Regulations, Lansing, Michigan, and the Occupational Safety and Health Standards of the United States Department of Labor. This shall be made a condition of each subcontract entered into pursuant to the contract.

4. **Taxes:** The contractor shall include and be deemed to have included in the bid and contract price all Michigan sales and use taxes currently imposed by legislative enactment and as administered by the Michigan Department of Treasury's Revenue Division on the bid date.

5. **Nondiscrimination:** For all state contracts for goods or services in amount of *$5,000 or* more, or for contracts entered into with parties employing three or more employees; in connection with the performance of work under this contract, the contractor shall comply with all published rules, regulations, directives, and orders of the Michigan Civil Rights Commission relevant to Section 6, 1976 PA 453 as amended, which may be in effect at the time of bidding for any individual State project.

6. **Conflicts and Omissions:** The intent of the contract documents is to provide everything necessary for the proper execution of the work. In case of conflict, the work shall not proceed until a decision has been agreed upon by all parties concerned.

7. **Royalties, Patents, Notices, and Fees:** Contractor shall give all notices and pay all royalties, building permits, and fees. He/she shall defend all suits or claims for infringement of any patent rights and shall save the state harmless from loss on account thereof. He/she shall comply with all laws, ordinances, and codes applicable to any portion of the work.

8. **Examination of Premises:** Bidder shall familiarize himself/herself with local conditions affecting the job. He/she shall take his/her own measurements and be responsible for the correctness of same. Bidder shall be held to have made such examinations and no allowances will be made in his/her behalf by reason of error or omission on his/her part. If any part of the contractor's work depends for proper results upon existing work or the work of another contractor, the contractor shall notify the director before commencing work of any defects that will affect the results. Failure to so notify the director will constitute his/her acceptance of the conditions.

9. **Working Conditions:** All work shall be done in accordance with all regulations governing the state unit wherein the work is to be performed and with minimum possible interference with the proper functioning of the activities of that state unit. Materials, tools, equipment, etc., shall be confined so as not to unduly encumber the premises. Each bidder shall be held to have visited the site and checked with the authorities the working conditions and the methods of carrying out the work and to have included in his/her proposal all costs for meeting such working conditions.

10. **Materials:** Unless otherwise specified, all materials shall be new and of the best grade of the representative kinds for the purpose.

    a. Whenever material, an item of equipment, or a system is described by a performance specification, written as a proprietary product, or uses the name of a manufacturer or vendor, the term "or equal' if not inserted, shall be implied.

11. **Permits:** The contractor shall secure from the appropriate agencies ALL REQUIRED PERMITS necessary for proper execution of the work prior to starting work on the project site. All fees for securing the permits shall be paid by the contractor, including all inspection costs which may be legally assessed by the Bureau of Construction Codes in accordance with authority granted under 1980 PA 371.

    All work shall be executed in accordance with the State of Michigan's Construction Codes, except where work is specified or shown to be above such standard. The work shall be executed in conformity with the drawings and these specifications.

    If the contractor performs any work knowing it to be contrary to the State of Michigan's Construction Codes, the contractor shall assume full responsibility and shall bear all attributable costs.

12. **Employees and Superintendence:** Contractor shall enforce good order among his/her employees and shall not employ on the work any disorderly, intemperate, or unfit person or anyone not skilled in the work assigned to him/her. Contractor or a competent person having authority to act for him/her shall be at the work at all times. He/She shall have the plans and specifications available on the site at all times.

    a. Michigan Residency: Pursuant to 1988 PA 504, *50* percent of the persons working on this project and employed by the prime contractor or subcontractors shall have been residents of the State of Michigan for not less than one year before beginning work.

13. **Other Contracts:** The state may let other contracts in connection with the work and the contractor shall properly connect and coordinate his/her work with the work of such other contractors. The state shall not be liable for any damages or increased costs occasioned by the failure of other contractors to execute their work as may be anticipated by these documents.

14. **Protection:** The contractor shall be responsible for the protection of state property during the period of construction and shall exercise care to prevent damage to structures, utility services, storm and sanitary drainage systems, lawns, trees, plant material, fences, walks, drives, roadways, and other improvements in and adjacent to the area of work under the contract.

15. **Insurance:** No work connected with this contract shall be started until the contractor has submitted original signed certificates of insurance covering general liability

and workers' compensation indicating (a) all workers are insured to protect him/her from claims for damages for personal injury or death which may arise from operations under this contract as required by Michigan statute and that (b) he/she has the following liability insurance coverage: Commercial General Liability limits shall be $2,000,000.00 each occurrence, $2,000,000.00 general aggregate, $2,000,000.00 products and completed operations aggregate, $1,000,000.00 personal and advertising injury. Commercial Automobile Liability limits shall be $2,000,000.00 combined single limit, $1,000,000 Each Occurrence Limit, $500,000 Fire Damage Limit (any one fire). All of the above insurance shall be maintained during the life of this contract. Partial payments shall not relieve the contractor from full responsibility for any damage which may result from any cause including fire or other casualty until completion of the contract and final payment. Any casualties shall not relieve the contractor from performing the contract.

Insurance Companies must have a rating of "A—" or better as listed by A.M. Best Company. The State of Michigan must be named as an additional insured.

16. **Michigan Right-to-Know Law:** All contractors must conform to the provisions of the Michigan Right-to-Know Law, 1986 PA 80 which requires employers to:

    a. develop a communication program designed to safeguard the handling of hazardous chemicals through labeling of chemical containers and development and availability of Material Safety Data Sheets;

    b. provide training for employees who work with these chemicals.

    c. develop a written hazard communications program.

17. **Changes:** Contractor shall make changes in the contracted work only as ordered in writing by the director.

18. **Inspection:** Contractor shall at all times permit and facilitate inspection of the work by the director. The state unit will designate an inspector for this contract. It will be the responsibility of this contractor to notify the inspector of the date operations are to start and to contact the inspector periodically during the course of the work to insure that work is being performed in accordance with the conditions of this contract.

19. **Termination for Breach:** The state may terminate this contract when violations are not stopped immediately and corrected within a reasonable length of time after notification by the director or when the approved progress schedule is not met because of failure of the contractor to prosecute the work. In the event of such termination, the state may complete the contracted work and the contractor will be liable for any excess cost occasioned the state thereby and in such case the state may take possession of and utilize in completing the work such materials and equipment as may be on the site and necessary.

20. **Clean Up:** Contractor shall at all times keep the premises free from accumulations of waste material or rubbish caused by his/her employees or work and at the completion of the work. he/she shall remove all his/her waste, tools, equipment, staging and surplus materials from the structure and grounds and leave his/her work clean and ready for use.

21. **Guarantee:** Contractor shall furnish the state with a written guarantee to remedy any defects due to faulty materials or labor which appear in the work within one year from the date of final acceptance by the state.

22. **Payment:** Payment for the work will be made in one sum at the completion of the contract except that a single progress payment may be made at any time during the construction period for the value of the work completed, except in no case shall the amount of the payment exceed 50 percent of the value of the contract. If contractor expects to request partial payment, he/she shall submit a schedule of costs and quantities of the various parts of the work aggregating the total contract sum, such as the director may request. When requested, the contractor shall submit a statement based upon this schedule, itemized and supported as the director may require. Contract will not be considered complete until the work has been accepted as final by the state unit and the director and the attached "Guarantee and Statement" (DMB-437) has been completed and signed by the contractor. Payments will be made within 30 days after the Director has certified to the Owner that work is in place in the portion of the facility covered by the applicable request for payment in accordance with the Contract documents. Process of progress payments by the Owner may be deferred by the Owner until Work having a prior sequence, as provided in the Contract documents, is in place and is approved. Each Application of Payment shall certify that all monies owed by the Contractor to Subcontractors and Suppliers for which payment previously has been sought have been paid from the payments received.

23. **Prevailing Wage Rates:** The Prevailing Wage Law, Act 166 of the Public Acts of 1965 is applicable to this Contract. By law, prevailing wage rates are the rates contained in collectively bargained agreements covering the location of the state project. The purpose of establishing prevailing wage rates is to provide rates of pay for workers on construction projects for which the state or a school district is the contracting agent and which is financed or supported by the state. The Prevailing Wage Law requires that every contractor and subcontractor shall post a copy of all prevailing wage and fringe benefit rates prescribed in the contract at the construction site. An accurate record showing the name and occupation of and the wages and benefits paid to each construction mechanic must be kept by the employer and available for inspection by the department. Please pay special attention to the overtime requirements. A worker who believes he or she has not been paid the prevailing wage rate on a state project may file a complaint with the Wage Hour Administration, Bureau of Safety and Regulation, Department of Labor and Economic Development, 7150 Harris Drive, P.O.

Box 30476, Lansing, Michigan 48909-7976, Phone: (517) 322-1825.

24. **Protection of Utility Services:** It is a requirement of this Contract, in accordance with Public Act 53 of 1974, as amended, that the Contractor give notice of construction intent to public utilities. "Miss Dig" (telephone number 1-800-482-7171, toll free) shall be notified a minimum of 72 hours (three working days) prior to construction activities. The Contractor shall provide for the protection of all public utility underground and above ground facilities that are to remain. Damage to any such utility services resulting from the Contractor's operations shall be repaired or replaced by the Contractor without additional cost to the State.

GENERAL REQUIREMENTS

1. The state unit will provide the following work:

   a. **State Salvage:** The state reserves the right to salvage certain items and equipment. Such items will be identified to the bidder at the time of his/her inspection of the proposed work. Salvaged items will be removed by state prior to commencement of work under the contract.

   b. **Moving Furnishings and Equipment:** The contractor shall give timely notice to state unit of all furnishings, window covering and movable equipment that will interfere with his/her work or which the contractor cannot protect with coverings of paper, plastic, drop cloths or clean tarpaulin. The contractor shall furnish, install. maintain and remove all coverings used to protect furnishings. window coverings and movable equipment.

2. **Project Coordination:**

   a. Prior to beginning work the contractor shall **meet** with the state unit and arrange the schedule for the project. Once the project is started, it shall be carried to completion without delay.

   b. Any building utility service interruptions or outages required by the contractor in performing the work shall be prearranged with the staff of the state unit and shall occur only during those scheduled times.

3. **Cutting and Patching:**

   a. The contractor shall do all cutting, fitting or patching of the work that may be required to make its several parts fit together properly or make new work join with the existing structure. The contractor shall take proper precautions so as not to endanger any existing work. The contractor shall not cut or alter existing structural members or foundations.

   b. Holes or openings cut in exterior walls and roofs for installation of materials or equipment shall be waterproofed by appropriate, approved materials and methods.

   c. All adjacent finished surfaces that are damaged by the new work shall be patched with materials matching existing surfaces. Joints between patched and existing material shall be straight smooth and flush. All patching material shall be applied by workers skilled in its installation.

4. **Mechanical Alteration Procedures:**

   a. All work which will necessitate shutting down of existing mechanical equipment or systems shall be made at such time as will not interfere with the normal use of the existing building.

   b. Any cutting of floors, walls, roofs or ceilings required to run new work or remove old shall be performed by the contractor requiring same and all patching on his/her work shall be done by the contractor to full satisfaction of the state unit.

   c. All piping in existing building shall be run concealed as far as practical in pipe spaces, ceiling spaces, tunnels, crawl spaces or similar areas, except as approved or directed by the state unit.

5. **Project Meetings:**

   a. **Preconstruction Conferences:** The state unit may schedule a preconstruction conference to be attended by the, state unit staff, and the contractors. Once the project has been started, the contractor shall carry it to completion without delay.

   b. **Meetings:** The state unit may schedule meetings to be held on the job site whenever needed to supply information necessary to prevent job interruptions, to observe the work or to inspect completed work. The contractor shall be represented at each meeting by persons with full authority to act for the contractor in regard to all portions of the work.

6. **Shop Drawings and Project Data:**

   a. Before the delivery of any material or equipment to the job site, the contractor shall submit to the state unit a complete list of material suppliers, subcontractors, and brand names of all materials proposed to be used in the project.

   b. The contractor shall check and verify all field measurements and shall submit to the state unit a minimum of five copies of shop drawings, product data catalogs, material schedules, safety data sheets, etc. Following examination by the state unit, three copies will be retained for the state's use and the remaining copies will be returned to the contractor with indication of approval or with notations for correction.

7. **Temporary Utilities:**

   a. The contractor shall furnish and install all temporary facilities and controls required by the work, shall remove them from state property upon completion of the work, and the grounds and existing facilities shall be restored to their original condition.

   b. Water and electricity will be available in the area where work will be performed. The contractor will not be charged for reasonable use of these services for

construction operation. The contractor shall pay costs for installation and removal of any temporary connections including necessary safety devices and controls. Use of services shall not disrupt or interfere with operations of the state unit.

c. Temporary Sanitary Facilities: The state unit will designate a permanent toilet facility on the premises for use by a personnel employed in the work. The contractor shall repair any damage to the toilet facility caused by his/her employees.

d. Heating units if required shall be of type approved by the state unit. Equipment and surroundings shall be kept clean and in safe condition All direct fired space heaters, if used, shall be vented directly to the outside. The contractor shall pay for all fuel and/or electricity used for temporary heat.

8. **Construction Aids:**

a. The contractor shall furnish, install, and maintain as long as necessary and remove when no longer required, safe and adequate scaffolding, ladders, staging, platforms, chutes, railings, hoisting equipment, etc., as required for proper execution of the work. All construction aids shall conform to federal, state, and local codes or laws for protection of workers and the public.

b. **Debris Chute:** The contractor shall use a chute to lower debris resulting from his/her work. The chute shall be the enclosed type with its discharge directly into the truck.

9. **Barriers and Enclosures:** The contractor shall furnish, install and maintain as long as necessary and remove when no longer required adequate barriers, warning signs or lights at all dangerous points throughout the work for protection of property, workers and the public. The contractor shall hold the State of Michigan harmless from damage or claims arising out of any injury or damage that may be sustained by any person or persons as a result of the work under the contract.

10. **Contract Close Out:**

a. **Substantial Completion:** The contractor shall notify the state unit when the work will be substantially complete and ready for inspection and preparation of a list of minor replacement, correction and adjustment items. The contractor shall be represented on the job site at the time this inspection is made and thereafter shall complete all work by the date set for final acceptance by the owner.

b. **Cleaning:**

(1) **Regular Cleaning:** All scrap or removed material, debris or rubbish shall be regularly removed from the project at the end of each working day. No discarded material shall be deposited on the grounds of the state unit without the express permission of the physical plant engineer or administrative officer. No salvage or surplus material may be sold on the premises of the state unit.

(2) **Final Cleaning:** Just prior to final acceptance by the state unit, the contractor shall clean all of the work and existing surfaces, building elements and contents that were soiled by his/her operations and make repairs for any damage or blemish that was caused by the work.

11. **Project Record Documents:** The contractor shall furnish to state unit with the request for final payment reproducible drawings or plans, and any sections or details necessary, clearly showing the actual path and location of material and equipment installed in this project.

12. **Warranties:** The contractor shall forward to the state unit Form PR-1628E covering statements concerning guarantee and indebtedness, and any other special warranties or requirements of the contract documents.

Department of Management and Budget
Office of Facilities

PROFESSIONAL/CONTRACTOR DEMOGRAPHICS, STATISTICS AND CERTIFICATION

1. Company Name: _____

2. Company Address: _____

_____

3 Principle Place of Business (zip code): _____

4. Organization Type

( ) Limited Liability Company
( ) Limited Liability partnership
( ) Corporation
( ) Partnership
( ) Sole Proprietorship
( ) Other: _____

5. Year of Establishment _____

Woman, Minority, or Veteran Owned Small

Business Representation
(For Statistical Use Only)

DEFINITIONS:

'Woman-owned business', means a small business that is at least 51% owned by a woman or women who are US citizens and who control and operate the business

The vendor represents that it IS _____, IS NOT _____ a women-owned small business.

'Minority-owned business', means a small business that is at least 51% owned by a minority or minorities who are US citizens and who control and operate the business

The vendor represents that it IS _____, IS NOT _____ a minority owned small business

'Veteran-owned business', means a small business that is at least 51% owned by a veteran or veterans who are U.S. citizens and who control and operate the business

The vendor represents that it IS _____, IS NOT _____ a veteran owned small business

The contractor represents and warrants that the company meets the above (when checked) and can provide supportive documentation upon request

Certification of a Michigan Based Business

(Information Required Prior to Contract Award for Application
of State Preference/Reciprocity Provisions)

DEFINITION: To qualify as a Michigan business, vendor must have during the 12 months immediately preceding this bid deadline, or if the business is newly established, for the period the business has been in existence, it has (check all that apply):

Bidder shall also indicate one of the following:

☐ Bidder qualifies as a Michigan business (provide zip code: _____)

( ) Filed a Michigan single business tax return showing a portion or all of the income tax base allocated or apportioned to the State of Michigan pursuant to the Michigan Single Business Tax Act, 1975 PA 228, MCL ˜208.1 – 208.145; or

( ) Filed a Michigan income tax return showing income generated in or attributed to the State of Michigan; or

( ) Withheld Michigan income tax from compensation paid to the bidder's owners and remitted the tax to the Department of Treasury; or

I certify that **I have personal knowledge** of such filing or withholding, that it was more than a nominal filing for the purpose of gaining the status of a Michigan business, and that it indicates a significant business presence in the state, considering the size of the business and the nature of its activities.

I authorize the Michigan Department of Treasury to verify that the business has or has not met the criteria for a Michigan business indicated above and to disclose the verifying information to the procuring agency.

☐ Bidder does not qualify as a Michigan business (provide name of State: _____)

☐ Principle place of business is outside the State of Michigan, however service/commodity provided by a

location within the State of Michigan (provide zip code: (_____)

_____
Authorized Agent Name (print or type)

_____
Authorized Agent Signature

Fraudulent Certification as a Michigan business is prohibited by MCL 18.1268 § 268. A BUSINESS THAT PURPOSELY OR WILLFULLY SUBMITS A FALSE CERTIFICATION THAT IT IS A MICHIGAN BUSINESS OR FALSELY INDICATES THE STATE IN WHICH IT HAS ITS PRINCIPLE PLACE OF BUSINESS IS GUILTY OF A FELONY, PUNISHABLE BY A FINE OF NOT LESS THAN $25,000.

Department of Management and Budget
Office of Facilities

Certification Regarding
Debarment, Suspension, and Other Responsibility Matters

The prospective participant certifies to the best of its knowledge and belief that, within the past three (3) years, the vendor, an officer of the vendor, or an owner of a 25% or greater interest in the vendor:

(a) Has not been convicted of a criminal offense incident to the application for or performance of a contract or subcontract with the State of Michigan or any of its agencies, authorities, boards, commissions, or departments.

(b) Has not been convicted of a criminal offense which negatively reflects on the vendor's business integrity, including but not limited to, embezzlement, theft, forgery, bribery, falsification or destruction of records, receiving stolen property, negligent misrepresentation, price-fixing, bid-rigging, or a violation of state or federal anti-trust statutes.

(c) Has not had a loss or suspension of a license or the right to do business or practice a profession, the loss or suspension of which indicates dishonesty, a lack of integrity, or a failure or refusal to perform in accordance with the ethical standards of the business or profession in question.

(d) Has not been convicted of a criminal offense or other violation of other state or federal law, as determined by a court of competent jurisdiction or an administrative proceeding, which in the opinion of DMB indicates that the vendor is unable to perform responsibly or which reflects a lack of integrity that could negatively impact or reflect upon the State of Michigan, including but not limited to, any of the following offenses under or violations of:

i. The Natural Resources and Environmental Protection Act, 1994 PA 451, MCL 324.101 to 324.90106.
ii. A persistent and knowing violation of the Michigan Consumer Protection Act, 1976 PA 331, MCL 445.901 to 445.922.
iii. 1965 PA 166, MCL 408.551 to 408.558 (law relating to prevailing wages on state projects) and a finding that the vendor failed to pay the wages and/or fringe benefits due within the time period required.
iv. Repeated or flagrant violations of 1978 PA 390 MCL 408.471 to 408.490 (law relating to payment of wages and fringe benefits).
v. A willful or persistent violation of the Michigan Occupational Health and Safety Act, 1974, PA 154, MCL 408.10001 to 408.1094, including: a criminal conviction, repeated willful violations that are final orders, repeated violations that are final orders, and failure to abate notices that are final orders.
vi. A violation of federal or state civil rights, equal rights, or non-discrimination laws, rules, or regulations.

I understand that a false statement on this certification may be grounds for rejection of this proposal or termination of the award and may be grounds for debarment.

_____

Typed Name & Title of Authorized Representative

_____

Signature of Authorized Representative Date

☐ I am unable to certify to the above statements. My explanation is attached.

STATE OF MICHIGAN

JENNIFER M. GRANHOLM
GOVERNOR

DEPARTMENT OF ENERGY, LABOR & ECONOMIC GROWTH
LANSING

STANLEY "SKIP" PRUSS
DIRECTOR

REQUIREMENTS OF THE PREVAILING WAGES ON STATE PROJECTS ACT, PUBLIC ACT 166 OF 1965

The Michigan Department of Labor & Economic Growth determines prevailing rates pursuant to the Prevailing Wages on State Projects Act, Public Act 166 of 1965, as amended. The purpose of establishing prevailing rates is to provide minimum rates of pay that must be paid to workers on construction projects for which the state or a school district is the contracting agent and which is financed or financially supported by the state. By law, prevailing rates are compiled from the rates contained in collectively bargained agreements which cover the locations of the state projects. The official prevailing rates provide an hourly rate which includes wage and fringe benefit totals for designated construction mechanic classifications. The overtime rates also include wage and fringe benefit totals. Please pay special attention to the overtime and premium pay requirements. Prevailing wage is satisfied when wages plus fringe benefits paid to a worker are equal to or greater than the required rate.

State of Michigan responsibilities under the law:

- The department establishes the prevailing rate for each classification of construction mechanic ***requested by a_contracting agent*** prior to contracts being let out for bid on a state project.

Contracting agent responsibilities under the law:

- If a contract is not awarded or construction does not start within 90 days of the date of the issuance of rates, a re-determination of rates must be requested by the contracting agent.
- Rates for classifications needed but not provided on the Prevailing Rate Schedule, ***must*** be obtained ***prior*** to contracts being let out for bid on a state project.
- The contracting agent, by written notice to the contractor and the sureties of the contractor known to the contracting agent, may terminate the contractor's right to proceed with that part of the contract, for which less than the prevailing rates have been or will be paid, and may proceed to complete the contract by separate agreement with another contractor or otherwise, and the original contractor and his sureties shall be liable to the contracting agent for any excess costs occasioned thereby.

Contractor responsibilities under the law:

- Every contractor and subcontractor shall keep posted on the construction site, in a conspicuous place, a copy of all prevailing rates prescribed in a contract.
- Every contractor and subcontractor shall keep certified payrolls, as used in the industry, of each and every construction mechanic, and verification of such certified payroll in writing by either a representative or auditor/certified accountant at the end of such a certified payroll. These records should include the occupation and indicate the hours worked on each project for each classification and the actual wages and benefits paid. This record shall be available for reasonable inspection by the contracting agent or the department.
- Each contractor or subcontractor is separately liable for the payment of the prevailing rate to its employees.
- The prime contractor is responsible for advising all subcontractors of the requirement to pay the prevailing rate prior to commencement of work.
- The prime contractor is secondarily liable for payment of prevailing rates that are not paid by a subcontractor.
- A construction mechanic shall only be paid the apprentice rate if registered with the United States Department of Labor, Bureau of Apprenticeship and Training and the rate is included in the contract.

Enforcement:

A person who has information of an alleged prevailing wage violation on a state project may file a complaint with the Wage & Hour Division. The department will investigate and attempt to resolve the complaint informally. During the course of an investigation, if the requested records and posting certification are not made available in compliance with Section 5 of Act 166, the investigation will be concluded and a referral to the Office of Attorney General for civil action will be made. The Office of Attorney General will pursue costs and fees associated with a lawsuit if filing is necessary to obtain records.

A violation of Act 166 may result in the contractor's name being added to the Prevailing Wage Act Violators List published on the division's website, updated monthly. This list includes the names and addresses of contractors and subcontractors the division has found in violation of Act 166 based on complaints from individuals and third parties. The Prevailing Wage Act Violators List is intended to inform contracting agents of contractors that have violated Act 166 for use in determining who should receive state-funded projects.

DELEG is an equal opportunity employer/program.
Auxiliary aids, services and other reasonable accommodations are available upon request to individuals with disabilities.

WAGE & HOUR DIVISION
P.O. BOX 30476 • LANSING, MICHIGAN 48909-7976
www.michigan.gov/wagehour • (517) 335-0400 • FAX (517) 335-0077

STATE OF MICHIGAN

JENNIFER M. GRANHOLM
GOVERNOR

DEPARTMENT OF LABOR & ECONOMIC GROWTH
LANSING

KEITH W. COOLEY
DIRECTOR

Michigan Department of Energy, Labor & Economic Growth *Wage & Hour Division*

OVERTIME PROVISIONS for MICHIGAN PREVAILING WAGE RATE SCHEDULE

1. Overtime is represented as a nine character code. Each character represents a certain period of time after the first 8 hours Monday thru Friday.

	Monday thru Friday	Saturday	Sunday & Holidays
First 8 Hours		4	8
9th Hour	1	5	
10th Hour	2	6	
Over 10 hours	3	7	

Overtime for Monday thru Friday after 8 hours:
the 1st character is for time worked in the 9th hour *(8.1 - 9 hours)*
the 2nd character is for time worked in the 10th hour *(9.1 - 10 hours)*
the 3rd character is for time worked beyond the 10th hour *(10.1 and beyond)*

Overtime on Saturday:
the 4th character is for time worked in the first 8 hours on Saturday *(0 - 8 hours)*
the 5th character is for time worked in the 9th hour on Saturday *(8.1 - 9 hours)*
the 6th character is for time worked in the 10th hour *(9.1 - 10 hours)*
the 7th character is for time worked beyond the 10th hour *(10.01 and beyond)*

Overtime on Sundays & Holidays
The 8th character is for time worked on Sunday or on a holiday

Four Ten Hour Days
The last character indicates if an optional 4-day 10-hour per day workweek can be worked without paying overtime after 8 hours worked.

2. Overtime Indicators Used in the Overtime Provision:
H - means TIME AND ONE-HALF due
X - means TIME AND ONE-HALF due after 40 HOURS worked
D - means DOUBLE PAY due
Y - means YES an optional 4-day 10-hour per day workweek can be worked without paying overtime after 8 hours worked
N - means NO an optional 4-day 10-hour per day workweek *can not* be worked without paying overtime after 8 hours worked

3. EXAMPLES:
HHHHHHHDN - This example shows that the 1½ rate must be used for time worked after 8 hours Monday thru Friday *(characters 1 - 3);* for all hours worked on Saturday, 1½ rate is due *(characters 4 - 7).* Work done on Sundays or holidays must be paid double time *(character 8).* The N *(character 9)* indicates that 4 ten-hour days is not an acceptable workweek at regular pay.

XXXHHHHDY - This example shows that the 1½ rate must be used for time worked after 40 hours are worked Monday thru Friday *(characters 1-3);* for hours worked on Saturday, 1½ rate is due *(characters 4 – 7).* Work done on Sundays or holidays must be paid double time *(character 8).* The Y *(character 9)* indicates that 4 ten-hour days is an acceptable alternative workweek.

(REV 01/14/09)

WAGE & HOUR DIVISION
P.O. BOX 30476 • LANSING, MICHIGAN 48909-7976
www.michigan.gov/wagehour • (517) 335-0400 • FAX (517) 335-0077

ENGINEERS - CLASSES OF EQUIPMENT LIST

UNDERGROUND ENGINEERS

CLASS I

Backfiller Tamper, Backhoe, Batch Plant Operator, Clam-Shell, Concrete Paver (2 drums or larger), Conveyor Loader (Euclid type), Crane (crawler, truck type or pile driving), Dozer, Dragline, Elevating Grader, End Loader, Gradall (and similar type machine), Grader, Power Shovel, Roller (asphalt), Scraper (self propelled or tractor drawn), Side Broom Tractor (type D-4 or larger), Slope Paver, Trencher (over 8' digging capacity), Well Drilling Rig, Mechanic, Slip Form Paver, Hydro Excavator.

CLASS II

Boom Truck (power swing type boom), Crusher, Hoist, Pump (1 or more 6" discharge or larger gas or diesel powered by generator of 300 amps or more, inclusive of generator), Side Boom Tractor (smaller than type D-4 or equivalent), Tractor (pneu-tired, other than backhoe or front end loader), Trencher (8' digging capacity and smaller), Vac Truck.

CLASS III

Air Compressors (600 cfm or larger), Air Compressors (2 or more less than 600 cfm), Boom Truck (non-swinging, non-powered type boom), Concrete Breaker (self-propelled or truck mounted, includes compressor), Concrete Paver (1 drum, ½ yard or larger), Elevator (other than passenger), Maintenance Man, Mechanic Helper, Pump (2 or more 4" up to 6" discharge, gas or diesel powered, excluding submersible pump), Pumpcrete Machine (and similar equipment), Wagon Drill Machine, Welding Machine or Generator (2 or more 300 amp or larger, gas or diesel powered).

CLASS IV

Boiler, Concrete Saw (40HP or over), Curing Machine (self-propelled), Farm Tractor (w/attachment), Finishing Machine (concrete), Firemen, Hydraulic Pipe Pushing Machine, Mulching Equipment, Oiler (2 or more up to 4", exclude submersible), Pumps (2 or more up to 4" discharge if used 3 hrs or more a day-gas or diesel powered, excluding submersible pumps), Roller (other than asphalt), Stump Remover, Vibrating Compaction Equipment (6' wide or over), Trencher (service) Sweeper (Wayne type and similar equipment), Water Wagon, Extend-a-Boom Forklift.

HAZARDOUS WASTE ABATEMENT ENGINEERS

CLASS I

Backhoe, Batch Plant Operator, Clamshell, Concrete Breaker when attached to hoe, Concrete Cleaning Decontamination Machine Operator, Concrete Pump, Concrete Paver, Crusher, Dozer, Elevating Grader, Endloader, Farm Tractor (90 h.p. and higher), Gradall, Grader, Heavy Equipment Robotics Operator, Hydro Excavator, Loader, Pug Mill, Pumpcrete Machines, Pump Trucks, Roller, Scraper (self-propelled or tractor drawn), Side Boom Tractor, Slip Form Paver, Slope Paver, Trencher, Ultra High Pressure Waterjet Cutting Tool System Operator, Vactors, Vacuum Blasting Machine Operator, Vertical Lifting Hoist, Vibrating Compaction Equipment (self-propelled), and Well Drilling Rig.

CLASS II

Air Compressor, Concrete Breaker when not attached to hoe, Elevator, End Dumps, Equipment Decontamination Operator, Farm Tractor (less than 90 h.p.), Forklift, Generator, Heater, Mulcher, Pigs (Portable Reagent Storage Tanks), Power Screens, Pumps (water), Stationary Compressed Air Plant, Sweeper, Water Wagon and Welding Machine.

Revised: 05/23/08

JENNIFER M. GRANHOLM
GOVERNOR

Michigan Department of Energy, Labor & Economic Growth
Wage & Hour Division
PO Box 30476
Lansing , MI 48909-7976
517.335.0400
www.michigan.gov/wagehour

STANLEY "SKIP" PRUSS
DIRECTOR

Informational Sheet: Prevailing Wages on State Projects
General Information Regarding Fringe Benefits

Certain fringe benefits **may** be credited toward the payment of the Prevailing Wage Rate:

- If a fringe benefit is paid directly to a construction mechanic
- If a fringe benefit contribution or payment is made on behalf of a construction mechanic
- If a fringe benefit, which may be provided to a construction mechanic**,** is pursuant to a written contract or policy
- If a fringe benefit is paid into a fund, for a construction mechanic

When a fringe benefit is not paid by an hourly rate, the hourly credit will be calculated based on the annual value of the fringe benefit divided by 2080 hours per year (52 weeks @ 40 hours per week).

The following is an example of the types of fringe benefits allowed and how an hourly credit is calculated:

Vacation	40 hours X $14.00 per hour = $560/2080 =	$.27
Dental insurance	$31.07 monthly premium X 12 mos. = $372.84 /2080 =	$.18
Vision insurance	$5.38 monthly premium X 12 mos. = $64.56/2080 =	$.03
Health insurance	$230.00 monthly premium X 12 mos. = $2,760.00/2080 =	$1.33
Life insurance	$27.04 monthly premium X 12 mos. = $324.48/2080 =	$.16
Tuition	$500.00 annual cost/2080 =	$.24
Bonus	4 quarterly bonus/year x $250 = $1000.00/2080 =	$.48
401k Employer Contribution	$2000.00 total annual contribution/2080 =	$.96
Total Hourly Credit		$3.65

Other examples of the types of fringe benefits allowed:

- Sick pay
- Holiday pay
- Accidental Death & Dismemberment insurance premiums

The following are examples of items that **will not** be credited toward the payment of the Prevailing Wage Rate

- Legally required payments, such as:
  - Unemployment Insurance payments
  - Workers' Compensation Insurance payments
  - FICA (Social Security contributions, Medicare contributions)
- Reimbursable expenses, such as:
  - Clothing allowance or reimbursement
  - Uniform allowance or reimbursement
  - Gas allowance or reimbursement
  - Travel time or payment
  - Meals or lodging allowance or reimbursement
  - Per diem allowance or payment
- Other payments to or on behalf of a construction mechanic that are not wages or fringe benefits, such as:
  - Industry advancement funds
  - Financial or material loans

State of Michigan
Department of Energy, Labor and Economic Growth

Wage and Hour Division
6546 Mercantile Way, Suite 5
PO Box 30476
Lansing, MI 48909-7976
Telephone: 517-335-0400
Fax: 517-335-0077
www.michigan.gov/wagehour

Official Request #: 429
Requestor: DEPT. OF NATURAL RESOURCES
Project Description: NEW WATER WELL & HAND PUMP
Project Number: FISHERMAN'S ISLAND STATE PARK

Charlevoix County
Official 2009 Prevailing Wage Rates for State Funded Projects

Issue Date: 3/24/2009
Contract must be awarded by: 6/22/2009

Classification Name	Description	Last Updated	Straight Hourly	Time and a Half	Double Time	Overtime Provision
Bricklayer						
Bricklayer	BR9-40	3/6/2009	$37.43	$49.89	$62.35	H H H X X X X D Y
	Apprentice Rates:					
	0-749 hours		$27.46	$34.93	$42.41	
	750-1499 hours		$28.71	$36.81	$44.91	
	1500-2249 hours		$29.95	$38.67	$47.39	
	2250-2,999 hours		$31.20	$40.55	$49.89	
	3000-3749 hours		$32.45	$42.42	$52.39	
	3750-4499 hours		$33.69	$44.28	$54.87	
	4500-5249 hours		$34.94	$46.15	$57.37	
	5250-6000 hours		$36.18	$48.01	$59.85	
Caulker, Pointer, Cleaner, Plasterer, Tile Setter	BR9-40-BL	9/17/2008	$37.43	$49.89	$62.35	H H H X X X X D Y
	Apprentice Rates:					
	0-749 hours		$28.71	$36.81	$44.91	
	750-1499 hours		$29.95	$38.67	$47.39	
	1500-2249 hours		$31.20	$40.55	$49.89	
	2250-2999 hours		$32.45	$42.42	$52.39	
	3000-3749 hours		$33.69	$44.28	$54.87	
	3750-4499 hours		$34.94	$46.15	$57.37	
Carpenter						
Carpenter and Floor Layer	CA202	1/28/2009	$32.17	$42.86	$53.54	H H H H H H H D Y
	Apprentice Rates:					
	1st year		$21.42	$26.76	$32.10	
	2nd year		$23.56	$29.97	$36.38	
	3rd year		$26.77	$34.78	$42.80	
	4th year		$28.90	$37.98	$47.06	
Piledriver	CA202PD	1/28/2009	$32.82	$43.82	$54.82	H H H H H H H D Y
	Apprentice Rates:					
	1st Year		$21.76	$27.26	$32.76	
	2nd Year		$23.96	$30.56	$37.16	
	3rd Year		$27.26	$35.51	$43.76	
	4th Year		$29.46	$38.81	$48.16	
Cement Finisher						
Cement Finisher	BR9-40-CF	9/17/2008	$33.69	$44.52	$55.34	H H D X X X D D Y
	Apprentice Rates:					
	0-749 hours		$26.11	$33.14	$40.18	
	750-1499 hours		$27.19	$34.76	$42.34	
	1500-2249 hours		$28.28	$36.40	$44.52	
	2250-2999 hours		$29.36	$38.02	$46.68	

Official Rate Schedule

Every contractor and subcontractor shall keep posted on the construction site, in a conspicuous place, a copy of all prevailing wage and fringe benefit rates prescribed in a contract.

	3000-3749 hours			$30.44	$39.64	$48.84								
	3750-4499 hours			$31.52	$41.26	$51.00								
Cement Mason														
Cement Mason		PL16-13	5/30/2008	$33.42	$45.18	$56.94	H	H	H	H	H	H	D	Y
	Apprentice Rates:													
	1st year			$25.19	$32.84	$40.48								
	2nd year			$27.54	$36.36	$45.18								
	3rd year			$29.89	$39.88	$49.88								
Electrician														
Inside Wireman Double time pay required after 12 hours worked Monday - Friday		EC-498-IW	3/28/2008	$38.74	$55.07	$71.40	H	H	H	H	H	H	D	Y
	Apprentice Rates:													
	Period 1			$16.41	$22.02	$27.63								
	Period 2			$17.79	$24.10	$30.39								
	Period 3			$20.71	$28.48	$36.23								
	Period 4			$22.13	$30.60	$39.07								
	Period 5			$25.31	$35.37	$45.43								
	Period 6			$28.20	$39.71	$51.21								
Heat and Frost Insulator														
Spray Insulation		AS25S	3/5/2007	$20.14	$29.14		H	H	H	H	H	H	H	N
Heat and Frost Insulator and Asbestos Worker														
Heat and Frost Insulator and Asbestos Worker		AS47	7/2/2008	$42.75	$56.74	$70.72	H	H	H	H	H	H	D	Y
	Apprentice Rates:													
	1st year			$24.90	$31.89	$38.88								
	2nd year			$28.47	$36.86	$45.25								
	3rd year			$32.04	$41.83	$51.62								
	4th year			$35.61	$46.80	$57.99								
	5th year			$39.18	$51.77	$64.35								
Ironworker														
Pre-engineered Metal Work		IR-25-PE-Z3	5/8/2008	$39.47	$49.54	$59.60	X	X	H	X	X	X	D	Y
	Apprentice Rates:													
	1st Level			$23.47	$28.51	$33.55								
	2nd Level			$25.12	$30.85	$36.58								
	3rd Level			$26.78	$33.19	$39.61								
	4th Level			$28.44	$35.55	$42.66								
	5th Level			$30.10	$37.90	$45.70								
	6th Level			$31.36	$39.65	$47.93								
Rigger / Machinery mover		IR-340-RIG	9/29/2008	$34.33	$45.46	$56.58	X	X	X	X	X	X	D	Y
Structural, Reinforcing, and Finish work.		IR-340-STR	9/26/2008	$38.70	$50.70	$62.70	X	X	X	X	X	X	D	Y
	Apprentice Rates:													
	2nd Year			$23.25	$30.45	$37.65								
	3rd Year			$25.65	$34.05	$42.45								
	4th Year			$29.85	$39.45	$49.05								
	5th Year			$32.25	$43.05	$53.85								
	1st Year			$20.85	$26.85	$32.85								
Laborer														
Class A Laborer: building and heavy construction work, demolition, mortar mixers, mason tender, carpenter tender, fire watch, heater tender, all 3" pumps and below, furniture mover, material mixers, vibrator operators, operators of concrete mixers, chipping hammers, tamping machines, sand blasters, concrete breakers (90 lb hammer or less), cement gun nozzelman, operators of motor driven		L1098-N-A	8/15/2008	$25.99	$34.28	$42.56	H	H	H	H	H	H	D	Y

buggies, plaster mixers and plaster tenders, pipe or crock layers, caisson work in buildings only, except others falling within class B.

Apprentice Rates:													
0-1,000 work hours			$21.85	$28.06	$34.28								
1,001-2,000 work hours			$22.68	$29.31	$35.94								
2,001-3,000 work hours			$23.50	$30.54	$37.58								
3,001-4,000 work hours			$25.16	$33.03	$40.90								
Class B Refractory Work: inside or outside digester, tanks, lime kilns, chests, boilers, and boiler tubes, including the handling of acid, chlorine, chemicals, epoxies, liquids and cleaning of existing precipitators, hydro blasting, hydro washing, and sandblasting.	L1098-N-B	8/15/2008	$26.99	$35.78	$44.56	H	H	H	H	H	H	D	Y
Apprentice Rates:													
0-1,000 work hours			$22.60	$29.19	$35.78								
1,001-2,000 work hours			$23.48	$30.51	$37.54								
2,001-3,000 work hours			$24.35	$31.82	$39.28								
3,001-4,000 work hours			$26.11	$34.46	$42.80								
Laborer - Hazardous													
Class A Laborer performing work in conjunction with site preparation and other preliminary work prior to actual removal, handling, or containment of hazardous waste substances not requiring use of personal protective equipment required by state or federal regulations; or a laborer performing work in conjunction with the removal, handling, or containment of hazardous waste substances when use of personal protective equipment level "D" is required.	LHAZ-Z10-A	11/14/2008	$27.73	$39.14	$50.54	H	H	H	H	H	H	D	Y
Apprentice Rates:													
0-1,000 work hours			$23.63	$32.98	$42.34								
1,001-2,000 work hours			$24.45	$34.22	$43.98								
2,001-3,000 work hours			$25.27	$35.44	$45.62								
3,001-4,000 work hours			$26.91	$37.90	$48.90								
Class B Laborer - performing work in conjunction with the removal, handling, or containment of hazardous waste substances when the use of personal protective equipment levels "A", "B" or "C" is required.	LHAZ-Z10-B	11/14/2008	$28.73	$40.64	$52.54	H	H	H	H	H	H	D	Y
Apprentice Rates:													
0-1,000 work hours			$24.38	$34.11	$43.84								
1,001-2,000 work hours			$25.25	$35.42	$45.58								
2,001-3,000 work hours			$26.12	$36.72	$47.32								
3,001-4,000 work hours			$27.86	$39.33	$50.80								
Landscape Laborer													
Landscape Specialist includes air, gas, and diesel equipment operator, lawn sprinkler installer on landscaping work where seeding, sodding, planting, cutting, trimming, backfilling, rough grading or maintenance of landscape	LLAN-Z2-A	7/1/2008	$24.65	$33.97	$43.28	X	X	H	X	X	X	H	D	Y
Operating Engineer													
Class C- Regular equipment operator, crane, stiff leg derrick, scraper dozer, grader, front end loader, hoist, job mechanic, head grease man, concrete pump truck and hydro excavators.	EN-324-BH2C	5/20/2008	$43.85	$57.37	$70.89	H	H	H	H	H	H	D	Y
Apprentice Rates:													
1st 6 months			$35.39	$44.86	$54.32								
2nd 6 months			$36.74	$46.88	$57.02								

	3rd 6 months			$38.09	$48.90	$59.72								
	4th 6 months			$39.44	$50.93	$62.42								
	5th 6 months			$40.80	$52.97	$65.14								
	6th 6 months			$42.15	$55.00	$67.84								
Operating Engineer Underground														
Class I Equipment		EN-324A2-UC1	9/26/2008	$44.33	$58.07	$71.80	H	H	H	H	H	H	D	Y
	Apprentice Rates:													
	0-999 hours			$35.74	$45.36	$54.97								
	1,000-1,999 hours			$37.12	$47.43	$57.73								
	2,000-2,999 hours			$38.49	$49.48	$60.47								
	3,000-3,999 hours			$39.87	$51.55	$63.23								
	4,000-4,999 hours			$41.23	$53.59	$65.95								
	5,000-5,999 hours			$42.61	$55.66	$68.71								
Class II Equipment		EN-324A2-UC2	9/26/2008	$39.44	$50.73	$62.02	H	H	H	H	H	H	D	Y
Class III Equipment		EN-324A2-UC3	9/26/2008	$38.94	$49.98	$61.02	H	H	H	H	H	H	D	Y
Class IV Equipment		EN-324A2-UC4	9/26/2008	$38.66	$49.56	$60.46	H	H	H	H	H	H	D	Y
Painter														
Painter		PT-1803-P	7/5/2007	$31.88	$42.42	$52.96	H	H	H	H	H	H	D	Y
	Apprentice Rates:													
	1st year			$20.29	$25.04	$29.78								
	2nd year			$24.50	$31.35	$38.20								
	3rd year			$27.66	$36.09	$44.52								
Plumber, Pipefitter, Welder														
Plumber, Pipefitter, Welder		PL-85-Z2	8/9/2007	$44.44	$58.39	$72.33	H	H	H	H	H	H	D	Y
	Apprentice Rates:													
	1st 6 months			$26.42	$33.39	$40.36								
	2nd 6 months			$28.28	$35.95	$43.62								
	3rd 6 months			$30.14	$38.51	$46.87								
	4th 6 months			$32.01	$41.08	$50.14								
	5th 6 months			$33.87	$43.63	$53.39								
	6th 6 months			$35.74	$46.20	$56.66								
	7th 6 months			$37.60	$48.75	$59.91								
	8th 6 months			$39.47	$51.32	$63.18								
	9th & 10th 6 months			$41.33	$53.88	$66.43								
Sheet Metal Worker														
Sheet Metal Worker		SHM-7-3	11/26/2008	$42.63	$55.14	$67.65	H	H	D	H	H	H	D	D	Y
	Apprentice Rates:													
	1st 6 months			$14.34	$19.35	$24.35								
	2nd 6 months			$16.66	$22.29	$27.92								
	3rd 6 months			$18.37	$24.62	$30.88								
	4th 6 months			$20.68	$27.56	$34.44								
	5th 6 months			$22.39	$29.90	$37.40								
	6th 6 months			$24.71	$32.84	$40.97								
	7th 6 months			$26.41	$35.16	$43.92								
	8th 6 months			$28.73	$38.11	$47.49								
Truck Driver														
of all trucks of 8 cubic yd capacity or over		TM-RB2	9/17/2008	$35.84	$36.44		H	H	H	H	H	H	H	Y
of all trucks of 8 cubic yard capacity or less		TM-RB2A	9/17/2008	$35.74	$36.29		H	H	H	H	H	H	H	Y
on euclid type equipment		TM-RB2B	9/17/2008	$35.99	$36.66		H	H	H	H	H	H	H	Y
Underground Laborer Open Cut, Class I														

Construction Laborer	LAUC-Z4-1	9/18/2008	$29.19	$38.78	$48.36	H H H H H H H D Y
	Apprentice Rates:					
	0-1,000 work hours		$24.93	$32.39	$39.84	
	1,001-2,000 work hours		$25.79	$33.68	$41.56	
	2,001-3,000 work hours		$26.64	$34.95	$43.26	
	3,001-4,000 work hours		$28.34	$37.51	$46.66	
Underground Laborer Open Cut, Class II						
Mortar and material mixer, concrete form man, signal man, well point man, manhole, headwall and catch basin builder, guard rail builders, headwall, seawall, breakwall, dock builder and fence erector.	LAUC-Z4-2	9/18/2008	$29.32	$38.97	$48.62	H H H H H H H D Y
	Apprentice Rates:					
	0-1,000 work hours		$25.03	$32.54	$40.04	
	1,001-2,000 work hours		$25.89	$33.83	$41.76	
	2,001-3,000 work hours		$26.75	$35.12	$43.48	
	3,001-4,000 work hours		$28.46	$37.69	$46.90	

Standard Water Well Abandonment Specification
New Water Well and Hand Pump Installation
Fisherman's Island State Park

WATER WELL ABANDONMENT SECTION 02685

PART 1 - GENERAL

1.01 SCOPE OF WORK:

A. General: Provide all labor, materials and equipment for the complete and satisfactory plugging of abandoned water wells. The Contractor shall comply with all state and local laws and ordinances relating to performances of the work. All work is to be done in accordance with the Michigan Public Health Code, Act 368, P.A. of 1978, Part 127, known as the Ground Water Quality Control Act and Administrative Rules adopted thereunder and specifications described herein.

B. Existing Conditions: The Contractor shall be responsible for determining the existing condition of the well to be abandoned and comply with Michigan Department of Environmental Quality Standards and these specifications for Abandonment.

C. Locations: The site has not been evaluated by the Michigan Department of Environmental Quality. It is recommended that all bidders thoroughly examine the Technical Specifications for this Work and make a personal examination of the site(s) of the proposed Work.

1. The State of Michigan does not guarantee the depth of the wells to be abandoned and the Base Proposal Sum will be payment in full for well abandonment, regardless of the depth.

2. It should be realized that in some cases it may be impractical to plug a well due to its location, such as well located under a structure. In the event the Contractor determines the well to be inaccessible for plugging, the Contractor shall notify the Department of Natural Resources and the Department of Environmental Quality.

3. It may also become apparent during the course of site investigation that the exact location of the well to be abandoned may not be visually evident. In that case it is recommended that the Contractor use other methods for locating the abandoned well such as a metal detector, magnetometer or electro-magnetic anomaly detector.

D. Inspection: All Work shall be subject to the order of the Michigan Department of Environmental Quality representative who shall be kept informed at all times as to the status of the Work. The representative must be on-site when Work is performed unless the Contractor is given approval to proceed in his absence.

1.02 QUALITY ASSURANCE:

A. Registration: The Work shall be completed by a registered Water Well Driller contractor registered in the State of Michigan, who shall comply with all applicable rules, regulations, and guidelines published by the State of Michigan regarding the performance of the work.

B. Protection of Property: The Contractor shall properly protect all surface and subsurface structures and surrounding areas from damage which may result from the methods employed in performing the work. The Contractor shall be responsible for any damages to such structures resulting from his operations. Damaged property shall be repaired or replaced to a condition which is equal to that which existed prior to damage.

C. Disposal of Water: The Contractor shall make all provisions necessary for conveying any water encountered in performing the work away from adjacent structures, and shall take measures necessary to prevent erosion and/or flooding of the site and adjacent properties. The Contractor shall also prevent discharge water from flowing over any adjacent wells or sewage disposal system.

D. Safety: The Contractor shall comply with all applicable laws and regulations governing the furnishing and use of safeguards, safety devices, and protection equipment. The Contractor shall take any necessary precautions to protect the life and health of employees and the public in the performance of the work.

1.03 UTILITIES FOR CONSTRUCTION: Unless otherwise provided for in these specifications, the Contractor shall furnish his/her own source of electricity, fuel and water required to perform the work, and shall bear the cost of these services.

1.04 NOTIFICATION OF UTILITIES: The Contractor shall comply with Act 53, P.A. of 1974, by notifying the public utilities of the proposed drilling or excavating at least 48 hours prior to the commencement of such activities by contacting MISS DIG at 1-800-482-7171.

1.05 TIME OF COMPLETION: The Contractor shall complete all work within three (3) weeks from date of executed contract.

1.06 METHOD OF MEASUREMENT AND BASIS OF PAYMENT:

A. Excavation of Well: Payment for locating buried wells, excavation, backfilling, and site restoration will be included in the Base Proposal Sum.

B. Casing Removal, Ungrouted Annulus: Payment for removal of well casing and grouting annulus if required will be included in the Base Proposal Sum.

C. Well Plugging: Payment for plugging of the well will be included in the Base Proposal Sum.

D. Existing Concrete Pad Removal and Disposal: Payment shall be included in the Base Proposal Sum.

PART 2 - PRODUCTS

2.01 PLUGGING MATERIALS:

A. Neat Cement Slurry: A mixture of 1 bag (94 pounds) of Type 1 Portland cement to not more than 6 gallons of clean water.

B. Concrete Slurry: A mixture of 1 bag (94 pounds) of Type 1 Portland cement to an equal amount of dry sand to not more than 6 gallons of clean water.

C. Granular Bentonite/Polymer Slurry: A mixture of coarse-ground (8-20 mesh) granular sodium bentonite and slurry composed of a nontoxic, nonfermenting liquid polymer and clean water. The grout shall be prepared with the following proportions: 1 quart of polymer per 100 gallons of water to which bentonite is added at 1.5 pounds per gallon of slurry.

D. Coarse Grade Bentonite: Crushed high swelling sodium bentonite. The minimum particle size shall be 1/4 inch in diameter.

E. Bentonite Pellets: A preformed compressed tablet made of high swelling sodium bentonite. The minimum pellet size shall be 1/4 inch in diameter.

PART 3 - EXECUTION

3.01 GENERAL REQUIREMENTS:

A. Measurements: Prior to plugging the existing well, the Contractor shall make appropriate measurements to verify well depth.

B. Records: The Contractor shall maintain a complete and accurately written record of the plugging operation. The information to be recorded shall include the type of plugging material used, volume of material used and method of placing plugging material into the well. Such written record shall be available for inspection on-site at the request of the Inspector. The completed well plugging report shall be submitted to the Michigan Department of Environmental Quality within 60 days of completion of the plugging operation. Evidence of filing of plugging report shall be submitted with final invoice.

C. Water necessary for preparing plugging slurries shall be obtained by the Contractor at his own expense from a source satisfactory to the Michigan Department of Environmental Quality and shall be conveyed in a clean, sanitary container.

3.02 REMOVAL OF WELL MATERIALS: The Contractor shall remove all materials from the well which may hinder its proper abandonment. This shall include pumping equipment, drop pipe, and packer jets. Removal of bremer check valves is not required. The Department of Natural Resources shall exercise the right to request that pumping equipment, hand pumps and various other items may remain in their possession. Any existing concrete slab material shall be removed and disposed off site by the Contractor unless otherwise requested by the Owner.

3.03 CASING REMOVAL, UNGROUTED ANNULUS:

A. When Required: Casing and screen shall be removed where specified by the Michigan Department of Environmental Quality and local health department.

B. Procedure: The casing shall be removed by applying a lifting force to the casing with the drilling rig, jacks, jarring head, or trip casing spear or a combination of the above methods. In overburden, the plugging material shall be removed by applying a lifting force to the casing with the drilling rig, jacks, jarring head, or trip casing spear or a combination of the above methods. In overburden, the plugging material shall be placed into the well after the screen is removed and prior to the removal of casing so that the plugging material is in contact with the formation material as the casing is being pulled.

C. When Not Required: Where removal of the casing is not required, as determined by the Michigan Department of Environmental Quality representative or in cases where the casing cannot be removed, the Contractor shall cut the casing off at least 48 inches below grade and a permanent steel plate or cap welded or threaded to the casing, or a cement plug poured in the casing.

D. If a visible open annulus around the well casing is present, the annulus shall be sealed in accordance with Section 3.05.E of these specifications.

3.04 SALVAGE RIGHTS: All casing, drop pipe packer jets, check valves, screens or other fittings removed from the well by the Contractor shall be considered property of the Contractor and promptly removed from the site upon removal unless otherwise specified by the Owner (Department of Natural Resources.)

3.05 PLUGGING PROCEDURES:

A. Slurry Mixture and Pumping: When neat cement slurry, concrete slurry, or granular bentonite/polymer slurry are used they shall be placed into the well by pumping down a tremie pipe at least 1" I.D. which has been placed to the bottom of the well to avoid segregation or dilution of sealing materials. The slurry wall shall be applied in one continuous operation until the well is filled. The tremie pipe shall be slowly raised while the slurry is applied, keeping the end of the tremie pipe submerged in the slurry at all times. Equipment used for pumping cement or bentonite slurries shall be of the diaphragm, piston, or helical type. The volume of the slurry mixing tank shall be greater than the volume of the slurry required to plug the well to enable single batch mixing of the slurry. The Contractor shall be responsible for determining the amount of slurry required to plug the well.

B. Portland Cement Slurries: Neat cement or concrete slurries shall be prepared by adding cement or sand-and-cement to the calculated required volume of clean water. The mixture shall be recirculated through the pumping equipment until it is adequately mixed and free of lumps, then immediately pumped into the well before initial set of the cement occurs.

C. Bentonite/Polymer Slurry: Granular bentonite/polymer slurry shall be mixed by adding the liquid polymer to clean water and circulating the mixture through the pump and back into the mixing tank. Circulation through the pump is then stopped. Granular bentonite shall then be spread evenly over the surface of the mixing tank while a paddle-type mixer, shovel or hoe is used to mix the bentonite. Mixing shall continue until the slurry is free from lumps. The slurry shall then be immediately pumped through a tremie pipe into the well before the bentonite granules are extended.

D. Coarse Grade or Pelletized Bentonite: Where coarse grade or pelletized bentonite is used, it shall be poured slowly into the top of the well to avoid bridling of material in the casing or borehole. Pellets or coarse bentonite shall be placed into the well either by the handful, by using a scoop with a volume no larger than one cup, or by pouring at an even rate not to exceed 5 minutes per 50 pounds of material. Fine bentonite particles which accumulate in the bottom of the shipping container shall not be used. A work pipe or weighted drop string shall be placed in the well and the height of accumulated plugging material measured after each 50 pounds of bentonite is placed in the well. If measurement indicates that bridging of plugging material has occurred, a work pipe, drill rods, or other weighted device shall be run into the casing to break the bridge and plugging operation shall continue until the bentonite appears at surface. Water shall then be placed into the casing to promote expansion of the bentonite above the static water level.

E. Plugging of the Annulus. May be accomplished by any of the following methods:

1. Jet tremie pipe along side of the abandoned well casing to the bottom of the open annulus and grout the entire annulus from the bottom up to the surface.
2. Remove the abandoned well casing and grout the entire borehole from the bottom to the surface.
3. Perforate or rip the abandoned well casing and pressure grout the open annulus and casing.
4. Over drill the abandoned well casing and grout the entire borehole from the bottom up to the surface.

3.06 SITE RESTORATION: The Contractor shall restore the site to a condition that reasonably approaches the original condition of the property prior to the start of work. After all trenches are backfilled, the work area shall be graded to conform to existing ground contours.

3.07 SITE CLEAN UP: Upon completion of the work, the Contractor shall remove from the premises all materials, debris, tools and machinery. Plugging material, grease or other materials which have accumulated on structures or around the premises shall be removed. The Contractor may dispose of these materials on-site with permission of the property owner.

END OF SECTION

DIVISION TWO - SITE WORK

WATER WELL SECTION 02670

PART ONE - GENERAL

1.01 DESCRIPTION

A. The work to be done shall consist of furnishing all labor, materials, and equipment necessary for the complete and the satisfactory construction and testing of 1 (one) 4" PVC water supply wells at two different campgrounds, in accordance with the plan and as specified in the proposal. The **Contractor** shall procure all permits, certificates, and licenses required by law and shall comply with all Federal, State and local laws and ordinances relating to the performance of the work. All work is to be done in accordance with Michigan Department of Environmental Quality, Drinking Water and Radiological Protection Division, Ground Water Supply Section's Ground Water Quality Control Methods as approved in Part 127 of Act 368, P.A. 1978 and Act 399, PA 1976 of the Public Health Code, and as specified herein.

B. The exact location of the proposed well will be determined by the Owner. The Contractor shall not locate this well closer than 75 feet to any Vault Toilet or other sanitary waste facility. It is anticipated that a safe and suitable water supply may be found at a depth of approximately _100_ feet. However this depth is approximate and not guaranteed to be accurate. The desired discharge shall be _5_ or more gallons per minute as determined in accordance with the requirements of the aquifer test.

C. All work shall be subject to the order of the Owner or his representative who shall be kept informed at all times as to the status of the work. The Owner must be on site when work is performed unless the Contractor is given prior approval to perform the work in his absence.

1.02 METHOD OF MEASUREMENT AND BASIS OF PAYMENT

A. Mobilization - Shall be paid for at the contract unit price and shall include moving all equipment, tools, and material to the proposed site, site preparation, cleanup and providing well caps, and any other miscellaneous cost the Contractor feels necessary to construct the well. Payment for mobilization will be made only once.

B. Drilling Well in Drift or Rock - Shall be paid for at the contract unit price per linear foot drilled as measured in place, and shall include all labor and equipment to drill the well; obtaining, analyzing, and logging samples encountered.

C. Furnish and Install Casing - Shall be paid for at the contract unit price per linear foot of casing left in the finished well and shall include all labor, equipment, and materials to install casing pipe including a drive shoe installed. **Removing or pulling back casing or grouting back will be incidental** to this item of work and not paid for as a separate item.

D. Furnish and Install Well Screen and Fittings - Shall be paid for at the contract unit price per linear foot, measured in place, and shall include all labor, equipment and materials to install the well screen including 2 feet of blank, packer, bottom plug and related fittings. Should it be found necessary to use a different type of screen than specified, additions or deductions in the amount to be paid will be made equivalent to the **difference** in the cost of the screen.

E. Well Development and Capacity Test - Shall be paid for at the contract unit price per lump sum for all the development tools and equipment and shall include all labor, equipment and materials necessary for surging the well and developing it to the specified capacity. This item shall also include performing the complete test as specified. Setup is considered incidental to pump testing. Disinfecting the well and test pump shall be incidental to this item of work and not paid for separately.

F. The Well Hand Pump shall be supplied by the Owner and installed by the Contractor.

G. The Concrete Slab shall be paid for at the contract unit price per lump sum.

PART TWO - MATERIALS

2.01 CASING

A. All permanent well casing shall be new material, PVC well casing pipe, SDR 21 (ASTM F-480) or Schedule 40 (ASTM D-1785). The well shall be constructed with nominal 5-inch pipe. All well casing shall be marked with the appropriate ASTM designation.

B. Well Casing shall be sleeved with a minimum of 10 foot long 6" nominal diameter steel casing per plan below pump at top of well.

2.02 WELL SCREEN

A. All well screen shall be a Johnson Watermark Superwire Wound, 304 Type Stainless Steel, continuous slotted type screen or an equal approved by the Architect/Engineer. All intake openings shall be designed so as to prevent clogging and shall be free from jagged edges, irregularities, or other defects that will hinder passage of sand during the development of the well or accelerate clogging and corrosion. It is expected the length of screen will be not less than 4 feet exclusive of the blank section, depending upon the nature and depth of the

water-bearing stratum penetrated. The Contractor shall determine the actual length of screen and slot size of the screen based on the mechanical analysis of samples from the water-bearing formation.

B. The screen shall be provided with two feet of blank and with the necessary fittings to close the bottom and provide a tight seal between the top of the screen and the well casing. A rubber type packer shall be used at the top. All fittings except the packer and bottom plug shall be of stainless steel. All welding on the screen shall be done with the stainless steel welding rods. Blank shall consist of Schedule 40 or SDR 21 PVC.

2.03 HAND PUMP AND ACCESSORIES

A. Hand pump shall be supplied by the Owner and installed by the Contractor.

PART THREE - EXECUTION

3.01 GENERAL

A. The well shall be constructed using a rotary drilled method with the annular space around the casing tightly sealed by means of an approved grouting method.

B. Water necessary for drilling purposes shall be obtained by the Contractor at his own expense from a source satisfactory to the Owner. Water used for drilling purposed other than from the well itself shall be chlorinated clean water containing a free chlorine residual at the time of use and conveyed in clean, sanitary containers.

C. Drilling muds shall be disposed of in an approved manner.

D. The Contractor shall keep a complete and accurately written log of all material encountered in the drilling of the well. The written log, together with the static water level and other pertinent information relative to the well, shall be filed with the Owner. The Contractor shall take representative samples of ever change in formation, and for every five feet above the aquifer, and for every two feet within the aquifer, if requested by the Owner. The Contractor shall be responsible for obtaining water samples for bacteriological and chemical analysis.

E. Hand Pump - Install hand pump with appurtenances according to manufacturer's recommendations. Depth of cylinder to be determined by the pumping capacity of the well upon review by the Owner.

F. The well platform shall be constructed to the details as shown on the attached plans.

G. Concrete - MDOT Standard Specification 35S, 3500 psi at 28 days.

H. Reinforcing Bars - Deformed steel, intermediate grade, ASTM A-625, or A-617.

I. Anchor Bolts - Hot-dipped galvanized steel.

3.02 WELL DEVELOPMENT

A. The Contractor shall develop the well to effectively extract from the water-bearing formation, the maximum practical quality of sand, drilling mud, and other fine materials in order to bring the well to maximum yield per foot of drawdown and to a sand free condition. This work must be done in a manner that does not cause undue settlement and disturbance of the strata above the water-bearing formation and will not disturb the seal affected around the well casing and thereby reducing the sanitary protection otherwise afforded by a seal.

3.03 CAPACITY TESTING

A. After developing the well, a capacity test shall be run by methods as specified herein or approved by the Owner. The item "Capacity Test" shall include supplying all equipment including the pump installation and dismantling, labor and materials necessary to perform the capacity test and obtain and analyze required water samples.

B. The capacity test shall be performed with the pump operating for the specified time, continuously unless extended or shortened by the direction of the Owner. The pumping rate for the capacity test shall be equal to or greater than the desired capacity of the proposed well. A pump shall be furnished by the Contractor that has adequate capacity to pump the required quantity of water at a uniform rate.

C. The Contractor shall furnish a reliable and approved means of measuring the quantity of water being pumped. Any on of the following three methods shall be accepted: Weir box and hook gauge, calibrated orifice, or reliable water meter.

D. The following information shall be obtained during the capacity test:

1. Static water level
2. Pumping level determined and recorded at intervals during the pumping test
3. Recovery readings after pumping is stopped

3.04 DISINFECTION OF WELL AND TEST PUMP

A. After development has been completely constructed, it shall be thoroughly cleaned of all foreign substances including tool, timbers, rope, debris of any kind, cement, oil, grease, joint dope, and scum. The casing pipe shall be thoroughly swabbed, using alkalis, if necessary, to remove oil, grease or joint sealant. The well shall then be disinfected with a chlorine solution. Disinfection of the wells and disposal of the chlorinated solution shall be in accordance with 8.831.1 and 8.831.2 of the Michigan Safe Drinking Act

B. The Contractor shall be responsible for obtaining the following water samples and delivering said samples to the Michigan Department of Public Health for testing:

1. One Test - Standard partial chemical analysis

2. Two Test - Bacteriological, samples taken after chlorination, 8 hours apart, showing 0.00 chlorine residual

3.05 ABANDONMENT OF EXISTING DOMESTIC WATER WELL

Abandonment of existing well shall follow procedures as outlined in Specification Section 02685 (Water Well Abandonment).

END OF SECTION

DIVISION TWO - SITE WORK

CONCRETE PAD SECTION 02523

PART ONE - GENERAL

1.01 DESCRIPTION

A. This item of work shall consist of constructing a reinforced concrete pad upon a prepared base as shown on the plans and specified herein.

PART TWO - MATERIALS

2.01 CONCRETE CONSTRUCTION ITEMS

A. The following items shall meet the requirements specified in the designated section of the MDOT Standard Specifications (1990 Edition) as follows;

1. Concrete, Grade 35S .... Section 7.01
2. Joint Filler .... Section 8.16
3. Concrete Curing Materials .... Section 8.24
4. Steel Reinforcement .... Section 8.05

PART THREE - EXECUTION

3.01 GENERAL

A. Preparing the base and construction of the concrete pad shall be accomplished in accordance with the appropriate sub-sections MDOT Standard Specifications 6.11 (1990 Edition).

END OF SECTION

HAND PUMP ON A 4" SCREENED WELL

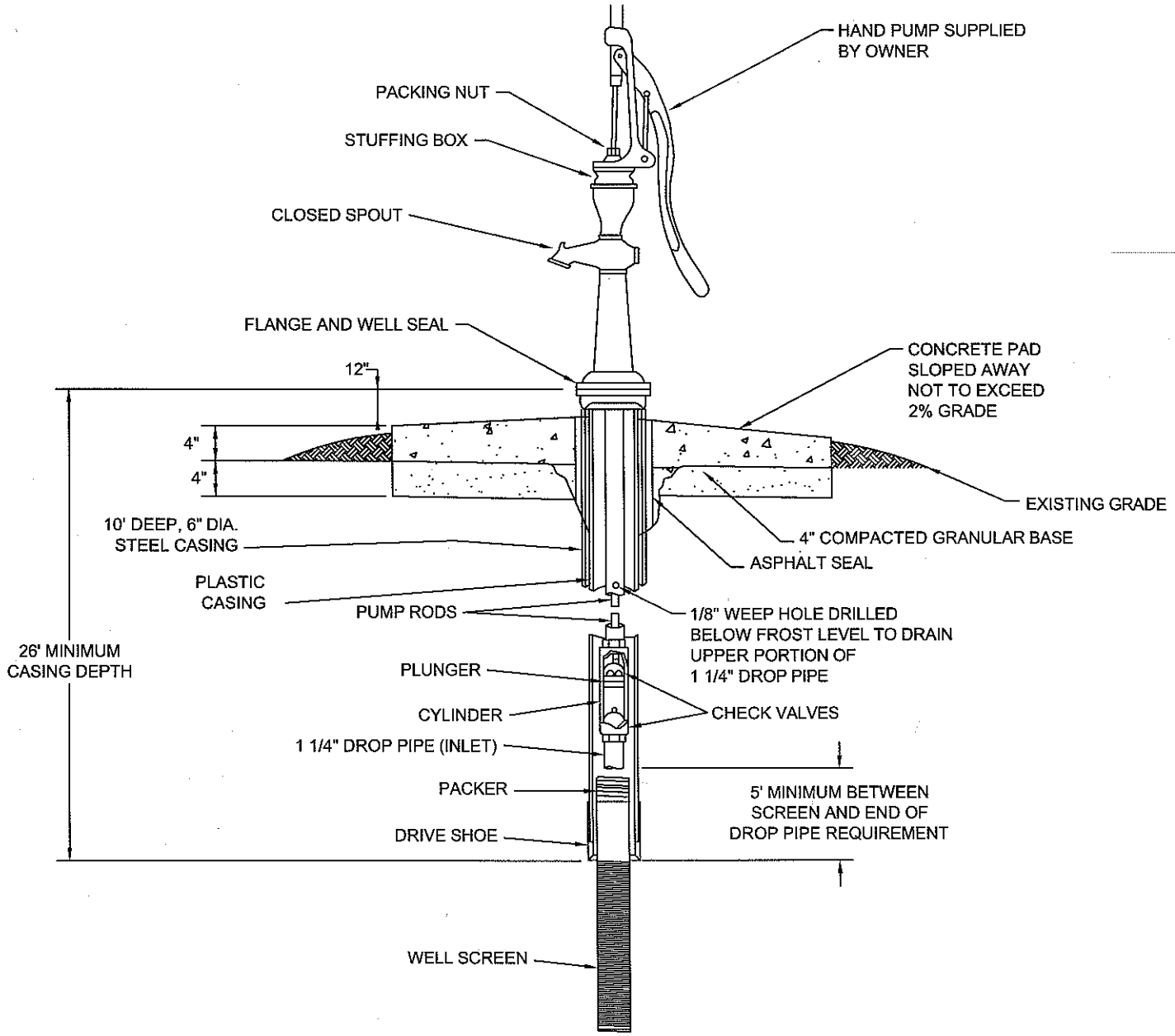

PROJECT NO.	24-3211
INDEX	53100
PCA	66108
DRAWN BY	SK
DESIGNED BY	SK

HAND PUMP ON 4" SCREENED WELL

Fisherman's Island State Park

New Water Well and Hand Pump Installation

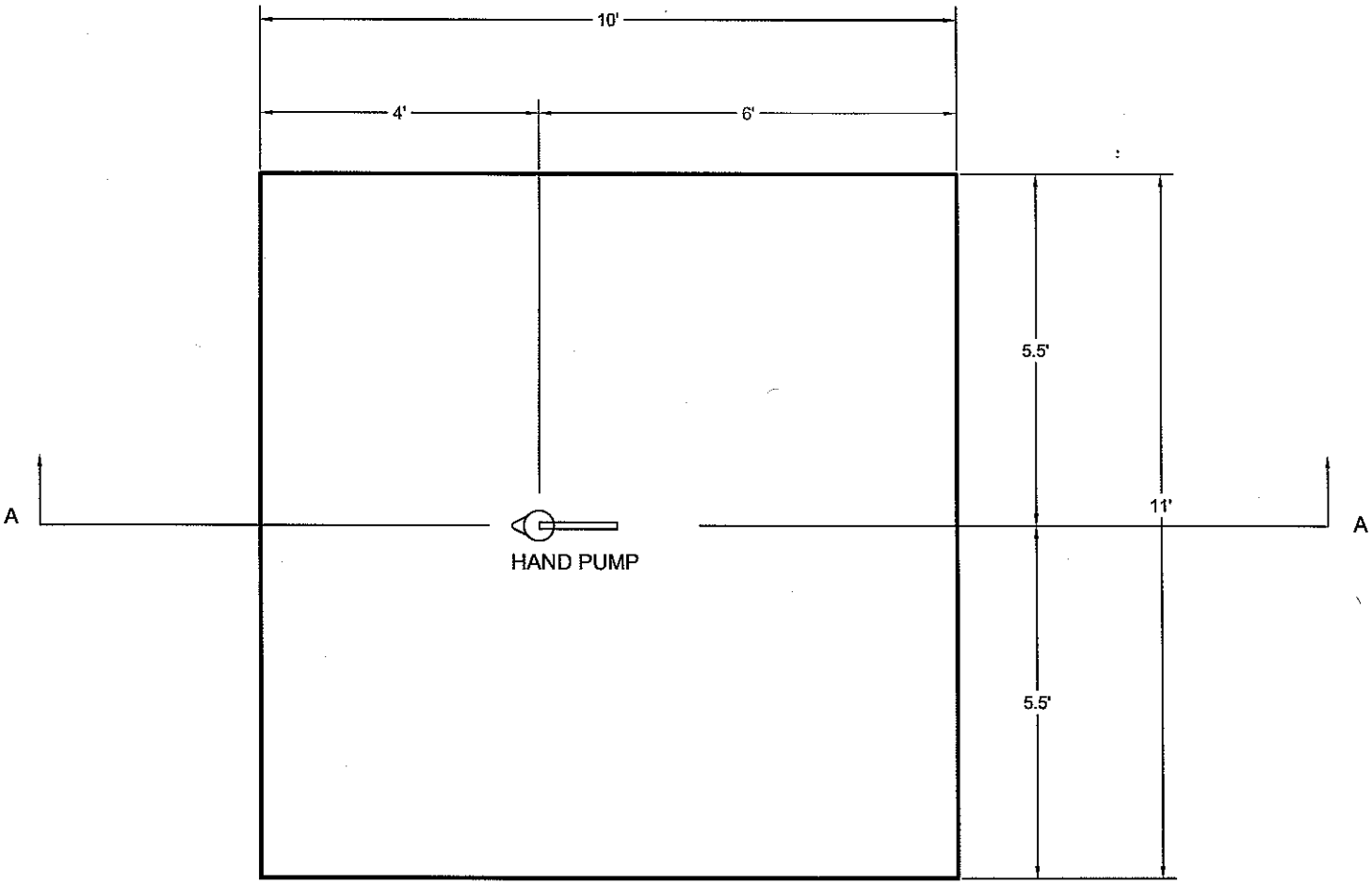

PLAN VIEW

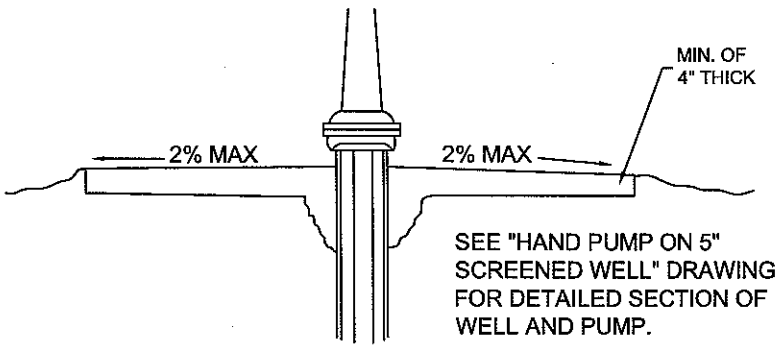

PROJECT NO.	24-3211
INDEX	53100
PCA	66108
DRAWN BY	SK
DESIGNED BY	SK

CONCRETE PAD DETAIL

Fisherman's Island State Park
New Water Well and
Hand Pump Installation