INSTALLATION

RP3000

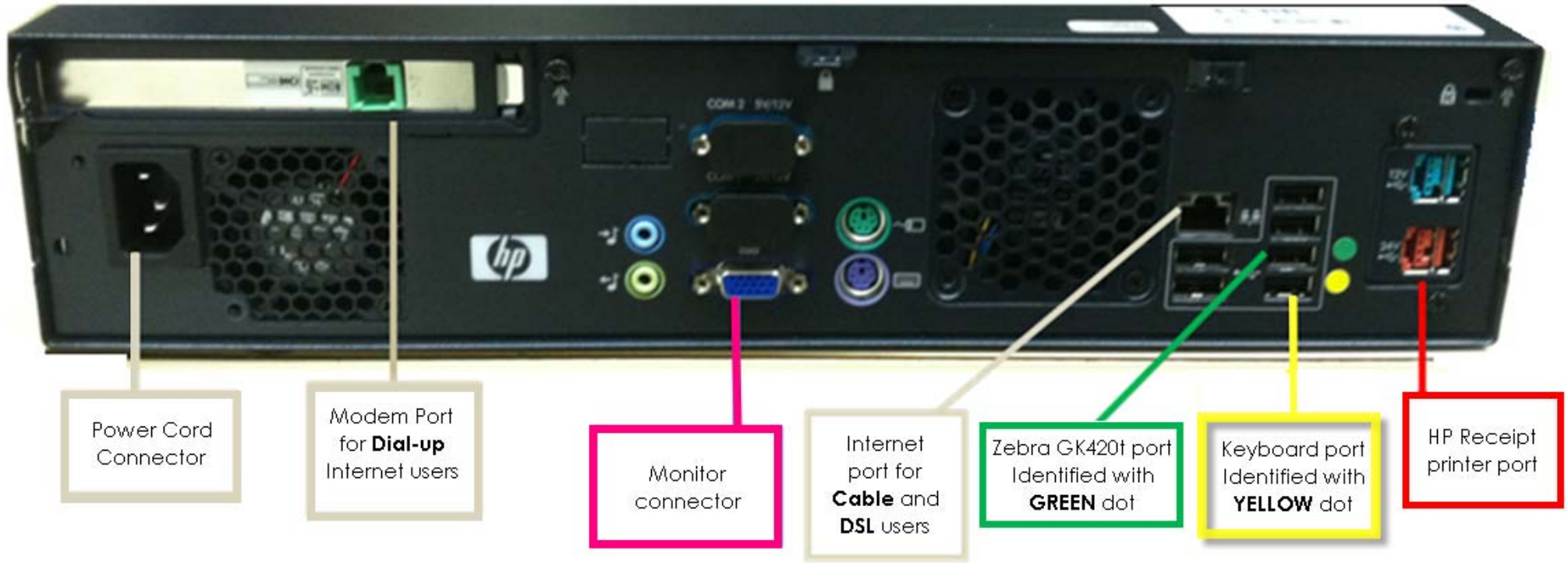

RECEIPT PRINTER

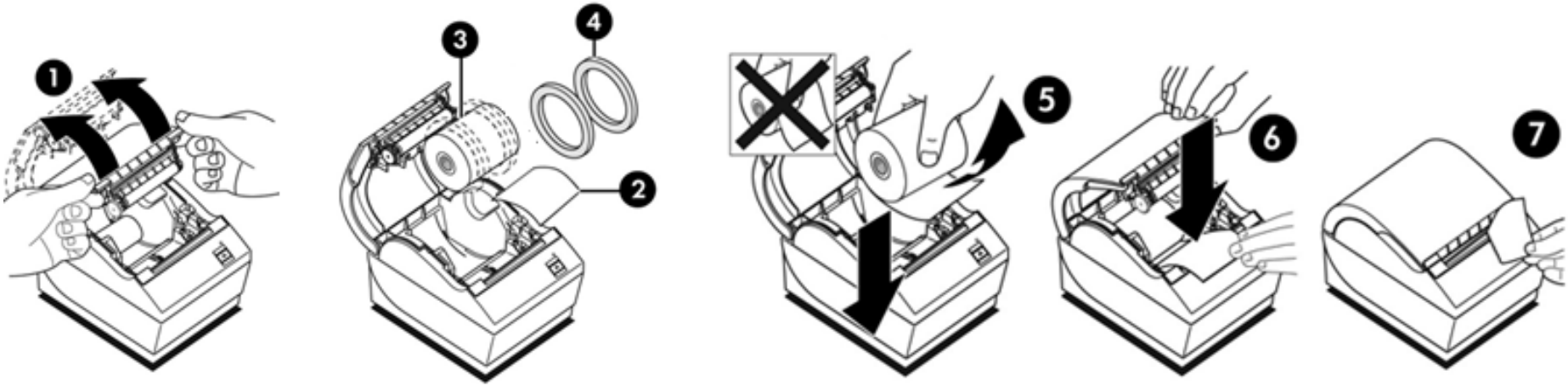

ZEBRA GK420T RIBBON

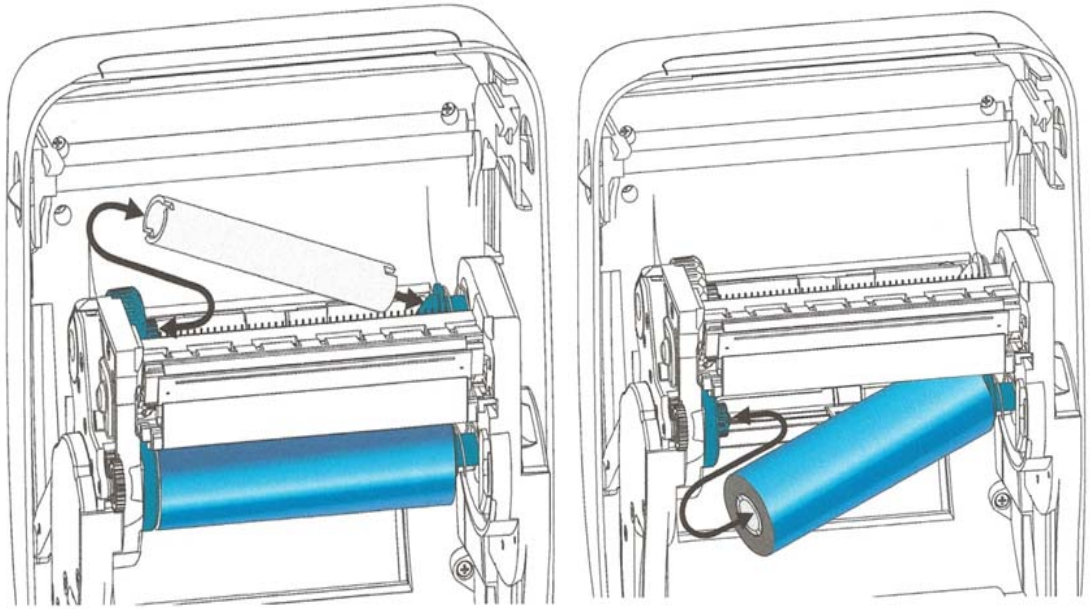

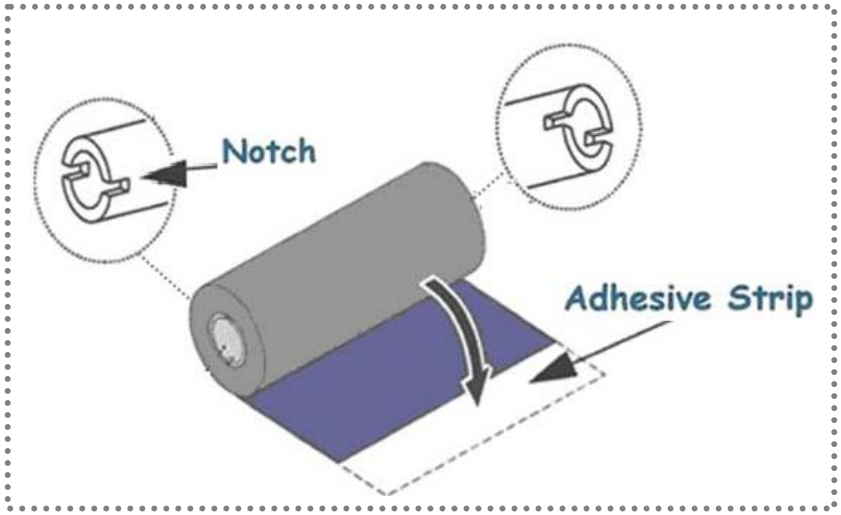

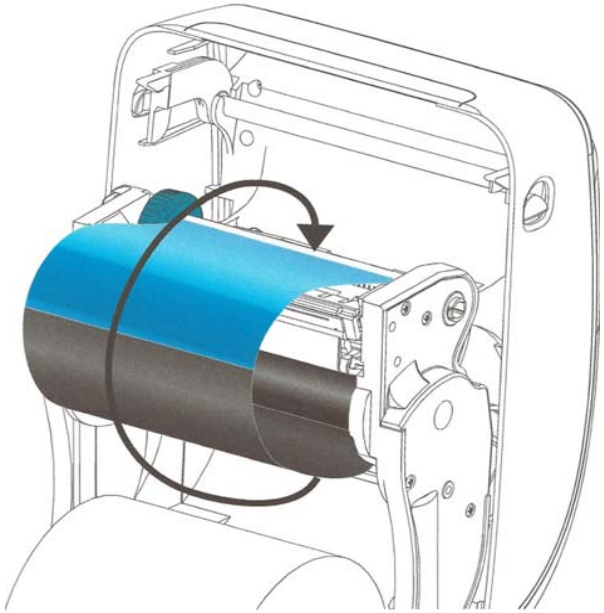

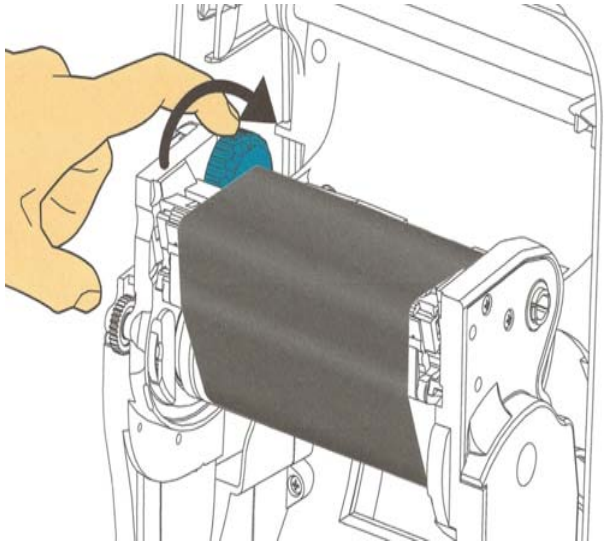
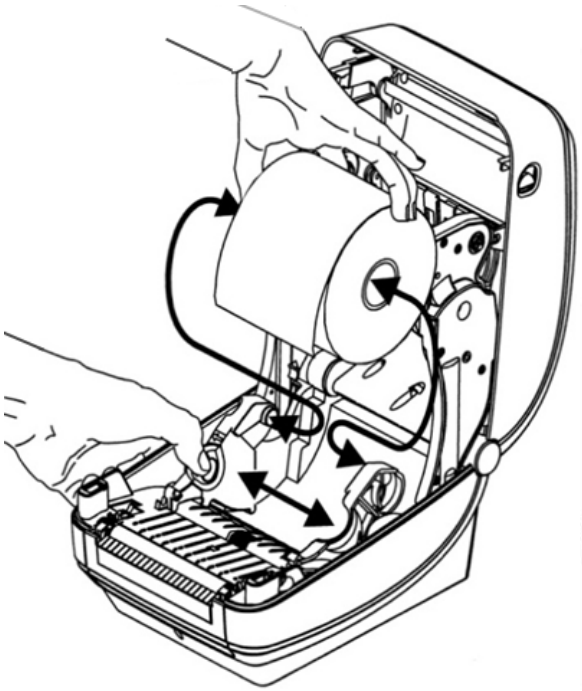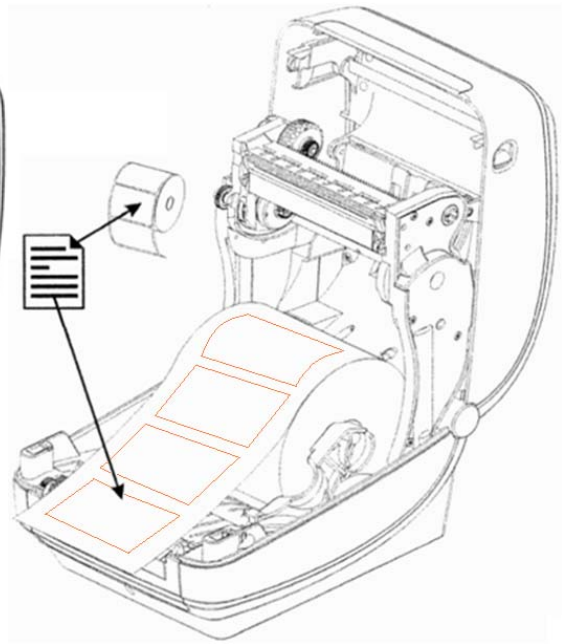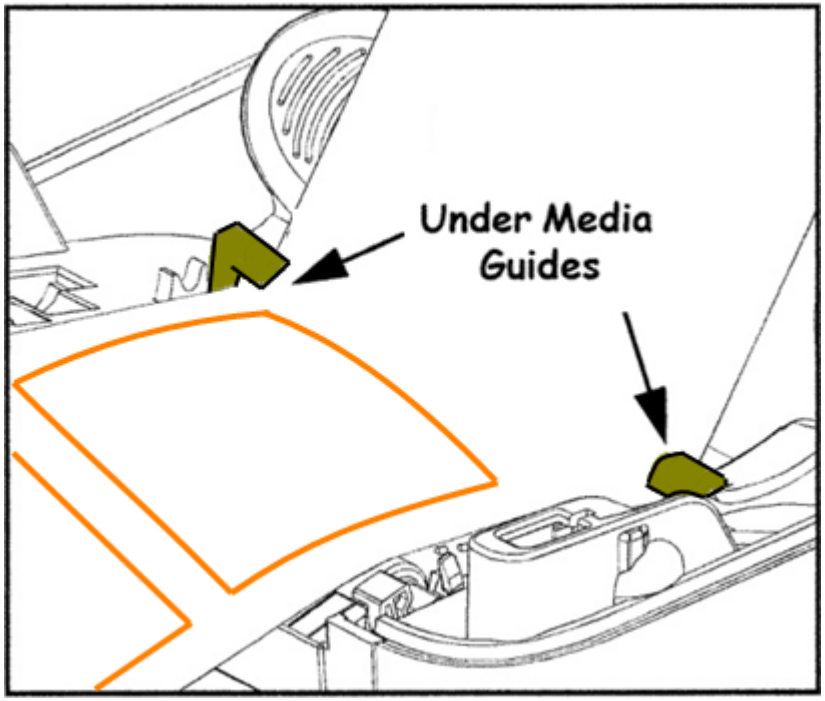
ZEBRA GK420T LICENSE STOCK