8" 10 Deg MLBD Shoe

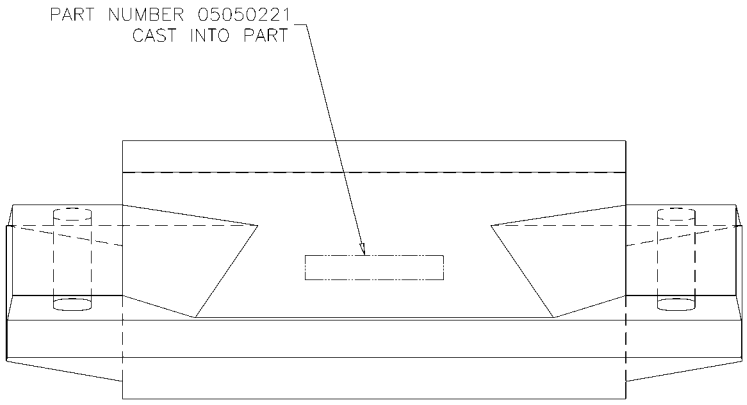

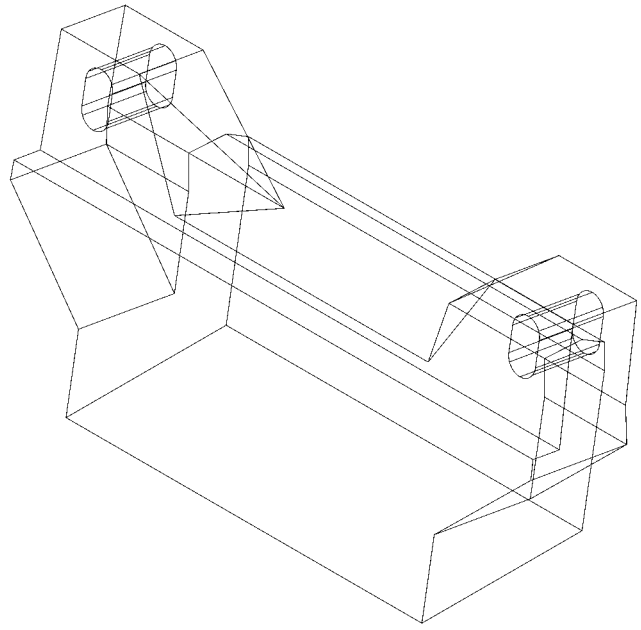

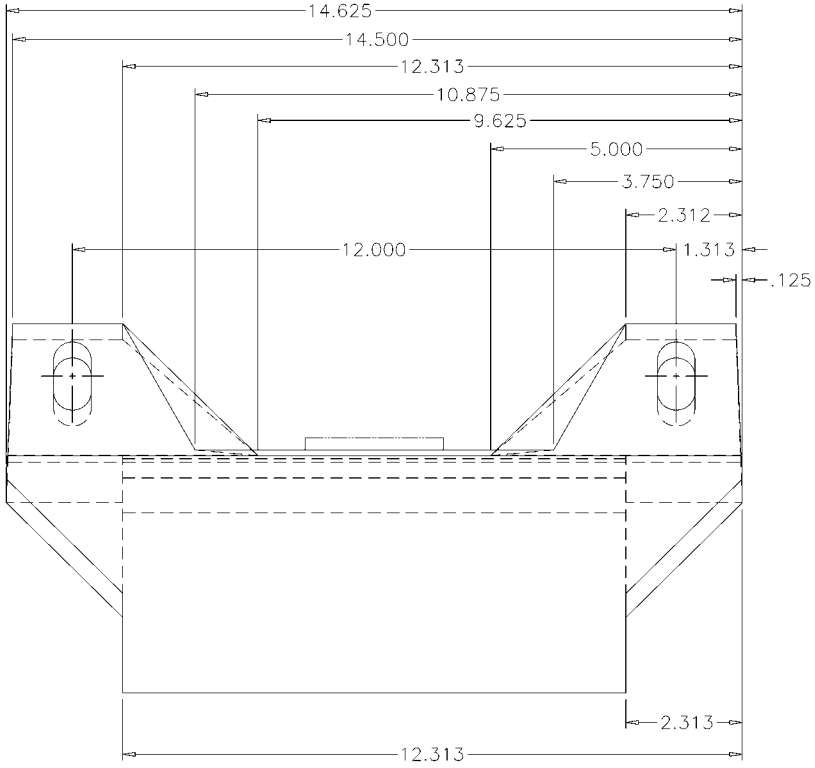

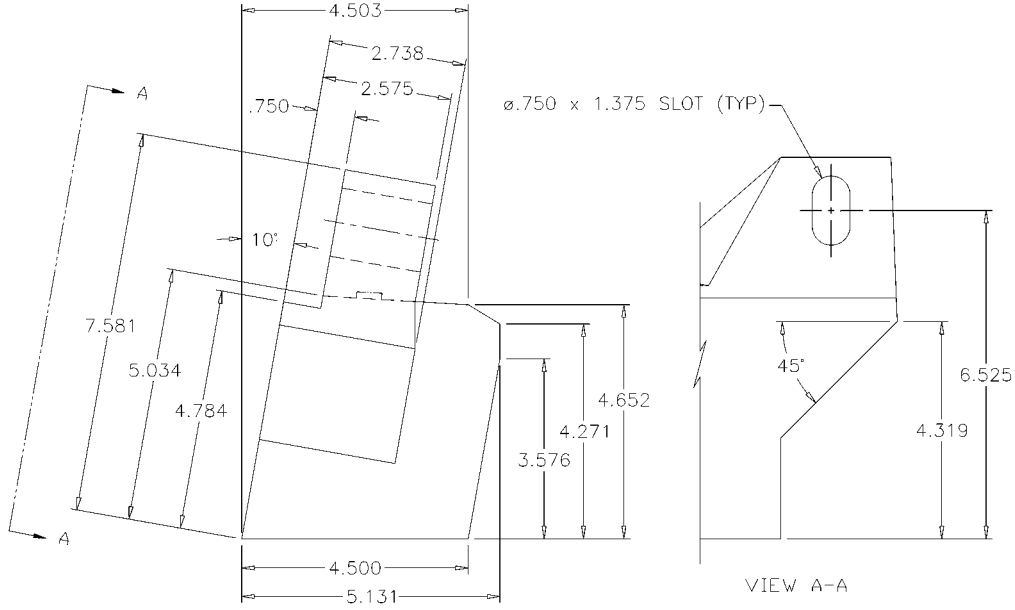

MATERIAL: CAST IRON