RICK SNYDER
GOVERNOR

STATE OF MICHIGAN
DEPARTMENT OF LICENSING AND REGULATORY AFFAIRS
BUREAU OF CONSTRUCTION CODES
IRVIN J. POKE
DIRECTOR

STEVE ARWOOD
DIRECTOR

March 3, 2014

TO: Members of the Elevator Safety Board

FROM: C.W. Rogler, Chief, Elevator Safety Division CWR

SUBJECT: Variance Request for ThyssenKrupp Elevator.

APPLICANT REPRESENTATIVE:
Jeremy Akers, Construction Superintendent

APPLICANT:
ThyssenKrupp Elevator
35432 Industrial
Livonia, MI 48150

AUTHORITY:
MCL 408.808(1)(c) of the Elevator Safety Board Act, 1967 PA 227

VARIANCE REQUEST:
Request has been made by ThyssenKrupp Elevator for a variance request from ASME A17.1-2007 regarding a product approval for TAC32 HMRL Hydro MRL.

APPLICABLE CODE SECTION:
ASME A17.1-2007

FINDINGS:
ASME A17.1-2007

RECOMMENDATION: Staff recommends that the variance only be approved if the board believes reasonable safety will be secured.

ThyssenKrupp Elevator

2/28/2014

State of Michigan Elevator Safety Division
P.O. box 30255
Lansing MI, 48909
Attn: Cal Rogler

Subject: ThyssenKrupp Elevator New Controller Introduction

Re: TAC32 HMRL Elevator Controllers

ThyssenKrupp Elevator is requesting variance approval to install our new ENDURA MRL® series of elevators. The TAC32 Hydro MRL is a machine room-less hydraulic elevator (using the familiar TAC32 controller) system with the hydraulic machinery in the pit and the elevator controller accessible at the second landing.

For technician safety a service panel collocated with the controller provides operation of the shutoff valve, lowering valve and adjustment of the main electronic valve. System pressure readings are also available through use of a readout located in the service panel and a pressure transducer located at the valve on the machine in the pit. To provide these safety features TKE TAC32 Hydro MRL Controller has achieved ASME A17.7 AECO certification on these four items.

In demonstration of compliance, the TAC32 Hydro MRL Controller has achieved ASME A17.7 AECO certification on these four items. The AECO certification document is attached, as well as current product information, for your review.

We look forward to your consideration and if you have any questions, please do not hesitate to contact me.

Sincerely,

Jeremy Akers
Construction Manager
ThyssenKrupp Elevator
35432 Industrial
Livonia MI, 48150
734-462-5644

LIFTINSTITUUT

CERTIFICATE OF CONFORMANCE

Acting under ASME A17.7.1/CSA B44.7.1 issued by Liftinstituut B.V.
Identification number ANSI AECO #0842
(AECO = Accredited Elevator/Escalator Certification Organization)
Certification system 3 according to ISO Guide 67: 2004

Certificate no.	:	NA13-0842-1004-015-01	Revision no.: -
Description of the product	:	Remote shut-off valve, remote pressure monitoring, Remote lowering valve, and electronic low pressure detection	
Type	:	ThyssenKrupp, MRL Hydro	
Model no.	:	Endura	
Name and address of the manufacturer	:	ThyssenKrupp Elevator Americas 9280 Crestwyn Hills Drive Memphis, TN 38125 USA	
Name and address of the certificate holder	:	ThyssenKrupp Elevator Americas 9280 Crestwyn Hills Drive Memphis, TN 38125 USA	
Certificate issued on the basis of the following requirements	:	ASME A17.7-2007 / CSA B44.7-07 (I-3 Sub Systems)	
Test location	:	ThyssenKrupp Elevator Americas 6266 Hurt Rd Horn Lake, MS 38637-2306 USA	
Date and number of the laboratory report	:	None	
Date of verification of conformance	:	January 2013 – August 2013	
Annexes with this certificate	:	Certificate of Conformance Report no: NA13-0842-1004-015-01	
Additional remarks	:	For GESRs, SPs and other information see supporting report.	
Conclusion	:	The Sub System meets the requirements of the ASME A17.7-2007 / CSA B44.7-07, taking into account any additional remarks mentioned above.	

Issued in Amsterdam
Date of issue : August 28th, 2013

Valid thru : August 28th, 2016

ing. A.J. van Ommen
Manager Business Unit
Certification

Certification decision by

TAC32 H-MRL

Code Deviations

This document contains confidential information proprietary to ThyssenKrupp Elevator

Code Deviations (addressed by ASME A17.7)

Shutoff Valve
Code – (i.e ASME A17.1-{code edition /year})
A17.1-2010/B44 requirement 3.19.4

3.19.4.1 Shutoff Valve. A *manually* operated shutoff valve shall be provided between the hydraulic machines and the hydraulic jack and shall be located *outside the hoistway* and adjacent to the hydraulic machine.

Where the hydraulic machine is located in the hoistway, the manually operated shutoff valve shall be permitted to be located inside the hoistway, provided that it is accessible from outside the hoistway to elevator personnel only (see 8.1).

Requested acceptance:

The manual shutoff valve is replaced with aelectronically assisted valve operated by a constant pressure key switch located in the service panel. The service panel is located at the 2nd landing and accessible from outside the hoistway. The service panel has LED indicators to show the states (open/closed) of this electronically assisted shutoff valve. The service panel is accessible only by Type 1 security. The included LiftInstituut AECO Certificate of Conformance recognizes this electronically assisted valve as "Remote Shut-off Valve" in the certification documentation.

Manual Lowering Valve
Code - A17.1 2010/B44 requirement 3.19.4

3.19.4.4*Manual* Lowering Valve A manually operated valve, located on or adjacent to the control valves, shall be provided and identified, which permits lowering the car at a speed not exceeding 0.10 m/s(20 ft/min). This valve shall be so marked to indicate the lowering position.

Where the hydraulic machine is located in the hoistway, the manual lowering valve shall only be accessible to elevator personnel from outside the hoistway (see 8.1).

Requested acceptance:

The manual lowering valve is replaced with electronically assisted valve operated by a constant pressure key switch located in the service panel. The service panel is located at the 2nd landing and accessible from outside the hoistway. The service panel is accessible only by Type 1 security.

There is a "stop" switch, located in the service panel, which is required to activate the manual lowering valve. The key switch must be keyed to the down position in order to activate manual lowering. These precautions ensure safe operation of the valve. The included LiftInstituut AECO Certificate of Conformance recognizes this electronically assisted valve as "Remote Lowering Valve" in the certification documentation

This document contains confidential information proprietary to ThyssenKrupp Elevator

Pressure Gauge Fitting
Code

3.19.4.5 Pressure Gauge Fitting. A pressure gauge fitting with shutoff valve shall be provided on jack side of the check valve or immediately adjacent to the hydraulic control valve. Where the hydraulic machine is located in the hoistway, the pressure gauge fittings shall only be accessible to elevator personnel from outside the hoistway (see 8.1).

Requested acceptance:

System pressure monitoring is accomplished via an electronic pressure monitoring arrangement.
This monitoring arrangement provides an electronic pressure transducer (on the jack side of the check valve) with remote LCD display located at the 2nd landing service panel accessible from outside of hoistway.
This LCD display shows system pressure directly eliminating the need for a hydraulic pressure fitting. If the LCD is use for another function, the display will revert back to displaying system pressure after 30 minutes.The service panel is accessible only by Type 1 security. The included LiftInstituut AECO Certificate of Conformance recognizes this electronically pressure monitoring valve as "Remote Pressure Monitoring" in the certification documentation.

Pressure Switch 3.26.8
Code

3.26.8 Pressure Switch when cylinders are installed with the top of the cylinder above the top of the storage tank, a pressure switch shall be provided in the line between the cylinder and the valve, which shall be activated by the loss of positive pressure at the top of the cylinder. The switch shall prevent automatic door opening and the operation of the lowering valve or valves. The door(s) shall be permitted to open by operation of the in-car open button(s), when the car is within the unlocking zone.

Requested acceptance:

The pressure switch function is included with system pressure monitoring.
The MRL Hydro design is provided with an electronic pressure transducer (on the jack side of the check valve) with remote LCD display located at the 2nd landing service panel accessible from outside of hoistway.
The service panel is accessible only by Type 1 security. When system pressure drops below 45 psi, the pressure transducer signal is processed to stop the operation of the lowering solenoid. If system pressure is restored to above 60 psi, the system will resume normal operation. The included LiftInstituut AECO Certificate of Conformance recognizes this electronically assisted valve as "Electronic Low Pressure Detection" in the certification documentation.

This document contains confidential information proprietary to ThyssenKrupp Elevator Americas. It must not be reproduced or disclosed to others or used in any way in whole or in part except as authorized [in writing] by ThyssenKrupp Elevator Americas

Machine-room-less Hydraulic

MRL-Hydro

Endura MRL

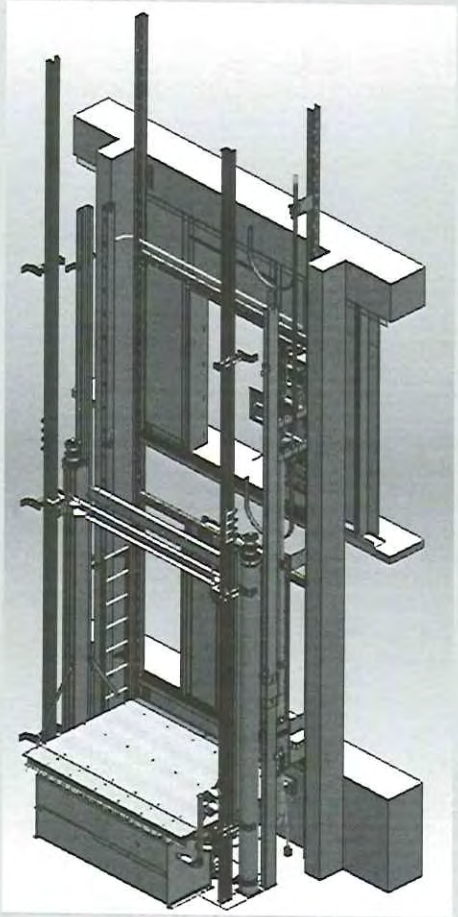

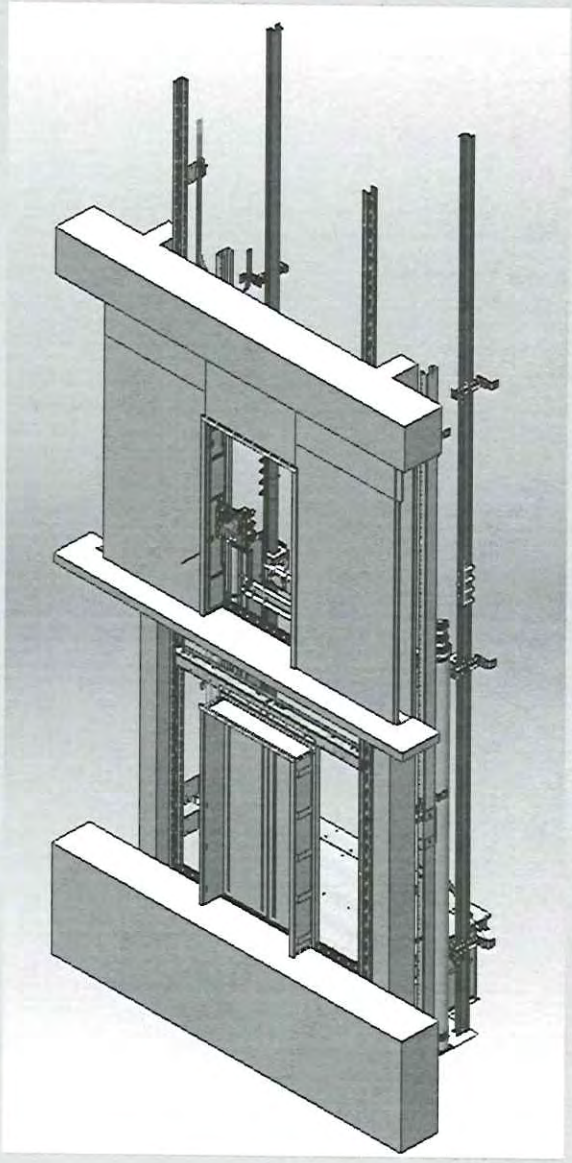

ThyssenKrupp Elevator Americas

ThyssenKrupp

Endura MRL

Controller Located at 2nd landing entrance jamb

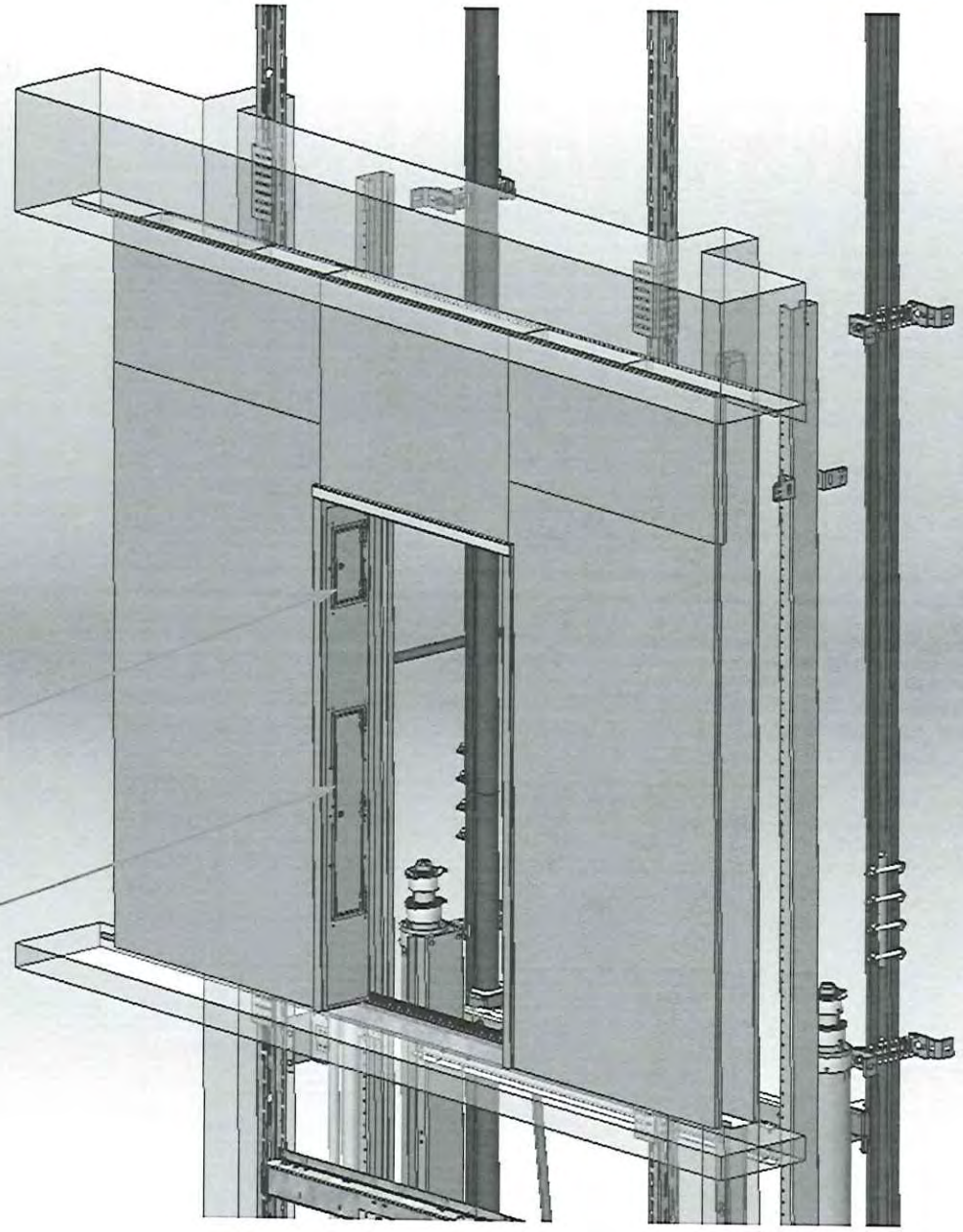

This document contains confidential information proprietary to ThyssenKrupp Elevator Americas. It must not be reproduced or disclosed to others or used in any way in whole or in part except as authorized [in writing] by ThyssenKrupp Elevator Americas.

Endura MRL

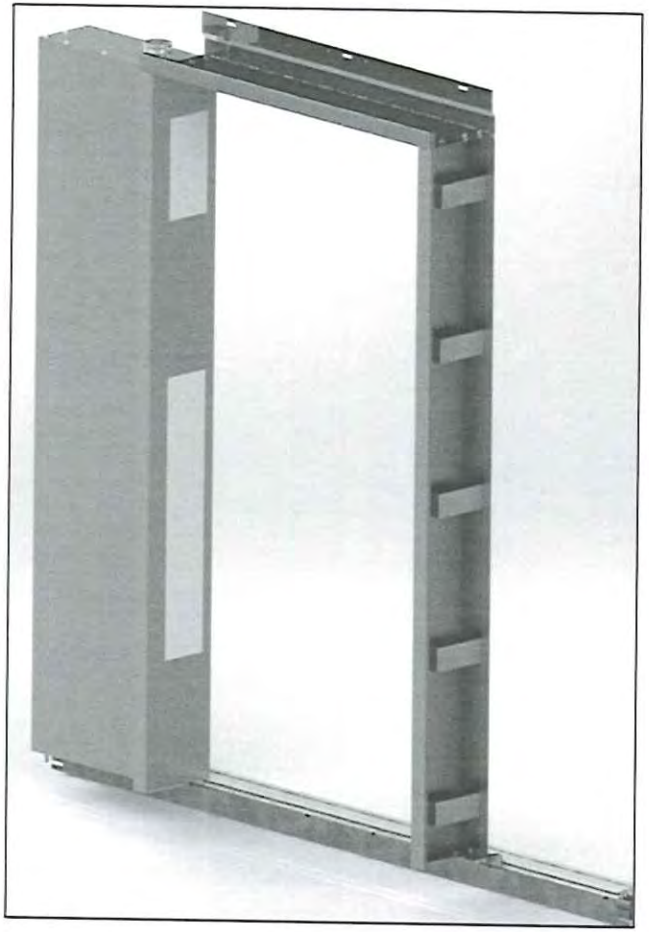

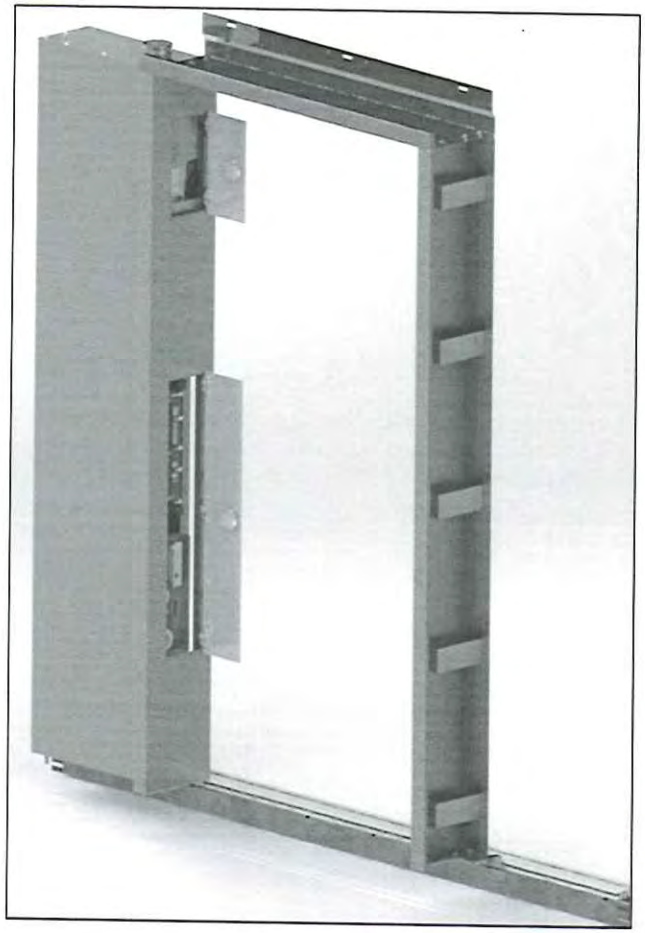

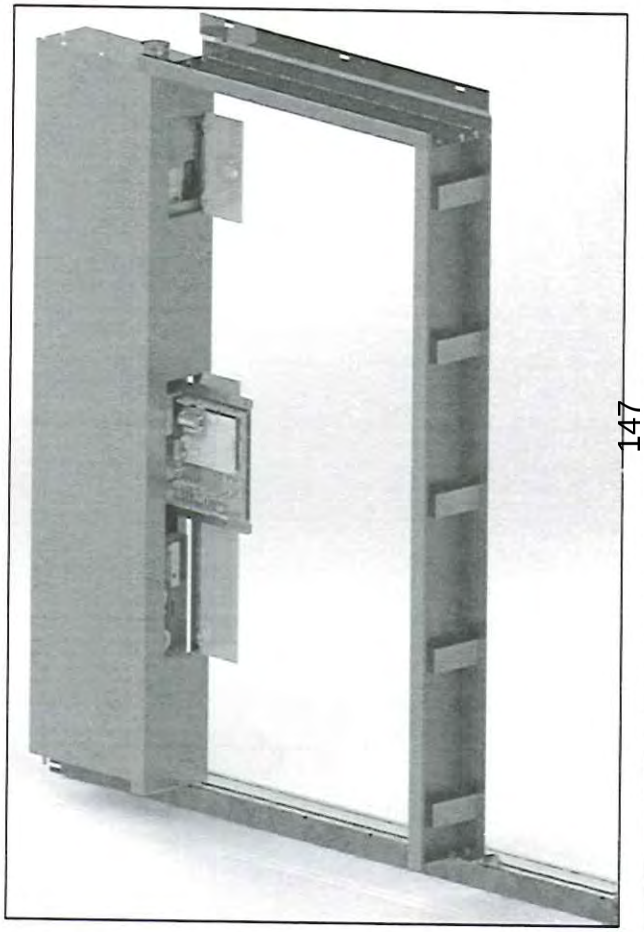

Controller housed in entrance frame jamb at 2nd landing (embedded in front wall of hoistway)

This document contains confidential information proprietary to ThyssenKrupp Elevator Americas. It must not be reproduced or disclosed to others or used in any way in whole or in part except as authorized [in writing] by ThyssenKrupp Elevator Americas.

Endura MRL

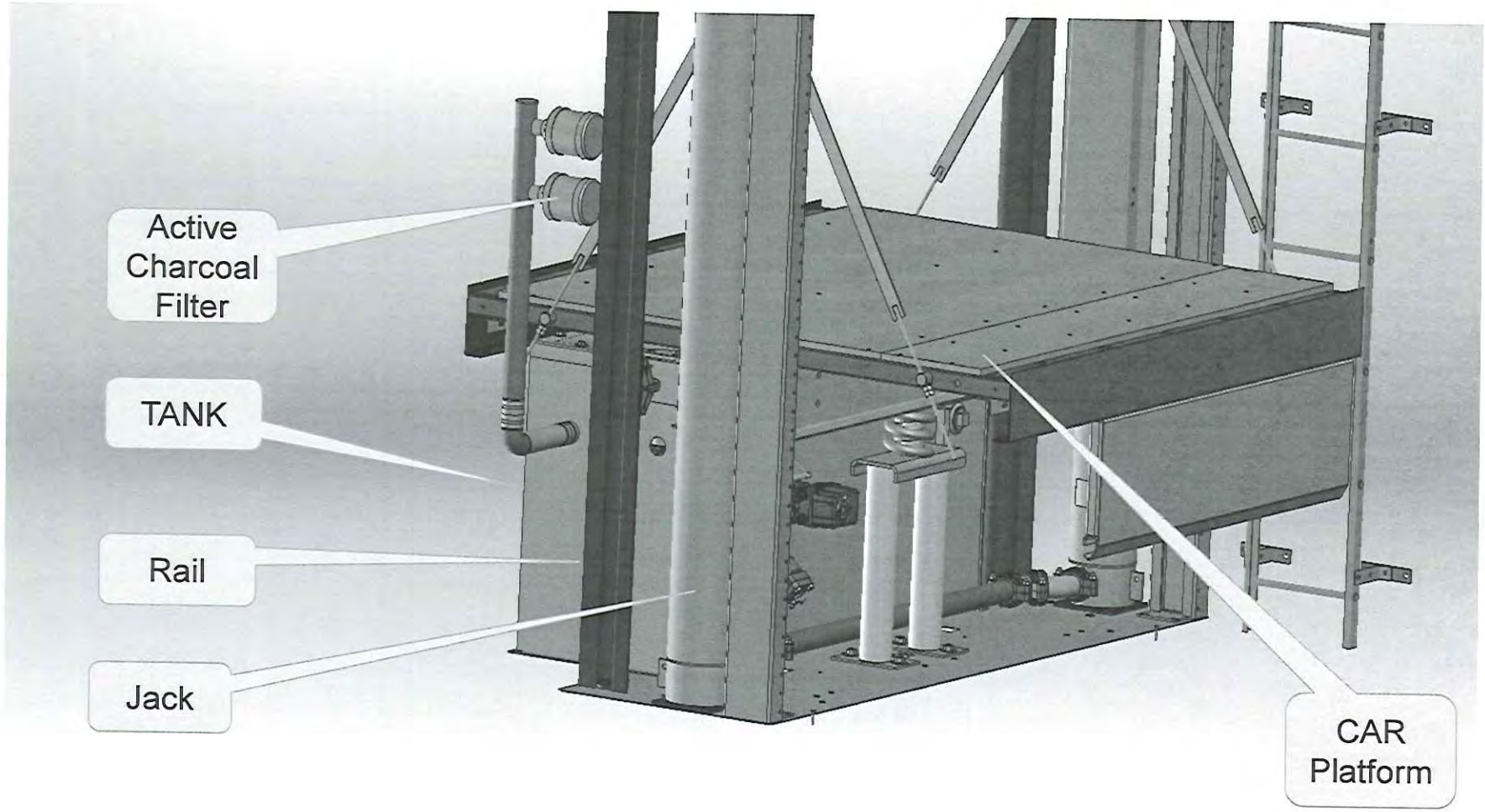

Power Unit under the car in pit – Sealed with carbon activated tank breathers

This document contains confidential information proprietary to ThyssenKrupp Elevator Americas. It must not be reproduced or disclosed to others or used in any way in whole or in part except as authorized [in writing] by ThyssenKrupp Elevator Americas.

Endura MRL

2 HOUR FIRE RATING FOR DRYWALL CONSTRUCTION

- 8" MINIMUM WALL SIZE AT THE SECOND FLOOR

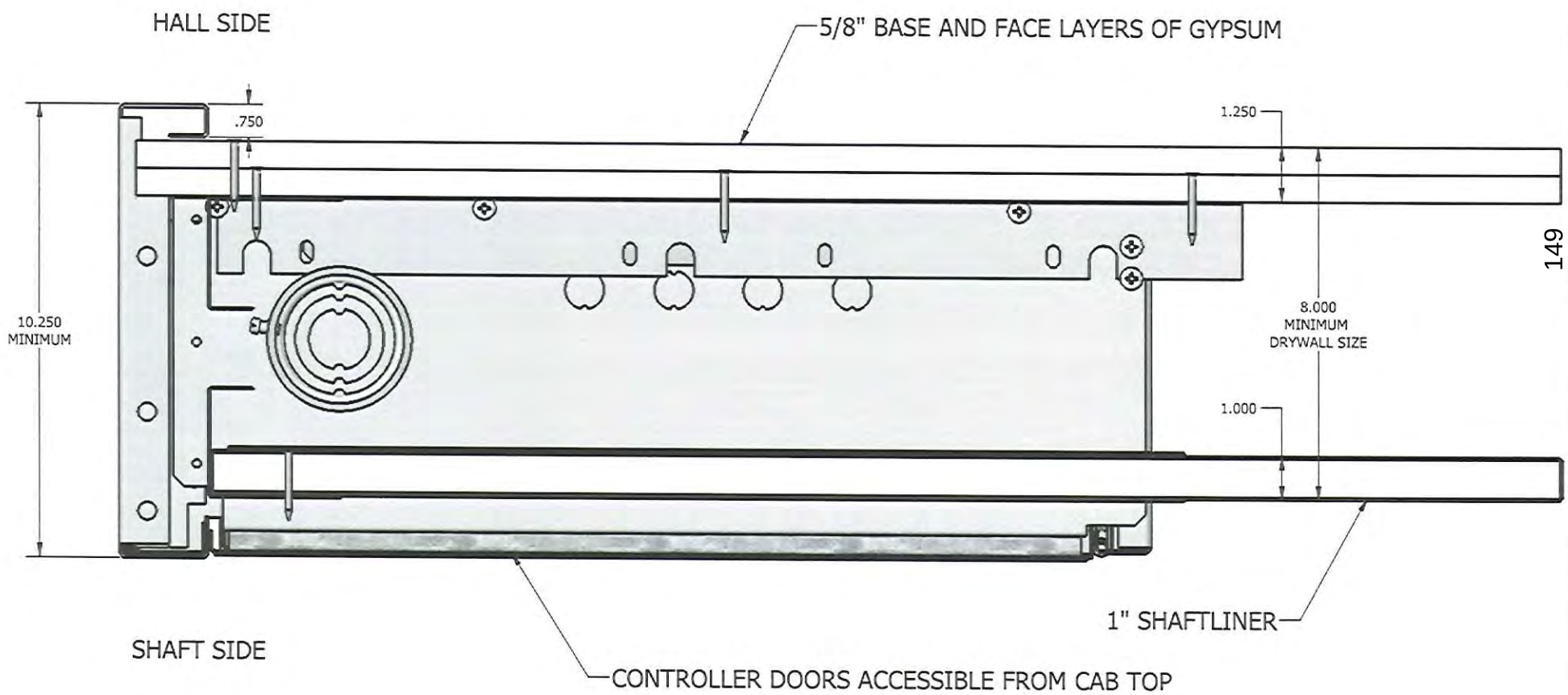

This document contains confidential information proprietary to ThyssenKrupp Elevator Americas. It must not be reproduced or disclosed to others or used in any way in whole or in part except as authorized [in writing] by ThyssenKrupp Elevator Americas.

Endura MRL

2 HOUR FIRE RATING FOR CMU CONSTRUCTION

- 8" MINIMUM MASONRY WALL SIZE INCLUDES 3/8" FINISH BY CONTRACTOR
- 1" SHAFTLINER FILLER BY CONTRACTOR

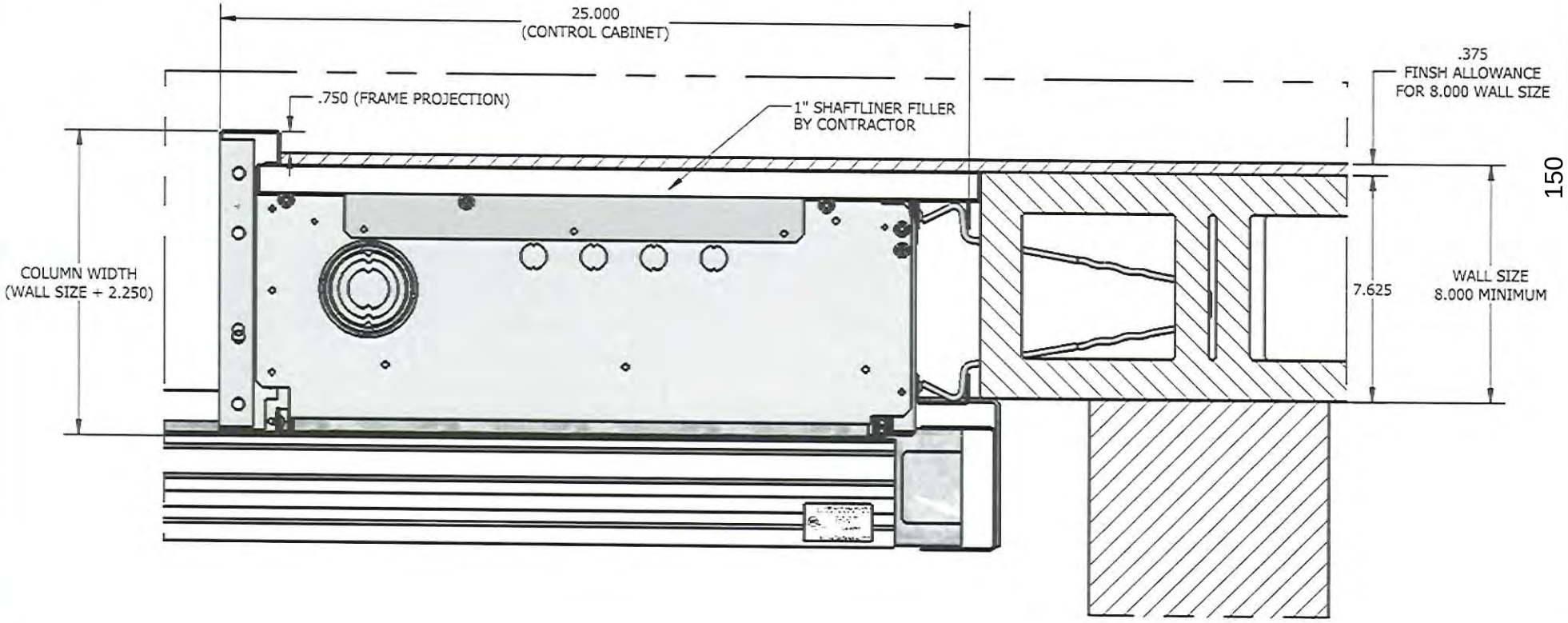

This document contains confidential information proprietary to ThyssenKrupp Elevator Americas. It must not be reproduced or disclosed to others or used in any way in whole or in part except as authorized [in writing] by ThyssenKrupp Elevator Americas.

Controller
Utilizes the proven TAC32 Hydro

ThyssenKrupp Elevator Americas

ThyssenKrupp

This document contains confidential information proprietary to ThyssenKrupp Elevator Americas. It must not be reproduced or disclosed to others or used in any way in whole or in part except as authorized [in writing] by ThyssenKrupp Elevator Americas.

Controller – Overview

- Size – 23" W x 8" D x 72" H
- Left & right hand versions required
- Physically divided into 3 sections, behind 2 doors
  - Trades terminals & vista – top door
  - Power Components – top door
  - Electronic Components – bottom door
- All field connections to rail terminals
- High voltage shield for power section
- Circuit breakers accessible behind entrance breaker door
- Electronics accessible behind entrance controller

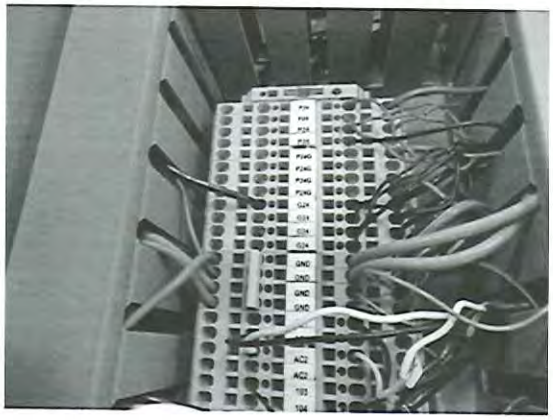

This document contains confidential information proprietary to ThyssenKrupp Elevator Americas. It must not be reproduced or disclosed to others or used in any way in whole or in part except as authorized [in writing] by ThyssenKrupp Elevator Americas.

Controller – Circuit Breakers – Branch Circuit Protection Panel

Cab Light Breaker (15 Amps)

- Accessible, lockable, replaceable from hall
- Electrical contractor wires from trades terminals

Main Line Breaker (15 – 400 Amps)

- Accessible, lockable, replaceable from hall
- Electrical contractor wires from hall

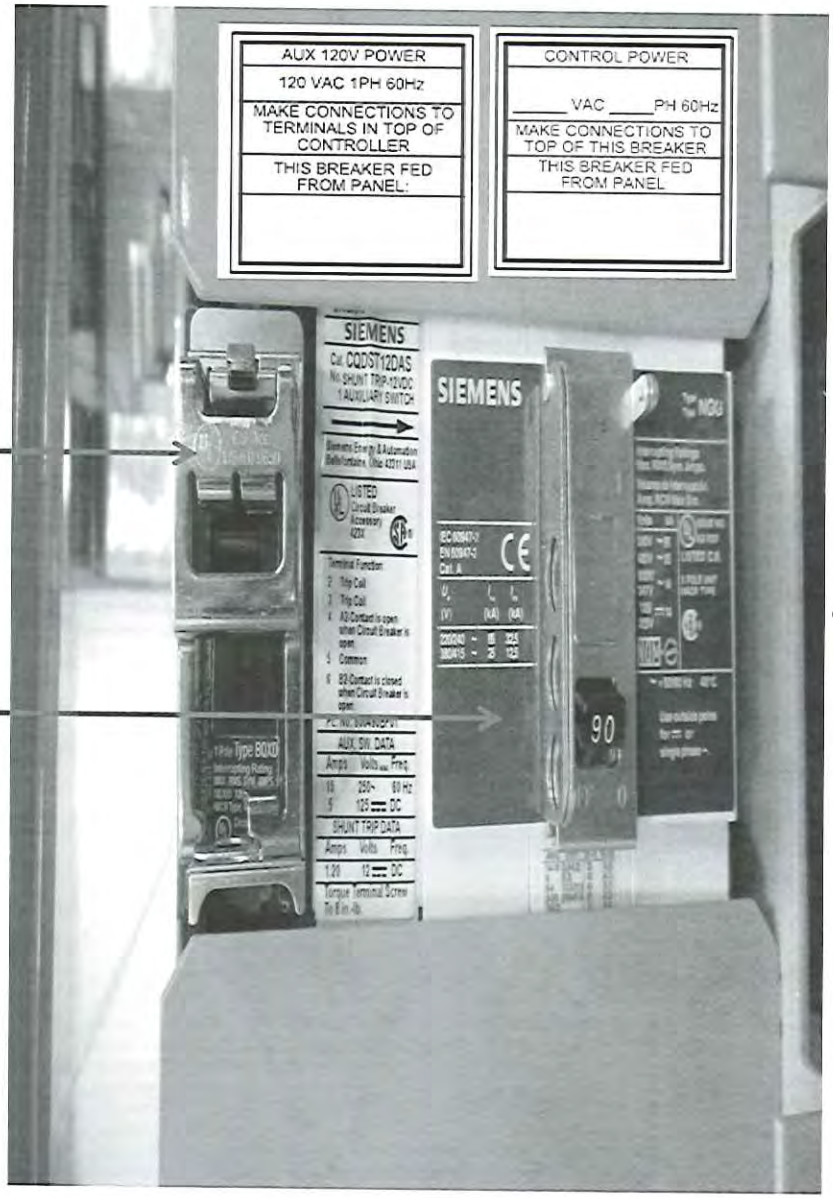

This document contains confidential information proprietary to ThyssenKrupp Elevator Americas. It must not be reproduced or disclosed to others or used in any way in whole or in part except as authorized [in writing] by ThyssenKrupp Elevator Americas.

Controller – Main Line Disconnect Switch

Main Line Disconnect Switch (15 – 400 Amps)

- Accessible, lockable, replaceable from hoistway
- Factory wired in series with breaker

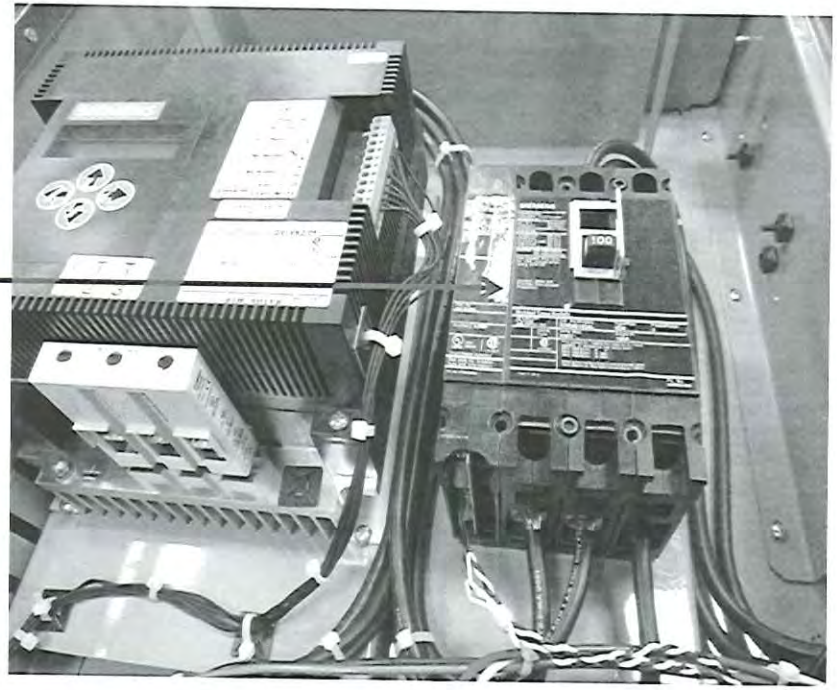

This document contains confidential information proprietary to ThyssenKrupp Elevator Americas. It must not be reproduced or disclosed to others or used in any way in whole or in part except as authorized [in writing] by ThyssenKrupp Elevator Americas.

Controller – Service Panel

- Delcon Control Board
- Main Controller Fuses
- Stop Switch
- APU/ML Key Switch
- Shutoff Valve Key Switch
- Shutoff Valve Status Indicators
- APU/ML Plug & Fuse
- APU/ML Power Cords
- Single Piece Label

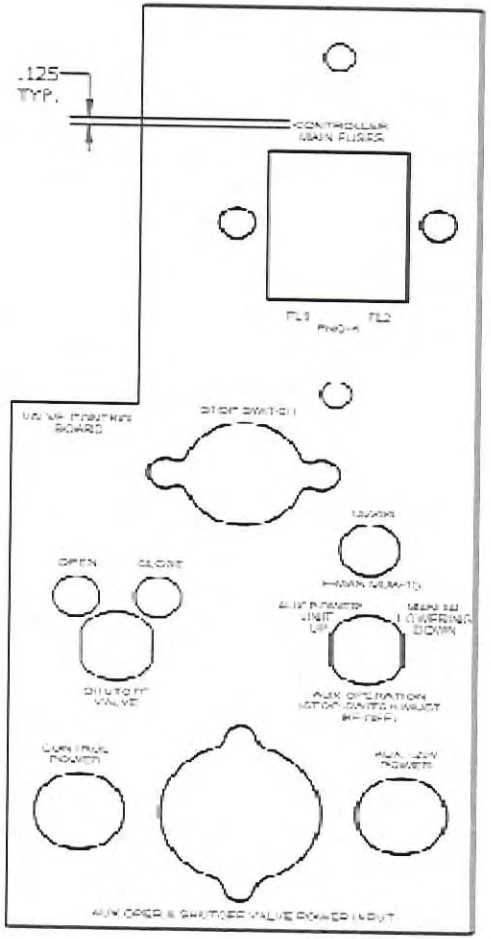

Label

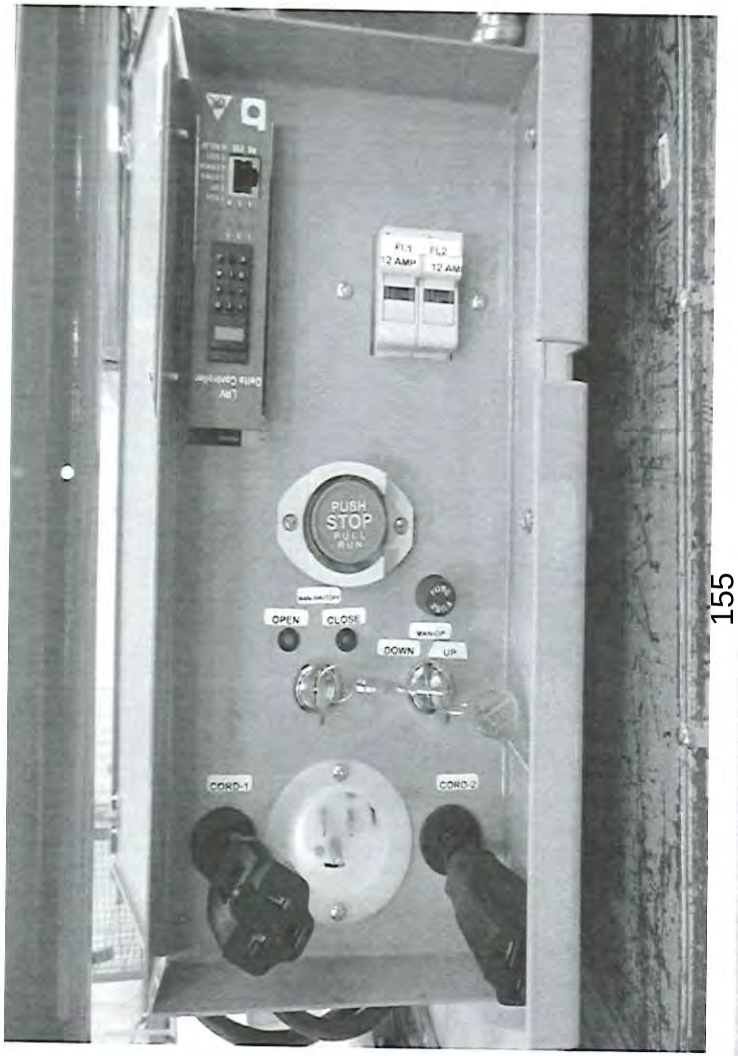

This document contains confidential information proprietary to ThyssenKrupp Elevator Americas. It must not be reproduced or disclosed to others or used in any way in whole or in part except as authorized [in writing] by ThyssenKrupp Elevator Americas.

Controller - Slide-out IOD Panel

- Utilizing the proven TAC32 H controller components
- Fully accessible IOD, CPU, UIT on pull-out slide panel
- Includes 24vdc power supplies on panel rear
- Provides access to:
  - Software download
  - Door bypass switches
  - Inspection switches
  - Door disable switch
  - Fuses
  - Diagnostic port

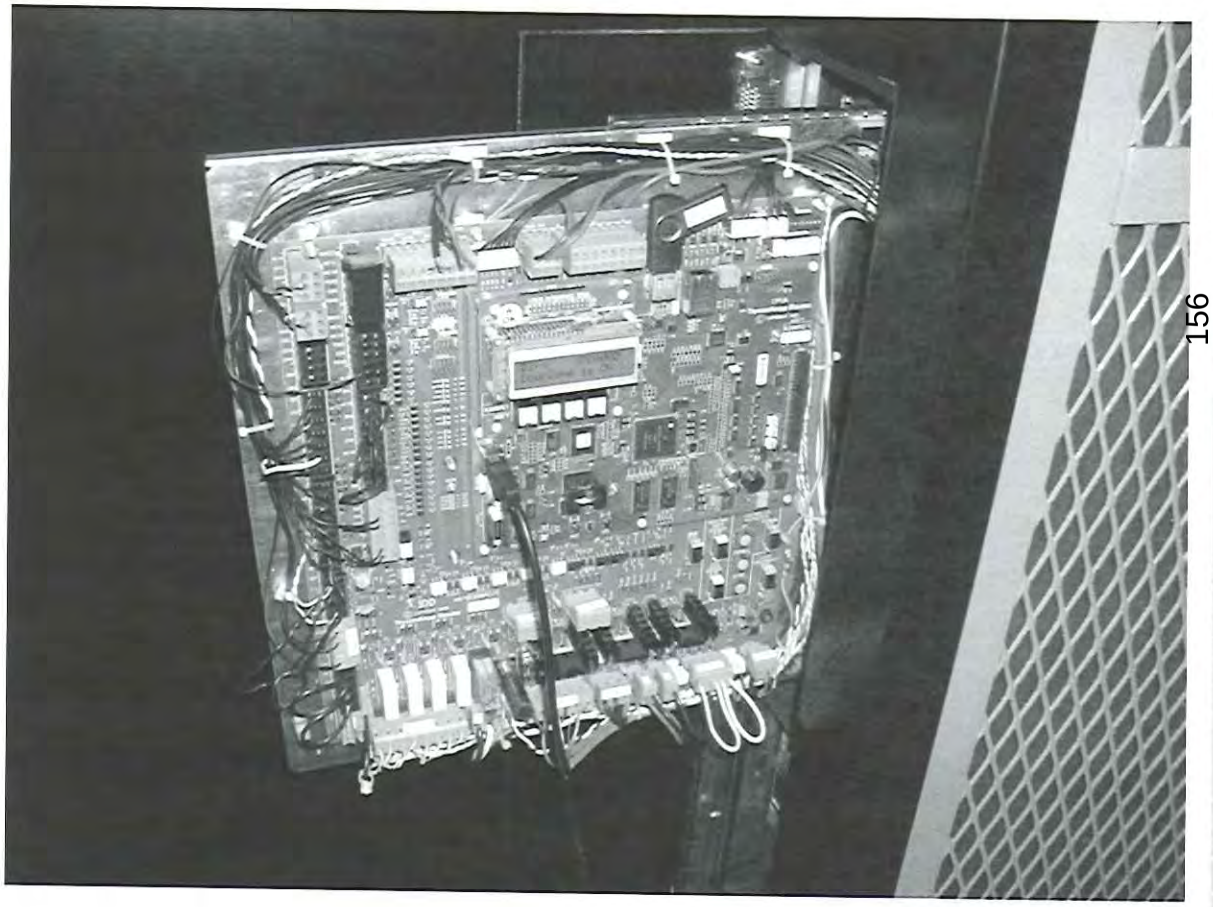

This document contains confidential information proprietary to ThyssenKrupp Elevator Americas. It must not be reproduced or disclosed to others or used in any way in whole or in part except as authorized [in writing] by ThyssenKrupp Elevator Americas.

Power Unit in the Pit

ThyssenKrupp Elevator Americas

ThyssenKrupp

This document contains confidential information proprietary to ThyssenKrupp Elevator Americas. It must not be reproduced or disclosed to others or used in any way in whole or in part except as authorized [in writing] by ThyssenKrupp Elevator Americas.

Features:

- Energy Reduction (30%)
  Viscosity control is not being offered on this product. The flow meter will compensate for the difference in flow due to viscosity changes in the fluid caused by temperature change. Viscosity control can be over 40% of a low use elevator's energy consumption. The E-valve will reduce energy during leveling. The E-valve will allow for a very short transition from deceleration to stop.

- Power unit is in the pit using Citgo NZ or Enviromax fluid.
- Corrosion resistant tank. The tank is thicker wall than schedule 40 pipe.
- Charcoal filtration on the tank to remove possible oil fumes and any odor.

- Travel - the travel with standard pit and overhead will be the same as current product offering.

This document contains confidential information proprietary to ThyssenKrupp Elevator Americas. It must not be reproduced or disclosed to others or used in any way in whole or in part except as authorized (in writing) by ThyssenKrupp Elevator Americas.

Features/Additional Items

•ASME A17.7 Items

- Electrically Actuated Shut-Off Valve
  Safe operation of the valve from outside of hoistway.
- Pressure Transducer
  Pressure readings from outside the hoistway with the User Interface Tool (UIT)
  Will also act in place of the low pressure switch.
- Electrically Assisted Manual Lowering

Auxiliary Pump Unit

Field request to access pit\power unit in event of a component failure.
This also provides the ability to install an elevator with just 115 VAC power.

- Hand of Power Unit
  The hand of the power unit can be changed in the field on most designs.
- Junction Box
  Provide Power Unit field connection.

This document contains confidential information proprietary to ThyssenKrupp Elevator Americas. It must not be reproduced or disclosed to others or used in any way in whole or in part except as authorized (in writing) by ThyssenKrupp Elevator Americas.

Pit View from Top with Platform removed

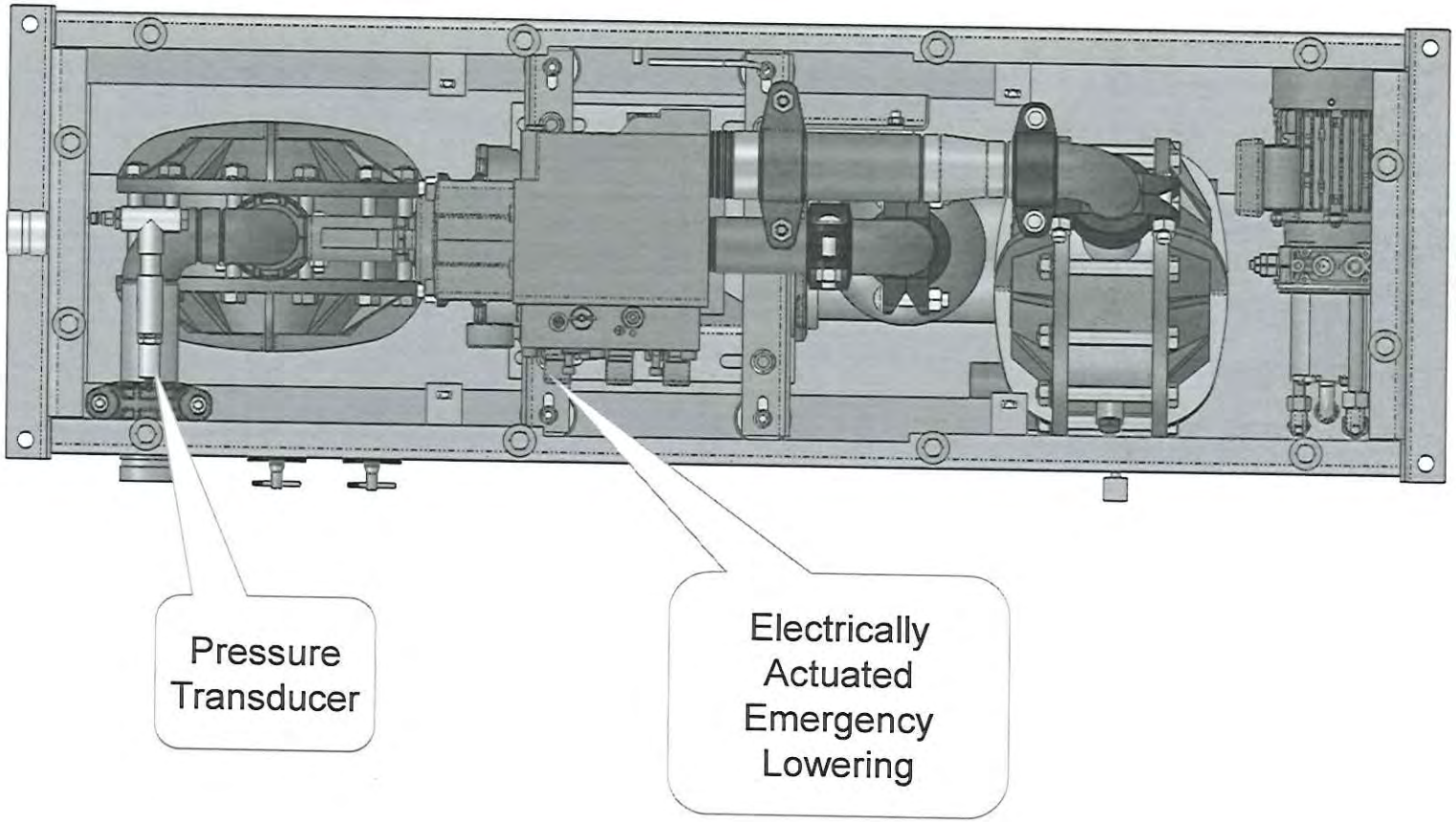

This document contains confidential information proprietary to ThyssenKrupp Elevator Americas. It must not be reproduced or disclosed to others or used in any way in whole or in part except as authorized [in writing] by ThyssenKrupp Elevator Americas.

Power Unit View with Tank Bottom Removed

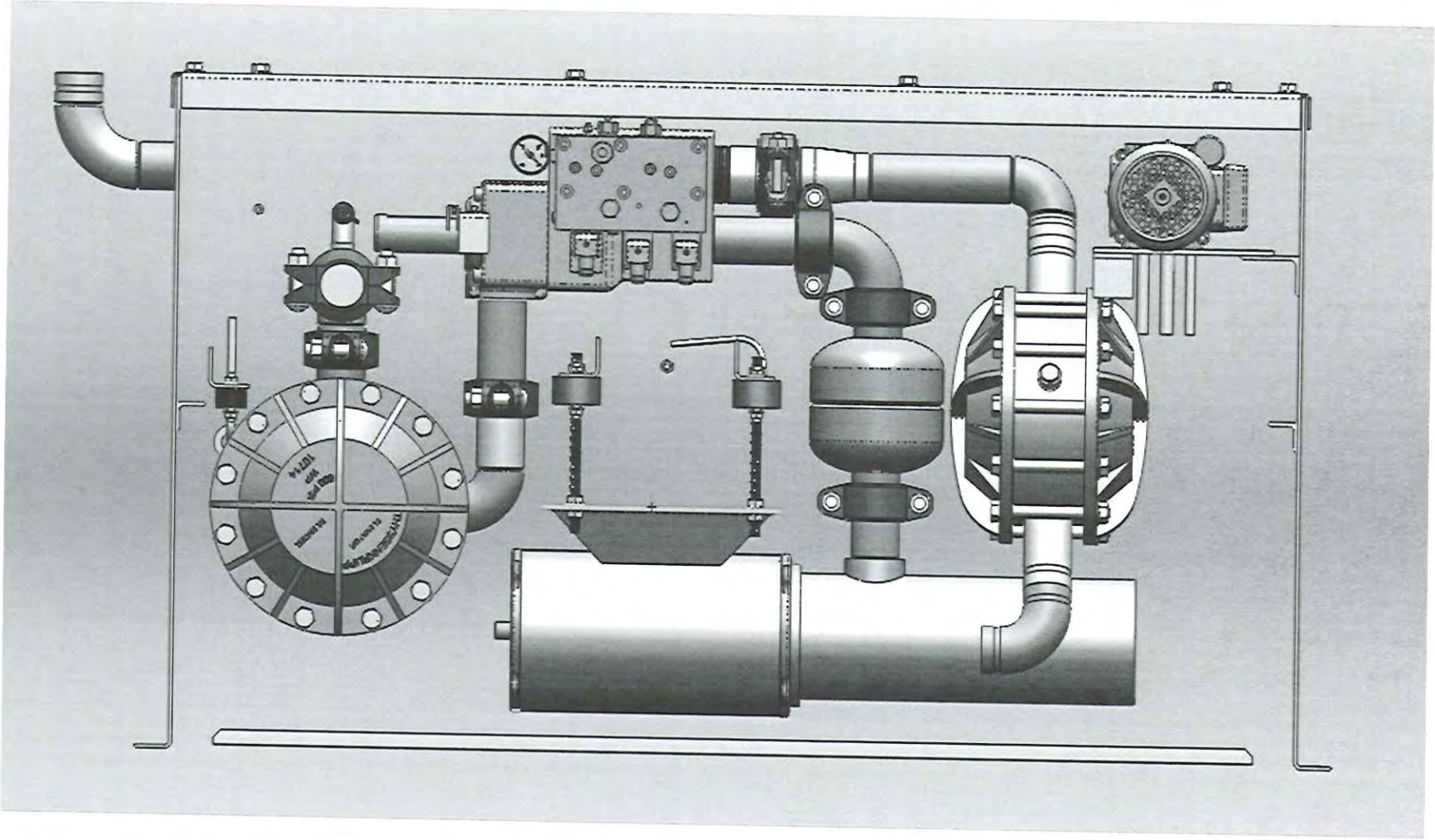

This document contains confidential information proprietary to ThyssenKrupp Elevator Americas. It must not be reproduced or disclosed to others or used in any way in whole or in part except as authorized [in writing] by ThyssenKrupp Elevator Americas.

Pit View from Front of Pit

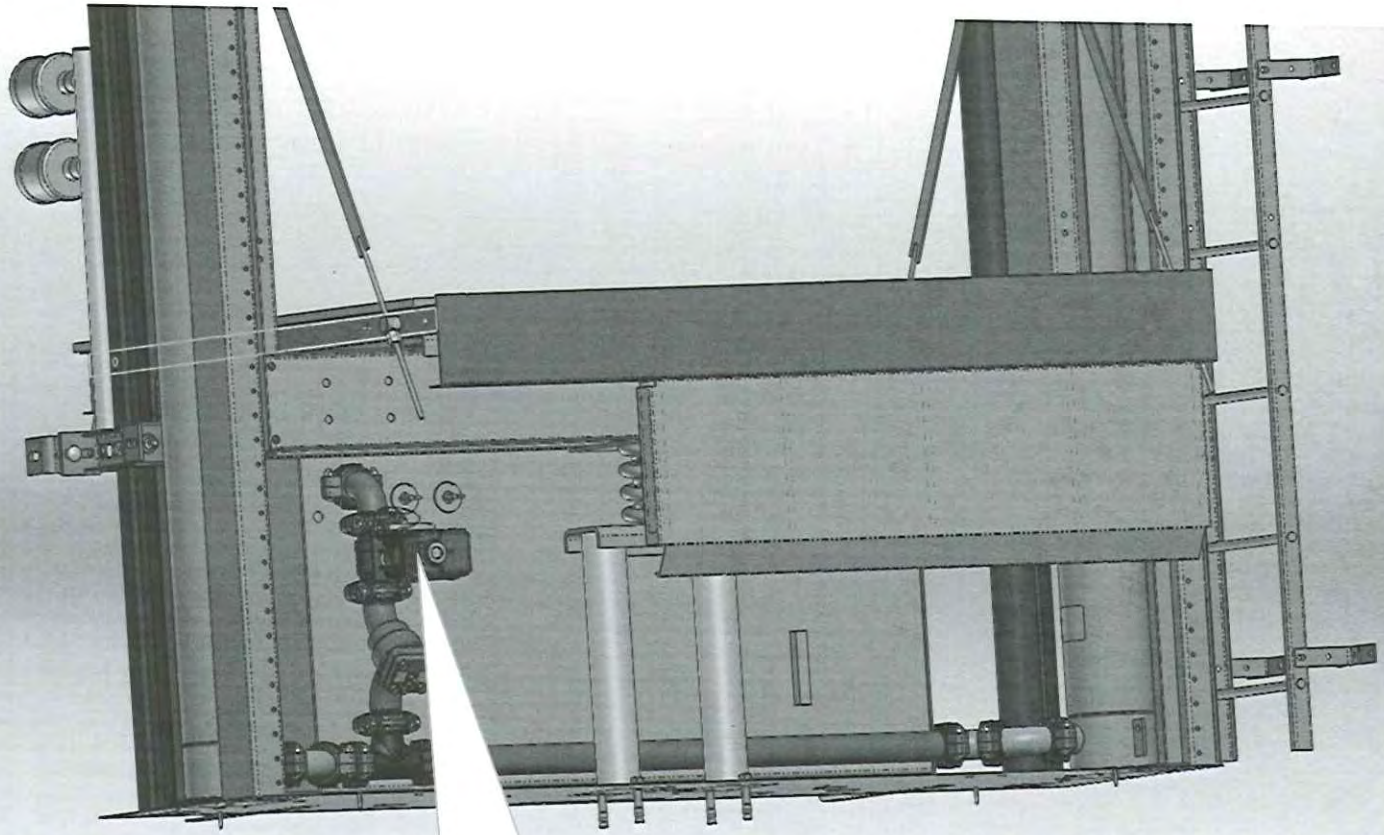

•Electrically Actuated Shut-Off Valve

This document contains confidential information proprietary to ThyssenKrupp Elevator Americas. It must not be reproduced or disclosed to others or used in any way in whole or in part except as authorized [in writing] by ThyssenKrupp Elevator Americas.

Power Unit, Junction Box, Shut off Valve, Water Sensor and Filter

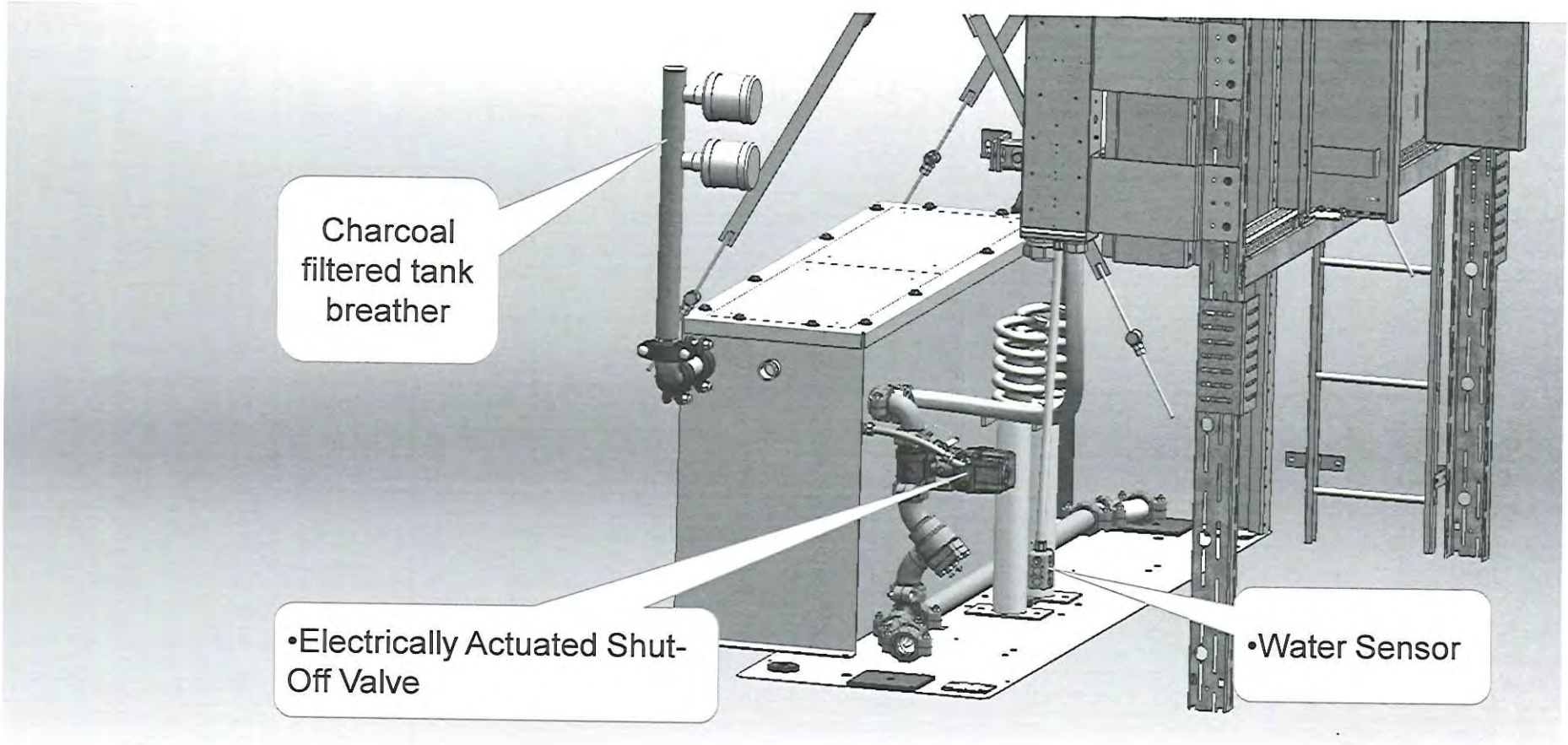

This document contains confidential information proprietary to ThyssenKrupp Elevator Americas. It must not be reproduced or disclosed to others or used in any way in whole or in part except as authorized [in writing] by ThyssenKrupp Elevator Americas.

Entire Hoistway

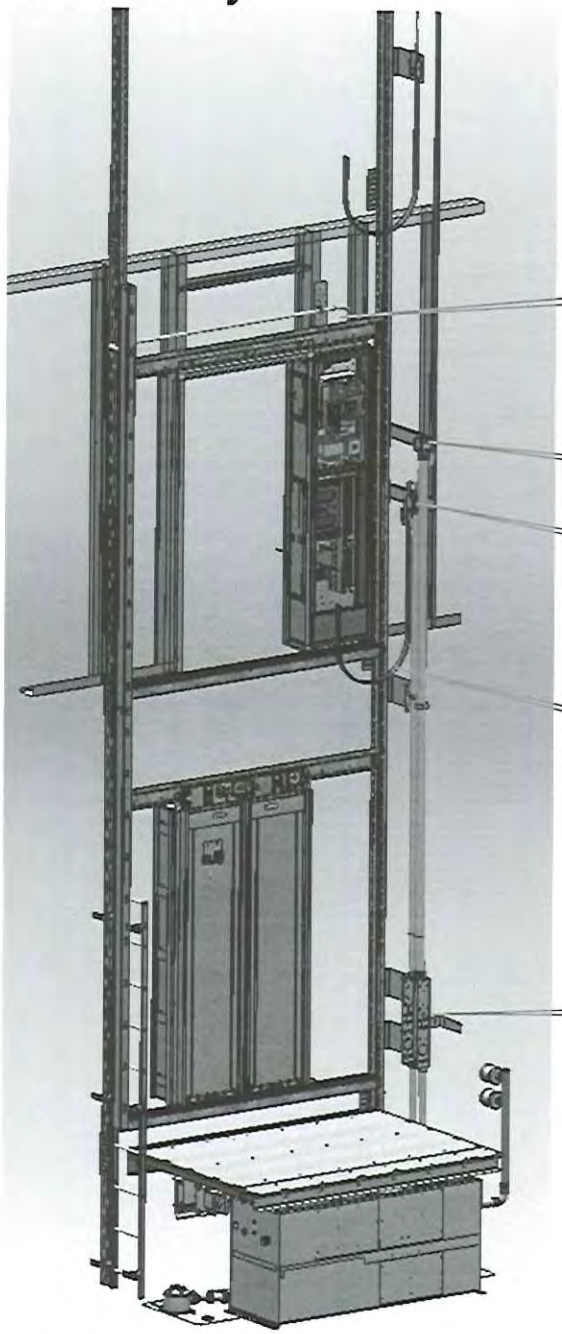

HOISTWAY WIRING

POWER UNIT WIREWAY

POWER UNIT WIREWAY

TRAVELING CABLE

JUNCTION BOX

This document contains confidential information proprietary to ThyssenKrupp Elevator Americas. It must not be reproduced or disclosed to others or used in any way in whole or in part except as authorized [in writing] by ThyssenKrupp Elevator Americas.