RICK SNYDER
GOVERNOR

STATE OF MICHIGAN
DEPARTMENT OF LICENSING AND REGULATORY AFFAIRS
BUREAU OF CONSTRUCTION CODES
IRVIN J. POKE
DIRECTOR

STEVEN H. HILFINGER
DIRECTOR

STATE PLUMBING BOARD
BUREAU OF CONSTRUCTION CODES

Conference Room No. 3
2501 Woodlake Circle
Okemos, Michigan 48864

AGENDA
February 28, 2012
10:00 a.m. Eastern Standard Time

1. Call to Order and Determination of Quorum — D. Jones

2. Approval of Agenda – February 28, 2012 (Pages 1 – 2)

3. Election of Officers
   Approval of Minutes – December 13, 2011 (Pages 3 – 8)
   Approval of Examination Minutes – December 14, 2011 and December 21, 2011 (Pages 9 – 10)

4. Approval of Examination Results (Pages 11-13)
   Journey Plumber Examination Results – December 14, 2011
   Master Plumber Examination Results – December 14, 2011
   Plumbing Contractor Examination Results – December 21, 2011

5. Applicants Appearing Before the Board (Pages 14-37)
   A. Baker, Jeffrey — Master Plumber Applicant
   B. Spicer, Andrew — Master Plumber Applicant
   C. Spicer, Gregory — Master Plumber Applicant
   D. Dendinger, Greg — Journey Plumber Applicant
   E. Moyer, Anthony — Journey Plumber Applicant

6. Good Moral Character Appeals
   A. Ritchey, Patrick — Apprentice Registration Applicant

7. Construction Code Appeals Request (Pages 38-55) — R. Konyndyk
   A. URS, Corp., Greenville Public Schools High School Stadium, CCC-PLBG-12-003

The meeting site and parking is accessible. Individuals attending the meeting are requested to refrain from using heavily scented personal care products, in order to enhance accessibility for everyone. People with disabilities requiring additional services in order to participate in the meeting should call the Plumbing Division at (517) 241-9330 at least 10 work days before the event. LARA is an equal opportunity employer/program.

Providing for Michigan's Safety in the Built Environment

B. MDOT, Brighton Garage, William Hoop, CCC-PLBD-12-004

8. New Products (Page 56-91) R. Konyndyk
   A. Highland Tank Elevator Sump Pump Filter Systems, HT-M7 Filter Unity with pump and control system, BCCP-11-001
   B. Highland Tank Protected Steel, Grease Interceptors Models G-75 and G-250 Great Basin Grease Interceptor Series, BCCP-12-002
   C. Trap Guard Device, ProSet Systems, Inc., BCCP-12-003

9. Chief's Report R. Konyndyk
   A. State 2012 Proposed Rules Process
   B. ICC 2015 Code Committee Process

10. Legislative Update R. Konyndyk

11. Unfinished Business

12. New Business

13. Public Comment

14. Next Meeting – June 5, 2012

15. Adjournment

RICK SNYDER
GOVERNOR

STATE OF MICHIGAN
DEPARTMENT OF LICENSING AND REGULATORY AFFAIRS
BUREAU OF CONSTRUCTION CODES
IRVIN J. POKE
DIRECTOR

STEVEN H. HILFINGER
DIRECTOR

STATE PLUMBING BOARD
BUREAU OF CONSTRUCTION CODES
Conference Room No. 1
2501 Woodlake Circle
Okemos, Michigan 48864

MINUTES
December 13, 2011
10:00 a.m. Eastern Standard Time

MEMBERS PRESENT
Mr. Duane Branch, Chairperson
Mr. Steve Busch
Mr. David Jones
Mr. Walter Maner
Mr. Curt McNitt
Mr. Daniel Nixon

MEMBERS ABSENT
Mr. Brock Howard

DEPARTMENT OF LICENSING & REGULATORY AFFAIRS PERSONNEL ATTENDING
Mr. Robert Konyndyk, Chief, Plumbing Division
Mr. Keith Lambert, Deputy Director
Mr. Andy Neuman Jr., Assistant Chief, Plumbing Division
Mr. Joe Madziar, Senior Plumbing Inspector

OTHERS IN ATTENDANCE
Mr. Tim Casai, TMP Architecture
Mr. Dean Bergeman, MPA
Mr. Barry Pines, Code Study and Development South Eastern Michigan
Mr. James Hagman, Master Applicant
Mr. Henry Spisz, Master Applicant
Mr. Jason Brenner, Master Applicant
Mr. Timothy Jackman, Master Applicant
Mr. Gary VanDen Berg, Triangle Tube
Mr. Emmett Kelly, Lansing Plumbing Board
Mr. Jeff Theisen, WEDI

Mr. Bart Rosen, DCD
Mr. Scott Stanley, DCD
Mr. Slean Cleary, IAPMO/ASSE
Mr. Michael Melaragni, PITC/ Local #98
Ms. Cindy Maher, MPMCA
Mr. Corey Roblee, ICC

1. **CALL TO ORDER AND DETERMINATION OF QUORUM**

Chairperson Branch called the meeting to order at 10:00 a.m. A quorum was present at that time.

2. **APPROVAL OF AGENDA**

A **MOTION** was made by Board Member Jones and supported by Board Member Busch to approve the agenda for the December 13, 2011 State Plumbing Board meeting. **MOTION CARRIED.**

3. **APPROVAL OF MINUTES**

A **MOTION** was made by Board Member Jones and supported by Board Member Nixon to approve the board minutes from the September 20, 2011 meeting. **MOTION CARRIED.**

4. **APPROVAL OF EXAMINATION MINUTES AND RESULTS**

A **MOTION** was made by Board Member Nixon and supported by Board Member Maner to approve the examination minutes and results of the Plumbing Contractor Examination held on September 7, 2011 and the Journey Plumber, Master Plumber Examination held on September 21, 2011. **MOTION CARRIED.**

5. **APPLICANTS APPEARING BEFORE THE BOARD**

Mr. Jeffrey Baker, Master Applicant did not appear before the board as scheduled.

Mr. James F. Hagman, Master Applicant appeared before the board requesting permission to take the Master Plumber Examination. Mr. Hagman provided documentation verifying his out-of-state license. The board discussed the differences of his out of state experience and licensing requirements with the State of Michigan requirements.

After a discussion with Mr. Hagman regarding his qualifications for the plumbing examination, a **MOTION** was made by Board Member Jones and supported by Board

Member Nixon to allow Mr. Hagman to take the Journey Plumber Examination. **MOTION CARRIED**.

Mr. Jason J. Brenner, Master Applicant, appeared before the board requesting permission to take the Master Plumber Examination. Mr. Brenner provided documentation verifying his out-of-state license was obtained through substantially the same requirements as the State of Michigan.

After a discussion with Mr. Brenner regarding his qualifications to take the Master Plumber Examination, a **MOTION** was made by Board Member Jones and supported by Board Member Busch to allow Mr. Brenner to take the Master Plumber Examination. **MOTION CARRIED**.

Mr. Timothy M. Jackman, Master Applicant, appeared before the board requesting permission to take the Master Plumber Examination. Mr. Jackman provided documentation verifying his out-of-state license. The board discussed the differences of his out of state experience and licensing requirements with the State of Michigan requirements.

After a discussion with Mr. Jackman regarding his qualifications for the plumbing examination, a **MOTION** was made by Board Member Jones and supported by Board Member Busch to allow Mr. Jackman to take the Journey Plumber Examination. **MOTION CARRIED**.

6. GOOD MORAL CHARACTER APPEALS

Mr. Henry S. Spisz, Master Applicant requested to appear before the board following a Notice of Denial for Master Plumber Reexamination. Mr. Spisz has a valid journey plumber's license.

Following a review and discussion with Mr. Spisz concerning his history, a **MOTION** was made by Board Member Jones and supported by Board Member Maner to approve Mr. Spisz to re-apply and take the Master Plumber Examination. **MOTION CARRIED.**

7. CONSTRUCTION CODE APPEALS REQUEST

TMP Architecture, Inc., Detroit Country Day School, CCC-PLBG-11-012

Mr. Timothy Casai, TMP Architecture, Inc. presented the board an appeal request from the requirements of Section 403.1, of the Michigan Plumbing Code for Detroit Country Day School.

Following a review and discussion, a **MOTION** was made by Board Member Busch and supported by Board Member Nixon to approve the appeal request for Detroit Country Day School to use proposed and existing plumbing fixtures to meet the number of

required plumbing fixtures for the proposed gym addition. The motion contained the following conditions: A letter signed by the school authorities stating the alternate restrooms will be available for all events, the gymnasium will not be used simultaneously along with school operations, and signs shall be posted to direct attendees to the various restrooms. The signs shall be verified to the chief by photographs. Further, a letter following a year of operation shall be provided providing an operational update. **MOTION CARRIED.**

MPA Architects, Lakeland Niles Medical Office Building, CCC-PLBD-12-002

Mr. Dean Bergman, MPA Architects presented the board an appeal request from the requirements of Section 410.1, of the Michigan Plumbing Code for Lakeland Niles Medical Office Building.

Following a review and discussion, a **MOTION** was made by Board Member Jones and supported by Board Member McNitt to approve the appeal request for Lakeland Niles Medical Office Building to use Water Guardian PW1R unit water coolers other than those meeting the requirements of Section 410.1. The units shall be provided with a cold water supply and drain connection. The motion contained the following conditions: The units shall conform to NSF 61 and shall meet the ADA requirements as verified by the building official. **MOTION CARRIED.**

8. NEW PRODUCTS

Wedi Fundo/Riolito Shower System, BCCP-11-008

Mr. Jeff Theisen, WEDI provided product details to the board for Wedi Fundo/Riolito Shower System.

A **MOTION** was made by Board Member Jones and supported by Board Member Busch to remove the product table action form the September 20, 2011 board meeting. The tabling motion was made in order to obtain information related to the products drain construction from the manufacture or their representatives. **MOTION CARRIED.**

Following a detailed presentation and discussion a **MOTION** was made by Board Member Jones and supported by Board Member Nixon to forward the Wedi Shower System base and side wall assembly with the Fundo, round conventional drain to the Construction Code Commission for approval. **MOTION CARRIED.**

Hydroflo Systems Waterproofing Sub Soil Drain System, BCCP-12-001

Mr. Konyndyk provided the board with an overview of the Bureau's recent correspondence requesting additional product information and involvement with conditions required by the bureau's Building Division. Additional action at this time is unnecessary.

Triangle Tube Challenger Combination Boiler and/or Water Heater Models CC85, CC105, and CC125, BCCP-11-009

Mr. Konyndyk provided the board with an overview of the Bureau's recent involvement and position related to the products review. Triangle Tube was notified by correspondence October 4, 2011 that the requested conformance test reports shall be on file in this office. Those reports or comments have not been received to date.

9. CHIEF'S REPORT

Mr. Konyndyk provided information on the following issues:

Information was provided on the 2012 rules committee scheduling and what documents with accompanying material will be provided to assist them in their efforts.

The board was informed on the status of the International Code Councils (ICC) 2015 Code Update Committee Process. Code change proposals are due before January 3, 2012.

The board was updated on recent product listing actions taken by ICC in their ES-PMG approvals.

10. LEGISLATIVE UPDATE

None

11. UNFINISHED BUSINESS

None

12. NEW BUSINESS

Duane Branch, the Plumbing Board Chair provided details regarding his future leader ship intentions. Future meeting attendance was also discussed.

Sean Cleary, IAPMO Field Representative and ASSE Backflow Training Program provider provided a detailed report of ASSE Backflow Training programs and detail on state programs throughout the country. He provided numerous handouts. He received a great deal of expressed appreciation for his and Local 98's week long training program recently provided to upgrade the state recognized Backflow Prevention Program.
Mr. Konyndyk distributed hard copy product approval and appeal documents to the board for future meetings. The division has provided documents for later meetings in advance to reduce distribution costs.

Board member Jones expressed concern with statute requirements for registered apprentices not having three years of experience within the 2002 PA 733, Section 27 (2) five year examination limit. Chief Konyndyk explained that Section 27 (3) provides the ability to grant an extension in documented cases. Examples of those actions were provided.

13. PUBLIC COMMENT

Mr. Michael Melaragni, Plumbing Industry Training Center / Local #98 outlined their recent training program for program instructors and examination proctors. Chief Konyndyk expressed the bureaus appreciation for their professionalism in conducting the program.

Mr. Gary VanDen Berg representing Triangle Tube expressed his frustration with the bureau decision to require published test reports for the products Certificate of Acceptance action.

Mr. Corey M. Roblee, ICC introduced himself.

Mr. Barry Pines expressed his concern and displeasure with the product acceptance of Sure Seal devices.

Ms. Cindy Maher, MPMCA Director, provided detail related to the changes for the state recognized Backflow Training programs. Ms. Maher also provided detail on the status of House Bill 4561 the implementation of three year and six year cycle changes for commercial and residential codes.

14. NEXT MEETING

February 28, 2012

15. ADJOURNMENT

Chairperson Branch requested the names of board members attending the next days examinations.

A **MOTION** was made by Board Member Busch and supported by Board Member Jones to adjourn the meeting at 1:00 p.m. Eastern Standard Time. **MOTION CARRIED.**

Approved: _____ Date: _____

RICK SNYDER
GOVERNOR

STATE OF MICHIGAN
DEPARTMENT OF LICENSING AND REGULATORY AFFAIRS
BUREAU OF CONSTRUCTION CODES
IRVIN J. POKE
DIRECTOR

STEVEN H. HILFINGER
DIRECTOR

STATE PLUMBING BOARD
BUREAU OF CONSTRUCTION CODES
Michigan State University
Agriculture and Livestock Education Pavilion
East Lansing, Michigan 48823

EXAMINATIONS HELD
December 14, 2011 and December 21, 2011
8:00 a.m. and 9:00 a.m.

MEMBERS PRESENT
Mr. Duane Branch, Chairperson
Mr. David Jones
Mr. Walter Maner
Mr. Curt McNitt
Mr. Daniel Nixon
Mr. Steve Busch

MEMBERS ABSENT
Mr. Brock Howard

DEPARTMENT OF LICENSING & REGULATORY AFFAIRS PERSONNEL ATTENDING
Mr. Andy B. Neuman Jr., Plumbing Division
Mr. Joe Madziar, State Plumbing Inspector
Ms. Phyllis Center, State Plumbing Inspector
Mr. Mike Field, State Plumbing Inspector
Mr. Bob Page, State Plumbing Inspector

Chairperson Branch introduced the Plumbing Board members. Mr. Andy Neuman provided instructions to the candidates.

Forty two master applicants had been approved for the examination; 36 applicants took the examination.

Ninety five journey applicants had been approved for the examination; 83 applicants took the examination.

The Assistant Chief of the Plumbing Division and four State Plumbing Inspectors assisted the State Plumbing Board with the examination.

Twenty seven plumbing contractor applicants had been approved for the examination; 23 applicants took the examination.

The Chief of the Plumbing Division and two proctors assisted with the contractors examination.

Approved: _____ Date: _____

Duane Branch, Chairperson

DRAFT

Journey Plumber's Passed List
December 14, 2011

Journey Plumber	Address
BENN, CHRISTIAN J	LANSING MI
CLINE, GUY M	DEARBORN HEIGHTS MI
DUQUETTE, DONALD D	MARQUETTE MI
GUNTHORPE, NATHAN J	EAST LANSING MI
LAMKE, MARK D	LANSING MI
LUBITZ, JOHN M	COMMERCE TWP MI
MESSICK, WILLIAM L	WHITE LAKE MI
PATRICK, JASON R	STOCKBRIDGE MI
RAINS, JAMES T	YPSILANTI MI
RIES, JOHN J	UTICA MI
ROELENS, RYAN L	KIMBALL MI
RUSS, ROBERT L	LEVERING MI
SHEPHERD, DALE P	BARODA MI
TYLER, CHRISTOPHER J	GRASS LAKE MI
WARREN, PATRICK L	MAPLE RAPIDS MI
WHITAKER, WAYLON	STOCKBRIDGE MI

Master Plumber's Passed List
December 14, 2011

Master Plumber	Address
BELLVILLE, LARRY A	HOWELL MI
BRENNER, JASON J	MALONE WI
FIELDER, ANDREW	LAMBERTVILLE MI
HANNON, TIMOTHY R	WYOMING MI
LANGELAND, THOMAS D	MARNE MI
LEFAIVE, TROY W	JACKSON MI
LIEDEL, LUCAS M	HOWELL MI
MEHILLI, LORENC	LIVONIA MI
PAUL, ROBERT C	BROWN CITY MI
POEL, MARC A	VICKSBURG MI
RODRIGUEZ, ENRIQUE H	DETROIT MI
SILVA, ERIC M	WALLED LAKE MI
STREB, JERROLD T	EDWARDSBURG MI

Plumbing Contractor's Passed List

December 21, 2011

Plumbing Contractor	Address
BUNTING, GARRET R	CLIO MI
COOPER, DANIEL E	COMSTOCK PARK MI
DUNN, DAVID T	NORWAY MI
GRAYSON, MCCOMMA II	DETROIT MI
HAGMAN, JAMES F	SHELBY TWP MI
HANNON, TIMOTHY R	WYOMING MI
HINDENACH, TIMOTHY MARK JR	GRANDVILLE MI
JELSONE, ROBERT V	ST CLAIR SHORES MI
LEFAIVE, TROY W	JACKSON MI
MEYERHUBER, JAMES G	SAGINAW MI
O'BRIEN, KELLY J	SOUTHGATE MI
OLSON, STEVE	MOUNT CLEMONS MI
SCOTT, CHRISTINE C	DAVISBURG MI
SHEARS, CLINTON N	JACKSON MI
SILVA, ERIC M	WALLED LAKE MI
SPICER, GREGORY M	MARION OH
TAWSE, ROBERT J	BRIGHTON MI
WEST, JAYSON T	BELLEVILLE MI

GMC
OIC 9/15/11
NB

Application for Master Plumber Examination

Michigan Department of Energy, Labor & Economic Growth
Bureau of Construction Codes / Plumbing Division
P.O. Box 30255, Lansing, MI 48909
517-241-9330
www.michigan.gov/bcc

Examination Fee: $100.00 (Nonrefundable)

Authority: 2002 PA 733
Completion: Necessary for examination consideration

DELEG is an equal opportunity employer/program. Auxiliary aids, services and other reasonable accommodations are available upon request

Out of State Experience

SIGNATURE (NO APPLICANT)
OR 3.9-11

of 4,000

- Complete and **sign original application**. Type or print in
- Master plumbers who supervised you as a journey plumbe
- Enclose a check made payable to the **State of Michigan**.
- Mail completed application **(all pages must be submittec**

GMC – YES

notarized.

Eligibility of Applicants From Another State or Country

A person who is licensed as a master plumber in another state or country may qualify for examination upon a determination by the board that the license was obtained by the person through substantially the same or equal requirements as those of the state of Michigan. Out-of-state/country applicants must provide a copy of their current license with the licensing rules and regulations from that state/country.

OFFICE USE ONLY
T-81 12631

Applicant Information

NAME (Last, First, Middle)		LAST 4 DIGITS OF SOCIAL SECURITY NUMBER*
Baker, Jeffrey		
HOME ADDRESS		DATE OF BIRTH
CITY		COUNTY
STATE	ZIP CODE	TELEPHONE NUMBER (Include Area Code)

Current Status

1. Have you previously applied to take the Michigan master plumber examination? ☐ Yes ☑ No
2. Have you been licensed as a journey plumber in Michigan? ☐ Yes ☑ No
   Journey Plumber License No. 82-_____
3. Are you licensed as a master plumber in another state or country? ☑ Yes ☐ No
   Master Plumber License No. MP209539 State/Country Georgia

Examination Preference

Examinations are conducted in March, June, September and December of each year. Please indicate a preference of examination date. If approved for examination, an admission card will be mailed to you approximately 10 days prior to the examination date. If the examination date you have selected is full, you will be scheduled for the next available examination.

Preferred Date
_____

☑ No Preference - Next Available Examination

If you have a disability and require an accommodation to take the examination, please submit written documentation from a professional (education professional, doctor, psychologist, psychiatrist) to certify that your disabling condition requires the requested test accommodation. Forms are available from this office.

*This information is confidential. Disclosure of confidential information is protected by the Federal Privacy Act.

Background Information

Have you been convicted of a felony or misdemeanor? ☑ Yes ☐ No

If yes, complete the Conviction History section below. Failure to accurately respond to this question will result in you forfeiting any rights of consideration for examination and issuance of a plumber's license in the state of Michigan.

Conviction History

In accordance with the Former Offenders Act, 1974 PA 381, this is to provide you with an opportunity to explain your affirmative response to the question above which asked if you had been convicted of a felony or misdemeanor.

If you are unsure of exact details, respond to the best of your knowledge. The information requested on this form is required under 2002 PA 733 and will be used to process your application. Attach additional sheet(s) if necessary.

YOUR NAME WHEN CONVICTED

Jeffrey Baker

INDICATE CONVICTION(S) FOR WHICH YOU WERE CHARGED

Theft by taking

DATE(S) OF CONVICTION(S) AND SENTENCE(S)

1994, five years probation - Released from civil liability in 2008, formal restoration of civil rights 2008-Eligible for full pardon 2011

NAME AND ADDRESS OF SENTENCING COURT(S)

Gwinnett Justice and Administration Center
75 Langley Dr
Lawrenceville, GA 30045

CHECK **YES** OR **NO** TO THE FOLLOWING

1. Are you a current inmate? ☐ Yes ☑ No
2. Are you currently on probation / parole? ☐ Yes ☑ No

If yes, provide the name, address and telephone number of the correctional facility, probation officer or parole officer.

RELEASE DATE FROM CUSTODY, PROBATION OR PAROLE

2003 release from probation

REHABILITATION PROGRAMS ENROLLED IN OR COMPLETED

GED completed in 1997, life skills, addiction awareness, Bipolar Disorder Rehabilitation 2003

Conviction History Certification and Signature (To be signed only if Conviction History section above is completed)

I hereby certify the statements and facts provided are true and accurate to the best of my knowledge. By signing this form, I give my permission to allow the Bureau of Construction Codes to contact appropriate agencies regarding my record of conviction(s).

SIGNATURE OF APPLICANT	DATE
[illegible]	2/7/11

Self employed
Licensed Master Unrestricted Since 2006

Employment Information - This section is to be completed by the master plumber supervising the applicant

NAME OF EMPLOYER			NAME OF MASTER PLUMBER
BUSINESS ADDRESS			DATES OF JOURNEY EMPLOYMENT (MO/DAY/YR) From: To:
CITY	STATE	ZIP CODE	☐ Full Time ☐ Part Time No. Hours/Week_____
TYPE OF WORK PERFORMED ☐ Residential ☐ Heavy Construction ☐ Industrial ☐ Commercial ☐ Maintenance ☐ Repair			
DESCRIPTION OF WORK			
I certify I am/was engaged in the business of being an authorized master plumber and the applicant was actually in my employ as a journey plumber installing plumbing. I further understand falsification of any statement is cause for rejection of application or revocation of license, if issued.			Subscribed and sworn before me, _____ this _____ day of _____, _____, a Notary Public in and for _____County, Michigan. Signature of Notary Public _____ My Commission expires: _____, _____
SIGNATURE OF MASTER PLUMBER			
LICENSE NUMBER			

Previous Employer - This section is to be completed by the master plumber who supervised the applicant

NAME OF EMPLOYER			NAME OF MASTER PLUMBER
BUSINESS ADDRESS			DATES OF JOURNEY EMPLOYMENT (MO/DAY/YR) From: To:
CITY	STATE	ZIP CODE	☐ Full Time ☐ Part Time No. Hours/Week_____
TYPE OF WORK PERFORMED ☐ Residential ☐ Heavy Construction ☐ Industrial ☐ Commercial ☐ Maintenance ☐ Repair			
DESCRIPTION OF WORK			
I certify I am/was engaged in the business of being an authorized master plumber and the applicant was actually in my employ as a journey plumber installing plumbing. I further understand falsification of any statement is cause for rejection of application or revocation of license, if issued.			Subscribed and sworn before me, _____ this _____ day of _____, _____, a Notary Public in and for _____County, Michigan. Signature of Notary Public _____ My Commission expires: _____, _____
SIGNATURE OF MASTER PLUMBER			
LICENSE NUMBER			

Certification and Signature (**Must** be signed by all applicants)

I certify the information provided is true and accurate to the best of my ability and that I have the experience required for this examination. I further understand falsification of any statement is cause for rejection of application or revocation of license, if issued.

SIGNATURE OF APPLICANT	DATE

77

Employment Information - This section is to be completed by the master plumber supervising the applicant

NAME OF EMPLOYER	NAME OF MASTER PLUMBER
BUSINESS ADDRESS	DATES OF JOURNEY EMPLOYMENT (MO/DAY/YR) From: To:
CITY / STATE / ZIP CODE	☐ Full Time ☐ Part Time No. Hours/Week_____
TYPE OF WORK PERFORMED ☐ Residential ☐ Heavy Construction ☐ Industrial ☐ Commercial ☐ Maintenance ☐ Repair	
DESCRIPTION OF WORK	
I certify I am/was engaged in the business of being an authorized master plumber and the applicant was actually in my employ as a journey plumber installing plumbing. I further understand falsification of any statement is cause for rejection of application or revocation of license, if issued.	Subscribed and sworn before me, _____ this _____ day of _____, _____, a Notary Public in and for _____County, Michigan. Signature of Notary Public _____
SIGNATURE OF MASTER PLUMBER	
LICENSE NUMBER	My Commission expires: _____, _____

Previous Employer - This section is to be completed by the master plumber who supervised the applicant

NAME OF EMPLOYER	NAME OF MASTER PLUMBER
BUSINESS ADDRESS	DATES OF JOURNEY EMPLOYMENT (MO/DAY/YR) From: To:
CITY / STATE / ZIP CODE	☐ Full Time ☐ Part Time No. Hours/Week_____
TYPE OF WORK PERFORMED ☐ Residential ☐ Heavy Construction ☐ Industrial ☐ Commercial ☐ Maintenance ☐ Repair	
DESCRIPTION OF WORK	
I certify I am/was engaged in the business of being an authorized master plumber and the applicant was actually in my employ as a journey plumber installing plumbing. I further understand falsification of any statement is cause for rejection of application or revocation of license, if issued.	Subscribed and sworn before me, _____ this _____ day of _____, _____, a Notary Public in and for _____County, Michigan. Signature of Notary Public _____
SIGNATURE OF MASTER PLUMBER	
LICENSE NUMBER	My Commission expires: _____, _____

Certification and Signature (**Must** be signed by all applicants)

I certify the information provided is true and accurate to the best of my ability and that I have the experience required for this examination. I further understand falsification of any statement is cause for rejection of application or revocation of license, if issued.	
SIGNATURE OF APPLICANT	DATE 3/7/11

BAKER, JEFFREY
PENDING MASTER APPLICANT

RICK SNYDER
GOVERNOR

STATE OF MICHIGAN
DEPARTMENT OF LICENSING AND REGULATORY AFFAIRS
BUREAU OF CONSTRUCTION CODES
IRVIN J. POKE
DIRECTOR

STEVEN H. HILFINGER
DIRECTOR

November 2, 2011

Mr. Jeff Baker

Dear Mr. Baker

A review of internet advertisements for your company indicates that you are performing plumbing work that requires a Michigan licensed master plumber and plumbing contractor. The State of Michigan plumbing license records indicate you have never been licensed nor have you been a registered apprentice. Your advertisements contain misleading information concerning your master plumber license.

You are in violation of the State Plumbing Act.

Section 338.3525 of the State Plumbing Act, 2002 PA 733, states in part:

(1) "A person shall not engage in or work at the business of a plumbing contractor, master plumber, journey plumber, or apprentice plumber unless licensed or registered by the department. Except as provided in subsections (2), (3), (4), and (5), plumbing shall be performed by a licensed master or journey plumber. A licensed master plumber shall be in charge and responsible for proper installation and conformance with the code. Plumbing shall not be performed unless the plumbing contractor who is responsible has secured a permit from the state or a governmental subdivision authorized to issue permits."

Violation penalties of the Act are addressed in Section 338.3559, which states:

A person licensed or registered under this act who commits a violation of this act, or person not licensed or registered under this act who is performing any activity regulated by this act and is not exempt from licensure or registration under this act, is guilty of a misdemeanor punishable by a fine of not less than $1,000.00 per day for each day the violation occurs except that a fine shall not exceed $5,000.00 in total per violation or punishable by imprisonment for not more than 90 days, or both.

Therefore, because you are not licensed as a plumbing contractor, and/or do not employ, a licensed master plumber, you are hereby ordered to immediately CEASE and DESIST performing such plumbing activities that require licensure. Failure to do so may result in further action by this agency.

Again, you are to cease and stop this practice immediately.

Further, upon receipt of this letter it is expected that you provide a written response explaining your position in this matter within ten business days. Following an evaluation of your response, we will contact you to discuss our further actions.

If you have any questions prior to your written response, you may contact me at (517) 241-9330.

Sincerely,

Robert G. Konyndyk, Chief
Plumbing Division

RGK/mkr

Department of Licensing and Regulatory Affairs
Bureau of Construction Codes, Plumbing Division, Robert G. Konyndyk
PO BOX 30254
Lansing MI 48909
In RE: Allegations, libel

Jeffrey Dwayne Baker Sr.
Master Plumber Unrestricted State of Georgia, MP209539

November 14, 2011

Dear Mr. Konyndyk,

Thank you for your perseverance in tracking down and prohibiting non licensed plumbers in the State of Michigan from performing work. It has been brought to my attention you are under the impression that I have conducted work in the State of Michigan without the proper licensure; I deny your allegations. I deny any and all allegations of any said illegal activities and or the performance of any trade in the State of Michigan without the proper licensure. I own no such plumbing or mechanical contracting firm in Michigan. I have requested that any advertising of my likeness be clarified to identify my professional licensure is from the State of Georgia.

Furthermore as a licensed Master Plumber who is unrestricted in the State of Georgia, I must say that in my opinion your actions seek only to exclude persons who are competent from performing their occupation and earning a decent living for their families. You and your board should be shamed for such actions and you raise a Federal question as to the constitutionality of your actions: *"Can a State who requires licensures based on the same standards, The International Plumbing Code, restrict the lawful right to contract within that State"?* I am sure you can derive that my opinion is that States who recognize The IPC should recognize the recipients of said licensure universally and for said boards to refuse the recognition of such licensure is absurd.

I have been advised of your threats to deny my right of acquiring licensure to satisfy your legal requirements for The State of Michigan based on your allegations. I will be in attendance of the December 13, 2011 meeting that your board has requested. I will be forwarding a copy of this communication to the Governor's Office as well. Remember that government derives its just powers from the consent of the governed Mr. Konyndyk.

Sincerely,

Jeffrey Dwayne Baker Sr.
Master Plumber Unrestricted, State of Georgia MP209539

C.C. Governor Rick Snyder

RICK SNYDER
GOVERNOR

STATE OF MICHIGAN
DEPARTMENT OF LICENSING AND REGULATORY AFFAIRS
BUREAU OF CONSTRUCTION CODES
IRVIN J. POKE
DIRECTOR

STEVEN H. HILFINGER
DIRECTOR

January 30, 2012

Mr. Jeffrey Baker

Dear Mr. Baker:

The Plumbing Division has received your Application for the **Master Plumber Examination**.

The Plumbing Division is scheduling you to appear before the State Plumbing Board for consideration of your out-of-state licensing experience. The next meeting will be held on **February 28, 2012**, located at 2501 Woodlake Circle, Okemos, Michigan. The meeting will begin at 10:00 a.m., Eastern Standard Time. A map is enclosed for your convenience.

You will be required to provide your original license issued from the **State of Georgia** and their licensing rules and regulations.

Pending the decision of the board, it would be advisable to be prepared for the examination to be held on **February 29, 2012**, located in East Lansing, Michigan.

If you have any further questions or are unable to attend, contact this office at (517)241-9330.

Sincerely,

Robert G. Konyndyk, Chief
Plumbing Division

RGK/sjl

Enclosure

Application for Master Plumber Examination

Michigan Department of Licensing and Regulatory Affairs
Bureau of Construction Codes / Plumbing Division
P.O. Box 30255, Lansing, MI 48909
517-241-9330
www.michigan.gov/bcc

Examination Fee: $100.00 (Nonrefundable)

Authority: 2002 PA 733 Completion: Necessary for examination consideration Penalty: Application cancelled and fee forfeited	LARA is an equal opportunity employer/program. Auxiliary aids, services and other reasonable accommodations are available upon request to individuals with disabilities.

Instructions: Applicant shall be at least 18 years of age, hold a journey license issued under 2002 PA 733 and have a minimum of 4,000 hours experience in work as a journey plumber over a period of at least 2 years immediately preceding the date of application.

- Complete and **sign original application**. Type or print in ink.
- Master plumbers who supervised you as a journey plumber must certify your dates of employment and have their signature notarized.
- Enclose a check made payable to the **State of Michigan**.
- Mail completed application **(all pages must be submitted)** and payment to the address listed above.

Eligibility of Applicants From Another State or Country

A person who is licensed as a master plumber in another state or country may qualify for examination upon a determination by the board that the license was obtained by the person through substantially the same or equal requirements as those of the state of Michigan. Out-of-state/country applicants must provide a copy of their current license with the licensing rules and regulations from that state/country.

OFFICE USE ONLY
T-81 12718

Applicant Information

NAME (Last, First, Middle) Spicer, Andrew, Anthony		LAST 4 DIGITS OF SOCIAL SECURITY NUMBER*
HOME ADDRESS		DATE OF BIRTH
CITY		COUNTY
STATE	ZIP CODE	TELEPHONE NUMBER (Include Area Code)

Current Status

1. Have you previously applied to take the Michigan master plumber examination? ☐ Yes ☑ No
2. Have you been licensed as a journey plumber in Michigan? ☐ Yes ☑ No
   Journey Plumber License No. 82-_____
3. Are you licensed as a master plumber in another state or country? ☑ Yes ☐ No
   Master Plumber License No. PL11687 State/Country Ohio/USA

Examination Preference

Examinations are conducted in March, June, September and December of each year. Please indicate a preference of examination date. If approved for examination, an admission card will be mailed to you approximately 10 days prior to the examination date. If the examination date you have selected is full, you will be scheduled for the next available examination.

Preferred Date
02/29/12

☐ No Preference - Next Available Examination

If you have a disability and require an accommodation to take the examination, please submit written documentation from a professional (education professional, doctor, psychologist, psychiatrist) to certify that your disabling condition requires the requested test accommodation. Forms are available from this office.

*This information is confidential. Disclosure of confidential information is protected by the Federal Privacy Act.

Background Information

Have you been convicted of a felony or misdemeanor? ☐ Yes ☑ No

If yes, complete the Conviction History section below. Failure to accurately respond to this question will result in you forfeiting any rights of consideration for examination and issuance of a plumber's license in the state of Michigan.

Conviction History

In accordance with the Former Offenders Act, 1974 PA 381, this is to provide you with an opportunity to explain your affirmative response to the question above which asked if you had been convicted of a felony or misdemeanor.

If you are unsure of exact details, respond to the best of your knowledge. The information requested on this form is required under 2002 PA 733 and will be used to process your application. Attach additional sheet(s) if necessary.

YOUR NAME WHEN CONVICTED
INDICATE CONVICTION(S) FOR WHICH YOU WERE CHARGED
DATE(S) OF CONVICTION(S) AND SENTENCE(S)
NAME AND ADDRESS OF SENTENCING COURT(S)

CHECK **YES** OR **NO** TO THE FOLLOWING

1. Are you a current inmate? ☐ Yes ☑ No
2. Are you currently on probation / parole? ☐ Yes ☑ No

If yes, provide the name, address and telephone number of the correctional facility, probation officer or parole officer.

RELEASE DATE FROM CUSTODY, PROBATION OR PAROLE
REHABILITATION PROGRAMS ENROLLED IN OR COMPLETED

Conviction History Certification and Signature (To be signed only if Conviction History section above is completed)

I hereby certify the statements and facts provided are true and accurate to the best of my knowledge. By signing this form, I give my permission to allow the Bureau of Construction Codes to contact appropriate agencies regarding my record of conviction(s).

SIGNATURE OF APPLICANT	DATE

Employm[redacted]

NAME OF EMPLOYER			NAME OF MASTER PLUMBER
BUSINESS ADDRESS			DATES OF JOURNEY EMPLOYMENT (MO/DAY/YR) From: To:
CITY	STATE	ZIP CODE	☐ Full Time ☐ Part Time No. Hours/Week_____

TYPE OF WORK PERFORMED

☐ Residential ☐ Heavy Construction ☐ Industrial ☐ Commercial ☐ Maintenance ☐ Repair

DESCRIPTION OF WORK

I certify I am/was engaged in the business of being an authorized master plumber and the applicant was actually in my employ as a journey plumber installing plumbing. I further understand falsification of any statement is cause for rejection of application or revocation of license, if issued.

SIGNATURE OF MASTER PLUMBER: Andrew C. Jim

LICENSE NUMBER: PL 11687

Subscribed and sworn before me, Karen L. Grace

this 16th day of January 2012, _____,

a Notary Public in and for Wayne County, Michigan.

Signature of Notary Public: Karen L. Grace

My Commission expires: July 9, 2012

Previous Employer - This section is to be completed by the master plumber who supervised the applicant

NAME OF EMPLOYER			NAME OF MASTER PLUMBER
BUSINESS ADDRESS			DATES OF JOURNEY EMPLOYMENT (MO/DAY/YR) From: To:
CITY	STATE	ZIP CODE	☐ Full Time ☐ Part Time No. Hours/Week_____

TYPE OF WORK PERFORMED

☐ Residential ☐ Heavy Construction ☐ Industrial ☐ Commercial ☐ Maintenance ☐ Repair

DESCRIPTION OF WORK

I certify I am/was engaged in the business of being an authorized master plumber and the applicant was actually in my employ as a journey plumber installing plumbing. I further understand falsification of any statement is cause for rejection of application or revocation of license, if issued.

SIGNATURE OF MASTER PLUMBER

LICENSE NUMBER

Subscribed and sworn before me, [redacted]

this _____ day of _____, _____,

a Notary Public in and for _____ County, Michigan.

Signature of Notary Public _____

My Commission expires: _____, _____

Certification and Signature (**Must** be signed by all applicants)

I certify the information provided is true and accurate to the best of my ability and that I have the experience required for this examination. I further understand falsification of any statement is cause for rejection of application or revocation of license, if issued.

SIGNATURE OF APPLICANT	DATE
Andrew C. Jim	1-16-2012

Employment Information - This section is to be completed by the master plumber supervising the applicant

NAME OF EMPLOYER: GRAB Mechanical	NAME OF MASTER PLUMBER: Andrew A. Spicer
BUSINESS ADDRESS: 621 Third St.	DATES OF JOURNEY EMPLOYMENT (MO/DAY/YR) From: 08/2007 To: Present
CITY: Portsmouth STATE: Ohio ZIP CODE: 45662	☒ Full Time ☐ Part Time No. Hours/Week ____
TYPE OF WORK PERFORMED: ☐ Residential ☐ Heavy Construction ☐ Industrial ☒ Commercial ☐ Maintenance ☐ Repair	
DESCRIPTION OF WORK: New Building PIBG, including PVC, CAST DWV, Copper & PVC/ ductile water lines, GAS lines, Visible/ BLACK IRON/MJ, / WARDFLEX, Fixture sets on carriers / without, Mechanical Rooms w/ Comm. water heaters, softeners / Backflows, Underground, top out / final air testing	
I certify I am/was engaged in the business of being an authorized master plumber and the applicant was actually in my employ as a journey plumber installing plumbing. I further understand falsification of any statement is cause for rejection of application or revocation of license, if issued.	Subscribed and sworn before me, ____ this ____ day of ____, ____ a Notary Public in and for ____ County, Michigan. Signature of Notary Public ____ My Commission expires: ____, ____
SIGNATURE OF MASTER PLUMBER:	
LICENSE NUMBER: PL11687	

OK per phone - Int. RAK

Previous Employer - This section is to be completed by the master plumber who supervised the applicant → 08/12/2008

NAME OF EMPLOYER: Alltek Plbg/Htg.	NAME OF MASTER PLUMBER (deceased): Chris Spicer / Christine Spicer
BUSINESS ADDRESS: 3739 Grubb Rd.	DATES OF JOURNEY EMPLOYMENT (MO/DAY/YR) From: 01/2001 To: 08/2007
CITY: Delphos STATE: Ohio ZIP CODE: 45833	☒ Full Time ☐ Part Time No. Hours/Week ____
TYPE OF WORK PERFORMED: ☒ Residential ☐ Heavy Construction ☒ Industrial ☒ Commercial ☒ Maintenance ☐ Repair	
DESCRIPTION OF WORK: All phases of plumbing from drawing isometrics to installation of DWV/Domestic water for schools, hotels, nursinghomes, residential custom homes, Boiler installations, Geothermal Systems / Backflows, GAS Lines / AIR/WATER Testing, Fixture Sets	
I certify I am/was engaged in the business of being an authorized master plumber and the applicant was actually in my employ as a journey plumber installing plumbing. I further understand falsification of any statement is cause for rejection of application or revocation of license, if issued.	Subscribed and sworn before me, ____ this ____ day of February, 2012 a Notary Public in and for ____ County, Michigan. Signature of Notary Public ____ My Commission expires: May 3, 2014
SIGNATURE OF MASTER PLUMBER:	
LICENSE NUMBER: 31528	

NOTARIAL SEAL STATE OF OHIO KARA D. HOWELL Notary Public, State of Ohio My Commission Expires May 3, 2014

Certification and Signature (**Must** be signed by all applicants)

I certify the information provided is true and accurate to the best of my ability and that I have the experience required for this examination. I further understand falsification of any statement is cause for rejection of application or revocation of license, if issued.

SIGNATURE OF APPLICANT:	DATE: 2-7-2012

Department of Commerce
Division of Industrial Compliance & Labor

John R. Kasich, Governor
David Goodman, Director

February 06, 2012

SPICER, ANDREW A
621 3rd St
Portsmouth, OH 45662-3903

LETTER OF GOOD STANDING

To whom it may concern:

RE: ANDREW A SPICER
OH LIC# PL.11687

Please be advised that ANDREW A SPICER is licensed by the Ohio Construction Industry Licensing Board. ANDREW A SPICER has held an active, current and valid license with no negative issues since **September 30, 1993**. ANDREW A SPICER passed our exam in **1993.**

If you should require further information on the above, please contact OCILB at 614-644-3493.

Sincerely,

Jacqueline M Hicks – Customer Service Asst. II
The Ohio Construction Industry Licensing Board

GMC
OK 1/30/12

Application for Master Plumber Examination

Michigan Department of Licensing and Regulatory Affairs
Bureau of Construction Codes / Plumbing Division
P.O. Box 30255, Lansing, MI 48909
517-241-9330
www.michigan.gov/bcc

Examination Fee: $100.00 (Nonrefundable)

Authority: 2002 PA 733 Completion: Necessary for examination consideration Penalty: Application cancelled and fee forfeited	LARA is an equal opportunity employer/program. Auxiliary aids, services and other reasonable accommodations are available upon request to individuals with disabilities.

Instructions: Applicant shall be at least 18 years of age, hold a journey license issued under 2002 PA 733 and have a minimum of 4,000 hours experience in work as a journey plumber over a period of at least 2 years immediately preceding the date of application.

- Complete and **sign original application**. Type or print in ink.
- Master plumbers who supervised you as a journey plumber must certify your dates of employment and have their signature notarized.
- Enclose a check made payable to the **State of Michigan**.
- Mail completed application **(all pages must be submitted)** and payment to the address listed above.

Eligibility of Applicants From Another State or Country

A person who is licensed as a master plumber in another state or country may qualify for examination upon a determination by the board tha ie same or equal requirements as those of the state of Michigan. Out- of- nse with the licensing rules and regulations from that state/country.

Out of State Experience
Needs Board Scheduled

OFFICE USE ONLY
T-81 12720

Applicant Information

NAME (Last, First, Middle) Spicer, Gregory, Mark	LAST 4 DIGITS OF SOCIAL SECURITY NUMBER*
HOME ADDRESS	DATE OF BIRTH
CITY	COUNTY
STATE / ZIP CODE	TELEPHONE NUMBER (Include Area Code)

Current Status

1. Have you previously applied to take the Michigan master plumber examination? ☐ Yes ☑ No
2. Have you been licensed as a journey plumber in Michigan? ☐ Yes ☑ No
   Journey Plumber License No. 82-_____
3. Are you licensed as a master plumber in another state or country? ☑ Yes ☐ No
   Master Plumber License No. 15872 State/Country Ohio/USA

Examination Preference

Examinations are conducted in March, June, September and December of each year. Please indicate a preference of examination date. If approved for examination, an admission card will be mailed to you approximately 10 days prior to the examination date. If the examination date you have selected is full, you will be scheduled for the next available examination.

Preferred Date
02/29/12

☐ No Preference - Next Available Examination

If you have a disability and require an accommodation to take the examination, please submit written documentation from a professional (education professional, doctor, psychologist, psychiatrist) to certify that your disabling condition requires the requested test accommodation. Forms are available from this office.

*This information is confidential. Disclosure of confidential information is protected by the Federal Privacy Act.

Background Information

Have you been convicted of a felony or misdemeanor? ☐ Yes ☑ No

If yes, complete the Conviction History section below. Failure to accurately respond to this question will result in you forfeiting any rights of consideration for examination and issuance of a plumber's license in the state of Michigan.

Conviction History

In accordance with the Former Offenders Act, 1974 PA 381, this is to provide you with an opportunity to explain your affirmative response to the question above which asked if you had been convicted of a felony or misdemeanor.

If you are unsure of exact details, respond to the best of your knowledge. The information requested on this form is required under 2002 PA 733 and will be used to process your application. Attach additional sheet(s) if necessary.

YOUR NAME WHEN CONVICTED
INDICATE CONVICTION(S) FOR WHICH YOU WERE CHARGED
DATE(S) OF CONVICTION(S) AND SENTENCE(S)
NAME AND ADDRESS OF SENTENCING COURT(S)
CHECK **YES** OR **NO** TO THE FOLLOWING 1. Are you a current inmate? ☐ Yes ☑ No 2. Are you currently on probation / parole? ☐ Yes ☑ No If yes, provide the name, address and telephone number of the correctional facility, probation officer or parole officer.
RELEASE DATE FROM CUSTODY, PROBATION OR PAROLE
REHABILITATION PROGRAMS ENROLLED IN OR COMPLETED

Conviction History Certification and Signature (To be signed only if Conviction History section above is completed)

I hereby certify the statements and facts provided are true and accurate to the best of my knowledge. By signing this form, I give my permission to allow the Bureau of Construction Codes to contact appropriate agencies regarding my record of conviction(s).

SIGNATURE OF APPLICANT	DATE

Employment Information - This section is to be completed by the master plumber supervising the applicant

NAME OF EMPLOYER Gregory M. Spicer d.b.a. Spicer Plumbing + Mechanical	NAME OF MASTER PLUMBER Gregory M. Spicer [redacted]
BUSINESS ADDRESS 1517 Eagle Links Dr. [redacted]	
CITY Marion / STATE Ohio / ZIP CODE 43302	☐ Full Time ☐ Part Time [redacted]
TYPE OF WORK PERFORMED ☐ Residential ☐ Heavy Construction ☐ Industrial ☒ Commercial	☐ Maintenance ☐ Repair
DESCRIPTION OF WORK New Commerical Plumbing	NOTARY PUBLIC – MICHIGAN WASHTENAW COUNTY ACTING IN THE COUNTY OF Washtenaw MY COMMISSION EXPIRES 5-6-2017
I certify I am/was engaged in the business of being an authorized master plumber and the applicant was actually in my employ as a journey plumber installing plumbing. I further understand falsification of any statement is cause for rejection of application or revocation of license, if issued.	Subscribed and sworn before me, Abby Louder this 10 day of January, 2012, a Notary Public in and for Washtenaw County, Michigan.
SIGNATURE OF MASTER PLUMBER Gregory M Spicer	Signature of Notary Public Abby Louder
LICENSE NUMBER Ohio License # 15872	My Commission expires: May 6, 2017

Okay Per Bob 1-26-12

Previous Employer - This section is to be completed by the master plumber who supervised the applicant

NAME OF EMPLOYER Same as Above	NAME OF MASTER PLUMBER
BUSINESS ADDRESS	DATES OF JOURNEY EMPLOYMENT (MO/DAY/YR) From: To:
CITY / STATE / ZIP CODE	☐ Full Time ☐ Part Time No. Hours/Week
TYPE OF WORK PERFORMED ☐ Residential ☐ Heavy Construction ☐ Industrial ☐ Commercial ☐ Maintenance ☐ Repair	
DESCRIPTION OF WORK	
I certify I am/was engaged in the business of being an authorized master plumber and the applicant was actually in my employ as a journey plumber installing plumbing. I further understand falsification of any statement is cause for rejection of application or revocation of license, if issued.	Subscribed and sworn before me, ____ this ____ day of ____, ____, a Notary Public in and for ____ County, Michigan.
SIGNATURE OF MASTER PLUMBER Gregory M Spicer	Signature of Notary Public ____
LICENSE NUMBER	My Commission expires: ____, ____

Certification and Signature (**Must** be signed by all applicants)

I certify the information provided is true and accurate to the best of my ability and that I have the experience required for this examination. I further understand falsification of any statement is cause for rejection of application or revocation of license, if issued.

SIGNATURE OF APPLICANT Gregory M Spicer	DATE 1-10-12

Gmc
OK 12/14/11
NB

Application for Journey Plumber Examination

Michigan Department of Licensing and Regulatory Affairs
Bureau of Construction Codes / Plumbing Division
P.O. Box 30255, Lansing, MI 48909
517-241-9330
www.michigan.gov/bcc

Examination Fee: $100.00 (Nonrefundable)

Authority: 2002 PA 733 Completion: Necessary for examination consideration Penalty: Application cancelled and fee forfeited	LARA is an equal opportunity employer/program. Auxiliary aids, services and other reasonable accommodations are available upon request to individuals with disabilities.

Instructions: Applicant shall be at least 18 years of age and have 6,000 hours experience over a period of not less than 3 years. The experience shall be under the supervision of a master plumber. **Applicant shall be a current registered Michigan apprentice under 2002 PA 733.**

- Complete and **sign original application**. Type or print in ink.
- [illegible] your dates of employment and have their signature notarized.
- [illegible] nent to the address listed above.

Out of State Experience

OFFICE USE ONLY
T-82 23539

Applicant Information

NAME (Last, First, Middle) Dendinger, Greg Scott		LAST 4 DIGITS OF SOCIAL SECURITY NUMBER*
HOME ADDRESS		DATE OF BIRTH
CITY		COUNTY
STATE	ZIP CODE	TELEPHONE NUMBER (Include Area Code)

Current Status

1. Have you previously applied to take the Michigan journey plumber examination? ☐ Yes ☑ No
2. Are you now licensed as a journey plumber in another state or country? ☑ Yes ☐ No
   Journey Plumber License No. SXC-ia-e0908-10-2465p State/Country south dakota
3. Are you registered as an apprentice with the State of Michigan? ☐ Yes ☑ No
   Apprentice No. 83-_____

Examination Preference

Examinations are conducted in March, June, September and December of each year. Please indicate a preference of examination date. If approved for examination, an admission card will be mailed to you approximately 10 days prior to the examination date. If the examination date you have selected is full, you will be scheduled for the next available examination.

Preferred Date _____

☑ No Preference - Next Available Examination

Tran Info:95 17300775-1 12/08/11
Chk#: 2038 Amt: $100.00
ID: GREGORY DENDINGER

If you have a disability and require an accommodation to take the examination, please submit written documentation from a professional (education professional, doctor, psychologist, psychiatrist) to certify that your disabling condition requires the requested test accommodation. Forms are available from this office.

Apprenticeship School

1. Have you attended a joint apprenticeship school? ☐ Yes (complete information below) ☑ No

NAME OF SCHOOL	CITY	STATE
INSTRUCTOR	DATES ATTENDED (MO/DAY/YR) From:	To:

2. Have you attended other plumbing schools (military, adult education, etc.)? ☐ Yes (complete information below) ☑ No

NAME OF SCHOOL	CITY	STATE
INSTRUCTOR	DATES ATTENDED (MO/DAY/YR) From:	To:

*This information is confidential. Disclosure of confidential information is protected by the Federal Privacy Act.

Education

HIGH SCHOOL		COLLEGE / UNIVERSITY	
west high			
CITY	STATE	CITY	STATE
sioux city	ia		
HIGHEST GRADE COMPLETED	DATE GRADUATED	MAJOR	DATE GRADUATED
12	1997		

Background Information

Have you been convicted of a felony or misdemeanor? ☐ Yes ☑ No

If yes, complete the Conviction History section below. Failure to accurately respond to this question will result in you forfeiting any rights of consideration for examination and issuance of a plumber's license in the state of Michigan.

Conviction History

In accordance with the Former Offenders Act, 1974 PA 381, this is to provide you with an opportunity to explain your affirmative response to the question above which asked if you had been convicted of a felony or misdemeanor.

If you are unsure of exact details, respond to the best of your knowledge. The information requested on this form is required under 2002 PA 733 and will be used to process your application. Attach additional sheet(s) if necessary.

YOUR NAME WHEN CONVICTED

INDICATE CONVICTION(S) FOR WHICH YOU WERE CHARGED

DATE(S) OF CONVICTION(S) AND SENTENCE(S)

NAME AND ADDRESS OF SENTENCING COURT(S)

CHECK YES OR NO TO THE FOLLOWING

1. Are you a current inmate? ☐ Yes ☑ No
2. Are you currently on probation / parole? ☐ Yes ☑ No

If yes, provide the name, address and telephone number of the correctional facility, probation officer or parole officer.

RELEASE DATE FROM CUSTODY, PROBATION OR PAROLE

REHABILITATION PROGRAMS ENROLLED IN OR COMPLETED

Conviction History Certification and Signature (To be signed only if Conviction History section above is completed)

I hereby certify the statements and facts provided are true and accurate to the best of my knowledge. By signing this form, I give my permission to allow the Bureau of Construction Codes to contact appropriate agencies regarding my record of conviction(s).

SIGNATURE OF APPLICANT	DATE

Experience Record

Master plumbers completing the work history information shall begin with the most recent employment and continue in reverse time order. Describe the type of work performed in detail to enable the reviewer to correctly evaluate qualifications. List each position held as an apprentice plumber. If there is a lapse in employment (military service, jobs unrelated to plumbing, unemployment, etc) please explain.

Part-Time Experience

If the applicant has any part-time experience, or if period of employment starts before graduation from high school or while attending college, a separate sheet on company letterhead must be attached documenting exactly how many hours were worked each week during the period. The attached sheet must also be notarized and signed by the authorized master plumber including his/her license number.

Out-of-State/Country Experience

A person **who is licensed** as a journey plumber in another state or country may qualify for examination upon a determination by the Board that the license was obtained by the person through substantially the same or equal requirements as those of the state of Michigan. Out of state/country applicants must provide a copy of their current license with the licensing rules and regulations from that state/country. If the applicant has out-of-state/country experience, **but not licensed**, the applicant must provide a license certification letter from that state's licensing entity to verify their employer held a license as a plumbing contractor during their employment.

Present Employer - This section is to be completed by the master plumber supervising the applicant

NAME OF EMPLOYER INTERSTATE MECHANICAL CORP.	NAME OF MASTER PLUMBER GARY MOBERG
BUSINESS ADDRESS 418 IOWA STREET	DATES OF APPRENTICE'S EMPLOYMENT (MO/DAY/YR) From: JUNE, 2005 To: AUGUST, 2010
CITY: SIOUX CITY / STATE: IA / ZIP CODE: 51101	☒ Full Time ☐ Part Time No. Hours/Week_____
TYPE OF WORK PERFORMED ☐ Residential ☑ Heavy Construction ☑ Industrial ☑ Commercial ☑ Maintenance ☑ Repair	
DESCRIPTION OF WORK PLUMBING, HYDRONICS, SITE UTILITIES, OPERATED BACKHOES, SID LOADERS, EXCAVATORS.	
I certify I am/was engaged in the business of being an authorized master plumber and the applicant was actually in my employ as an apprentice whose principal occupation was engaged in learning and assisting in the practical installation of plumbing drainage. I further understand falsification of any statement is cause for rejection of application or revocation of license, if issued. SIGNATURE OF MASTER PLUMBER LICENSE NUMBER SD SLN-IA-E0223-95-1173C IOWA #: 02683	Subscribed and sworn before me, _____ this 2ND day of DECEMBER, 2011, _____ a Notary Public in and for WOODBURY County, Michigan. Signature of Notary Public Jo Lynn Bourassa My Commission expires: 2-11-12, _____ NOTARIAL SEAL IOWA JO LYNN BOURASSA Commission Number 146200 MY COMMISSION EXPIRES 2-11-12

Previous Employer - This section is to be completed by the master plumber who supervised the applicant

NAME OF EMPLOYER	NAME OF MASTER PLUMBER
BUSINESS ADDRESS	DATES OF APPRENTICE'S EMPLOYMENT (MO/DAY/YR) From: To:
CITY / STATE / ZIP CODE	☐ Full Time ☐ Part Time No. Hours/Week_____
TYPE OF WORK PERFORMED ☐ Residential ☐ Heavy Construction ☐ Industrial ☐ Commercial ☐ Maintenance ☐ Repair	
DESCRIPTION OF WORK	
I certify I am/was engaged in the business of being an authorized master plumber and the applicant was actually in my employ as an apprentice whose principal occupation was engaged in learning and assisting in the practical installation of plumbing drainage. I further understand falsification of any statement is cause for rejection of application or revocation of license, if issued.	Subscribed and sworn before me, _____ this _____ day of _____, _____, a Notary Public in and for _____County, Michigan. Signature of Notary Public _____ My Commission expires: _____, _____
SIGNATURE OF MASTER PLUMBER	
LICENSE NUMBER	

Previous Employer - This section is to be completed by the master plumber who supervised the applicant

NAME OF EMPLOYER	NAME OF MASTER PLUMBER
BUSINESS ADDRESS	DATES OF APPRENTICE'S EMPLOYMENT (MO/DAY/YR) From: To:
CITY / STATE / ZIP CODE	☐ Full Time ☐ Part Time No. Hours/Week_____
TYPE OF WORK PERFORMED ☐ Residential ☐ Heavy Construction ☐ Industrial ☐ Commercial ☐ Maintenance ☐ Repair	
DESCRIPTION OF WORK	
I certify I am/was engaged in the business of being an authorized master plumber and the applicant was actually in my employ as an apprentice whose principal occupation was engaged in learning and assisting in the practical installation of plumbing drainage. I further understand falsification of any statement is cause for rejection of application or revocation of license, if issued.	Subscribed and sworn before me, _____ this _____ day of _____, _____, a Notary Public in and for _____County, Michigan. Signature of Notary Public _____ My Commission expires: _____, _____
SIGNATURE OF MASTER PLUMBER	
LICENSE NUMBER	

Certification and Signature (Must be signed by all applicants)

I certify the information provided is true and accurate to the best of my ability and that I have the experience required for this examination. I further understand falsification of any statement is cause for rejection of application or revocation of license, if issued.

SIGNATURE OF APPLICANT	DATE
	10/29/2011

GMC
OK 12/27/11
B

Application for Journey Plumber Examination

Michigan Department of Licensing and Regulatory Affairs
Bureau of Construction Codes / Plumbing Division
P.O. Box 30255, Lansing, MI 48909
517-241-9330
www.michigan.gov/bcc

Tran Info:95 17254101-1 11/23/11
Chk#: 373635 Amt: $100.00
ID: J F AHERN CO

Examination Fee: $100.00 (Nonrefundable)

Authority: 2002 PA 733 Completion Necessary for examination consideration Penalty:	LARA is an equal opportunity employer/program. Auxiliary aids, services and other reasonable accommodations are available upon request to individuals with disabilities.

Instruction ...erience over a period of not less than 3 years. The experience shall be under th... **ered Michigan apprentice under 2002 PA 733.**

INCOMPLETE APPLICATION P94

- Complete ...
- Master plumber ... ...yment and have their signature notarized.
- Enclose a chec...
- Mail completed ... listed above.

GMC – YES **Out of State Experience**

OFFICE USE ONLY
T-82 23533

Applicant Information

NAME (Last, First, Middle) Moyer Anthony Scott		LAST 4 DIGITS OF SOCIAL SECURITY NUMBER*
HOME ADDRESS		DATE OF BIRTH
CITY		COUNTY
STATE	ZIP CODE	TELEPHONE NUMBER (Include Area Code)

Current Status

1. Have you previously applied to take the Michigan journey plumber examination? ☐ Yes ☒ No
2. Are you now licensed as a journey plumber in another state or country? ☒ Yes ☐ No
   Journey Plumber License No. 220193 State/Country WI / USA
3. Are you registered as an apprentice with the State of Michigan? ☐ Yes ☒ No
   Apprentice No. 83-_____

Examination Preference

Examinations are conducted in March, June, September and December of each year. Please indicate a preference of examination date. If approved for examination, an admission card will be mailed to you approximately 10 days prior to the examination date. If the examination date you have selected is full, you will be scheduled for the next available examination.

Preferred Date
March

☐ No Preference - Next Available Examination

If you have a disability and require an accommodation to take the examination, please submit written documentation from a professional (education professional, doctor, psychologist, psychiatrist) to certify that your disabling condition requires the requested test accommodation. Forms are available from this office.

Apprenticeship School

1. Have you attended a joint apprenticeship school? ☒ Yes (complete information below) ☐ No

NAME OF SCHOOL	CITY	STATE
MPTC	Fond du Lac	WI
INSTRUCTOR Jerry Shehann	DATES ATTENDED (MO/DAY/YR) From: 1989	To: 1993

2. Have you attended other plumbing schools (military, adult education, etc.)? ☐ Yes (complete information below) ☒ No

NAME OF SCHOOL	CITY	STATE
INSTRUCTOR	DATES ATTENDED (MO/DAY/YR) From:	To:

*This information is confidential. Disclosure of confidential information is protected by the Federal Privacy Act.

Education

HIGH SCHOOL		COLLEGE / UNIVERSITY	
L.P Goodrich		MPTC	
CITY: Fond du Lac	STATE: WI	CITY: Fond du Lac	STATE: WI
HIGHEST GRADE COMPLETED: 12	DATE GRADUATED: June 1987	MAJOR: Plumbing	DATE GRADUATED: 1993

Background Information

Have you been convicted of a felony or misdemeanor? ☒ Yes ☐ No

If yes, complete the Conviction History section below. Failure to accurately respond to this question will result in you forfeiting any rights of consideration for examination and issuance of a plumber's license in the state of Michigan.

Conviction History

In accordance with the Former Offenders Act, 1974 PA 381, this is to provide you with an opportunity to explain your affirmative response to the question above which asked if you had been convicted of a felony or misdemeanor.

If you are unsure of exact details, respond to the best of your knowledge. The information requested on this form is required under 2002 PA 733 and will be used to process your application. Attach additional sheet(s) if necessary.

YOUR NAME WHEN CONVICTED

Tony Moyer

INDICATE CONVICTION(S) FOR WHICH YOU WERE CHARGED

Disorderly Conduct

DATE(S) OF CONVICTION(S) AND SENTENCE(S)

May 1991

NAME AND ADDRESS OF SENTENCING COURT(S)

Port Washington WI
1201 S. Spring St.
Port Washington WI 53074

CHECK **YES** OR **NO** TO THE FOLLOWING

1. Are you a current inmate? ☐ Yes ☒ No
2. Are you currently on probation / parole? ☐ Yes ☒ No

If yes, provide the name, address and telephone number of the correctional facility, probation officer or parole officer.

N/A

RELEASE DATE FROM CUSTODY, PROBATION OR PAROLE

N/A

REHABILITATION PROGRAMS ENROLLED IN OR COMPLETED

Conviction History Certification and Signature (To be signed only if Conviction History section above is completed)

I hereby certify the statements and facts provided are true and accurate to the best of my knowledge. By signing this form, I give my permission to allow the Bureau of Construction Codes to contact appropriate agencies regarding my record of conviction(s).

SIGNATURE OF APPLICANT	DATE
[signature]	11-11-2011

Experience Record

Master plumbers completing the work history information shall begin with the most recent employment and continue in reverse time order. Describe the type of work performed in detail to enable the reviewer to correctly evaluate qualifications. List each position held as an apprentice plumber. If there is a lapse in employment (military service, jobs unrelated to plumbing, unemployment, etc) please explain.

Part-Time Experience

If the applicant has any part-time experience, or if period of employment starts before graduation from high school or while attending college, a separate sheet on company letterhead must be attached documenting exactly how many hours were worked each week during the period. The attached sheet must also be notarized and signed by the authorized master plumber including his/her license number.

Out-of-State/Country Experience

A person **who is licensed** as a journey plumber in another state or country may qualify for examination upon a determination by the Board that the license was obtained by the person through substantially the same or equal requirements as those of the state of Michigan. Out of state/country applicants must provide a copy of their current license with the licensing rules and regulations from that state/country. If the applicant has out-of-state/country experience, **but not licensed**, the applicant must provide a license certification letter from that state's licensing entity to verify their employer held a license as a plumbing contractor during their employment.

Present Employer - This section is to be completed by the master plumber supervising the applicant

NAME OF EMPLOYER J.F. Ahern Co.	NAME OF MASTER PLUMBER John Klinzing
BUSINESS ADDRESS 855 Morris St	DATES OF APPRENTICE'S EMPLOYMENT (~~MO~~DAY/YR) From: To:
CITY: Fond du Lac; STATE: WI; ZIP CODE: 54935	☐ Full Time ☐ Part Time No. Hours/Week_____
TYPE OF WORK PERFORMED ☐ Residential ☐ Heavy Construction ☒ Industrial ☒ Commercial ☐ Maintenance ☐ Repair	
DESCRIPTION OF WORK I have worked in Health care, dorms and factorys for the past 24 years. Mostly Health Care.	
I certify I am/was engaged in the business of being an authorized master plumber and the applicant was actually in my employ as an apprentice whose principal occupation was engaged in learning and assisting in the practical installation of plumbing drainage. I further understand falsification of any statement is cause for rejection of application or revocation of license, if issued.	Subscribed and sworn before me, _____ this _____ day of _____, _____, a Notary Public in and for _____County, Michigan. Signature of Notary Public _____ My Commission expires: _____, _____
SIGNATURE OF MASTER PLUMBER [signature]	
LICENSE NUMBER Wisconsin MP 223628	

Experience Record

Master plumbers completing the work history information shall begin with the most recent employment and continue in reverse time order. Describe the type of work performed in detail to enable the reviewer to correctly evaluate qualifications. List each position held as an apprentice plumber. If there is a lapse in employment (military service, jobs unrelated to plumbing, unemployment, etc) please explain.

Part-Time Experience

If the applicant has any part-time experience, or if period of employment starts before graduation from high school or while attending college, a separate sheet on company letterhead must be attached documenting exactly how many hours were worked each week during the period. The attached sheet must also be notarized and signed by the authorized master plumber including his/her license number.

Out-of-State/Country Experience

A person **who is licensed** as a journey plumber in another state or country may qualify for examination upon a determination by the Board that the license was obtained by the person through substantially the same or equal requirements as those of the state of Michigan. Out of state/country applicants must provide a copy of their current license with the licensing rules and regulations from that state/country. If the applicant has out-of-state/country experience, **but not licensed**, the applicant must provide a license certification letter from that state's licensing entity to verify their employer held a license as a plumbing contractor during their employment.

Present Employer - This section is to be completed by the master plumber supervising the applicant

NAME OF EMPLOYER	NAME OF MASTER PLUMBER
J.F. Ahern Co.	John Klinzing [redacted]
BUSINESS ADDRESS: 855 Morris St	[redacted] 03/14/89 [redacted] Present
CITY: Fond du Lac / STATE: WI / ZIP CODE: 54935	☒ Full Time ☐ Part Time No. Hours/Week_____

TYPE OF WORK PERFORMED

☐ Residential ☐ Heavy Construction ☒ Industrial ☒ Commercial ☐ Maintenance ☐ Repair

DESCRIPTION OF WORK

I have worked in healthcare, dorms, and factories for the past 24 years - mostly healthcare.

I certify I am/was engaged in the business of being an authorized master plumber and the applicant was actually in my employ as an apprentice whose principal occupation was engaged in learning and assisting in the practical installation of plumbing drainage. I further understand falsification of any statement is cause for rejection of application or revocation of license, if issued.

SIGNATURE OF MASTER PLUMBER: John Klinzing

LICENSE NUMBER: Wisconsin MP 223628

[redacted]

Subscribed and sworn before me, _____

this 14 day of December

a Notary Public in and for Fond du Lac County, Michigan WI

Signature of Notary Public Denee M. Kiefer

My Commission expires: 6-23-13

DENEE M. KIEFER NOTARY PUBLIC STATE OF WISCONSIN

Application for Construction Code Appeal

Michigan Department of Licensing and Regulatory Affairs
Bureau of Construction Codes
P.O. Box 30255, Lansing, MI 48909
517-241-9328
www.michigan.gov/bcc

Agency Use Only
CCC-Plbg-12-003
11-30-11 $500.00

Application Fee: $500.00

Authority: 1972 PA 230 Completion: Voluntary Penalty: Appeal will not be heard	LARA is an equal opportunity employer/program. Auxiliary aids, services and other reasonable accommodations are available upon request to individuals with disabilities.

Note: The applicant is responsible for all fees applicable to this application.

FACILITY INFORMATION

FACILITY NAME	ADDRESS
Greenville Public Schools - High School Stadium	111 N. Hillcrest

Tran Info:99 17274570-1 11/30/11
Chk#: 67627 Amt: $500.00
To: GREENVILLE PUBLIC SCHOOLS

NAME OF CITY, VILLAGE OR TOWNSHIP IN WHICH FACILITY IS LOCATED
☑ City ☐ Village ☐ Township Of: Greenville

COUNTY: Montcalm

BUILDING DATA

GROSS FLOOR AREA
☑ New Building 13500 sf ☐ Addition _____ ☐ Alteration _____ ☐ Repair _____

CLASSIFICATION PER BUILDING CODE
Building Use ED Construction Type II(000) No. of Occupants _____ Area/Floor _____ No. of Floors _____

PERMIT HOLDER

NAME (Company or Individual)	CONTACT PERSON	TELEPHONE NUMBER (Include Area Code)
URS Corporation	Ralph W. Moxley	(616) 574-8384

ADDRESS	CITY	STATE	ZIP CODE	FAX NUMBER (Include Area Code)
3950 Sparks Drive SE	Grand Rapids	MI	49546	(616) 574-8542

BUILDING OWNER

NAME (Company or Individual)	CONTACT PERSON	TELEPHONE NUMBER (Include Area Code)
Greenville Public Schools	Ron Hofmann	(616) 754-4436

ADDRESS	CITY	STATE	ZIP CODE	FAX NUMBER (Include Area Code)
1414 Chase Road	Greenville	MI	48838	(616) 754-2370

BUILDING PERMIT AUTHORITY

ENFORCING AGENCY	BUILDING OFFICIAL NAME	TELEPHONE NUMBER (Include Area Code)
MI Bureau of Construction Codes-Plumbing Division	Mr. Peter Ingalls	(517) 241-9330

ADDRESS	CITY	STATE	ZIP CODE	FAX NUMBER (Include Area Code)
P. O. Box 30255	Lansing	MI	48909	(517) 241-9308

SUMMARY OF APPEAL

CODE UNDER WHICH APPEAL IS SOUGHT
☐ Building (141) ☐ Electrical (116) ☐ Mechanical (131) ☑ Plumbing (99)

CODE SECTION(S)
MPC, Section 403.1

DESIRED RELIEF (State Briefly)
Be allowed to include fixtures in public rest rooms in adjacent buildings, if within 500 feet of a main Stadium entrance.

BASIS OF APPEAL (State Briefly)
1. Site plan showing distance from Stadium.
2. Floor plans of adjacent buildings.
3. Testimony of Athletic Director.

Provide copies of the following as appropriate (see instructions for number of copies):
- ☑ Statement of Facts and Reasoning
- ☑ Copy of Enforcing Agency Determination
- ☑ Supporting Material
- ☐ Copy of Decision of Local Board of Appeals
- ☐ Transcript of Local Board of Appeals Hearing

APPLICANT (Note: All correspondence will be sent to this address)

NAME OF COMPANY	APPLICANT NAME	FEIN OR SS NO.* (Required)
URS Corporation	Ralph W. Moxley	[redacted]

ADDRESS	CITY	STATE	ZIP CODE	TELEPHONE NUMBER (Include Area Code)
3950 Sparks Drive SE	Grand Rapids	MI	49546	(616) 574-8384

APPLICANT SIGNATURE (Must be an original signature)	DATE	FAX NUMBER (Include Area Code)
		(616) 574-8542

*This information is confidential. Disclosure of confidential information is protected by the Federal Privacy Act.

URS

November 28, 2011
12943158 (Grandparent 12943151)

Mr. Robert Konyndyk, Plumbing Division Director
MI Dept. of Licensing and Regulatory Affairs
Bureau of Construction Codes
Plan Review Division
2501 Woodlake Circle
Okemos, MI 48864

RE: **Greenville Public Schools - Greenville High School Football Stadium**
Application for Construction Code Appeal
BCC File Number: 100532

Dear Mr. Konyndyk:

URS is applying for a Construction Code Appeal for the proposed new Greenville High School Football Stadium. We are appealing the Plumbing Code review that we recently received in a letter from BCC dated November 7, 2011.

In the review letter, Mr. Peter Ingalls cited the 2009 Michigan Plumbing Code, Section 403.1:

"Note based on a Use Group of A-5 and Stadium occupancy of 3,974, you shall provide the following minimum male and female fixtures. Male: 25 water closets and 10 lavatories. Female: 47 water closets and 14 lavatories. Please note that you are short one lavatory for minimum male fixture count, and 19 water closets and five lavatories for minimum female fixture count. Note only the fixtures in the south men's and women's, and the north men's and women's will be counted."

URS is filing this appeal to the MI Plumbing Board based on the following key reasons:

1. We are counting restrooms located within existing Greenville Public School buildings that are within 500 ft. of a major Stadium entrance. This is based upon past successful appeals to the MI Plumbing Board for similar new stadiums constructed in Michigan (i.e. Grand Haven, Farmington and East Grand Rapids). Please note that we are only counting those restrooms that meet the 500 foot radius requirement, and not all restrooms in the adjacent buildings. We are counting public restrooms only, no locker room fixtures, and no private restroom fixtures.

2. We have documentation from the Owner that the Football game spectators are not split 50% men to 50% women. We are finding that far more men are attending the Friday night games than women. The ratio is closer to two to one, men to women.

I have included with this letter an overall site map that shows the new Stadium and surrounding buildings. We have overlaid two (2) 500 foot radius lines, with each one centered on a major entrance ticket booth. The north booth is the diamond shaped space near the Middle School parking lot. The southeast ticket booth is an existing structure and is located near the bus drop-off lanes.

The following five (5) buildings have been counted in our plumbing fixture total:

1. **North Athletic Building:** This is a new building and is located at the north end zone of the Stadium. Included within this structure are the two (2) major public restrooms on the upper level and the locker rooms on the lower level. We are only counting the upper level restrooms as part of the total because those are the fixtures that the public will be able to use. A plan of this new building is included.

URS Corporation
3950 Sparks Drive, SE
Grand Rapids, MI 49546
Tel: 616.574.8500
Fax: 616.574.8542

2. **South Athletic Building:** This is part of the existing Yellow Jacket Stadium, which is immediately south of the new Football Stadium. This building will be accessible to the public during football games. A plan of this existing building is included.

3. **Greenville Middle School:** This is an existing building located north of the new Stadium, and is separated by a small parking lot. We have included only the public restrooms that serve the athletic and band wing of the building. A plan is included (restrooms are highlighted). The distance from the new north ticket booth is approximately 400 feet.

4. **Greenville High School:** This is an existing building that is south and east of the new Stadium. Distance from the existing southeast ticket booth to restrooms inside the north entrance of the High School is approximately 430 feet to the center of the restrooms (using sidewalks, with no shortcuts).

5. **Tennis Complex Restroom Building:** This existing building is located southwest of the new Stadium. Walking distance to the south entrance gates for the new Stadium is 350 feet. Plans are not available from Owner. However, there are two (2) WCs for men and the same for women.

Minimum Plumbing Fixture Requirements (based upon the 2009 Michigan Plumbing Code, Table 403.1)

Based upon a total number of seats (including the Band seating and the Press Box occupants) of **3,974**, a Use Group of A5, and a 50/50 split of men to women, we need to provide the following plumbing fixtures:

1. Male water closets: 25 (one per 75 for first 1500, the 1 per 120 for the balance)
2. Male lavatories: 10 (one per 200)
3. Female water closets: 46 (one per 40 for first 1500, then one per 60 for the balance)
4. Female lavatories: 14 (one per 150)
5. Drinking fountains: 5

Plumbing Fixtures to be provided in new Stadium and nearby school buildings:

1. **North Athletic Building (new)**
   a. Male water closets: 22
   b. Female water closets: 21
   c. Male lavatories: 6
   d. Female lavatories: 6
   e. Drinking fountains: 4

2. **South Athletic Building (existing)**
   a. Male water closets: 5
   b. Female water closets: 6
   c. Male lavatories: 3
   d. Female lavatories: 3
   e. Drinking fountains: 2

3. **Middle School (existing)**
   a. Male water closets: 5
   b. Female water closets: 5
   c. Male lavatories: 2
   d. Female lavatories: 2

4. **High School (existing)**
   a. Male water closets: 7
   b. Female water closets: 11
   c. Male lavatories: 4
   d. Female lavatories: 6
   e. Drinking fountains: 2

5. **Tennis Complex Restroom Building (existing)**
   a. Male water closets: 2
   b. Female water closets: 2
   c. Male lavatories: 2
   d. Female lavatories: 2

Total plumbing fixtures provided:
   a. Male water closets: 41 (16 more than required)
   b. Female water closets: 45 (1 less than required)
   c. Male lavatories: 17 (7 more than required)
   d. Female lavatories: 19 (5 more than required)
   e. Drinking fountains: 8 (3 more than required)

With the single exception of female water closets, we have met or exceeded the plumbing fixture requirements of the 2009 MPC.

Male vs. Female Attendance at Greenville Football Games
In early October, I requested that the Greenville Athletic Department conduct a headcount at two (2) of the football games to verify our suspicion that men were attending these events in far greater numbers than women.

The attached letter from the Athletic Director, Mr. Brian Zdanowski, confirmed our thinking on this key issue. He found that at the October 14 game 64% of the attendees were men and 36% were women. He checked attendance again on October 20 and found 57% were men and 43% were women.

The basic assumption that the split between men and women is equal simply is not true in the case of Greenville High School football games. I had first suspected this when I attended an East Grand Rapids football game at a stadium that we designed about four years ago and discovered during half-time that the

line-up for the Men's restroom far longer than the Women's restroom. Far more men are in attendance at these football games than women.

I propose that the more realistic split between sexes is about 60% men and 40% women. In our case, that would mean that we would only need 27.4 water closets for men and 39.0 water closets for women. Since we already have 45 water closets available for women in the Stadium and nearby buildings, we should have adequate fixtures to meet their needs even at large attendance games.

Summary
Use of nearby school buildings will allow for adequate fixture counts. In addition, the Owner is prepared to provide all attendees with a map showing where the nearby restrooms are located. They will also post signs at each building directing the attendees to the correct door for finding the restroom at that building. They will also make certain that the doors are unlocked and the public can use the facilities during the football games. The Athletic Director is prepared attest to those statements at the Plumbing Board hearing. He will also confirm his findings on the attendance of men vs. women at the football games.

Feel free to call me at 616-574-8384 if you have any questions or concerns with our response.

Sincerely,

URS Corporation

Ralph W. Moxley, AIA, REFP, LEED® AP+
Senior Project Manager

RWM/jc
Enclosures

cc: Greenville Public Schools - Pete Haines, Brian Zdanowski
Clark Construction - Marty Schultz

GREENVILLE ATHLETIC DEPARTMENT

111 Hillcrest • Greenville, MI 48838

Brian Zdanowski, Director of Athletics

Phone (616) 754-4261
FAX (616) 225-1010

November 22, 2011

URS Corporation
Ralph Moxley, AIA, LEED AP
Project Manager
3950 Sparks Drive
Grand Rapids, MI 49546

Dear Ralph,

I have gathered the attendance numbers from our last two home football games for you. One was a varsity game, the other a freshman/JV doubleheader. My ticket-takers used tally counters to account for all people who attended these contests, regardless if they paid or not. This should be a complete picture of what our total attendance looks like.

The varsity game on 10/14/2011 versus Lowell had 2624 males and 1477 females in attendance for a 64/36 percent split.

The freshmen/JV doubleheader on 10/20/2011 versus Northview had 219 males and 166 females in attendance for a 57/43 percent split.

I hope this is the info that you are looking for. Please do not hesitate to contact me with any additional questions.

Cordially,

Brian M. Zdanowski
Athletic Director
Greenville High School

MICHIGAN STATE PLUMBING BOARD
BUREAU OF CONSTRUCTION CODES
2501 Woodlake Circle
Okemos, Michigan 48864

Appeal Docket No.
CCC-PLBG-12-003

Petitioner, Mr. Ralph W. Moxley, URS Corporation, 3950 Sparks Drive, Grand Rapids, Michigan 49546 for Greenville Public Schools – High School Stadium, 111 N. Hillcrest, Greenville, Michigan.

vs

Respondent, Michigan Department of Licensing and Regulatory Affairs, Bureau of Construction Codes

NOTICE OF HEARING

Date: February 28, 2012
Time: The meeting begins at 10:00 a.m. Eastern Standard Time
Location: 2501 Woodlake Circle, Conference Room #3, Okemos, Michigan

Pursuant to the authority contained in Section 16 of 1972 PA 230, the Stille-DeRossett-Hale Single State Construction Code Act (MCLA 125.1516).

A Hearing will be held in response to the request of Mr. Ralph W. Moxley, URS Corporation, 3950 Sparks Drive, Grand Rapids, Michigan 49546 for Greenville Public Schools – High School Stadium, 111 N. Hillcrest, Greenville, Michigan from the requirements of Sections 403.1 of the Michigan Plumbing Code.

Exhibits:

Exhibit A Copy of the application received from Mr. Moxley dated November 28, 2011.

MICHIGAN STATE PLUMBING BOARD

Robert G. Konyndyk, Chief of Plumbing Division

Dec. 27, 2011
Date

RICK SNYDER
GOVERNOR

STATE OF MICHIGAN
DEPARTMENT OF LICENSING AND REGULATORY AFFAIRS
BUREAU OF CONSTRUCTION CODES
IRVIN J. POKE
DIRECTOR

STEVEN H. HILFINGER
DIRECTOR

December 27, 2011

Mr. Ralph W. Moxley
URS Corporation
3950 Sparks Drive
Grand Rapids, Michigan 49546

Dear Mr. Moxley:

Attached is a Notice of Hearing regarding an appeal from the requirements of Sections 403.1, of the Michigan Plumbing Code, for Greenville Public Schools – High School Stadium, 111 N. Hillcrest, Greenville, Michigan, CCC-PLBG-12-003.

This hearing is in response to your request to appeal for relief from the requirements of the above referenced code section.

Please be prepared to address the board's concerns and provide any information which will aid in their decision. Additionally, please provide answers to the following inquires in writing to my office at least three weeks prior to the scheduled hearing.

1. What is the occupancy number of the stadium seating?
2. What is the status of construction?
3. Provide copies of all correspondence regarding plan review for this project.
4. Provide documentation signed by the school administrator that the facilities you are offering as an alternative will be available to stadium occupants at all times during the event.

If you have any further questions prior to the meeting, please contact me at (517) 241-9330.

Sincerely,

Robert G. Konyndyk, Chief
Plumbing Division

RGK/jll

URS

February 3, 2012
12943158 (Grandparent 12943151)

Mr. Robert Konyndyk, Plumbing Division Director
MI Dept. of Licensing and Regulatory Affairs
Bureau of Construction Codes
Plan Review Division
2501 Woodlake Circle
Okemos, MI 48864

RE: **Greenville Public Schools - Greenville High School Football Stadium**
Application for Construction Code Appeal
BCC File Number: 100532

Dear Mr. Konyndyk:

Thank you for scheduling a hearing with the MI Plumbing Board for the appeal from the requirements of Sections 403.1 of the Michigan Plumbing Code. We look forward to presenting our facts to the MI Plumbing Board, and answering any questions they may have on February 28, 2012.

Joining me for this important hearing will be Mr. Pete Haines, Superintendent for Greenville Public Schools, and Mr. Brian Zdanowski, Athletic Director for Greenville Public Schools. We will make every attempt to be as brief and concise as we can, as I am sure you have a full schedule that day. I shall bring enlarged graphics to better present all of the pertinent facts to the MI Plumbing Board.

In response to your four key questions, we offer the following responses:

1. **What is the occupancy number of the Stadium seating?**
   We have designed stadium bleacher seating for 3,866 occupants, including the home seats, visitor seats, and band seats at the south end zone. We are also counting approximately 108 staff or volunteers that will occupy the Concessions Room, the Press Box, and the Ticket Booths. The total Stadium occupancy count is approximately **3,974**. We have not counted the football team players or coaches, as they can use the locker room facilities at the lower level locker room facilities of the new North Athletic Building.

2. **What is the status of construction?**
   Construction is well underway. The new North Athletic Building, which contains the restrooms and Concessions, was started in mid-October, 2011. The foundations are now complete. CMU exterior and interior walls are installed on the lower level, and exterior CMU walls are installed at the upper level. The precast floor deck has been set in place at the second level. No underground plumbing has been installed, and will not be until we have BCC approval for plumbing work. Our goal is to complete all building construction by early June. All field work and punch-list work is to be completed by August 1, 2012.

3. **Provide copies of all correspondence regarding plan review for this project.**
   All correspondence with Michigan Bureau of Construction Codes is attached in chronological order. We have included all correspondence that we have had with Mr. Stanley Skopek, site plan reviewer. He has been very concerned about the height of the four light towers, and whether or not we had FAA approval. We recently received FAA approval and have sent that on to Mr. Skopek. We hope to hear final site approval in the coming week.

URS Corporation
3950 Sparks Drive, SE
Grand Rapids, MI 49546
Tel: 616.574.8500
Fax: 616.574.8542

URS

4. **Provide documentation signed by the school administrator that the facilities you are offering as an alternative will be available to stadium occupants at all times during the event.**
   Please see the attached letter provided by Mr. Pete Haines, Superintendent of Greenville Public Schools. He has addressed which nearby school facilities will be open to the public during football games. He has addressed the key issue of signage that will be carefully placed to direct game attendees to those nearby restroom facilities. He has also addressed the issue of who will unlock school and restroom doors and turn on lights for the public so that they have complete, unhindered access to the nearby public restrooms.

Please feel free to call me at 616-574-8384 if you have any questions or concerns with our response to your questions. Again, we look forward to meeting with your Board on February 29 at 10:00 a.m.

Sincerely,

URS Corporation

Ralph W. Moxley, AIA, REFP, LEED® AP+
Senior Project Manager

RWM/jc
Enclosures

cc: Greenville Public Schools - Pete Haines, Brian Zdanowski
Clark Construction - Marty Schultz

Application for Construction Code Appeal

Michigan Department of Licensing and Regulatory Affairs
Bureau of Construction Codes
P.O. Box 30255, Lansing, MI 48909
517-241-9328
www.michigan.gov/bcc

Agency Use Only: CBP-PLBG-12-004

Application Fee: $500.00

Authority: 1972 PA 230
Completion: Voluntary
Penalty: Appeal will not be heard

LARA is an equal opportunity employer/program. Auxiliary aids, services and other reasonable accommodations are available upon request to individuals with disabilities

Note: The applicant is responsible for all fees applicable to this application.

FACILITY INFORMATION

FACILITY NAME	ADDRESS
MDOT Brighton Garage	10102 East Grand River Avenue

NAME OF CITY, VILLAGE OR TOWNSHIP IN WHICH FACILITY IS LOCATED

☑ City ☐ Village ☐ Township Of: Brighton

COUNTY: Livingston

BUILDING DATA

GROSS FLOOR AREA

☐ New Building _____ ☐ Addition _____ ☐ Alteration _____ ☐ Repair _____

CLASSIFICATION PER BUILDING CODE

Building Use S1 Construction Type V-B No. of Occupants 0 Area/Floor 7200 No. of Floors 1

PERMIT HOLDER

NAME (Company or Individual)	CONTACT PERSON	TELEPHONE NUMBER (Include Area Code)
MDOT	William R. Hoop	(517) 373-7413

ADDRESS	CITY	STATE	ZIP CODE	FAX NUMBER (Include Area Code)
425 West Ottawa	Lansing	MI	48909	(517) 241-4444

BUILDING OWNER

NAME (Company or Individual)	CONTACT PERSON	TELEPHONE NUMBER (Include Area Code)
MDOT Brighton Garage	Matt Pratt	(810) 229-4250

ADDRESS	CITY	STATE	ZIP CODE	FAX NUMBER (Include Area Code)
10102 East Grand River Avenue	Brighton	MI	48116	(810) 229-7295

BUILDING PERMIT AUTHORITY

ENFORCING AGENCY	BUILDING OFFICIAL NAME	TELEPHONE NUMBER (Include Area Code)
Bureau of Const. Codes - Plumbing Division	Robert Konyndyk	(517) 241-9330

ADDRESS	CITY	STATE	ZIP CODE	FAX NUMBER (Include Area Code)
PO Box 30254	Lansing	MI	48909	

SUMMARY OF APPEAL

CODE UNDER WHICH APPEAL IS SOUGHT

☐ Building (141) ☐ Electrical (116) ☐ Mechanical (131) ☑ Plumbing (99)

CODE SECTION(S)

Sections: 701.2, 901.2.1, 1002.1, 1002.4, 1003.1

DESIRED RELIEF (State Briefly)

Installation of outdoor underground storage tank for heated storage building waste water.

BASIS OF APPEAL (State Briefly)

The logistics of tying into the public system and the lack of space at the facility for private system require MDOT to install an underground storage tank for the building waste water.

Provide copies of the following as appropriate (see instructions for number of copies):

- ☐ Statement of Facts and Reasoning
- ☐ Copy of Enforcing Agency Determination
- ☐ Supporting Material
- ☐ Copy of Decision of Local Board of Appeals
- ☐ Transcript of Local Board of Appeals Hearing

APPLICANT (Note: All correspondence will be sent to this address)

NAME OF COMPANY	APPLICANT NAME	FEIN OR SS NO.* (Required)
MDOT	William Hoop	[redacted]

ADDRESS	CITY	STATE	ZIP CODE	TELEPHONE NUMBER (Include Area Code)
425 West Ottawa	Lansing	MI	48909	(517) 373-7413

APPLICANT SIGNATURE (Must be an original signature)	DATE	FAX NUMBER (Include Area Code)
William R Hoop	11/29/2011	

BCC-972 (Rev. 4/11) Front

*This information is confidential. Disclosure of confidential information is protected by the Federal Privacy Act.

Instructions for Application for Construction Code Appeal

Facility Information: Provide all information requested.

Building Data: Provide all information requested from the building permit or plan review.

Permit Holder: Provide the information requested for the entity named on the permit.

Building Owner: Provide the information requested for the entity that owns the building, which is the subject of the appeal.

Building Permit Authority: Provide all information requested for the enforcing agency.

Summary of Appeal: Code; provide the code under which an appeal is sought. Code Section(s); provide the code section(s) that are the subject of the appeal. Desired Relief; describe the remedy being sought. Basis of Appeal; provide a brief statement why the requested remedy should be granted. Provide Copies; provide copies of the documents as listed below:

Building Code - **8** copies
Electrical Code - **15** copies
Mechanical Code - **18** copies
Plumbing Code - **11** copies

Applicant: Provide all information requested.

Note: If the decision being appealed is that of a local Board of Appeals, this application and the filing fee must be received in our office within 10 business days of the filing of the decision of the local board of appeals in accordance with Section 16 of 1972 PA 230.

U.S. Postal Service
MI Dept. of Licensing and Regulatory Affairs
Bureau of Construction Codes
(Address to appropriate division-Electrical Division, Mechanical Division or Plumbing Division
Please address Building appeals to Plan Review Division)
P.O. Box 30255
7150 Harris Drive
Lansing, MI 48909

Courier Other Than U.S. Postal Service
MI Dept. of Licensing and Regulatory Affairs
Bureau of Construction Codes
(Address to appropriate division-Electrical Division, Mechanical Division or Plumbing Division
Please address Building appeals to Plan Review Division)
2501 Woodlake Circle
Okemos, MI 48864

Validation Area

Konyndyk, Bob (LARA)

From: Hoop, William (MDOT)
Sent: Thursday, December 01, 2011 4:54 PM
To: Konyndyk, Bob (LARA)
Subject: Submittal
Attachments: Letter to Plumbing Board on 12-1.pdf; comment_Letter_STD_98018.doc

Mr. Konyndyk, MDOT submitted an application for Construction Code Appeal yesterday for a project at the MDOT Brighton Garage. We are seeking to obtain a variance for the installation of an underground storage tank for the building waste water.
My student was told that I needed to send a cover letter for the project. I attached a copy of the letter that I wrote today and it is page 1 of the attachment. I also attached the cover letter I included yesterday and a copy of the application. I have included a second attachment which is the comment letter from Plan Review.
A signed hard copy has been delivered to your office.
If you need anything else please let me know.
I look forward to meeting you on December 13.

William R. Hoop
MDOT
Office of Operations Administrative Services
Facilities Administration and Operations
Engineering Manager - Licensed
Desk Phone - 517-373-7413
Cell Phone - 517-388-5471
Fax - 517-241-4444

MICHIGAN STATE PLUMBING BOARD
BUREAU OF CONSTRUCTION CODES
2501 Woodlake Circle
Okemos, Michigan 48864

Appeal Docket No.
CCC-PLBG-12-004

Petitioner, Mr. William R. Hoop, MDOT, 425 West Ottawa, Lansing, Michigan 48909 for MDOT Brighton Garage, 10102 East Grand River Avenue, Brighton, Michigan.

vs

Respondent, Michigan Department of Licensing and Regulatory Affairs, Bureau of Construction Codes

NOTICE OF HEARING

Date: February 28, 2012
Time: The meeting begins at 10:00 a.m. Eastern Standard Time
Location: 2501 Woodlake Circle, Conference Room #3, Okemos, Michigan

Pursuant to the authority contained in Section 16 of 1972 PA 230, the Stille-DeRossett-Hale Single State Construction Code Act (MCLA 125.1516).

A Hearing will be held in response to the request of Mr. William R. Hoop, MDOT, 425 West Ottawa, Lansing, Michigan 48909 for MDOT Brighton Garage, 10102 East Grand River Avenue, Brighton, Michigan from the requirements of Sections 701.2 of the Michigan Plumbing Code.

Exhibits:

Exhibit A Copy of the application received from Mr. Hoop dated November 29, 2011.

MICHIGAN STATE PLUMBING BOARD

Robert G. Konyndyk, Chief of Plumbing Division

1-10-12
Date

RICK SNYDER
GOVERNOR

STATE OF MICHIGAN
DEPARTMENT OF LICENSING AND REGULATORY AFFAIRS
BUREAU OF CONSTRUCTION CODES
IRVIN J. POKE
DIRECTOR

STEVEN H. HILFINGER
DIRECTOR

January 11, 2012

Mr. William R. Hoop
MDOT
425 West Ottawa
Lansing, Michigan 48909

Dear Mr. Hoop:

Attached is a Notice of Hearing regarding an appeal from the requirements of Sections 701.2, of the Michigan Plumbing Code, for MDOT Brighton Garage, 10102 East Grand River Avenue, Brighton, Michigan, CCC-PLBG-12-004.

This hearing is in response to your request to appeal for relief from the requirements of the above referenced code section.

Please be prepared to address the board's concerns and provide any information which will aid in their decision. Additionally, please provide answers to the following inquires in writing to my office at least three weeks prior to the scheduled hearing.

1. What is the status of construction?
2. Detail in writing how items 2, 3, and 4 of the Bureau's plan review letter dated May 16, 2011 have been addressed.
3. Provide detail on the alarm notification and volume controls related to the tank capacities.

If you have any further questions prior to the meeting, please contact me at (517) 241-9330.

Sincerely,

Robert G. Konyndyk, Chief
Plumbing Division

RGK/sjl

RICK SNYDER
GOVERNOR

STATE OF MICHIGAN
DEPARTMENT OF LICENSING AND REGULATORY AFFAIRS
LANSING

STEVEN H. HILFINGER
DIRECTOR

May 16, 2011

Mr. William Hoop
Dept of Transportation
Facilities Administration and Operations
425 W Ottawa PO Box 30050
Lansing, MI 48909

RE: Project Number: 98018 - Livingston
Arch. Project Number: N/A
Brighton Maintenance Garage
10102 E Grand River Avenue
Brighton, MI
Description: Install Underground Storage Tank

Use Group: S1
Construction Type: VB
Square Footage: Alt 800

Dear Mr. Hoop:

This project has been reviewed for compliance with the State of Michigan Construction Code.

2009 Michigan Plumbing Code - Peter Ingalls

1. MPC, Section 701.2 - Every building in which plumbing fixtures are installed and all premises having drainage piping shall be connected to a public sewer, where available, or an approved private sewage disposal system.

   Note a storage tank is not an approved means of disposal.

2. MPC, Section 901.2.1 - Every trap and trapped fixture shall be vented in accordance with one of the venting methods specified in Chapter 9 of the code.

   See trench drains.

3. MPC, Section 1002.1 - Each plumbing fixture shall be separately trapped by a liquid-seal trap, except as otherwise permitted by the code.

   See trench drains.

4. MPC, Section 1002.4 - Where a trap seal is subjected to loss by evaporation, a trap seal primer valve shall be installed.

LARA is an equal opportunity employer/program.
Auxiliary aids, services and other reasonable accommodations are available upon request to individuals with disabilities.

See trench drains.

5. MPC, Section 1003.1 - Interceptors and separators shall be provided to prevent the discharge of oil, grease, sand, and other substances harmful or hazardous to the building drainage system, the public sewer, the private sewage disposal system or the sewage treatment plant or processes.

   See trench drains.

2009 Michigan Mechanical Code - Kevin Matteson

It appears that there is no mechanical work being done please submit mechanical plans or request that mechanical review be closed.

Upon receipt of 2 complete set(s) of revised plans responding to the Plumbing, Mechanical code(s) plan review comments noted herein, the plan review approval will be forwarded.

If you have any questions regarding your plan review, please contact our office at (517) 241-9328.

Sincerely,

Signed and Filed on: May 16, 2011

Kevin Matteson, Plan Reviewer
KM/mt

cc: BCC - Plumbing, Mechanical Division(s)
Dept of Transportation, William Hoop

RICK SNYDER
GOVERNOR

STATE OF MICHIGAN
DEPARTMENT OF TRANSPORTATION
LANSING

KIRK T. STEUDLE
DIRECTOR

November 22, 2011

Mr. Robert Konydyk, Chief
Bureau of Construction Codes
Plumbing Division
Michigan Department of Licensing and Regulatory Affairs
P.O. Box 30254
Lansing, Michigan 48909

Re: Underground Storage Tank - Brighton Maintenance Garage – MDOT
Brighton, Michigan 48116, Livingston County

Dear Mr. Konydyk:

Enclosed is the Application for Construction Code Appeal for the Brighton underground storage tank. Please mail all future correspondence (excluding interagency billings) to the following address:

Mr. William Hoop, Engineer Manager
Office of Operations Administrative Services
Facilities Administration & Operations
Michigan Department of Transportation
P.O. Box 30050
Lansing, Michigan 48909

Reference the following when sending interagency billings:

Agency	Index	Project	Phase	AG3
591	56600			

If you have any questions or need additional information, please feel free to contact me at (517) 373-7413.

Sincerely,

William Hoop

William Hoop, Engineer Manager
Office of Operations Administrative Services
Facilities Administration & Operations

Enclosures

Petition Application for Approval of Material, Product or Method
Michigan Department of Energy, Labor & Economic Growth
Bureau of Construction Codes
P.O. Box 30255, Lansing, MI 48909
www.michigan.gov/bcc

Agency Use Only
BCCP-11-001
$500 10/05/10

Application Fee: $500.00

Authority: 1972 PA 230
Completion: Mandatory
Penalty: Use of material, product or method will not be approved

DELEG is an equal opportunity employer/program. Auxiliary aids, services and other reasonable accommodations are available upon request to individuals with disabilities.

PRODUCT INFORMATION

NATURE OF APPLICATION

☐ Material ☑ Product ☐ Method of Manufacture or Construction ☐ Component

CODE UNDER WHICH APPROVAL IS SOUGHT

☐ Building (140) ☐ Electrical (115) ☐ Mechanical (130) ☑ Plumbing (98)

NAME OF MATERIAL, PRODUCT OR METHOD OF MANUFACTURE (Limit To One Item Per Application)

Highland Tank Elevator Sump Pump (ESP) Filter Systems

OTHER IDENTIFICATION (Model Number)

Highland Tank HT-M7 Filter Unity with Pump and Control System

DESCRIPTION (Use Additional Sheets If Necessary)

ESP Filter Systems recover harmful oil spill or discharges from hydraulic elevator sumps whenever the sumps are drained by a self activating pump.

INTENDED USE (Use Additional Sheets If Necessary)

ESP filters are used in applications where strict water quality discharge regulations are mandated and help prevent harmful petroleum products from being discharged to the sanitary or storm sewers in compliance with regulations.

DATA SUBMITTED

☑ Letter
☑ Manual
☐ Standards
☐ Installation Instructions
☑ Display Catalog

Reports
☐ ICC - NES
☐ BOCA - NES
☐ ICBO
☐ SBCC
☐ NRB
☐ Other

☐ Product Sample or Model
☐ Prior Approvals by Other Agencies
☐ Recommendations by Model Code Bodies

LABORATORY TEST BY

Geochemical Testing (attached)

PILOT SERVICE EXPERIENCE AND CONDITIONS (Use Additional Sheets If Necessary)

Installations around the USA - approximately 75 units.

Tran Info:98 16261422-1 10/05/10
Chk#: 148345 Amt: $500.00
ID: HIGHLAND TANK & MANUFACTURING CO

RESTRICTIONS FOR USE (Use Additional Sheets If Necessary)

System designed to remove hydraulic oil from water.

APPLICANT (Note: All correspondence will be sent to this address)

NAME OF COMPANY	APPLICANT NAME
Highland Tank & Manufacturing Company	Tom Schoendorf

ADDRESS: One Highland Rd

CITY	STATE	ZIP CODE	TELEPHONE NUMBER (Include Area Code)
Stoystown	PA	15563	(814) 895-5701

APPLICANT SIGNATURE (Must be an original signature)	DATE	FAX NUMBER (Include Area Code)
Tom Schoendorf	9/17/10	(814) 893-6126

BCC 247 (Rev. 9/09) Front

9/17/10 [redacted] ORIGINAL SUBMISSION
11/23/10 [redacted] SECOND SUB.
10/14/11 [redacted] THIRD SUB.

Advanced Filtration Systems Elevator Sump Pump (ESP) Filter System

Highland Tank®
Wastewater Treatment Division

Remove Petroleum Hydrocarbons from Elevator Sump Discharges

Hydraulic oil in an elevator sump is a code violation and dangerous for all personnel working on and around the elevator equipment. This condition also causes damage to the elevator equipment and is a potential contaminant if drained or pumped into the environment. Hydraulic oil will also penetrate concrete, seeping into the ground, requiring an environmental cleanup and removal of all contaminated soils.

Highland Tank Elevator Sump Pump (ESP) Filters recover harmful oil spills or discharges from hydraulic elevator sumps whenever the sumps are drained by a self activating pump. Highland's ESP Filters are used in applications where strict water quality discharge regulations are mandated and help prevent harmful petroleum products from being discharged to the sanitary or storm sewers in compliance with the EPA's sewer pretreatment or storm water programs

The heart of Highland's ESP Filter System is the oleophilic filter cartridge. The patented polymeric surfactant technology used to chemically treat each cartridge gives them the ability to completely remove hydraulic oils from the water prior to discharge. Highland's ESP Filters are so effective, they can even remove hydraulic oil that is mechanically emulsified by high-shear, high RPM elevator sump pumps! And maintenance is easy – simply remove the oily saturated filter cartridges, dispose with the oily rags, and replace with new filters.

Highland ESP Filters

- High impact plastic or stainless steel housings.
- Can be sized to accommodate most pumped flows.
- Simple and easy to install.
- Operate automatically.
- Removes 99.9% free and mechanically emulsified oil
- Easy to maintain.
- Can be retrofitted to existing elevator sump pumps.
- Help avoid environmental contamination and costly fines.

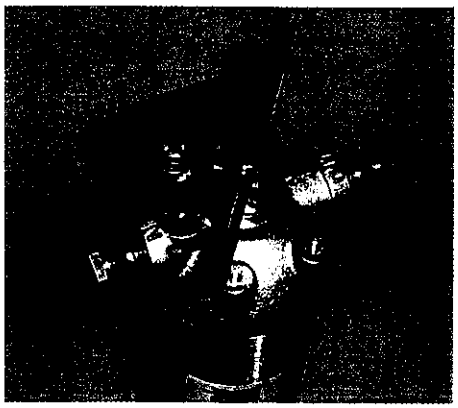

SPECIFICATION FOR HIGHLAND TANK HT-M7 50-GPM ESP FILTER/DISCHARGE PUMP SYSTEM

The Elevator Sump Pump (ESP) discharge protection system for this application shall be designed and specified to prevent discharges of hydraulic oil from elevator sumps under varying oil contamination conditions. System shall use two different forms of protection to account for different levels of oil concentration that may occur from drips or major leaks. With proper verification of system head loss, this pump and filter system will meet the minimum 3000 gph discharge rating required by Texas state regulations.

HIGHLAND HT-M7 Filter Unit

The removal of hydraulic oil from the flow stream shall be through the use of a single 7-Cartridge vessel with Highland Tank Advanced Filtration System (AFS) filter cartridges. The housing shall be a 304 Stainless Steel vessel rated for 150 psi maximum operating pressure and shall include a band-clamp lid closurewtih ¼" air bleeder fitting, low-height legs, ½" fittings with valves for DIRTY and CLEAN side drains, fittings for pressure gauges, two 0-15 psi pressure gauges and 2" MNPT inlet and outlet fittings.

The system shall be provided with a minimum of one set of seven (7) Highland Tank TYPE III AFS filter cartridges. Each cartridge is 2.5" diameter x 40" long and a single pass through the unit shall offer removal of 90% or greater of free and mechanically emulsified hydraulic oils. Approximate pressure loss of 3 psi should be used for the filter unit based on water with only hydraulic oil and water, no solids.

NOTE TO SPECIFIER: Filters discussed above are not specified with particulate filtration. Particulate filtration is a neccessity in most industrial applications to avoid plugging of the AFS cartridges before they reach oil saturation, but as a general rule, this does not apply to elevator pit discharges due to limited flow and very low solids levels. If there is a possibility that significant amounts of 5 micron and larger particles will be present in the flow stream, a particulate filter and revised pump (due to increased pressure loss) can be offered by Highland Tank.

Pump & Control System

The filter unit above shall be supplied with an automatic pump-out control system including the following components:

GOULDS WE0511H Submersible Discharge Pump

The standard system is based on use of a Goulds WE0511H submersible discharge pump to provide 50 gpm of discharge flow capacity at a maximum total head of 24'. This pump includes a standard 1/2 HP, 1PH/60HZ/115V submersible motor with FLA rating of 14.5. Other pumps can be offered for applications with increased static head, particulate filtration, etc.

HIGHLAND LS-HT-1127 Pump Control Sensor

The system shall also include a custom-built sensor with three floats for on/off control of pump and high water alarm signal. The sensor shall also incorporate a conductivity sensor that will be used to detect the presence of an oil layer in the sump and will send a signal to override the pump operation and prevent the possible discharge of pure oil.

This sensor will be field-mounted to the pump discharge piping using clamps provided with the sensor.

HIGHLAND 1410-LGR Control and Alarm Panel

System shall include a NEMA 4X (FRP) control/alarm panel to offer automatic on/off operation of the pump above. The panel shall be UL 508 labeled and offer manual or automatic control of the the discharge pump based on the signals provided from the LS-HT-1127 sensor.

The panel offers local visual indication of high level, pump running and pump run prevented conditions. The standard panel does not include an audible (horn) alarm, but this can be added as needed. The panel does include a Normally Open auxiliary contact for high level that can be tied to a building alarm system if needed.

The standard panel offering is based on the Goulds WE0511H pump above, but custom versions are available to meet almost any requirements.

Highland Tank

Unmatched quality & service

THOMAS C. SCHOENDORF

tschoendorf@highlandtank.com

BCCP-11-001
File Set
mailed to SPB
11-30-10

Date 11-23-10

To: Bob Konyndyke
State of Michigan
PO Box 30254 2501
Woodlake Circle
Lansing, MI 48909

From: Thomas Schoendorf / Division Manager- Wastewater Treatment Systems
Re: Highland Tank & Mfg. Co. Elevator Sump Pit System Approvals

Dear Sir,

Thank you for allowing Highland Tank to submit an application for product approval in the State of Michigan. We would like this letter to serve as an addendum for consideration to the original approval packet that was submitted to your office. Please find the following revised items for review attached:

- ESP System drawing lay-out
- Control Panel drawing lay-out
- ESP System description and operation

If you need anymore information or have any questions please feel free to give me a call at (631) 473-0598 Ext. 2, or our Local Representative- Cindy Zatto with VE Sales at (810) 343-2713.

Sincerely,

Thomas Schoendorf

STATE OF MICHIGAN
JENNIFER M. GRANHOLM
GOVERNOR
DEPARTMENT OF ENERGY, LABOR & ECONOMIC GROWTH
LANSING
ANDREW S. LEVIN
ACTING DIRECTOR

November 24, 2010

TO: Members of the State Plumbing Board

FROM: Robert G. Konyndyk, Chief, Plumbing Division

SUBJECT: Product Approval for Highland Tank & Manufacturing Co., BCCP 11-001

The applicant has requested consideration of a product in order to meet requirements.

APPLICANT REPRESENTATIVE:

Mr. Tom Schoendorf

APPLICANT:

Highland Tank & Manufacturing Co.
One Highland Rd.
Stoystown, PA 15563

AUTHORITY:

Section 21 of 1972 PA 230 being section 125.1521 of the Michigan Compiled Laws.

PRODUCT:

Highland Tank & Manufacturing Co., HT-M7 Filter Unity with Pump and Control System.

APPLICATION:

System designed to remove hydraulic oil from water.

DELEG is an equal opportunity employer/program.
Auxiliary aids, services and other reasonable accommodations are available upon request to individuals with disabilities.

LABORATORY TESTS / LISTING:

None provided.

CONDITIONS OF USE AND INSTALLATION:

1. All requirements of the Michigan Plumbing and Electrical Codes shall be applicable.

2. Installations shall be in accordance with the manufacturer's specifications.

5. An oil separator in hydraulic elevator pits shall also be installed as required by code.

RECOMMENDATION:

Additional information has been requested from the manufacturer.

RGK/mkr

STATE OF MICHIGAN
JENNIFER M. GRANHOLM
GOVERNOR

DEPARTMENT OF ENERGY, LABOR & ECONOMIC GROWTH
LANSING

ANDREW S. LEVIN
ACTING DIRECTOR

November 24, 2010

Mr. Tom Schoendorf
Highland Tank & Manufacturing Co.
One Highland Rd.
Stoystown, PA 15563

Dear Mr. Schoendorf:

The Bureau of Construction Codes, Plumbing Division, has received your Product Approval application for the Highland Tank & Manufacturing Co., HT-M7 Filter Unity with Pump and Control System.

Your request will be scheduled for the State Plumbing Board meeting after we have reviewed your response to this correspondence. If approved by the board, your product will be referred to the Construction Code Commission for final approval. Please call this office for attendance information should you desire to represent the product at the meeting.

Please provide the following information to assist the board in their decision.

1. Provide a recognized test report to confirm the products ability to perform as stated in your submission. The reports shall also address the maximum product absorption limits.
2. Provide a product catalog indicating the various size selections and model numbers.
3. Does the presence of pure oil shut off the pump as stated on your Specification for Highland Tank, page two which states "will send a signal to override the pump operation and prevent the possible discharge of pure oil."
4. The intentions of your approval request are unclear to this agency. Is it your intention that the use of your product would obviate the mandate in the Michigan Plumbing Code, Section 1003.4 which requires an oil separator in hydraulic elevator pits?

Please contact me at 517/241-9330, if you have any further questions in this matter prior to providing the requested information.

Sincerely,

Robert G. Konyndyk, Chief
Plumbing Division

RGK/mkr

DELEG is an equal opportunity employer/program.
Auxiliary aids, services and other reasonable accommodations are available upon request to individuals with disabilities.

STATE OF MICHIGAN
JENNIFER M. GRANHOLM
GOVERNOR

DEPARTMENT OF ENERGY, LABOR & ECONOMIC GROWTH
LANSING

ANDREW S. LEVIN
ACTING DIRECTOR

December 6, 2010

Mr. Tom Schoendorf
Highland Tank & Manufacturing Co.
One Highland Rd.
Stoystown, PA 15563

Dear Mr. Schoendorf:

I am writing to request clarification information following receipt of your product addendum correspondence dated November 23, 2010 which we received in this office November 30, 2010.

You have failed to identify what the changes are in the second documentation set from your original request for the HT-M7 Filter Unity with Pump and Control System. Please be advised that the product request will not be forwarded to the board until we have received the clarification and the November 24, 2010 requested information.

Please contact me at 517/241-9330, if you have any further questions in this matter prior to providing the requested information.

Sincerely,

Robert G. Konyndyk, Chief
Plumbing Division

RGK/mkr

DELEG is an equal opportunity employer/program.
Auxiliary aids, services and other reasonable accommodations are available upon request to individuals with disabilities.

Highland Tank

Unmatched quality & service

THOMAS C. SCHOENDORF

tschoendorf@highlandtank.com

Received December 13, 2011 pm from Cindy Zatto

To: Bob Konyndyke
State of Michigan
PO Box 30254 2501
Woodlake Circle
Lansing, MI 48909

Date 10-14-11

From: Thomas Schoendorf
Division Manager- Wastewater Treatment Systems

Re: Highland Tank & Mfg. Co. Elevator Sump Pit System Approvals

Dear Sir,

Thank you for allowing Highland Tank to submit an application for product approval in the State of Michigan. We would like this letter to serve as a written confirmation to proceed with your review and approval process of the attached revised approval packets and existing application and check on file. Highland Tank is submitting a complete system that will address the oil storage, varying pumping, and effluent requirements that will satisfy all State and local requirements.

If you need anymore information or have any questions at this time, please feel free to give me a call at (631) 473-0598 Ext. 2, or our Local Representative- Cindy Zatto with VE Sales at (810) 343-2713.

Sincerely,

Thomas Schoendorf

Elevator Sump Pump Interceptors

Remove Petroleum Hydrocarbons from Elevator Sump Discharges and Meet new ASME A17.1 Standards for Elevator Safety

Highland Tank®

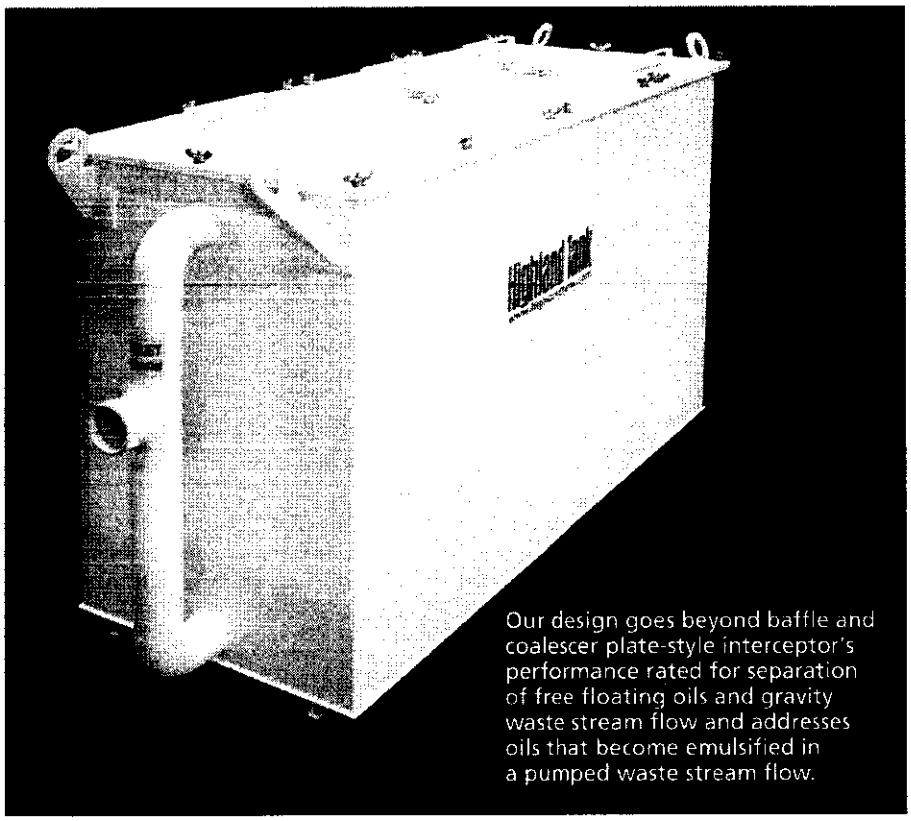

Our design goes beyond baffle and coalescer plate-style interceptor's performance rated for separation of free floating oils and gravity waste stream flow and addresses oils that become emulsified in a pumped waste stream flow.

Hydraulic oil in an elevator sump is a code violation and dangerous for all personnel working on and around the elevator equipment. This condition also causes damage to the elevator equipment and is a potential contaminant if drained or pumped into the environment. Hydraulic oil will also penetrate concrete, seeping into the ground, requiring an environmental cleanup and removal of all contaminated soils.

Highland Tank, Elevator Sump Pump Interceptors (ESP-INT) are designed to trap sediment and retain free floating oil and grease (petroleum hydrocarbons and other volatile liquids) in wastewater discharged from elevator pit sumps. ESP-INTs prevent the discharge of sediment, oil, grease, and other substances harmful or hazardous to the building drainage system, the public sewer, sewage treatment plant or other treatment processes.

Elevator Sump Pump Interceptors are constructed of mild carbon steel and coated with heavy duty polyurethane for superior corrosion resistance. Stainless steel construction is also available. ESP-INTs are suitable for installation above or below grade, and are available in configurations to fit almost any requirement.

General Arrangement

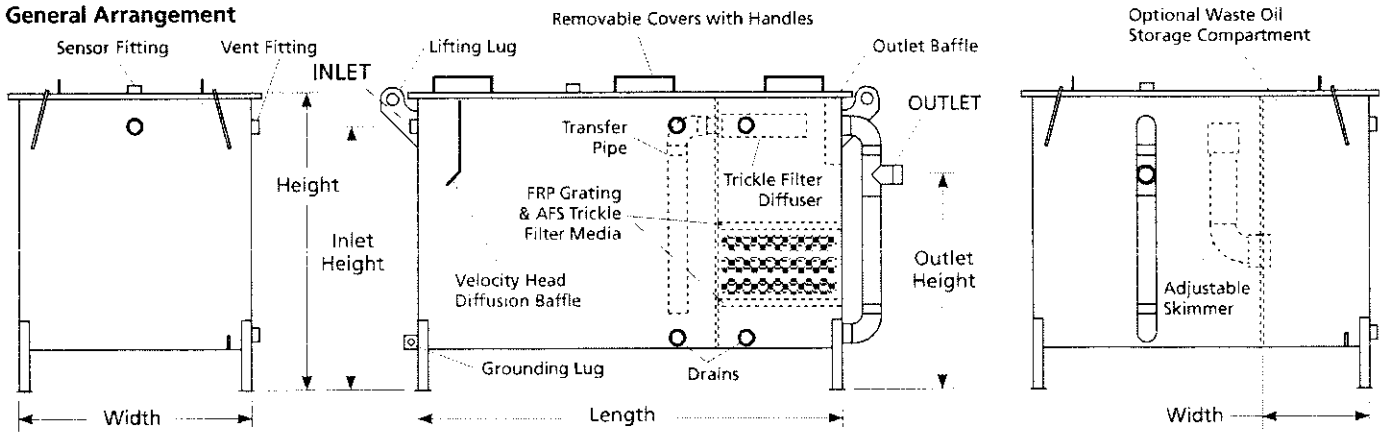

Model	*Flow Rate	Total Volume		Dimensions(Inches)			Inlet/Outlet Diameter	Centerline Inlet/Outlet	Oil Storage Capacity	Waste Oil Storage Compartment	
	Gal/Min	Gallons	Ft.^{3}	Length	Width	Height	NPT	Height	Gallons	Width	Volume
ESP-INT - 50	50	307	41	58	34	42	2"/4"	38"/28"	45	18"	100
ESP-INT - 100	100	572	76.5	78	42	48	3"/4"	44"/30"	53	18"	200
ESP-INT - 150	150	897	120	90	48	51	3"/6"	47"/27"	60	18"	200
ESP-INT - 200	200	1157	154.7	110	48	57	4"/6"	52"/25"	68	18"	300

* Intermittent flow. Note: Vent Connections are 2" or 3" NPT, on outlet end of MOI. Check and advise for local code requirements.

Highland's Elevator Interceptors remove hydraulic oil from sump pump discharge

Typical Above-Floor Installation

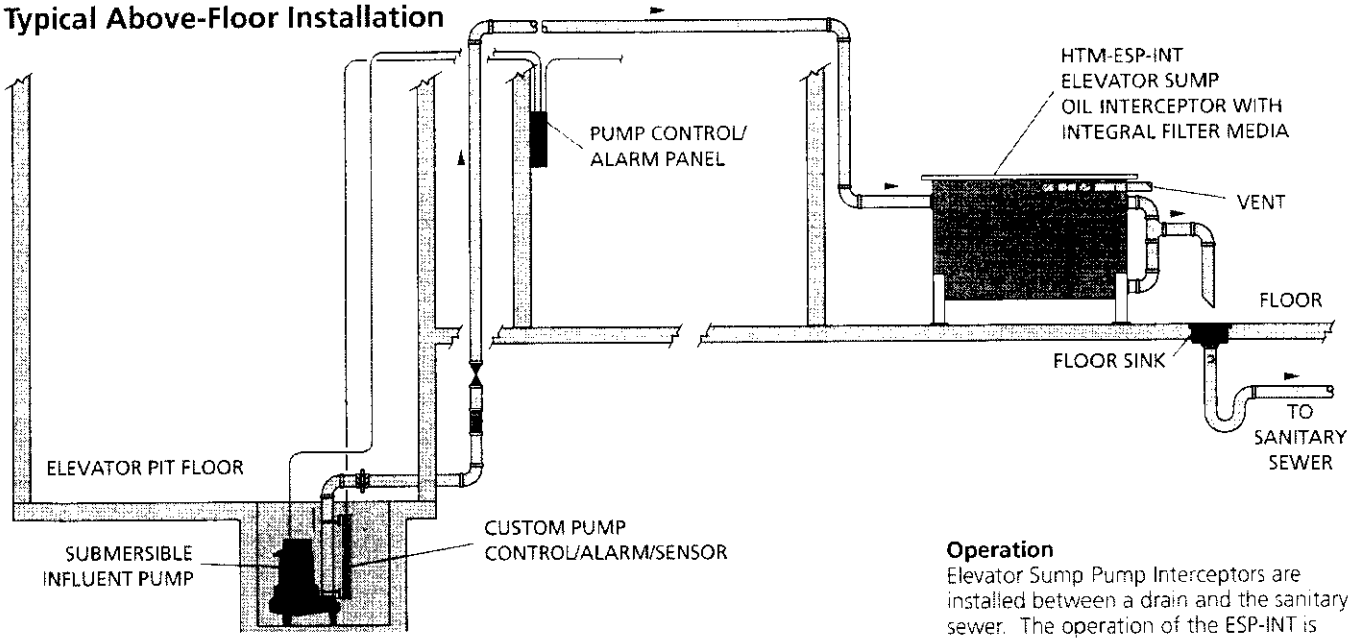

Operation

Elevator Sump Pump Interceptors are installed between a drain and the sanitary sewer. The operation of the ESP-INT is simple. Elevator Sump Pump Interceptors retain wastewater long enough to allow those contaminants with specific gravities different than water, to separate out by gravity flotation and settling. Since oil is lighter than water, the oil floats and can be manually skimmed from the surface of the water in the interceptor. Conversely, solids settle to the bottom and accumulate at the sludge baffle. The accumulating waste oil and solids are periodically removed and or properly disposed of or recycled.

Typical In-Floor Installation

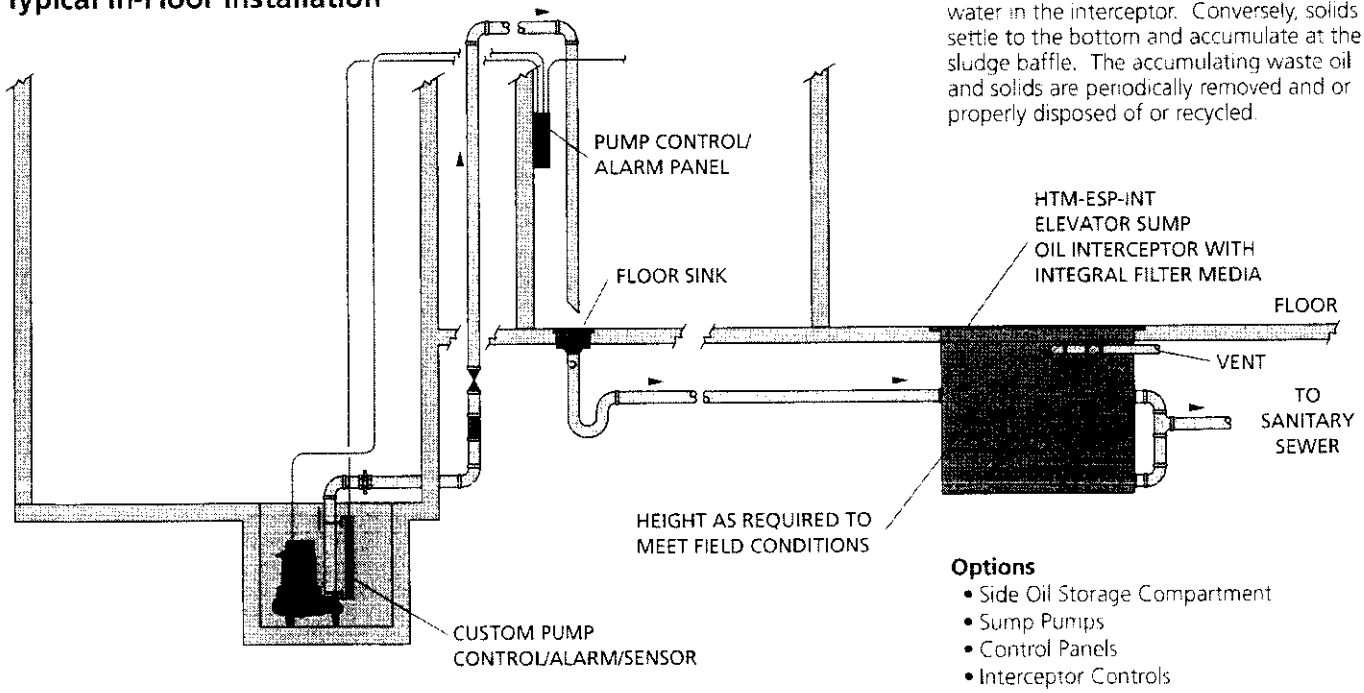

Options

- Side Oil Storage Compartment
- Sump Pumps
- Control Panels
- Interceptor Controls
- Double-walled Construction
- Leak Detection Systems

Please visit us at www.highlandtank.com

HIGHLAND TANK & MFG. CO.

One Highland Road
Stoystown, PA 15563
814-893-5701
FAX 893-6126

99 West Elizabethtown Road
Manheim, PA 17545
717-664-0600
FAX 664-0617

958 19th Street
Watervliet, NY 12189
518-273-0801
FAX 273-1365

2700 Patterson Street
Greensboro, NC 27407
336-218-0801
FAX 218-1292

2225 Chestnut Street
Lebanon, PA 17042
717-664-0602
FAX 664-0631

1510 Stoystown Road
Friedens, PA 15541
814-443-6800
FAX 444-8662

© Highland Tank – HT–2555–12/2011

7. NEW PRODUCTS

Highland Tank & Manufacturing Co., HT-M7 Filter Unity with Pump and Control System - BCCP-11-001

Mr. Konyndyk presented the board a product approval request from Highland Tank & Manufacturing Co., for HT-M7 Filter Unity with Pump and Control System. The applicant has requested to amend their product approval submission. He informed the board that review may take place at the March 1, 2011 board meeting.

RICK SNYDER
GOVERNOR

STATE OF MICHIGAN
DEPARTMENT OF LICENSING AND REGULATORY AFFAIRS
BUREAU OF CONSTRUCTION CODES
IRVIN J. POKE
DIRECTOR

STEVEN H. HILFINGER
DIRECTOR

January 5, 2012

Mr. Tom Schoendorf
Highland Tank & Manufacturing Co.
134 Wedgewood Drive
Coram NY 11727

Dear Mr. Schoendorf:

I am writing to request clarification following receipt of your Product Certification correspondence dated November 14, 2011, received in this office December 13, 2011 from Cindy Zatto.

The recent documentation addressed elevator sump pump interceptors, capacities for 50, 100, 150, and 200 gallons per minute discharges. Brief information regarding pump and control systems were included in the specification sheets.

Your original acceptance application for Highland Tank HT-MT filter Unity with Pump Control System was dated September 17, 2010. We requested specific answers to listed questions in our November 24, 2010 correspondence. A response was not received for those matters. Shortly after that mailing, documents from you were received with attached documentation which you identified as an addendum dated November 23, 2010. I again requested information from earlier letter in correspondence dated December 6, 2010. On January 25, 2011, you requested time to modify and test your system by placing a hold on our approval process. I readily agreed to that request verbally during telephone conversations.

I have strong reservations now concerning the change of consideration from controls to interceptors. Those concerns are amplified by the lack of performance testing submissions, unanswered questions, and clear identification of the products request for our consideration. My intentions are to discuss this matter with the Executive Director of the Bureau of Construction Codes for his direction. Following that discussion, I will inform you how we will proceed with the process.

We take your acceptance request seriously as the industry needs guidance in elevator sump matters. I would further encourage you to seek solutions in code, standards, and product listing matters with nationally recognized agencies.

Sincerely,

Robert G. Konyndyk, Chief
Plumbing Division

RGK/sjl

Highland Tank

Unmatched quality & service

THOMAS C. SCHOENDORF

tschoendorf@highlandtank.com

To: Bob Konyndyk, Chief
Plumbing Division
State of Michigan
PO Box 30254 2501
Woodlake Circle
Lansing, MI 48909

Date 1-27-12

From: Thomas Schoendorf
Division Manager- Wastewater Treatment Systems

Re: Highland Tank & Mfg. Co. Elevator Sump Pit System Approvals

Dear Bob,

Thank you for allowing Highland Tank to submit an application for product approval in the State of Michigan. We would like this letter to serve as a written response to your letter dated January 5, 2012. You were kind enough to allow Highland Tank to put our original application submitted on September 17, 2010 on hold, and the opportunity to come back with a more complete system that we feel will address the oil storage, varying pumping, and effluent requirements.

The system we submitted on November 14, 2011 is called our Manual Oil Interceptor with Trickle Filter option (MOI-TF). The MOI-TF system combines the design of a traditional Manual Oil Interceptor with a state of the art trickle filter that should satisfy all State and local requirements for sizing, oil storage capacity, effluent quality, and required flow rates. The MOI-TF system still includes the pumping and control packages similar to our filter system submitted previously. However, this system also includes a high oil alarm located inside the MOI-TF. Please see the attached specifications and drawings that highlight the Manual Oil Interceptor design and the Trickle filter media bag located inside the last compartment of the tank.

The intent of Highland Tank's performance testing on the MOI-TF for elevator sump pit applications was based on MPC 2009 Chapter 10 with "oil storage" tied to square footage of hydraulic elevator pit covering the most stringent interpretation by plumbing inspectors and plumbing design engineers. Highland Tank's MOI-TF systems will meet the stricter interpretation of oil storage capacity based on sizing for the maximum capacity that could accumulate in the elevator pit. The sizing method used by Highland Tank could potentially eliminate the possibility of a hydraulic oil discharge entering the public sewer system caused by a catastrophic failure of the hydraulic elevator system. Regardless of the interpretation of total volume or oil storage, Highland Tank has applied for approval of this product with performance testing on pumped oily waste that is backed by 3rd party certification for performance in the application now required in Michigan to meet ASME A17.1 Safety Code for Elevators. The intention of State of Michigan product approval would not obviate the need for oil interceptors, but is intended to confirm performance of Highland Tank Manual Oil Interceptor (MOI-TF) for the application as mandated by ASME A17.1 Elevator Safety Code.

Highland Tank

Unmatched quality & service

THOMAS C. SCHOENDORF

tschoendorf@highlandtank.com

If you need anymore information or have any questions at this time, please feel free to give me a call at (631) 473-0598 Ext. 2, or our Local Representative- Cindy Zatto with VE Sales at (810) 343-2713.

Sincerely yours,

Thomas Schoendorf

Petition Application for Approval of Material, Product or Method

Michigan Department of Licensing and Regulatory Affairs
Bureau of Construction Codes
P.O. Box 30255, Lansing, MI 48909
www.michigan.gov/bcc

Agency Use Only: 11-22-11 $500.00

Application Fee: $500.00

Authority 1972 PA 230 Completion Mandatory Penalty Use of material, product or method will not be approved	LARA is an equal opportunity employer/program. Auxiliary aids, services and other reasonable accommodations are available upon request to individuals with disabilities. BCCP 12-002

PRODUCT INFORMATION

NATURE OF APPLICATION

☐ Material ☒ Product ☐ Method of Manufacture or Construction ☐ Component

CODE UNDER WHICH APPROVAL IS SOUGHT

☐ Building (140) ☐ Electrical (115) ☐ Mechanical (130) ☒ Plumbing (98)

NAME OF MATERIAL, PRODUCT OR METHOD OF MANUFACTURE (Limit To One Item Per Application)

Highland Tank protected steel, grease interceptors

OTHER IDENTIFICATION (Model Number)

Highland Tank PGI Series - Large volume grease interceptors

Models: PGI-240 thru PGI-40,000

DESCRIPTION (Use Additional Sheets If Necessary)

A grease interceptor is required to receive the drainage from fixtures and equipment with grease-laden waste from FSE's. The Highland Tank PGI series is engineered to promote separation in a non-turbulent environment as required by the EPA producing superior effluent effluent quality.

INTENDED USE (Use Additional Sheets If Necessary)

Exterior grease interceptors larger in volume than point source grease interceptors as referenced in Table 1003.3.4.1 of IPC (4 GPM - 100 GPM). Large volume grease interceptors are based on retention time as referenced in Metcalf & Eddy 3rd Ed, Small and Decentralized Wastewater Management Systems. 1998.

DATA SUBMITTED

☒ Letter
☒ Manual
☐ Standards
☐ Installation Instructions
☐ Display Catalog

Reports
☐ ICC - NES
☐ BOCA - NES
☐ ICBO
☐ SBCC
☐ NRB
☒ Other

☒ Product Sample or Model
☐ Prior Approvals by Other Agencies
☐ Recommendations by Model Code Bodies

LABORATORY TEST BY

PILOT SERVICE EXPERIENCE AND CONDITIONS (Use Additional Sheets If Necessary)

RESTRICTIONS FOR USE (Use Additional Sheets If Necessary)

APPLICANT (Note: All correspondence will be sent to this address)

NAME OF COMPANY	APPLICANT NAME
Highland Tank	Chas Tevis

ADDRESS: One Highland Road

CITY	STATE	ZIP CODE	TELEPHONE NUMBER (Include Area Code)
Stoystown	PA	15563	856.985.1214

APPLICANT SIGNATURE (Must be an original signature)	DATE	FAX NUMBER (Include Area Code)
Chas Tevis	11-04-11	856.985.1215

Instructions for Petition Application for Approval of Material, Product or Method

Nature of Application: Check the appropriate box. A component is a preassembled unit of different materials or products that will be incorporated into a building.

Code Under Which Approval is Sought: Check all codes that apply. There may be requirements in 2 or more codes for the approval sought.

Name of Material, Product or Method of Manufacture: Provide the name of the material, product or method.

Other Identification: Provide the model numbers.

Description: Provide a description of the material, product, method or component.

Intended Use: Give a brief description of how the product is incorporated into a building or structure and its purpose.

Data Submitted: Check the appropriate boxes and submit the required number of copies as listed below:

Building Code - **3** copies
Electrical Code - **15** copies
Mechanical Code - **18** copies
Plumbing Code - **11** copies

Only one sample is to be submitted when practical.

Laboratory Test By: List all tests performed and provide copies as listed above.

Pilot Service Experience and Conditions: Provide report of finding as listed above.

Restrictions for Use: Identify any restrictions or conditions of use.

Applicant: Provide all information requested and include an original signature.

U.S. Postal Service
Michigan Dept. of Licensing and Regulatory Affairs
Bureau of Construction Codes
(Address to appropriate division-Electrical Division, Mechanical Division or Plumbing Division *Please address Building approvals to Plan Review Division*)
P.O. Box 30255
7150 Harris Drive
Lansing, MI 48909

Courier Other Than U.S. Postal Service
Michigan Dept. of Licensing and Regulatory Affairs
Bureau of Construction Codes
(Address to appropriate division-Electrical Division, Mechanical Division or Plumbing Division *Please address Building approvals to Plan Review Division*)
2501 Woodlake Circle
Okemos, MI 48864

Validation Area

Tran Info:98 17254882-1 11/22/11
Chk#: 153218 Amt: $500.00
ID: HIGHLAND TANK & MANUFACTURING CO

Highland Tank®

2 Marni Court
Marlton, NJ 08053
Phone: 856-985-1214
Fax: 856-985-1215

November 4th, 2011

Michigan Dept. of Licensing and Regulatory Affairs
Bureau of Construction Codes
P.O. Box 30255
7150 Harris Drive
Lansing, MI 48909
Attn: Plumbing Division

Re: Product approval

Enclosed is our application, eleven sets of supportive documentation, and application fee check required for the listing of Highland Tank grease interceptors as an approved product for the State of Michigan. Highland Tank has been an industry leader in the manufacturing of steel storage tanks, interceptors, and separators for over 65 years. We are petitioning the board to accept Highland Tank's PGI series grease interceptor as an approved product in the State of Michigan. Highland Tank's PGI series grease interceptor is engineered and designed for the rigors of above and underground environments with design features that produce superior effluent quality.

Please contact our local representative or myself with any questions that may arise.

Contact Chas Tevis
Highland Tank
One Highland Road
Stoystown, PA 15563
(P) 814.360.0101
(F) 856.985.1215
(E) ctevis@highlandtank.com

Cindy Zatto
V.E. Sales
25200 Jefferson St
St Clair Shores, MI 48081
(P) 586.774.7760
(F) 586.774.1490
(E) cindyz@vesalesinc.com

Sincerely,

Chas Tevis

Chas Tevis
Division Manager
Highland Tank

Highland Passive Grease Interceptors

For Aboveground and Underground Applications

Highland Tank®

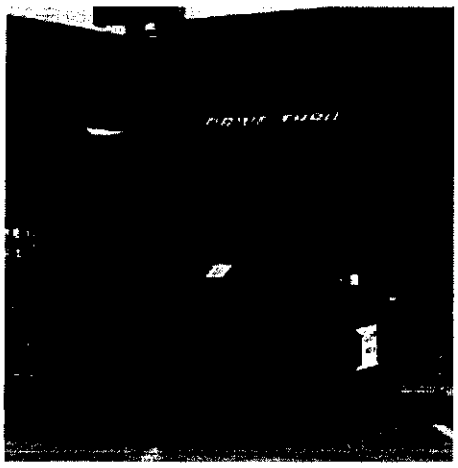

Single Basin

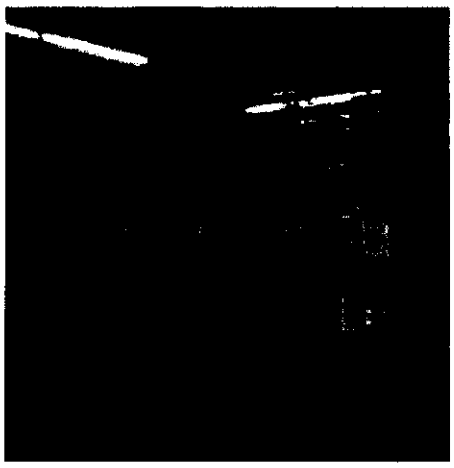

Double Basin

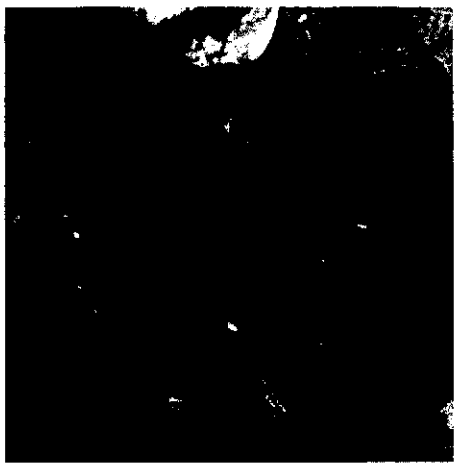

Triple Basin

Highland Passive Grease Interceptors (PGI)

Highland's Passive Grease Interceptors help restaurants and food service facilities comply with the EPA Sewer Pretreatment Regulations! Highland PGI are gravity-based grease interceptors designed to intercept and remove large quantities of sewer clogging fats, oils, and grease (FOG) that might interfere with the proper drainage and treatment of municipal wastewater. These large capacity interceptors have much more retention time, storage capacity, and require much less maintenance by the food facility personnel than smaller capacity indoor grease traps. In addition, Highland PGI are lighter than traditional concrete units, resulting in lower delivery, crane rental, and installation costs.

Highland PGI are highly efficient and meet or exceed all municipal FOG discharge regulations. Their design, construction, and sizing conform to recognized plumbing codes, including those with 30 minute retention times.

Higher Performance Than Competitive Units!

Highland's easy to install interceptors are typically located outside a building near the source of the discharge. They are buried underground to receive the gravity flow from all grease or solids receiving kitchen fixtures and drains.

Like Highland's patented oil/water separators, our PGI contain specially designed internal baffles designed to reduce flow turbulence and accelerate the separation process. This exclusive "Diffusion and Switchback Baffling System" permits the interceptor to retain wastewater long enough for the liquefied grease to separate, cool, and congeal.

The interceptor is divided into multiple compartments. Solids sink to the bottom and collect at the sludge baffles. The grease floats to the surface and accumulates at the grease dams, leaving clearer water beneath as the discharge. Regular inspections determine the thickness of the grease and solids layer. Grease is pumped out through the top quick- opening manways. The cylindrical design is easier to clean than flat bottom interceptors. During pump-out, all the solids and liquids flow to the bottom centerline, right to the suction hose!

Advantages

- *Large volumes with long retention times, even 30 minutes!*
- *Available for above or underground installation*
- *"Diffusion and Switchback Baffling System" results in better performance.*
- *Pressure tested for tightness.*
- *Lighter and easier to install than similar sized concrete units.*
- *Easy to clean! Solids and liquids flow to the bottom centerline, right to the suction hose!*
- *State of the art exterior corrosion protection system with 10-year warranty (underground).*
- *Exterior polyurethane coating for protection from the environment (aboveground).*
- *Heavy-duty interior high temperature, acid resistant lining.*
- *Large manways for inspection, maintenance, and access.*
- *Conforms to IAPMO - PS - 80 - 2006.*

Construction

Highland PGI are of the highest quality and are designed for the rigors of a underground environment. They are constructed from heavy-duty carbon steel, meeting ASTM specifications, for superior strength and durability. Unlike old-style concrete or fiberglass units, Highland's PGI don't crack or collapse under hydrostatic pressure! And we can certify that they're tight – all Highland interceptors are pressure tested in the factory!

Factory and Steel Tank Institute specifications are followed to assure complete internal and external corrosion protection. We offer complete interior/exterior blast and finish coatings, including the Highland HighGuard, UL-1746 approved protective coating with a limited 10-year warranty. Additionally, a full immersion, high temperature, acid resistant internal polyurethane lining is applied to assure years of continuous service and ease of cleaning.

Stainless steel or double-wall construction are available, as are aboveground rectangular tank designs with optional steam or electric heating systems. Site-specific custom designs are also available so that you can taylor volumes, compartments, inlets, outlets, or baffles to satisfy specific code requirements.

General Arrangement - Double Basin - Most Popular and Versatile Design

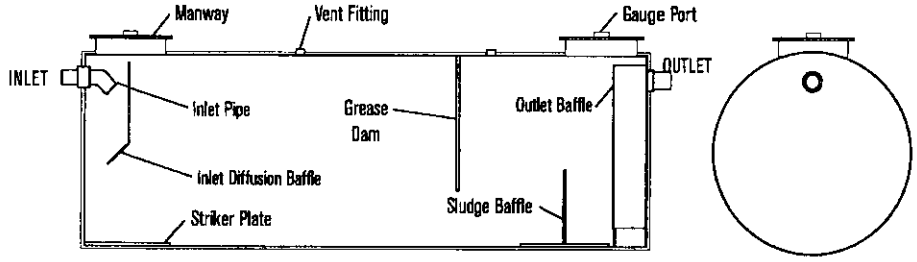

Manhole extensions are available as an option.

Options

- Stainless Steel Construction
- Double-wall Secondary Containment
- Field-Adjustable Manway Extensions
- EZ- Access Manway
- Traffic Duty Covers
- Steam or Electric Heating Systems
- Flanged Connections
- Insulation Systems
- ACT-100-U® or STI-P3® Corrosion Protection Systems
- Extended Warranties

Triple Basin - Approved Washington Suburban Sanitary Commission (WSSC)

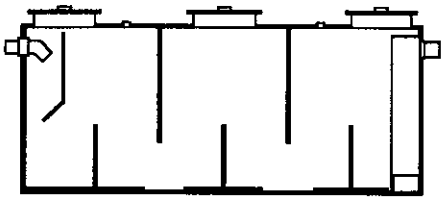

Single Basin - Simple "Knock-Out" Design

Nominal Capacity (gal.)	Operating Grease Volume (gal. / lbs.)	Nominal Inside Dimensions Diameter	Nominal Inside Dimensions Length	Inlet / Outlet** Diameter
* 240	63 / 483	3' 2"	4' 0"	4"
* 300	76 / 581	3' 2"	5' 0"	4"
550	137 / 1,041	3' 6"	7' 9"	4"
750	190 / 1,444	3' 6"	10' 9"	4"
1,000	247 / 1,875	4' 0"	10' 9"	4"
1,500	403 / 3,065	5' 4"	9' 0"	4"
2,000	514 / 3,906	5' 4"	12' 0"	4"
2,500	643 / 4,886	5' 4"	15' 0"	4"
3,000	771 / 5,862	5' 4"	18'-0"	4"
4,000	1.028 / 7,817	5' 4"	24' 0"	4"
5,000	1,245 / 9,465	6' 0"	23' 10"	6"
6,000	1,497 / 11,383	6' 0"	28' 8"	6"
7,000	1,847 / 14.040	7' 0"	24' 4"	6"
8,000	2,125 / 16,155	7' 0"	28' 0"	6"
9,000	2,349 / 17,858	8' 0"	24' 0"	6"
10,000	2,611 / 19,842	8' 0"	26' 8"	6"
12,000	3,133 / 23,811	8' 0"	32' 0"	8"
15,000	5,000 / 37,996	10' 0"	25' 6"	8"
20,000	5,413 / 41,140	10' 6"	31' 0"	8"
25,000	6,544 / 49,738	10' 6"	38' 9"	8"
30,000	7,580 / 57,606	10' 6"	46' 6"	8"
40,000	10,035 / 76,269	12' 0"	47' 6"	8"
50,000	12,570 / 95,538	12' 0"	59' 6"	8"
60,000	15,160 / 190,770	13' 0"	60' 6"	8"

* One Manway, Single-Basin & Double-Basin ONLY. ** All connections are plain end (PE) unless otherwise specified. Larger diameters available.
Gravity Grease Interceptor (GGI) sizing and construction is consistent with industry protocols for complying with the sewer pretreatment regulations.
GGI sizing is based on thirty-minute retention time. Consult Highland Tank Engineering Department for alternate sizing methods.

Please visit us at www.highlandtank.com

One Highland Road
Stoystown, PA 15563
814-893-5701
FAX 893-6126

4535 Elizabethtown Road
Manheim, PA 17545
717-664-0600
FAX 664-0617

958 19th Street
Watervliet, NY 12189
518-273-0801
FAX 273-1365

2700 Patterson Street
Greensboro, NC 27407
336-218-0801
FAX 218-1292

2225 Chestnut Street
Lebanon, PA 17042
717-664-0602
FAX 664-0631

1510 Stoystown Road
Friedens, PA 15541
814-443-6800
FAX 444-8662

© Highland Tank – HT- 2809 – 2/11

RICK SNYDER
GOVERNOR

STATE OF MICHIGAN
DEPARTMENT OF LICENSING AND REGULATORY AFFAIRS
BUREAU OF CONSTRUCTION CODES
IRVIN J. POKE
DIRECTOR

STEVEN H. HILFINGER
DIRECTOR

January 5, 2012

DOCUMENT BCCP-12-002

TO: Members of the State Plumbing Board

FROM: Robert G. Konyndyk, Chief, Plumbing Division

SUBJECT: Product Approval Request for Highland Tank PGI Series – Large volume grease interceptors

The applicant has requested product approval for the Highland Tank PGI Series – Large volume grease interceptors to provide product acceptance through approval clarification.

APPLICANT REPRESENTATIVE:

Mr. Chas Tevis

APPLICANT:

Highland Tank
One Highland Road
Stoystown, PA 15563

AUTHORITY:

Section 21 of 1972 PA 230 being Section 125.1521 of the Michigan Compiled Laws.

PRODUCT:

Grease Interceptors identified by the following model numbers:

GB-75 and GB-250 Great Basin Grease Interceptor Series

APPLICATION:

The grease interceptor is an engineered system for separating grease and oils from drain water flows. The separated grease and oils are trapped within the tank and are manually removed.

APPLICABLE CODE SECTION:

Section P-1003.3.4 Grease interceptor and automatic grease removal devices

LABORATORY TEST:

IAPMO Report File No. 6317, Effective date September 2011

CONDITIONS OF USE AND INSTALLATION:

1. All requirements of the Michigan Plumbing Code shall be applicable.
2. Shall be installed in accordance with manufacturer's installation instructions.
3. This approval shall become void if and when the product no longer meets the requirements of the Michigan Plumbing Code.

RECOMMENDATION:

A great deal of information has been requested of the manufacturer which must be evaluated prior to a recommendation.

RGK/sjl

RICK SNYDER
GOVERNOR

STATE OF MICHIGAN
DEPARTMENT OF LICENSING AND REGULATORY AFFAIRS
BUREAU OF CONSTRUCTION CODES
IRVIN J. POKE
DIRECTOR

STEVEN H. HILFINGER
DIRECTOR

January 5, 2012

Mr. Chas Tevis
Highland Tank
One Highland Road
Stoystown, PA 15563

Dear Mr. Tevis:

The Bureau of Construction Codes, Plumbing Division, has received your product approval application for the Highland Tank PGI Series – Large volume grease interceptors.

The State Plumbing Board will review your product at their scheduled board meeting following receipt and evaluation of the requested information in this correspondence. These are public meetings should you desire to attend and present information related to your product. If approved by the board, your product will be referred to the Construction Code Commission for final approval.

Please provide the following information to assist in our evaluation:

1. Provide a list of the products which you are requesting for consideration. Your application listed the PGI-240. The 240 and 300 capacity products are addressed by PDI and ASME standards which do not appear to be consistent with your approval request. Also it is our opinion that you are only requesting consideration for double and triple basin product which we believe might have a DB or TB designation. Additionally, the most recent International Plumbing Code edition now identifies devices over 500 gallon capacity as being Gravity Grease Interceptors (Chapter 2 Definitions and Section 1003.3.4).
2. Is the 2 inch by 2 inch steel sample with coating indicative of all your product wall and coating thickness?
3. Provide detail on how you accomplish product leak testing.
4. Clarify what type of end piping connections are provided on the tank inlets and outlets, e.g. threaded connections.
5. Provide greater detail on the tanks operating venting requirements. You clearly reference local code but are silent on the proper venting capacities for operation. Additionally clarify

if and where the tank vent connections are provided. Page 10 of your installation instructions reference UL 58; please provide that document.

6. Provide information on the products ability to provide a trap seal and the depth of the trap seal provided by the units, if applicable.
7. Do the products have a flow restrictor provision on the inlet?
8. Provide information of the design sizing requirements for your products. Should flow restrictors not be used, the 30 minute retention time referenced in the code may be a concern.
9. Provide the Metcalf and Eddy 3rd Ed. Small and Decentralized Wastewater Management System, 1998, document referenced in your application.
10. Provide the IAPMO/ANSI Z1001-2007 document used in the IAPMO evaluation along with their entire test report utilized to gain the Certificate of Listing, File No. 6317.

This information must be received for evaluation prior to the board meeting. Please return this letter with all the necessary information requested above to:

Department of Licensing and Regulatory Affairs
Bureau of Construction Codes, Plumbing Division
P. O. Box 30254
Lansing, MI 48909

If you have any further questions, please contact me at (517) 241-9330.

Sincerely,

Robert G. Konyndyk, Chief
Plumbing Division

RGK/sjl

Highland Tank

Unmatched Quality & Service

January 23, 2012

Dept. of Licensing & Regulatory Affairs
Bureau of Construction Codes, Plumbing Division
P.O. Box 30254
Lansing, MI 48909
Attn: Robert G. Konyndyk

Dear Mr. Konyndyk:

As a follow up to our phone conversation, below is a response to your comments received on January 17th regarding our request for state product approval of the Highland Tank PGI series grease interceptors. We very much look forward to the opportunity to discuss state requirements for product approval. Please alert our local representative Cindy Zatto at (586) 774-7760 of the scheduled date of the board meeting.

1. Response: *The PDI standard (PDI-G101) and ASME standard (ASME A112.14.3 and ASME A112.14.4) pertain to hydro-mechanical grease interceptors using flow control devices, sizing up to and including 100 GPM. Highland Tank is requesting State of Michigan product approval on our gravity grease interceptors, double basin and triple basin designs similar to those already approved by the State of Michigan (Pre-cast concrete, fiberglass). Like these grease interceptors, the PGI series grease interceptors are volume based grease interceptors as noted in Chapter 10 of the IPC (Ref. 1003.3.4, Exception).*
2. Response: *The sample provided is an example of the protective coating on each Highland Tank (PGI-series) gravity based grease interceptor. Coating thickness is referenced in the Technical Data Sheets provided (75 mils exterior, 15 mils interior). Each Highland Tank PGI has the structural strength to withstand static and dynamic hydraulic loading while empty and during operating conditions. The interceptor's dimensions and thickness are in strict compliance with Roark's Formulas for Stress and Strain as presented in UL 58, September 30, 1997.*
3. Response: *Each interceptor is tested to 5 psi and fabricated to UL-58 Standards.*
4. Response: *Our standard pipe connection is a no-hub connection. We can provide flanged or threaded connection if requested.*
5. Response: *Each Highland Tank PGI is shipped with 2" vent fittings on the inlet and outlet pipe. Additionally our manways are provided with vent knock-outs. Ultimately the AHJ and Plumbing Codes dictate venting requirements.*

2 Marni Court • Marlton, NJ 08053 • 856-985-1214 • Fax: 856-985-1215
Stoystown, PA / Manheim, PA / Watervliet, NY / Greensboro, NC / Lebanon, PA / Friedens, PA

6. Response: *Not applicable*
7. Response: *Not applicable (Ref. Response to question #1.)*
8. Response: *Sizing is dictated by the AHJ and local Plumbing or Health Codes.*
9. Response: *Not applicable*
10. Response: *See Test Report included in this packet.*

Thank you again for your time and consideration. Please do not hesitate to contact me with any additional questions or comments that may arise.

Sincerely,

Chas Tevis

Chas Tevis
Division Manager
Highland Tank
Phone: 856-985-1214
E-mail: ctevis@highlandtank.com

CC: V.E. Sales Company

Petition Application for Approval of Material, Product or Method
Michigan Department of Licensing and Regulatory Affairs
Bureau of Construction Codes
P.O. Box 30255, Lansing, MI 48909
www.michigan.gov/bcc

Agency Use Only
BCCP-12-003
12-2-11 $500.00

Application Fee: $500.00

Authority: 1972 PA 230
Completion: Mandatory
Penalty: Use of material, product or method will not be approved

LARA is an equal opportunity employer/program. Auxiliary aids, services and other reasonable accommodations are available upon request to individuals with disabilities.

PRODUCT INFORMATION

NATURE OF APPLICATION

☐ Material ☑ Product ☐ Method of Manufacture or Construction ☐ Component

CODE UNDER WHICH APPROVAL IS SOUGHT

☐ Building (140) ☐ Electrical (115) ☐ Mechanical (130) ☑ Plumbing (98)

NAME OF MATERIAL, PRODUCT OR METHOD OF MANUFACTURE (Limit To One Item Per Application)

Trap Guard Device that protects the trap seal of a floor drain to prevent sewer gas emissions.

OTHER IDENTIFICATION (Model Number)

TG22 component for a 2" P-Trap and TG33 component for a 3" P-Trap protection.

DESCRIPTION (Use Additional Sheets If Necessary)

A rigid PVC flange with a space age flexible material device that stays in a normally closed position and only opens with a water flow. To be used as an alternate to a Trap Primer to protect the water seal from evaporation in a floor drain trap.

INTENDED USE (Use Additional Sheets If Necessary)

Can be used as a complete new Trap Guard floor drain or to retrofit older existing problem floor drains

11-30-2011

DATA SUBMITTED

☐ Letter
☐ Manual
☑ Standards
☐ Installation Instructions
☐ Display Catalog

Reports
☑ ICC - NES
☐ BOCA - NES
☐ ICBO
☐ SBCC
☐ NRB
☐ Other

☐ Product Sample or Model
☑ Prior Approvals by Other Agencies
☑ Recommendations by Model Code Bodies

Tran Info:98 17282849-1 12/02/11
ChkN: 3578 Amt: $500.00
ID: PROVENT SYSTEMS INC

LABORATORY TEST BY

ASSE 1072 Testing U.S. Testing Company, Inc- ICC-ES PMG Listing 1091- Intertek Testing Report #478-3031903-1/03

PILOT SERVICE EXPERIENCE AND CONDITIONS (Use Additional Sheets If Necessary)

Has been in use since 2002 with over a million sold throughout the U.S., Canada and the World. A by product feature of this product produces an automatic drain stopper that prevents sewer back-ups. Can be used for both ASME A112.6.3 spec drains and/or CSA B79 General purpose drains.

RESTRICTIONS FOR USE (Use Additional Sheets If Necessary)

Not recognized for use in wood floors subject to wax or floors with grease-laden waste.

APPLICANT (Note: All correspondence will be sent to this address)

NAME OF COMPANY	APPLICANT NAME
ProSet Systems, Inc.	Ken Cornwall

ADDRESS: 1355 Capital Circle

CITY	STATE	ZIP CODE	TELEPHONE NUMBER (Include Area Code)
Lawrenceville	GA	30043	(770) 339-1782

APPLICANT SIGNATURE (Must be an original signature)	DATE	FAX NUMBER (Include Area Code)
Ken Cornwall, Pres.	11-30-11	(770) 339-1784

Instructions for Petition Application for Approval of Material, Product or Method

Nature of Application: Check the appropriate box. A component is a preassembled unit of different materials or products that will be incorporated into a building.

Code Under Which Approval is Sought: Check all codes that apply. There may be requirements in 2 or more codes for the approval sought.

Name of Material, Product or Method of Manufacture: Provide the name of the material, product or method.

Other Identification: Provide the model numbers.

Description: Provide a description of the material, product, method or component.

Intended Use: Give a brief description of how the product is incorporated into a building or structure and its purpose.

Data Submitted: Check the appropriate boxes and submit the required number of copies as listed below:

Building Code - **3** copies
Electrical Code - **15** copies
Mechanical Code - **18** copies
Plumbing Code - **11** copies

Only one sample is to be submitted when practical.

Laboratory Test By: List all tests performed and provide copies as listed above.

Pilot Service Experience and Conditions: Provide report of finding as listed above.

Restrictions for Use: Identify any restrictions or conditions of use.

Applicant: Provide all information requested and include an original signature.

Validation Area

U.S. Postal Service
Michigan Dept. of Licensing and Regulatory Affairs
Bureau of Construction Codes
(Address to appropriate division-Electrical Division, Mechanical Division or Plumbing Division *Please address Building approvals to Plan Review Division*)
P.O. Box 30255
7150 Harris Drive
Lansing, MI 48909

Courier Other Than U.S. Postal Service
Michigan Dept. of Licensing and Regulatory Affairs
Bureau of Construction Codes
(Address to appropriate division-Electrical Division, Mechanical Division or Plumbing Division *Please address Building approvals to Plan Review Division*)
2501 Woodlake Circle
Okemos, MI 48864

FRIM BOB K'S DESK

ICC EVALUATION SERVICE

Most Widely Accepted and Trusted

ICC-ES PMG Listing

PMG-1091

Effective Date: May 1, 2011

This listing is subject to re-examination in one year.

www.icc-es.org/pmg | (800) 423-6587 | (562) 699-0543 *A Subsidiary of the International Code Council®*

CSI: DIVISION: 22 00 00—PLUMBING
Section: 22 13 16—Sanitary Waste and Vent Piping

Product: ProSet Trap Guard® - Trap Primer Alternate in sizes 2 and 3 inches for use in shower floors, concrete floors and ceramic tile floors.

Listee: ProVent Systems, Inc.
1355 Capital Circle
Lawrenceville, Georgia 30043-5866
www.trapguard.com

Compliance with the following codes:

2009 *International Plumbing Code®* (IPC)
2009 *International Residential Code®* (IRC)
2009 *Uniform Plumbing Code®* (UPC)

**Uniform Plumbing Code®* is a registered trademark of IAPMO

Compliance with the following standards:

ASSE 1072-07, (Table 2 sections applicable to SF-Shower floor, CF- Concrete Floor and CT-Ceramic Tile Floor) Performance Requirements for Barrier Type Floor Drain Trap Seal Protection Devices, American Society of Sanitary Engineering.
CSA B79-94(2000), Floor, Area and Shower Drains, and Cleanouts for Residential Construction.
LC1015, PMG Listing Criteria for Elastomeric, Normally Closed, Floor Drain Evaporation Resistant Sealing System.

Identification:

The product and/or package insert must bear the ProVent Systems, Inc., name, the model number and the ICC-ES PMG listing mark.

Installation:

ProSet Trap Guard® - Trap Primer Alternate is to be installed on floor drains conforming with either ANSI/ASME A112.6.3 or CSA B79, General Purpose Drains, in accordance with the manufacturer's instructions, this listing and the applicable code. ProSet Trap Guard® must be installed above the trap seal of the floor drain.

Models:

	FLOOR DRAIN SIZE		FLOW RATE	
MODEL	**INCHES**	**mm DN**	**GPM**	**L/M**
TG22 Component	2	50	12	45.4
TG33 Component	3	80	34	128.7

Conditions of listing:

1. ProSet Trap Guard® - Trap Primer Alternate devices, recognized in this listing, are intended to serve as alternates to the code-required trap primer in floor drains conforming with either ANSI/ASME A112.6.3 or CSA B79, and must serve a functioning trap.

Listings are not to be construed as representing aesthetics or any other attributes not specifically addressed, nor are they to be construed as an endorsement of the subject of the listing or a recommendation for its use. There is no warranty by ICC Evaluation Service, LLC, express or implied, as to any finding or other matter in this listing, or as to any product covered by the listing.

Copyright © 2011

RICK SNYDER
GOVERNOR

STATE OF MICHIGAN
DEPARTMENT OF LICENSING AND REGULATORY AFFAIRS
BUREAU OF CONSTRUCTION CODES
IRVIN J. POKE
DIRECTOR

STEVEN H. HILFINGER
DIRECTOR

January 9, 2012

TO: Members of the State Plumbing Board

FROM: Robert G. Konyndyk

SUBJECT: Certificate of Approval for ProSet Trap Guard Device

ProSet Systems, Inc. has requested commission approval to address a product for installation clarification.

APPLICANT REPRESENTATIVE:

Mr. Ken Cornwall

APPLICANT:

Mr. Ken Cornwall
ProSet Systems, Inc.
1355 Capital Circle
Lawrenceville, GA 30043

AUTHORITY:

Section 21 of Act 230, 1972 being section 125.1521 of the Michigan Compiled Laws.

PRODUCT:

Pro Set, Trap Guard Device, TG22 and TG33

APPLICATION:

Prevents sewer gas emissions from plumbing drains.

Acceptable for new or retrofit installations.

TEST REPORT:

ASSE 1072 Testing U.S. Testing Company, Inc.
Intertek Testing Report # 478-3031903-1/03

APPROVALS:

ICC-ES PMG Listing 1091, Effective May 1, 2011

CONDITIONS OF USE AND INSTALLATION:

1. All requirements of the Michigan Plumbing Code shall be applicable.
2. Installed in accordance with manufacturer's installation instructions.
3. Not acceptable for use in wood floors subject to wax or floors with grease laden waste.
4. This approval shall become void if and when the product no longer meets the requirements of the Michigan Plumbing Code

RECOMMENDATION:

Staff has requested additional information which must be evaluated prior to a staff recommendation.

RGK/sjl

RICK SNYDER
GOVERNOR

STATE OF MICHIGAN
DEPARTMENT OF LICENSING AND REGULATORY AFFAIRS
BUREAU OF CONSTRUCTION CODES
IRVIN J. POKE
DIRECTOR

STEVEN H. HILFINGER
DIRECTOR

January 9, 2012

Mr. Ken Cornwall
ProSet Systems, Inc.
1355 Capital Circle
Lawrenceville, GA 30043

Dear Mr. Cornwall:

The Plumbing Division, Bureau of Construction Codes, has received your product approval application for ProSet, Trap Guard Device, TG22 and TG33.

The State Plumbing Board will review your product following the receipt and evaluation of requested documentation. The board meetings are public meetings should you desire to attend and present information related to your product. If approved by the board your product will be referred to the Construction Code Commission for final approval.

Please provide the following information to assist the board in their decision:

1. Provide a list of the models which you are requesting for consideration with information addressing their application. While your application request identifies the TG22 and TG33 the ICC-ES PMG indicates several different model numbers and the SGS report references others such as TG22P and TG33IP.
2. Your submission identifies the products as ProSet Systems while the SGS report and ICC document reference ProVent. Please Explain.
3. Provide testing information and comments on the products ability to withstand a backpressure of 1 inch of water column as identified in Section 901.2 of the International Plumbing Code.
4. This office has concerns that several of your products are manufactured for installation on the inside of pipe rather than the outside. Pipe standards do not assure acceptable connection in this area. Please comment.
5. Provide 4 product samples of each of your products for which you are requesting acceptance.
6. Provide pages 2 and 3 of the Intertek Testing Report # 478-3031903-1/03, revision dated March 26, 2003. The pages were absent from the submission documents.

7. Provide an explanation why the SGS reports for compliance to ASSE 1072-07 do not address 3.3 Trap Seal Interference Test and 3.9 Physical Test of Membrane Material were not evaluated.
8. Have you obtained a listing from agencies other than ICC, e.g. ASSE or IAPMO?
9. Provide the document identified as LC1015, PMG Listing Criteria for Elastomeric, Normally Closed, Floor Drain Evaporation Resistant Sealing System in the PMG-1091 Listing.

This information must be received for evaluation prior to the board meeting. Please return this letter with all the necessary information requested above to:

Department of Licensing and Regulatory Affairs
Bureau of Construction Codes, Plumbing Division
P.O. Box 30254
Lansing, MI 48909

If you have any further questions please contact me at (517) 241-9330.

Sincerely,

Robert G. Konyndyk, Chief
Plumbing Division

RGK/sjl

PROVENT SYSTEMS
Performance ■ Noise Reduction ■ Savings ■ Design Simplicity ■ Ease of Installation

January 18, 2012

Bob Konyndyk
Chief Plumbing Inspector
State of Michigan

Re: Answers to your January 9, 2012 letter regarding the Trap Guard device.

1. There are basically two different size Trap Guards. They can be modified by using flexible bushings or PVC rigid parts in order to fit various size openings or to fit inside the tail pieces of well known drain manufactures.

2. ProVent Systems, Inc. has purchased the right to both manufacturer and market ProSet products as well as the use of all third party testing documents.

3. This section relies on internal venting within the plumbing system. The Trap Guard simply protects the trap on the top side from evaporation because it is normally in a closed position until water is discharged through the device. If evaporation causes the trap seal loss, the Trap Guard will protect against sewer gas emissions until there is a discharge of water to replace the trap seal. This was the reason for doing the ASSE 1072 Section 3.2 Evaporation Test.

4. We provide a number of flexible bushings and PVC fittings with (O Rings) that provide a tight fit. However, there are some older floor drains that are troublesome.

5. We will provide the basic 2″ and 3″ sizes inside cut-a-way pipe sections. There are too many variations of samples; however the variations all use these 2 sizes.

6. OK

7. The curl portion of the device did not touch any tested water seal. The <u>only</u> possible touch would be with an integral trap that's built into a ASME A112.6.3 drain body.

8. Canadian Municipalities.

9. OK

Sincerely,

Ken Cornwall

Ken Cornwall, Pres.
Enclosures & samples

ProVent Systems Inc. ■ 1355 Capital Circle Lawrenceville ■ Georgia 30043-5866
770.339.1782 ■ 800.262.5355 ■ Fax 770.339.1784
www.ProVentSystems.com