Form No. DTMB-3522 (Rev. 4/2012)
AUTHORITY: Act 431 of 1984
COMPLETION: Required
PENALTY: Contract will not be executed unless form is filed

STATE OF MICHIGAN
DEPARTMENT OF TECHNOLOGY, MANAGEMENT AND BUDGET
PROCUREMENT
P.O. BOX 30026, LANSING, MI 48909
OR
530 W. ALLEGAN, LANSING, MI 48933

NOTICE OF CONTRACT NO. 071B5500010

between

THE STATE OF MICHIGAN

and

NAME & ADDRESS OF CONTRACTOR:	PRIMARY CONTACT	EMAIL
Truck & Trailer Specialties, Inc.	Dan Bouwman	dbouwman@ttspec.com
6726 Hanna Lake Ave SE	TELEPHONE	CONTRACTOR #, MAIL CODE
Dutton, MI 49316	1-616-698-8215	

STATE CONTACTS	AGENCY	NAME	PHONE	EMAIL
CONTRACT COMPLIANCE INSPECTOR:	MDOT	Jeff Turner	517-334-7763	Turnerj3@michigan.gov
BUYER:	DTMB	Yvon Dufour	517-284-6996	dufoury@michigan.gov

CONTRACT SUMMARY:

DESCRIPTION: Truck Build-up Winter Maintenance Components

Optional Use

INITIAL TERM	EFFECTIVE DATE	INITIAL EXPIRATION DATE	AVAILABLE OPTIONS
Three Years	October 1, 2014	September 30, 2017	Two one year options
PAYMENT TERMS	**F.O.B**	**SHIPPED**	**SHIPPED FROM**
Net 45 Days	Delivered	150 Days ARO	N/A

ALTERNATE PAYMENT OPTIONS:	AVAILABLE TO MiDEAL PARTICIPANTS
☐ P-card ☐ Direct Voucher (DV) ☐ Other	☒ YES ☐ NO

MINIMUM DELIVERY REQUIREMENTS:

No minimum order requirement

MISCELLANEOUS INFORMATION:

N/A

ESTIMATED CONTRACT VALUE AT TIME OF EXECUTION:	$6,549,109.00

THIS IS NOT AN ORDER: This Contract Agreement is awarded on the basis of our inquiry bearing the solicitation #007114B0002692. Orders for delivery will be issued through the issuance of a Purchase Order Form.

Notice of Contract #: 071B5500010

FOR THE CONTRACTOR:	**FOR THE STATE:**
Truck & Trailer Specialties, Inc.	
Firm Name	Signature
	Rebecca Cook/Division Director
Authorized Agent Signature	Name/Title
	DTMB Procurement
Authorized Agent (Print or Type)	Enter Name of Agency
Date	Date

STATE OF MICHIGAN

STANDARD CONTRACT TERMS

This STANDARD CONTRACT ("**Contract**") is agreed to between the State of Michigan (the "**State**") and Truck & Trailer Specialties, Inc. ("**Contractor**"), a Michigan corporation. This Contract is effective on October 1, 2014 ("**Effective Date**"), and unless terminated, expires on September 30, 2017.

This Contract may be renewed for up to two (2) additional one (1) year period(s). Renewal must be by written agreement of the parties.

The parties agree as follows:

1. **Duties of Contractor.** Contractor must perform the services and provide the deliverables described in **Exhibit A – Statement of Work** (the "**Contract Activities**"). An obligation to provide delivery of any commodity is considered a service and is a Contract Activity.

   Contractor must furnish all labor, equipment, materials, and supplies necessary for the performance of the Contract Activities, and meet operational standards, unless otherwise specified in Exhibit A.

   Contractor must: (a) perform the Contract Activities in a timely, professional, safe, and workmanlike manner consistent with standards in the trade, profession, or industry; (b) meet or exceed the performance and operational standards, and specifications of the Contract; (c) provide all Contract Activities in good quality, with no material defects; (d) not interfere with the State's operations; (e) obtain and maintain all necessary licenses, permits or other authorizations necessary for the performance of the Contract; (f) cooperate with the State, including the State's quality assurance personnel, and any third party to achieve the objectives of the Contract; (g) return to the State any State-furnished equipment or other resources in the same condition as when provided when no longer required for the Contract; (h) not make any media releases without prior written authorization from the State; (i) assign to the State any claims resulting from state or federal antitrust violations to the extent that those violations concern materials or services supplied by third parties toward fulfillment of the Contract; (j) comply with all State physical and IT security policies and standards which will be made available upon request; and (k) provide the State priority in performance of the Contract except as mandated by federal disaster response requirements. Any breach under this paragraph is considered a material breach.

   Contractor must also be clearly identifiable while on State property by wearing identification issued by the State, and clearly identify themselves whenever making contact with the State.

2. **Notices.** All notices and other communications required or permitted under this Contract must be in writing and will be considered given and received: (a) when verified by written receipt if sent by courier; (b) when actually received if sent by mail without verification of receipt; or (c) when verified by automated receipt or electronic logs if sent by facsimile or email.

If to State:	If to Contractor:
Yvon Dufour *525 W. Allegan,* *Constitution Hall, 1st Floor NE* *Lansing, MI 48933* *dufoury@michigan.gov* *(517) 284-6996*	*Dan Bouwman* *6726 Hanna Lake Ave SE* *Dutton, MI 49316* *dbouwman@ttspec.com* *1-(616) 698-8215*

3. **Contract Administrator.** The Contract Administrator for each party is the only person authorized to modify any terms and conditions of this Contract (each a "**Contract Administrator**"):

If to State:	If to Contractor:
Yvon Dufour *525 W. Allegan,* *Constitution Hall, 1st Floor NE* *Lansing, MI 48933* *dufoury@michigan.gov* *(517) 284-6996*	*Dan Bouwman* *6726 Hanna Lake Ave SE* *Dutton, MI 49316* *dbouwman@ttspec.com* *1-(616) 698-8215*

4. **Program Manager.** The Program Manager for each party will monitor and coordinate the day-to-day activities of the Contract (each a "**Program Manager**"):

If to State:	If to Contractor:
Jeff Turner *2522 W. Main St.* *Lansing, MI 48917* *turnerj3@michigan.gov* *(517) 334-7763]*	*Dan Bouwman* *6726 Hanna Lake Ave SE* *Dutton, MI 49316* *dbouwman@ttspec.com* *1-(616) 698-8215*

5. **Performance Guarantee**. Contractor must at all times have financial resources sufficient, in the opinion of the State, to ensure performance of the Contract and must provide proof upon request. The State may require a performance bond (as specified in Exhibit A) if, in the opinion of the State, it will ensure performance of the Contract.

6. **Insurance Requirements.** Contractor must maintain the insurances identified below and is responsible for all deductibles. All required insurance must: (a) protect the State from claims that may arise out of, are alleged to arise out of, or result from Contractor's or a subcontractor's performance; (b) be primary and non-contributing to any comparable liability insurance (including self-insurance) carried by the State; and (c) be provided by an company with an A.M. Best rating of "A" or better and a financial size of VII or better.

Insurance Type	Additional Requirements
Commercial General Liability Insurance	
Minimal Limits: $1,000,000 Each Occurrence Limit $1,000,000 Personal & Advertising Injury Limit $2,000,000 General Aggregate Limit $2,000,000 Products/Completed Operations Deductible Maximum: $50,000 Each Occurrence	Contractor must have their policy: (1) endorsed to add "the State of Michigan, its departments, divisions, agencies, offices, commissions, officers, employees, and agents" as additional insureds using endorsement CG 20 10 11 85, or both CG 2010 07 04 and CG 2037 07 04; (2) include a waiver of subrogation; and (3) for a claims-made policy, provide 3 years of tail coverage.
Umbrella or Excess Liability Insurance	
Minimal Limits: $5,000,000 General Aggregate	Contractor must have their policy: (1) endorsed to add "the State of Michigan, its departments, divisions, agencies, offices, commissions, officers, employees, and agents" as additional insureds, and (2) include a waiver of subrogation.
Motor Vehicle Insurance	
Minimal Limits: $1,000,000 Per Occurrence	
Workers' Compensation Insurance	

Minimal Limits: Coverage according to applicable laws governing work activities.	Waiver of subrogation, except where waiver is prohibited by law.
Employers Liability Insurance	
Minimal Limits: $100,000 Each Accident $100,000 Each Employee by Disease $500,000 Aggregate Disease.	

If Contractor's policy contains limits higher than the minimum limits, the State is entitled to coverage to the extent of the higher limits. The minimum limits are not intended, and may not be construed to limit any liability or indemnity of Contractor to any indemnified party or other persons.

Contractor must: (a) provide insurance certificates to the Contract Administrator, containing the agreement or purchase order number, at Contract formation and within 20 calendar days of the expiration date of the applicable policies; (b) require that subcontractors maintain the required insurances contained in this Section; (c) notify the Contract Administrator within 5 business days if any insurance is cancelled; and (d) waive all rights against the State for damages covered by insurance. Failure to maintain the required insurance does not limit this waiver.

7. **Administrative Fee and Reporting.** Contractor must pay an administrative fee of 1% on all payments made to Contractor under the Contract including transactions with the State (including its departments, divisions, agencies, offices, and commissions), MiDEAL members, and other states (including governmental subdivisions and authorized entities). Administrative fee payments must be made by check payable to the State of Michigan and mailed to:

   Department of Technology, Management and Budget
   Financial Services – Cashier Unit
   Lewis Cass Building
   320 South Walnut St.
   P.O. Box 30681
   Lansing, MI 48909

   Contractor must submit an itemized purchasing activity report, which includes at a minimum, the name of the purchasing entity and the total dollar volume in sales. Reports should be mailed to DTMB-Procurement.

   The administrative fee and purchasing activity report are due within 30 calendar days from the last day of each calendar quarter.

8. **Extended Purchasing Program.** The Contract is extended to MiDEAL members. MiDEAL members include local units of government, school districts, universities, community colleges, and nonprofit hospitals. A current list of MiDEAL members is available at www.michigan.gov/mideal. Upon written agreement between the State and Contractor, this Contract may also be extended to: (a) State of Michigan employees and (b) other states (including governmental subdivisions and authorized entities).

   If extended, Contractor must supply all Contract Activities at the established Contract prices and terms. The State reserves the right to negotiate additional discounts based on any increased volume generated by such extensions.

   Contractor must submit invoices to, and receive payment from, extended purchasing program members on a direct and individual basis.

9. **Independent Contractor.** Contractor is an independent contractor and assumes all rights, obligations and liabilities set forth in this Contract. Contractor, its employees, and agents will not be considered employees of the State. No partnership or joint venture relationship is created by virtue of this Contract. Contractor, and not the State, is responsible for the payment of wages, benefits and taxes of

Contractor's employees and any subcontractors. Prior performance does not modify Contractor's status as an independent contractor.

10. **Subcontracting.** Contractor may not delegate any of its obligations under the Contract without the prior written approval of the State. Contractor must notify the State at least 90 calendar days before the proposed delegation, and provide the State any information it requests to determine whether the delegation is in its best interest. If approved, Contractor must: (a) be the sole point of contact regarding all contractual matters, including payment and charges for all Contract Activities; (b) make all payments to the subcontractor; and (c) incorporate the terms and conditions contained in this Contract in any subcontract with a subcontractor. Contractor remains responsible for the completion of the Contract Activities, compliance with the terms of this Contract, and the acts and omissions of the subcontractor. The State, in its sole discretion, may require the replacement of any subcontractor.

11. **Staffing.** The State's Contract Administrator may require Contractor to remove or reassign personnel by providing a notice to Contractor.

12. **Background Checks.** Upon request, Contractor must perform background checks on all employees and subcontractors and its employees prior to their assignment. The scope is at the discretion of the State and documentation must be provided as requested. Contractor is responsible for all costs associated with the requested background checks. The State, in its sole discretion, may also perform background checks.

13. **Assignment.** Contractor may not assign this Contract to any other party without the prior approval of the State. Upon notice to Contractor, the State, in its sole discretion, may assign in whole or in part, its rights or responsibilities under this Contract to any other party. If the State determines that a novation of the Contract to a third party is necessary, Contractor will agree to the novation, provide all necessary documentation and signatures, and continue to perform, with the third party, its obligations under the Contract.

14. **Change of Control.** Contractor will notify, at least 90 calendar days before the effective date, the State of a change in Contractor's organizational structure or ownership. For purposes of this Contract, a change in control means any of the following: (a) a sale of more than 50% of Contractor's stock; (b) a sale of substantially all of Contractor's assets; (c) a change in a majority of Contractor's board members; (d) consummation of a merger or consolidation of Contractor with any other entity; (e) a change in ownership through a transaction or series of transactions; (f) or the board (or the stockholders) approves a plan of complete liquidation. A change of control does not include any consolidation or merger effected exclusively to change the domicile of Contractor, or any transaction or series of transactions principally for bona fide equity financing purposes.

    In the event of a change of control, Contractor must require the successor to assume this Contract and all of its obligations under this Contract.

15. **Ordering.** Contractor is not authorized to begin performance until receipt of authorization as identified in Exhibit A.

16. **Acceptance.** Contract Activities are subject to inspection and testing by the State within 30 calendar days of the State's receipt of them ("**State Review Period**"), unless otherwise provided in Exhibit A. If the Contract Activities are not fully accepted by the State, the State will notify Contractor by the end of the State Review Period that either: (a) the Contract Activities are accepted, but noted deficiencies must be corrected; or (b) the Contract Activities are rejected. If the State finds material deficiencies, it may: (i) reject the Contract Activities without performing any further inspections; (ii) demand performance at no additional cost; or (iii) terminate this Contract in accordance with Section 23, Termination for Cause.

    Within 10 business days from the date of Contractor's receipt of notification of acceptance with deficiencies or rejection of any Contract Activities, Contractor must cure, at no additional cost, the deficiency and deliver unequivocally acceptable Contract Activities to the State. If acceptance with deficiencies or rejection of the Contract Activities impacts the content or delivery of other non-completed Contract Activities, the parties' respective Program Managers must determine an agreed to number of days for re-submission that minimizes the overall impact to the Contract. However, nothing herein affects, alters, or relieves Contractor of its obligations to correct deficiencies in accordance with the time response standards set forth in this Contract.

If Contractor is unable or refuses to correct the deficiency within the time response standards set forth in this Contract, the State may cancel the order in whole or in part. The State, or a third party identified by the State, may perform the Contract Activities and recover the difference between the cost to cure and the Contract price plus an additional 10% administrative fee.

17. **Delivery.** Contractor must deliver all Contract Activities F.O.B. destination, within the State premises with transportation and handling charges paid by Contractor, unless otherwise specified in Exhibit A. All containers and packaging becomes the State's exclusive property upon acceptance.

18. **Risk of Loss and Title.** Until final acceptance, title and risk of loss or damage to Contract Activities remains with Contractor. Contractor is responsible for filing, processing, and collecting all damage claims. The State will record and report to Contractor any evidence of visible damage. If the State rejects the Contract Activities, Contractor must remove them from the premises within 10 calendar days after notification of rejection. The risk of loss of rejected or non-conforming Contract Activities remains with Contractor. Rejected Contract Activities not removed by Contractor within 10 calendar days will be deemed abandoned by Contractor, and the State will have the right to dispose of it as its own property. Contractor must reimburse the State for costs and expenses incurred in storing or effecting removal or disposition of rejected Contract Activities.

19. **Warranty Period**. The warranty period, if applicable, for Contract Activities is a fixed period commencing on the date specified in Exhibit A. If the Contract Activities do not function as warranted during the warranty period the State may return such non-conforming Contract Activities to the Contractor for a full refund.

20. **Terms of Payment.** Invoices must conform to the requirements communicated from time-to-time by the State. All undisputed amounts are payable within 45 days of the State's receipt. Contractor may only charge for Contract Activities performed as specified in Exhibit A. Invoices must include an itemized statement of all charges. The State is exempt from State sales tax for direct purchases and may be exempt from federal excise tax, if Contract Activities purchased under the Contract are for the State's exclusive use. Prices are exclusive of all taxes, and Contractor is solely responsible for payment of any applicable taxes.

    The State has the right to withhold payment of any disputed amounts until the parties agree as to the validity of the disputed amount. The State will notify Contractor of any dispute within a reasonable time. Payment by the State will not constitute a waiver of any rights as to Contractor's continuing obligations, including claims for deficiencies or substandard Contract Activities. Contractor's acceptance of final payment by the State constitutes a waiver of all claims by Contractor against the State for payment under this Contract, other than those claims previously filed in writing on a timely basis and still disputed.

    The State will only disburse payments under this Contract through Electronic Funds Transfer (EFT). Contractor must register with the State at http://www.michigan.gov/cpexpress to receive electronic fund transfer payments. If Contractor does not register, the State is not liable for failure to provide payment. Without prejudice to any other right or remedy it may have, the State reserves the right to set off at any time any amount then due and owing to it by Contractor against any amount payable by the State to Contractor under this Contract.

21. **Liquidated Damages.** Liquidated damages, if applicable, will be assessed as described in Exhibit A.

22. **Stop Work Order.** The State may suspend any or all activities under the Contract at any time. The State will provide Contractor a written stop work order detailing the suspension. Contractor must comply with the stop work order upon receipt. Within 90 calendar days, or any longer period agreed to by Contractor, the State will either: (a) issue a notice authorizing Contractor to resume work, or (b) terminate the Contract or purchase order. The State will not pay for Contract Activities, Contractor's lost profits, or any additional compensation during a stop work period.

23. **Termination for Cause.** The State may terminate this Contract for cause, in whole or in part, if Contractor, as determined by the State: (a) endangers the value, integrity, or security of any location, data, or personnel; (b) becomes insolvent, petitions for bankruptcy court proceedings, or has an involuntary bankruptcy proceeding filed against it by any creditor; (c) engages in any conduct that may expose the State to liability; (d) breaches any of its material duties or obligations; or (e) fails to cure a

breach within the time stated in a notice of breach. Any reference to specific breaches being material breaches within this Contract will not be construed to mean that other breaches are not material.

If the State terminates this Contract under this Section, the State will issue a termination notice specifying whether Contractor must: (a) cease performance immediately, or (b) continue to perform for a specified period. If it is later determined that Contractor was not in breach of the Contract, the termination will be deemed to have been a Termination for Convenience, effective as of the same date, and the rights and obligations of the parties will be limited to those provided in Section 24, Termination for Convenience.

The State will only pay for amounts due to Contractor for Contract Activities accepted by the State on or before the date of termination, subject to the State's right to set off any amounts owed by the Contractor for the State's reasonable costs in terminating this Contract. The Contractor must pay all reasonable costs incurred by the State in terminating this Contract for cause, including administrative costs, attorneys' fees, court costs, transition costs, and any costs the State incurs to procure the Contract Activities from other sources.

24. Termination for Convenience. The State may immediately terminate this Contract in whole or in part without penalty and for any reason, including but not limited to, appropriation or budget shortfalls. The termination notice will specify whether Contractor must: (a) cease performance of the Contract Activities immediately, or (b) continue to perform the Contract Activities in accordance with Section 25, Transition Responsibilities. If the State terminates this Contract for convenience, the State will pay all reasonable costs, as determined by the State, for State approved Transition Responsibilities.

25. Transition Responsibilities. Upon termination or expiration of this Contract for any reason, Contractor must, for a period of time specified by the State (not to exceed 90 calendar days), provide all reasonable transition assistance requested by the State, to allow for the expired or terminated portion of the Contract Activities to continue without interruption or adverse effect, and to facilitate the orderly transfer of such Contract Activities to the State or its designees. Such transition assistance may include, but is not limited to: (a) continuing to perform the Contract Activities at the established Contract rates; (b) taking all reasonable and necessary measures to transition performance of the work, including all applicable Contract Activities, training, equipment, software, leases, reports and other documentation, to the State or the State's designee; (c) taking all necessary and appropriate steps, or such other action as the State may direct, to preserve, maintain, protect, or return to the State all materials, data, property, and confidential information provided directly or indirectly to Contractor by any entity, agent, vendor, or employee of the State; (d) transferring title in and delivering to the State, at the State's discretion, all completed or partially completed deliverables prepared under this Contract as of the Contract termination date; and (e) preparing an accurate accounting from which the State and Contractor may reconcile all outstanding accounts (collectively, "**Transition Responsibilities**"). This Contract will automatically be extended through the end of the transition period.

26. General Indemnification. Contractor must defend, indemnify and hold the State, its departments, divisions, agencies, offices, commissions, officers, and employees harmless, without limitation, from and against any and all actions, claims, losses, liabilities, damages, costs, attorney fees, and expenses (including those required to establish the right to indemnification), arising out of or relating to: (a) any breach by Contractor (or any of Contractor's employees, agents, subcontractors, or by anyone else for whose acts any of them may be liable) of any of the promises, agreements, representations, warranties, or insurance requirements contained in this Contract; (b) any infringement, misappropriation, or other violation of any intellectual property right or other right of any third party; (c) any bodily injury, death, or damage to real or tangible personal property occurring wholly or in part due to action or inaction by Contractor (or any of Contractor's employees, agents, subcontractors, or by anyone else for whose acts any of them may be liable); and (d) any acts or omissions of Contractor (or any of Contractor's employees, agents, subcontractors, or by anyone else for whose acts any of them may be liable).

The State will notify Contractor in writing if indemnification is sought; however, failure to do so will not relieve Contractor, except to the extent that Contractor is materially prejudiced. Contractor must, to the satisfaction of the State, demonstrate its financial ability to carry out these obligations.

The State is entitled to: (i) regular updates on proceeding status; (ii) participate in the defense of the proceeding; (iii) employ its own counsel; and to (iv) retain control of the defense if the State deems necessary. Contractor will not, without the State's written consent (not to be unreasonably withheld),

settle, compromise, or consent to the entry of any judgment in or otherwise seek to terminate any claim, action, or proceeding. To the extent that any State employee, official, or law may be involved or challenged, the State may, at its own expense, control the defense of that portion of the claim.

Any litigation activity on behalf of the State, or any of its subdivisions under this Section, must be coordinated with the Department of Attorney General. An attorney designated to represent the State may not do so until approved by the Michigan Attorney General and appointed as a Special Assistant Attorney General.

27. **Infringement Remedies.** If, in either party's opinion, any piece of equipment, software, commodity, or service supplied by Contractor or its subcontractors, or its operation, use or reproduction, is likely to become the subject of a copyright, patent, trademark, or trade secret infringement claim, Contractor must, at its expense: (a) procure for the State the right to continue using the equipment, software, commodity, or service, or if this option is not reasonably available to Contractor, (b) replace or modify the same so that it becomes non-infringing; or (c) accept its return by the State with appropriate credits to the State against Contractor's charges and reimburse the State for any losses or costs incurred as a consequence of the State ceasing its use and returning it.

28. **Limitation of Liability.** The State is not liable for consequential, incidental, indirect, or special damages, regardless of the nature of the action.

29. **Disclosure of Litigation, or Other Proceeding.** Contractor must notify the State within 14 calendar days of receiving notice of any litigation, investigation, arbitration, or other proceeding (collectively, "**Proceeding**") involving Contractor, a subcontractor, or an officer or director of Contractor or subcontractor, that arises during the term of the Contract, including: (a) a criminal Proceeding; (b) a parole or probation Proceeding; (c) a Proceeding under the Sarbanes-Oxley Act; (d) a civil Proceeding involving: (1) a claim that might reasonably be expected to adversely affect Contractor's viability or financial stability; or (2) a governmental or public entity's claim or written allegation of fraud; or (e) a Proceeding involving any license that Contractor is required to possess in order to perform under this Contract.

30. **State Data.** All data and information provided to Contractor by or on behalf of the State, and all data and information derived therefrom, is the exclusive property of the State ("**State Data**"); this definition is to be construed as broadly as possible. Upon request, Contractor must provide to the State, or a third party designated by the State, all State Data within 10 calendar days of the request and in the format requested by the State. Contractor will assume all costs incurred in compiling and supplying State Data. No State Data may be used for any marketing purposes.

31. **Reserved.**

32. **Non-Disclosure of Confidential Information**. The parties acknowledge that each party may be exposed to or acquire communication or data of the other party that is confidential, privileged communication not intended to be disclosed to third parties. The provisions of this Section survive the termination of this Contract.

    a. Meaning of Confidential Information. For the purposes of this Contract, the term "**Confidential Information**" means all information and documentation of a party that: (a) has been marked "confidential" or with words of similar meaning, at the time of disclosure by such party; (b) if disclosed orally or not marked "confidential" or with words of similar meaning, was subsequently summarized in writing by the disclosing party and marked "confidential" or with words of similar meaning; and, (c) should reasonably be recognized as confidential information of the disclosing party. The term "Confidential Information" does not include any information or documentation that was: (a) subject to disclosure under the Michigan Freedom of Information Act (FOIA); (b) already in the possession of the receiving party without an obligation of confidentiality; (c) developed independently by the receiving party, as demonstrated by the receiving party, without violating the disclosing party's proprietary rights; (d) obtained from a source other than the disclosing party without an obligation of confidentiality; or, (e) publicly available when received, or thereafter became publicly available (other than through any unauthorized disclosure by, through, or on behalf of, the receiving party). For purposes of this Contract, in all cases and for all matters, State Data is deemed to be Confidential Information.

b. Obligation of Confidentiality. The parties agree to hold all Confidential Information in strict confidence and not to copy, reproduce, sell, transfer, or otherwise dispose of, give or disclose such Confidential Information to third parties other than employees, agents, or subcontractors of a party who have a need to know in connection with this Contract or to use such Confidential Information for any purposes whatsoever other than the performance of this Contract. The parties agree to advise and require their respective employees, agents, and subcontractors of their obligations to keep all Confidential Information confidential. Disclosure to a subcontractor is permissible where: (a) use of a subcontractor is authorized under this Contract; (b) the disclosure is necessary or otherwise naturally occurs in connection with work that is within the subcontractor's responsibilities; and (c) Contractor obligates the subcontractor in a written contract to maintain the State's Confidential Information in confidence. At the State's request, any employee of Contractor or any subcontractor may be required to execute a separate agreement to be bound by the provisions of this Section.

c. Cooperation to Prevent Disclosure of Confidential Information. Each party must use its best efforts to assist the other party in identifying and preventing any unauthorized use or disclosure of any Confidential Information. Without limiting the foregoing, each party must advise the other party immediately in the event either party learns or has reason to believe that any person who has had access to Confidential Information has violated or intends to violate the terms of this Contract and each party will cooperate with the other party in seeking injunctive or other equitable relief against any such person.

d. Remedies for Breach of Obligation of Confidentiality. Each party acknowledges that breach of its obligation of confidentiality may give rise to irreparable injury to the other party, which damage may be inadequately compensable in the form of monetary damages. Accordingly, a party may seek and obtain injunctive relief against the breach or threatened breach of the foregoing undertakings, in addition to any other legal remedies which may be available, to include, in the case of the State, at the sole election of the State, the immediate termination, without liability to the State, of this Contract or any Statement of Work corresponding to the breach or threatened breach.

e. Surrender of Confidential Information upon Termination. Upon termination of this Contract or a Statement of Work, in whole or in part, each party must, within 5 calendar days from the date of termination, return to the other party any and all Confidential Information received from the other party, or created or received by a party on behalf of the other party, which are in such party's possession, custody, or control; provided, however, that Contractor must return State Data to the State following the timeframe and procedure described further in this Contract. Should Contractor or the State determine that the return of any non-State Data Confidential Information is not feasible, such party must destroy the non-State Data Confidential Information and must certify the same in writing within 5 calendar days from the date of termination to the other party.

33. Reserved.

34. Reserved

35. Reserved

36. Records Maintenance, Inspection, Examination, and Audit. The State or its designee may audit Contractor to verify compliance with this Contract. Contractor must retain, and provide to the State or its designee and the auditor general upon request, all financial and accounting records related to the Contract through the term of the Contract and for 7 years after the latter of termination, expiration, or final payment under this Contract or any extension ("**Audit Period**"). If an audit, litigation, or other action involving the records is initiated before the end of the Audit Period, Contractor must retain the records until all issues are resolved.

Within 10 calendar days of providing notice, the State and its authorized representatives or designees have the right to enter and inspect Contractor's premises or any other places where Contract Activities are being performed, and examine, copy, and audit all records related to this Contract. Contractor must

cooperate and provide reasonable assistance. If any financial errors are revealed, the amount in error must be reflected as a credit or debit on subsequent invoices until the amount is paid or refunded. Any remaining balance at the end of the Contract must be paid or refunded within 45 calendar days.

This Section applies to Contractor, any parent, affiliate, or subsidiary organization of Contractor, and any subcontractor that performs Contract Activities in connection with this Contract.

37. **Warranties and Representations.** Contractor represents and warrants: (a) Contractor is the owner or licensee of any Contract Activities that it licenses, sells, or develops and Contractor has the rights necessary to convey title, ownership rights, or licensed use; (b) all Contract Activities are delivered free from any security interest, lien, or encumbrance and will continue in that respect; (c) the Contract Activities will not infringe the patent, trademark, copyright, trade secret, or other proprietary rights of any third party; (d) Contractor must assign or otherwise transfer to the State or its designee any manufacturer's warranty for the Contract Activities; (e) the Contract Activities are merchantable and fit for the specific purposes identified in the Contract; (f) the Contract signatory has the authority to enter into this Contract; (g) all information furnished by Contractor in connection with the Contract fairly and accurately represents Contractor's business, properties, finances, and operations as of the dates covered by the information, and Contractor will inform the State of any material adverse changes; and (h) all information furnished and representations made in connection with the award of this Contract is true, accurate, and complete, and contains no false statements or omits any fact that would make the information misleading. A breach of this Section is considered a material breach of this Contract, which entitles the State to terminate this Contract under Section 23, Termination for Cause.

38. **Conflicts and Ethics.** Contractor will uphold high ethical standards and is prohibited from: (a) holding or acquiring an interest that would conflict with this Contract; (b) doing anything that creates an appearance of impropriety with respect to the award or performance of the Contract; (c) attempting to influence or appearing to influence any State employee by the direct or indirect offer of anything of value; or (d) paying or agreeing to pay any person, other than employees and consultants working for Contractor, any consideration contingent upon the award of the Contract. Contractor must immediately notify the State of any violation or potential violation of these standards. This Section applies to Contractor, any parent, affiliate, or subsidiary organization of Contractor, and any subcontractor that performs Contract Activities in connection with this Contract.

39. **Compliance with Laws.** Contractor must comply with all federal, state and local laws, rules and regulations.

40. **Reserved.**

41. **Nondiscrimination.** Under the Elliott-Larsen Civil Rights Act, 1976 PA 453, MCL 37.2101, *et seq*., and the Persons with Disabilities Civil Rights Act, 1976 PA 220, MCL 37.1101, *et seq*., Contractor and its subcontractors agree not to discriminate against an employee or applicant for employment with respect to hire, tenure, terms, conditions, or privileges of employment, or a matter directly or indirectly related to employment, because of race, color, religion, national origin, age, sex, height, weight, marital status, or mental or physical disability. Breach of this covenant is a material breach of this Contract.

42. **Unfair Labor Practice.** Under MCL 423.324, the State may void any Contract with a Contractor or subcontractor who appears on the Unfair Labor Practice register complied under MCL 423.322.

43. **Governing Law.** This Contract is governed, construed, and enforced in accordance with Michigan law, excluding choice-of-law principles, and all claims relating to or arising out of this Contract are governed by Michigan law, excluding choice-of-law principles. Any dispute arising from this Contract must be resolved in Michigan Court of Claims. Contractor consents to venue in Ingham County, and waives any objections, such as lack of personal jurisdiction or *forum non conveniens*. Contractor must appoint agents in Michigan to receive service of process.

44. **Non-Exclusivity.** Nothing contained in this Contract is intended nor will be construed as creating any requirements contract with Contractor. This Contract does not restrict the State or its agencies from acquiring similar, equal, or like Contract Activities from other sources.

45. **Reserved**

46. **Dispute Resolution.** The parties will endeavor to resolve any Contract dispute in accordance with this provision. The dispute will be referred to the parties' respective Contract Administrators or Program Managers. Such referral must include a description of the issues and all supporting documentation. The parties must submit the dispute to a senior executive if unable to resolve the dispute within 15 business days. The parties will continue performing while a dispute is being resolved, unless the dispute precludes performance. A dispute involving payment does not preclude performance.

    Litigation to resolve the dispute will not be instituted until after the dispute has been elevated to the parties' senior executive and either concludes that resolution is unlikely, or fails to respond within 15 business days. The parties are not prohibited from instituting formal proceedings: (a) to avoid the expiration of statute of limitations period; (b) to preserve a superior position with respect to creditors; or (c) where a party makes a determination that a temporary restraining order or other injunctive relief is the only adequate remedy. This Section does not limit the State's right to terminate the Contract.

47. **Media Releases.** News releases (including promotional literature and commercial advertisements) pertaining to the Contract or project to which it relates must not be made without prior written State approval, and then only in accordance with the explicit written instructions of the State.

48. **Website Incorporation.** The State is not bound by any content on Contractor's website unless expressly incorporated directly into this Contract.

49. **Order of Precedence.** In the event of a conflict between the terms and conditions of the Contract, the exhibits, a purchase order, or an amendment, the order of precedence is: (a) the purchase order; (b) the amendment; (c) Exhibit A; (d) any other exhibits; and (e) the Contract.

50. **Severability.** If any part of this Contract is held invalid or unenforceable, by any court of competent jurisdiction, that part will be deemed deleted from this Contract and the severed part will be replaced by agreed upon language that achieves the same or similar objectives. The remaining Contract will continue in full force and effect.

51. **Waiver.** Failure to enforce any provision of this Contract will not constitute a waiver.

52. **Survival.** The provisions of this Contract that impose continuing obligations, including warranties and representations, termination, transition, insurance coverage, indemnification, and confidentiality, will survive the expiration or termination of this Contract.

53. **Entire Contract and Modification.** This Contract is the entire agreement and replaces all previous agreements between the parties for the Contract Activities. This Contract may not be amended except by signed agreement between the parties (a "**Contract Change Notice**").

STATE OF MICHIGAN

Contract No. 071B550010

EXHIBIT A
STATEMENT OF WORK
CONTRACT ACTIVITIES

Optional use, multi-year contract for winter maintenance truck build-up components

Requirement
1.1 Manuals
Contractor will provide two sets of operating, maintenance and parts manuals with each component at the time of delivery.
1.2 Warranties
Contractor will provide a one-year warranty on all components, including parts and labor, or manufacturer's warranty whichever is greater. Gear motor for Item #4 shall have a minimum three (3) year non-prorated warranty against defects and wear out. Warranty shall be provided by factory trained technicians at a Michigan dealership.
All warranties begin at in service date of the component.
1.3 General Workmanship
Workmanship is expected to be of high quality throughout in accordance with acceptable industry-wide practice and, where applicable, to meet all FMVSS, OSHA, MIOSHA, and ANSI standards.
2. Service Levels
2.1 Time Frames
All Contract Activities must be delivered within **150** calendar days from receipt of order. The receipt of order date is pursuant to Section 2, Notice provisions of the Standard Contract.
2.2 Delivery
Delivery will be expected within **150** calendar days upon date of order (180 days for DVS bodies). Delivery shall be to the Fleet Operations Garage, 2522 W. Main Street, Lansing, Michigan, 48917. Hours of operation for deliveries will be between 7:30 AM to 2:30 PM, Monday through Friday except Holidays. **Contact: Program Manager or designee at least 48 hours before delivery.**
2.3 Meetings
Within 30 days of the purchase order date the Contractor is to meet with Program Manager or designee in Lansing to provide a written progress schedule and completion date for the work and to review terms and requirements for each purchase order.
The State may request other meetings as it deems appropriate.
3. Staffing
3.1 Contractor Representative
The Contractor Representative is: **Dan Bouwman – President** **6726 Hanna Lake Ave SE, Dutton, MI 49316** **Phone: (616) 698-8215** **dbouwman@ttspec.com** This individual is specifically assigned to State of Michigan accounts, that will respond to State inquiries regarding the Contract Activities, answering questions related to ordering and delivery, etc.
3.2 Customer Service Toll-Free Number
The Contractor's toll-free number is. **1-888-200-8146 (Dutton MI. location)** or **1-855-710-3855 (Howell MI. location)**. The Contractor Representative must be available for calls during the hours of 8 am to 5 pm EST.
3.3 Disclosure of Subcontractors
The Contractor will not be using subcontractors.

4. Pricing
4.1 Price Term
Pricing is firm for a 365 day period ("Pricing Period"). The first pricing period begins on the Effective Date. Adjustments may be requested, in writing, by either party and will take effect no earlier than the next Pricing Period.
4.2 Price Changes
Adjustments will be based on changes in actual Contractor costs. Any request must be supported by written evidence documenting the change in costs. The State may consider sources, such as the Consumer Price Index; Producer Price Index; other pricing indices as needed; economic and industry data; manufacturer or supplier letters noting the increase in pricing; and any other data the State deems relevant. Following the presentation of supporting documentation, both parties will have 30 days to review the information and prepare a written response. If the review reveals no need for modifications, pricing will remain unchanged unless mutually agreed to by the parties. If the review reveals that changes are needed, both parties will negotiate such changes, for no longer than 30 days, unless extended by mutual agreement. The Contractor remains responsible for Contract Activities at the current price for all orders received before the mutual execution of a Change Notice indicating the start date of the new Pricing Period.
5. Ordering
5.1 Authorizing Document
The appropriate authorizing document for the Contract will be individual purchase order(s).
5.2 Order Verification
The Contractor must have internal controls to verify abnormal orders and to ensure that only authorized individuals place orders.
5.3 Delivery
5.3.1 Delivery Programs
All deliveries shall be FOB Government premises with PPD freight
5.4 Packaging and Palletizing
Packaging must be optimized to permit the lowest freight rate. Shipments must be palletized whenever possible using manufacturer's standard 4-way shipping pallets.
6 Acceptance
6.1 Acceptance, Inspection and Testing
Any Purchase Order that is for more than one unit the Contractor will be required as part of this order to provide subsistence and transportation for **three (3)** MDOT personnel to inspect **(Pilot Model Inspection)** and approve the first completed unit constructed, before production begins on the balance of the order. The date and time of inspection shall be agreed upon by the vendor and MDOT.
The following criteria will be used by the State to determine Acceptance of the Services or Deliverables provided under this SOW: Winter Maintenance Truck Components are inspected for compliance with the specification in section 10 and approved or rejected upon delivery.
7. Invoice and Payment
7.1 Invoice Requirements
All invoices submited to the State must include: (a) date; (b) purchase order; (c) quantity; (d) description of the Contract Activities; (e) unit price; (f) shipping cost (if any); and (g) total price.
8. Additional Requirements
8.1 Environmental and Energy Efficient Products
The Contractor must identify any energy efficient, bio-based, or otherwise environmental friendly products used in the products. Contractor must include any relevant third-party certification.
8.2 Hazardous Chemical Identification
In accordance with the federal Emergency Planning and Community Right-to-Know Act, 42 USC 11001, *et seq.*, as amended, the Contractor must provide a Material Safety Data Sheet listing any hazardous chemicals, as defined in 40 CFR §370.2, to be delivered. Each hazardous chemical must be properly identified, including any applicable identification number, such as a National Stock Number or Special Item Number. **The Contractor shall provide all current SDS to the Contract Compliance Inspector (CCI) 2 weeks prior to delivery.**

8.3 Mercury Content

Pursuant to MCL 18.1261d, mercury-free products must be procured when possible. The Contractor must explain if it intends to provide products containing mercury, the amount or concentration of mercury, and whether cost competitive alternatives exist. If cost competitive alternatives do not exist, the Contractor must provide justification as to why the particular product is essential. All products containing mercury must be labeled as containing mercury.

8.4 Brominated Flame Retardants

The State prefers to purchase products that do not contain brominated flame retardants (BFRs) whenever possible. The Contractor must disclose whether the products contain BFRs.

9. Liquidated Damages

The delivery of units must be consistent with the scheduling as established within the Purchase Order. If any units are not delivered within the delivery schedule specified, the delay will interfere with the build-up and implementation of the winter maintenance fleet and fleet management programs utilizing these vehicles, to the loss and damage of the State of Michigan. From the nature of the case, it would be impracticable and extremely difficult to fix the actual damage sustained in the event of any such delay. The State of Michigan and the Contractor, therefore, agree that in the event of any such delay, the amount of damage which will be sustained from a delay will be the amount set forth in Paragraphs A & B. They agree that in the event of such delay, the contractor shall pay such amounts as liquidated damages and not a penalty. The State of Michigan as its option for amounts due as liquidated damages, may deduct such from any money payable to the Contractor or may bill the Contractor as a separate item.

A. If the Contractor does not deliver the units before the delivery date scheduled, the Contractor shall pay to the State of Michigan fixed and agreed, liquidated damages, for each calendar day between the due date and the date the units are received, but not more than 30 calendar days. In lieu of all other damages due to such non-delivery, an amount of 2/10th of 1% of per unit cost of the Purchase Order for each unit that is not delivered by the delivery date.

B. If the Contractor delivers the units before the delivery due date specified and the units do not comply with the Purchase Order Specifications and therefore are not ready for the build-up operation, the State of Michigan may, at its options, delay the implementation of the units into fleet build-up operation. The Contractor shall pay to the State of Michigan, as fixed and agreed liquidated damages in the amount of 2/10 of 1% of the Purchase Order Unit Cost, per Unit, for each calendar day beginning from the delivery date scheduled in the Purchase Order, and the date the unit is accepted as being in compliance with Purchase Order Specifications, but not more than 30 calendar days.

9.1 Force Majeure

Exception. Except with respect to defaults of subcontractors, the Contractor shall not be liable for liquidated damages or breach of contract when delays arise out of causes beyond the control and without the fault or negligence of the Contractor. Such causes may include, but not be restricted to, acts of God, or of the public enemy, acts of the State in either its sovereign or contractual capacity, fires, floods, epidemics, quarantine restrictions, strikes, freight embargoes, or unusually severe weather; but, in every case, the delays must be beyond the control and without the fault or negligence of the Contractor. If the delays are caused by the default of the subcontractor, and if such default arises out of causes beyond the control of both the Contractor and subcontractor and without the fault or negligence of any of them, the Contractor shall not be liable for liquidated damages or breach of contract for delays, unless the supplies or services to be furnished by their subcontractors were obtainable from other sources in sufficient time to permit the Contractor to meet the required performance schedule. If immediate performance is necessary to ensure public health and safety, the State may immediately contract with a third party.

10. Specifications

ITEM 1 - SPECIFICATION #04-PREWET.C14

PRE-WET SYSTEMS – (Make/Model) Monroe/LDS or equal

GENERAL SUMMARY

The following specification is for ground speed controlled pre-wet systems to be mounted on MDOT winter maintenance trucks. The items specified are the latest model in current production, satisfactory to meet the performance and design characteristics required in this specification. They shall be built in accordance with all FMVSS, OSHA, MIOSHA, and ANSI standards.

- Pre-wet liquid pump shall be directly coupled to the hydraulic motor
- Pre-wet pump shall be capable of 7gpm and constructed with a built in system relief valve
- Pre-wet pump shall be constructed with bronze type gears
- Pre-wet pump/motor shall be mounted inside a NEMA type enclosure with a hinged door for access
- A Dickey-john flow meter shall also be mounted in the enclosure
- Stainless steel hydraulic lines for the pump motor shall be plumbed to bulkhead fittings mounted on the side of the enclosure
- Pre-wet pump system shall have a poly check valve to be mounted in the discharge line to the spray nozzles

Pre-wet systems shall include a nozzle kit including:

a. Three (3) 2gpm spray nozzles
b. All necessary hoses and fittings
c. Stainless steel guards to be installed with the nozzles

- Liquid tanks shall be 100 gallon minimum capacity for combination body trucks and 100 gallon capacity for slide-in V-box bodies
- Each body shall be equipped with twin tanks and shall be fitted with an equalizing hose between tanks
- Tanks shall be fitted with 2 inch cam-lock fittings for bulk filling
- Tanks shall be constructed of 3/8 inch wall rotationally molded polypropylene and shall have built in baffles
- Each tank shall have a minimum 3 inch fill opening at the top
- Tanks shall fit existing MDOT combination bodies and slide in material spreaders
- Tanks shall be fitted with the proper poly type tank vents
- Discharge fittings shall be molded type
- Spin welded or flange type fittings shall **NOT** be acceptable
- Tanks shall be provided with stainless steel mounting brackets and all necessary stainless steel hardware and attachments
- Tank kits for the combination bodies and the slide in bodies shall include a one (1) piece stainless steel tray that is as long as the tank
- The V-box kits shall include brackets that bolt directly to the V-box cross members
- A stainless steel pump enclosure mounting bracket shall be supplied with pre-wet system
- A bulk fill kit with poly cam-lock fittings and poly shut-off valve shall be provided
- A flusher kit consisting of a poly directional ball valve and a separate suction hose shall also be provided to be installed in the liquid supply line from the tank to the pump
- Quick disconnect poly cam fitting kits shall be supplied for the liquid discharge line to the spinner

ITEM 2 - SPECIFICATION # HYDTANK.C14

FUEL TANK AND HYDRAULIC RESEVOIR ASSEMBLY – (Make/Model) Monroe/FOT-120-35 or equal

GENERAL SUMMARY

The following specification is for fuel tank and hydraulic reservoir assemblies. All specifications contained herein are considered minimum and must be met

- Tank shall be a combination diesel fuel, hydraulic oil and hydraulic valve enclosure behind the cab style unit with mounting feet and angle truck frame mounting brackets
- The combination tank/enclosure shall have mounting feet designed to support the weight of a full fuel tank, a full hydraulic oil tank and a fully assembled hydraulic valve assembly
- The fuel/oil tank shall have continuous welded seams throughout. The integrated valve enclosure shall be in the lower driver side beneath the fuel tank fill. The integrated valve enclosure shall have a stainless steel valve mounting plate bolted in the base and a removable access door equipped with “T” handle latches
- Tank truck frame mounting brackets shall be 4 inch x 12 inch x 17 inch x ½ inch angle with four gussets and an 8-½ inch wide x 7-½ inch cutout for access to the bottom of the tank
- Top of the angle bracket shall have two (2) elongated holes 1-½ inch long x 11/16 inch wide
- There shall be four (4) round rubber sandwich mounts to fasten the tank/enclosure assembly to the truck frame mounting brackets. The sandwich mounts shall be secured with a 5/8 inch grade 8 bolt through the center and be made of fuel resistant rubber
- Tank /enclosure assembly shall have all metal surfaces pre-cleaned and prepped prior to applying black powder coat
- Fuel/oil tank/enclosure and the removable enclosure door shall be powder coated black in color
- Fuel capacity shall be 115 gallons minimum
- Hydraulic oil reservoir shall be 30 gallons minimum
- Preferred model is Monroe 00140316 or approved equal
- Approximate overall dimensions shall be 34 inches tall x19 inches wide x 80 inches long
- Construction shall be of pickled and oiled, #7 gauge steel
- Each tank shall have a magnetic drain plug, be pressure tested for leaks, and be FHWA labeled

- Hydraulic tank shall have installed, one (1) Zinga RF-1618-S-25-EP15-0 tank top mounted return filter with bypass, bolted and gasketed

Hydraulic tank shall have:

a) Screen in the fill
b) Lockable breather cap with filtered vent
c) 3 inch NPT flange for suction outlet
d) Steel suction strainer (Zinga #2030-3 or D equivalent) with a 2 inch NPT ID
e) Combined level/temperature gauge mounted on outside end of tank approximately 6 inches from the top of the reservoir to the top hole in the gauge
f) One (1) 1-1/16-12 straight thread fitting in bottom

- Fuel/hydraulic tanks shall be delivered clean with no contamination particles in excess of 5 microns
- Fuel tanks shall have a pickup sump 6 inch x 6 inch x 3 inch with three (3) ¾ -16 straight thread fittings, one out the bottom and two out the front.
- Fuel tank shall be shipped with sending units for fuel level, shipped loose, and standard baffles within the tank
- Fuel sending units shall be ISS PRO RA9531-ISS-LP
- Fuel tanks shall have ball check vent on top of the tank and a male safety filler cap with chain
- valve enclosure shall have a wire access hole 5 inches wide by 2-½ tall located approximately 6 inches in from the outside edge and 5 inches up from the bottom
- Access hole shall have a plate to be attached with four (4) 5/16 inch bolts and nuts, 6-½ inches wide by 4 inches tall with two (2) 7/8 inch holes and one (1) 1-1/16 hole for wiring access
- Enclosure shall have a stainless steel hydraulic valve mounting plate cutout to fit the current MDOT hydraulic valve and attached to enclosure with fourteen (14) 3/8 inch bolts and nuts
- Bottom of valve enclosure shall be cutout to accommodate the hydraulic valve mounting plate
- A 3/16 inch x 2 inch stiffener shall be welded vertically to the underside of the valve enclosure opening and shall have two (2) 7/16 inch elongated holes centered 1-1/8 inch and 4-1/8 inches in from the left edge, both front and back for step installation

Wire tie-downs constructed from 3/16 inch thick, 1 inch x 1 inch with 5/16 inch hole in center shall be located:

A. Back:

a. Four (4) welded vertical, 36 inches in from left edge with holes centered at 4, 12-1/2,21, 29-1/2 inches up from bottom of tank
b. Four (4) welded vertical, 12-1/2 inches in from right edge with holes centered at 4, 12-1/2, 21, 29-1/2 inches up from bottom of tank

B. Front:

a. Four (4) welded vertical, 12-1/2 inches in from right edge with holes centered at 4, 12-1/2, 21, 29-1/2 inches up from bottom of tank
b. One (1) welded horizontal, with hole centered 3-1/2 inches in from right edge 1inch up from bottom of tank
c. Four (4) welded horizontal, 4 inches up from bottom of tank with holes centered at 25-1/2, 40, 54-1/2 inches in from right edge

- 3/16 inch thick 4 inch x 1-1/2 light mounting plate shall be welded to the bottom of the tank, 4-1/4 inches back from front edge and ½ inch in from right edge with two (2) 5/16 holes on 3 inch centers, ½ inch in from front and rear edges and ¾ inch up from bottom
- Step fabricated from 9-1/2 inch deep by 18 inch wide expanded metal step material with “L” shaped plates on each end to be mounted on the left side of tank assembly to stiffener and have 5 inch wide mounting surface with three (3) sets of mounting holes 3 inches on center horizontally and 2 inches on center vertically shall be provided
- Step shall have a light mounting bracket 3/16 inch thick x 1-1/2 inch x 2-1/2 welded to the inside of the front “L” shaped plate at the bottom with ½ inch hole centered ¾ inches in from the inside end

2. A. LOW OIL ALERT

- A Compac Erecta Switch low oil sensor shall be provided and installed in the hydraulic tank
- A 1-¼ inch NPT fitting shall be located in the top of the hydraulic tank for the low oil sensor
- The low oil level sensor shall be normally open, low oil level in the tank will cause the sensor to close

2. B. FILTRATION

- A Zinga RF-1618-S-25-EP15-0 tank top mounted return filter with a 1-¼ inch straight thread port and a 25psi electronic bypass switch to indicate if the filter goes to bypass condition
- Bypass switch shall be Force America PS-25-WP
- Filter unit shall have a pressure drop of less than 3psi @ 40gpm with 150 SSU oil
- Filter unit shall have a 1-½ inch NPT port out the bottom of the canister and extended drop tube
- Two Zinga RE409-10 or equivalent replacement elements shall be furnished

ITEM 3 - SPECIFICATION # GRDSPD.C14

Ground speed oriented salt distribution spreader control systems with electric over hydraulic joystick controls – (Make/Model) Dickey-John/Control Point & Flex4 or equal

GENERAL SUMMARY

The following specification is for ground speed oriented salt distribution systems and electric over hydraulic joystick controls to be installed by MDOT. These systems will be used in conjunction with a closed center valve and load sense/pressure compensated piston pump, to be supplied by MDOT. The system is designed to control the salt and liquid distribution of MDOT winter maintenance trucks. All units will be equipped to control pre-wetting systems with granular spreaders. Electric over hydraulic joysticks are to control the underbody scraper up/down, left/right, front plow up/down, left/right, dump body and mid-mount wing up/down. Spreader functions shall be ground speed controlled with in-cab display and control. The control must be capable and wired for the pre-wetting system. All specifications contained herein are considered minimum and must be met. They shall be built in accordance with all FMVSS, OSHA, MIOSHA, and ANSI standards.

3.A. REMOTE VALVE CONTROLS

- Remote valve joystick controllers shall be located in the cab of the truck, within easy reach of the driver, mounted on a console unit to be supplied by MDOT
- Joystick controllers shall have the capability to provide proportional control to the hydraulic pulse width modulated (PWM) valves
- The microprocessor controlled valve drivers shall be located within the base of the joystick controllers
- Approximate controller base dimension shall be 4 inches x 4 inches
- Controllers shall have a user selectable interface to be compatible with a Rexroth model M4 hydraulic valve
- Controllers shall be mounted in a modular base that accepts one to three controllers and be available in a dual or single gated axis configuration
- Power shall be introduced into the first controller and then feed from the first controller to the second controller and continue on

3. B. SINGLE AXIS CONTROLS

- Single axis controller shall have a single push button, red in color, that is mounted in the joystick handle
- Red button shall serve as a safety lockout, whereas output from the control will not activate without first depressing the push button
- All other components shall be black in color
- Controller shall contain a microprocessor with two control channels and the stick shall be gated such that the handle only moves in one axis (front to back)
- Controller shall be user selectable to provide PWM signal outputs of 50, 100, 150, and 250Hz for PWM valves
- Electrostatic discharge and electromagnetic interference protection shall be provided
- Single axis joysticks shall control both the dump body and the wing, if so equipped, with the use of a covered toggle switch provided by MDOT
- Dual axis controllers shall be mounted in the modular base with all components black in color
- Controller base shall contain a microprocessor with four control channels
- Controller shall have a float mode available, in that the front PWM signal will be engaged at 100% until the user activates the rear PWM signal
- Float mode will only be used with float compatible hydraulic systems as a loss of steering may result
- Controller shall be gated so that only one channel can be activated at a time except when in float, which allows the front axis and left or right channel to be activated at the same time
- Controller shall be user selectable to provide PWM signal outputs of 50, 100, 150, and 250Hz for PWM valves
- Electrostatic discharge and electromagnetic interference protection shall be provided

3. C. BASE PLATE

- Standard base plate shall be able to accommodate up to three (3) of the modular joystick controllers
- Base plate shall fit on top of MDOT supplied console that will be mounted in truck cab
- MDOT supplied console shall and base plate shall be reviewed at the preconstruction meeting
-

3. D. GROUND SPEED SYSTEM I (GSS I)

- System shall have the capability to maintain a uniform application rate of granular deicing materials and liquid materials simultaneously (based on granular output)
- System shall have the capability of being used as a liquid only control and monitor boom shutoff inputs
- System shall have the flexibility of closed loop control of the spinner in order to maintain a desired spinner RPM or spread width

3. E. GSS I – CONSOLE

- Control console shall have an easy to read dot matrix display which is capable of displaying a minimum of two (2) control channel application rates, ground speed, spread width, time/date, gate height, liquid level, simultaneously
- Control console shall contain a microprocessor and have a minimum of three (3) closed loop control channels
- One control channel shall be used for application of granular material on a pounds (kilograms) per mile (kilometer) or area based (pounds per square foot/grams per square meter)
- A second channel shall be used for control of liquid material on a gallons (liters) per ton based on the granular application rate or gallons (liters) per mile (kilometer) and gallons (liters) per square yard (meter)
- A third channel will be used for controlling the spinner speed and be capable of utilizing a feedback sensor to close the loop in order to maintain a desired spinner rpm and a spread width
- Console shall have no more than one (1) switch on the front panel which is used to cycle display screen from operate, view accumulators, select materials, and turn the unit on or off

Console shall have sufficient memory capable of recording the following information and display as current run totals and season totals:

a) Miles(kilometers), tons (metric/English), and gallons (liters) spread while in automatic control mode
b) Miles(kilometers), tons (metric/English), and gallons (liters) spread while in BLAST mode
c) Total miles (kilometers), tons (metric/English), and gallons (liters) spread in automatic control mode
d) Total vehicle miles (kilometers) driven
e) Liquid gallons (liters) sprayed during pre-wetting and anti-icing applications
f) Real time spent spreading granular, spraying liquid, and blasting

Console shall also record system information which includes:

a) Time and date event recording of application rate history indicating when truck was started and turned off, type of materials spread, and application rates that were selected by the operator
b) Time and date event recording of alarm history indicating when control system was operating in an error condition (application error, manual override, or loss of feedback sensor)
c) Time and event recording of vehicle maximum speed alarm set point being exceeded
d) Time and date event recording of on/off history indicating when control was in automatic control mode versus off as well as when blast function was activated

- Control console will automatically adjust the amount of granular material being applied when the closed loop spinner is in operation and the spread width knob setting is increased or decreased, this shall provide for spreading granular material in pounds per lane mile or pounds (kilograms) per square yard (meter)
- Control console shall have visual display of when unit is operating in application rate error, unload or blast condition, manual speed and automatic manual override condition, and built in ground speed simulator
- Truck ID can be entered into the unit that has a unique code for each truck
- This ID would also show up on the DaRT Reports so that data tracking can be done on an entire fleet of trucks
- Console shall have the capability of being switched from English units to metric units as well as multiple languages
- For **Combination Body trucks**, units shall have EPC control for speed of cross conveyor and two (2) position switch to control direction
- A two (2) position switch to control main conveyor direction and spinner shall be provided
- This switch shall be wired into the main controller to maintain ground speed control
- Unit shall be programmable for at least four (4) types of material, four (4) liquids, and capable of controlling pre-wet and anti-icing with boom controls without changing consoles or modules
- Wiring for operation of pre-wet valve shall be included with all units
- Units shall include a two (2) year warranty on the processor and console
- Data logging information shall be available for download through a handheld device capable of holding up to 25 truck downloads, easily attachable to the unit via a cable permanently attached to the unit with information that can be formatted with standard Windows™ programs
- **APPROVED DEVIATION: Data logging is not available via a handheld. It is available via wireless**
- Unit shall be capable of Low Hopper Level Warning to alert the operator of a low level of material in the hopper **(Low Level Sensor will not be provided in this specification, the capability will be for future options or upgrades.** Unit must be wired accordingly for this option)
- Controller shall beep and flash a warning to the operator
- Console shall be programmed with a detachable keyboard with menu driven screens to aid in programming process
- Keyboard shall be removable after programming is complete which eliminates the need of lockout codes or keys

Console calibration mode:

a) Automatic calibration procedures for granular and liquid channels to determine the granular spreader constant of conveyor/auger and liquid sprayer constant of flow meter

b) Ground speed calibration procedure in units of 1 mile or 1 kilometer
c) Dual ground speed axle calibrations will allow users with dual axles to calibrate both and use both constants for ground speed
d) Programmable operation frequency of PWM valves from 20 to 250Hz
e) Automatic calibration procedure that will determine the PWM offset and saturation points of valve as well as system gain and enter into the console's memory
f) Programmable blast timed button or on/off when blast button is pressed and then released
g) Spinner calibration procedure to allow for open loop operation of spinner to coordinate spread width knob position with a specific spread width for lane mile application of material
h) Calibration procedures shall only be accessible with plug in programmable keyboard

Console programming features:

a) Program independent application rates for up to four (4) separate granular materials and four (4) separate liquid materials
b) Application rates may be preset for ten fixed rates or to expand application rate choices, a preset minimum rate, preset maximum rate and rate change increments between
c) A blast application rate is provided for each material for control of the blast function
d) All of the granular and liquid materials can have user defined labels to aid in easy selection of the correct material by the operator
e) Reset of granular current and season accumulators
f) Reset of liquid current and season accumulators
g) Ability to lockout granular and liquid materials availability in the operate mode
h) Program the console for use as a granular and liquid material control, a liquid only control, or a granular only control
i) When liquid only control is selected, the operate screen automatically configures itself and displays a five (5) segment boom shutoff graph
j) All programming features are only accessible with plug-in keyboard
k) Capability to program console for automatic switch of liquid materials from pre-wet (gal/ton) to liquid only (gal/lane mile) for anti-icing
l) Material flow/hopper level input alarm has a user defined text for the alarm allowing for various types of sensors or inputs to be used and the text can be changed to fit each application
m) Have provisions to work with a low oil level sensor connected to a normally open, energize to close, solenoid operated control valve, actuated by the closing of a ground connection through the sensor, to automatically shutoff pump pressure (also connected to a light on the console to alert operator)

3. F. GSS I - OPERATOR REMOTE SWITCH MOD.

A remote switch module shall be used for operator convenience which contains switches to:

a) Power liquid and granular channels on or off individually
b) Allow liquid and granular application rates to be increased or decreased separately
c) Provide a momentary push button switch used for blast mode
d) Master spreader switch for off, automatic and unload of granular, liquid, and spinner channels
e) Provide a twenty position rotary knob for adjustment of spinner speed

- Remote switch module shall be backlit for visibility and use during night operation
- Remote switch module shall allow operator to select materials to be applied
- **Hydraulic valves (MDOT provided) have pulse width modulated dual control valves to control hydraulic flow to spinner and conveyor motors.**
- Modulated valve drivers for adaptation to various pulse width modulated valves shall be provided
- Unit shall be compatible with Hall Effect conveyor feed rate sensored hydraulic motors (MDOT provided) with at least 50 pulses per revolution of motor
- Vehicle speed sensor will be provided by a cable to adapt to vehicle electronic speed sensing device
- Conveyor feed rate sensor adapter cable shall be provided with LED indicator lights
- Flow meter shall be provided for accurate measurement of liquid sprayed
- A modulated valve driver (20amps) shall be provided to drive PWM hydraulic valve for desired volume of liquid application rate
- System shall have in line ball valve control capability available in ½ inch, ¾ inch, 1 inch, and 2 inch sizes
- System shall have the capability to maintain a uniform application rate of up to three (3) individual products simultaneously in any combination of granular and liquid deicing materials
- This combination can include two (2) granular and one (1) liquid or two (2) liquid and one (1) granular
- The liquid application units shall be selected as either pre-wet (gallons/ton) or anti-icing (gallons per lane mile) or for summer time application along roadside of gallons/acre, gallons per square yard
- System console shall have the integrated boom section control capable of controlling up to six (6) boom section shut offs
- System shall have the flexibility of closed and open loop control of the spinner in order to maintain a desired spinner rpm or spread width Display terminal, master control module, member control module, and remote switch unit shall communicate via a CAN BUS using the J1939 interface protocol

- Display terminal shall also have a second CAN BUS to link into the vehicle on-board CAN BUS
- Control channel drivers shall consist of either 4 PWM, or 2 PWM and 2 servo channels
- Channels 1-3 can be used for applications of granular material on a pounds (kilograms) per mile (km) or area based (pounds per square foot/grams per square meter), liquid material on a gallons (liters)per ton based on a granular application rate or gallons (liters) per mile (km) and gallons (liters) per square yard (meter)
- Channel 4 shall be used for controlling the spinner speed and be capable of utilizing a feedback sensor to close the loop in order to maintain a desired spinner rpm and spread width
- Channel 5 (relay driver output controlled) shall be used to drive a linear actuator or hydraulic valve section to position the gate height on spreader
- Control channels can be programmed for manual control of operation allowing for operating hydraulic tools other than used in snow and ice control operations
- Data logging, wireless communication, and GPS input events shall be stored, processed and transferred as a formatted file and located in the terminal
- All events of driver operation of the system shall be time and date stamped creating a data log of spreading events (rate change, switch on/off history, and alarms), material spread totals, miles spread totals, blast activation, pause activation, auto control, driver identification, and route identification
- Each event shall also be tagged with a GPS X/Y coordinate for determining location of the individual event
- All logged data events shall be packed into a single xml formatted file before transferred to a modem of third party AVL device
- Operator remote switch module, member module, and master control module shall act as slave devices on the system
- Display terminal shall consist of a 7 inch thin film transistor transmissive color display
- Backlighting of terminal shall automatically adapt to ambient light via a light sensor
- Display terminal shall have twelve (12) hard keys, six (6) on left and right with varying functions for operator access to information and selection of material application, control channel on/off, route, driver ID, material usage, camera view, and access to manual ground speed

<u>Terminal shall provide simultaneous viewing of:</u>

a) Three (3) control channel application rates
b) Ground speed
c) Spread width
d) Time/date
e) Four (4) accessory inputs
f) Plow selection

- Terminal shall have the capability to display a camera input video and three (3) control channel application rates simultaneously
- Display terminal shall contain a microprocessor and a memory to send operation commands to a minimum of four (4) control channels simultaneously
- One control channel shall be used for application of granular material on a pounds (kilograms) per mile (km) or area based (pounds per square foot/grams per square meter)
- Second control channel shall be used for control of liquid material on a gallons (liters) per ton based on the granular application rate or gallons (liters) per mile (km) and gallons (liters) per square yard (meter)
- Third control channel shall have the flexibility to be used as either a liquid or granular channel with same units available as channel one or two
- Fourth control channel shall be used for controlling the spinner speed and be capable of utilizing a feedback sensor to close the loop in order to maintain a desired spinner rpm and spread width

<u>Display terminal shall have sufficient memory capable of logging and recording the following information:</u>

a) Total miles (km), tons, (metric/English) and gallons (liters) spread while in automatic control for each control channel and product spread
b) Miles (km), tons (metric/English) and gallons (liters) spread while in blast mode for each product spread
c) Total vehicle miles (km) driven
d) Liquid gallons (liters) sprayed during pre-wetting and anti-icing application
e) Total time spent spreading granular, spraying liquid, and blasting
f) Miles (km), tons (metric/English), and gallons (liters) spread while in pause mode
g) All of this information shall be viewable on the display terminal as current run totals and season totals to the operator/supervisor

<u>Display terminal shall also record system information including:</u>

a) Time and date event recording of when truck was started and turned off, type of materials spread, and application rates selected by the operator
b) Time and date event recording of when control system was operating in an error condition (application error, manual override,

loss of feedback sensor)

c) Time and date event recording of vehicle maximum speed alarm set point being exceeded

d) Time and date event recording of when control was in automatic mode of control versus off as well as when blast and pause functions were activated

- When the closed loop spinner is in operation and the spread width knob is increased or decreased, the control console shall automatically adjust the amount of granular material being applied, which shall provide for spreading granular material in pounds (kilograms) per square yard (meter) units of application
- Display terminal shall have visual display and/or audible alerting operator of when unit is operating in application rate error, unload or blast condition, pause mode, manual speed, and automatic manual override condition
- Display terminal shall have an integrated manual ground speed simulator for use when speedometer sensor fails or stationary testing or spreading is required
- Display terminal shall have capability of changing all application, distance, and vehicle speed units from English units to metric units as well as supporting multiple languages such as French and English

<u>A remote switch module shall be used for operator convenience which contains:</u>

a) Multiple independent switches to allow liquid and granular application rates to be increased or decreased

b) Blast switch

c) Pause switch

d) Master spreader switch for material application auto/off

e) Rotary knob for adjustment of spinner speed with unlimited detents and rotation

- Remote switch module shall be backlit for visibility and use during night operation and be capable of being mounted next to display terminal, driver seat arm rest or on side of electronic joystick hydraulic controller
- Master control module (ECU) shall be connected to the display terminal via a CAN BUS using the J1939 protocol
- ECU shall contain the control channel algorithms, electronic driver devices to control the signal output for PWM hydraulic valve, servo valves, electronic pumps, and switching valves to control the desired liquid and granular material application rates, spinner speed, and spread width
- All input sensors for monitoring application rates (360 pulse per revolution shaft sensors), liquid flow meters, accessory monitoring sensors (gate height, electronic joystick, functions, hydraulic pressure sensors, rpm sensors, position sensors) shall be connected directly to the ECU
- An optional member output module shall be connected to the master control module via a CAN BUS using J9139 interface protocol to drive additional accessories installed on the vehicle such as boom section shut off valves, open and close V-box gates, switching valves for front/rear conveyors, switch valves for left/right discharge cross augers and accessory 12 volt switched output

<u>Granular application control:</u>

a) Compatible with pulse width modulated hydraulic valves used to control hydraulic oil flow to auger and conveyor motors

b) High current solenoid interface driver to operate electric motor drive augers and spiners

c) Input from Dickey-john photoelectric conveyor feed rate sensor with 360 counts per revolution

d) Compatible with hydraulic motors with integrated feed rate sensors signal generators

<u>Liquid Application Control:</u>

a) Input from liquid flow meters for accurate measurement of liquid flow from pump and application sprayed

b) High current solenoid interface driver (20amps) to drive liquid pump for desired volume of liquid application rate

c) Compatible with servo control ball valves for liquid application control available in ¼ inch, 3/8 inch, ½ inch, ¾ inch, 1 inch, 2 inch, and 3 inch sizes

d) Compatible with pulse width modulated hydraulic valves used to control hydraulic oil flow to hydraulic motors driving liquid pumps delivering product to pre-wet and anti-ice spray booms

e) Input from electronic pressure transducer for pressure based liquid control as alternate to flow meter measurement based control

- Display terminal and system shall be programmed with a detachable keyboard and shall have a minimum of twelve (12) menu driven set up screens to aid in programming process
- F1 through F12 function keys on the keyboard shall be used to access the 12 set up menus
- To eliminate the need for lock-out codes or keys the system shall not allow entry of set up menus, calibration, or configuration without a keyboard attached

Vibration mode:

a) Automatic calibration procedures for granular and liquid channels to determine the granular spreader constant of conveyor/auger and liquid sprayer constant of flow meter
b) Ground speed calibration procedure requiring driving the vehicle a distance of 1 mile or 1 kilometer
c) Programmable frequency of pulse width modulated valves from 20 to 250 hertz
d) Automatic calibration procedure which shall enter the hydraulic valve PWM offset and saturation points as well as appropriate system response (gain) and enter into the display terminal history
e) Programmable blast switch timer or on/off only when blast switch is pressed and then released
f) Spinner calibration procedure to allow for open loop or closed loop operation of spinner to coordinate spread width knob position with a specific spread width for lane mile application of material
g) Calibration procedures shall only be accessible with plug in programmable keyboard

Programming mode for entering application rates and resetting accumulators:

a) Program independent application rates for up to four (4) separate granular materials and four (4) separate liquid materials
b) Application rates may be preset for ten (10) fixed rates or to expand application rate choices, a preset minimum and maximum rate and rate change increments can be selected
c) A blast application rate is provided for each material for rate control of the blast function
d) Reset of granular current and season accumulators
e) Reset of liquid current and season accumulators
f) Ability to lock out granular and liquid materials availability in the operate mode
g) Program the console for use as a granular and liquid material control, a liquid only control or a granular material only control
h) When liquid only control is selected the operate screen automatically configures itself and displays a six (6) section boom shut off along left side of terminal
i) The operate screen of the display terminal shall automatically configure itself dependent upon the number of active control channels to fit all active products being applied on display for viewing
j) Programming features shall only be accessible with plug in keyboard

- System shall have an automatic override feature which, in the event of loss of feed rate sensor or flow meter signal, transfers system to open loop control with a “manual” indication flashing next to the appropriate control channel and continue application of material until sensor is required
- System shall have a built in ground speed simulator which can be activated made available to the driver only with the plug in keyboard for override of a failed ground speed sensor or operating the system while stationary without having to raise the rear tires off the ground
- The system shall have the capability of being programmed to allow access to manual speed for the driver to turn on and off
- System shall have the capability to program three (3) control channels as manual mode of operation
- When set as manual mode of control, the control channel will allow for nudging the control valve open and close in 2% PWM increments with the application rate change increase/decrease switches located on operator remote switch module
- Manual mode of control channel shall allow for running accessory hydraulic tools in winter and summer months possibly not associated with winter maintenance activities
- System shall have the ability to unload/flush both granular and liquid materials separately or simultaneously
- Unload/flush shall provide for full spreader and sprayer output
- Console shall NOT accumulate granular or liquid quantities while in unload or flush
- System shall NOT initiate unload or flush unless vehicle ground speed is zero
- After unload or flush is activated, the system shall allow forward movement of vehicle but for not longer than a ten (10) second time period
- After ten (10) seconds console shall override and shut down unload/flush command and return to automatic control
- Spinner shall stop when the spreading of granular material is stopped
- Spinner can be preset to run or be stopped when console is in the unload mode and when ground speed is zero
- Console shall allow a programming option (blast spinner speed) to allow for operating the spinner at a pre-defined rotational speed when the blast button is pressed regardless of current position of spread width knob on remote switch module
- System shall allow the spread of granular material without spraying liquid material
- System shall have an auxiliary control channel that allows flexibility of applying either liquid or granular material that provides for a quick change over when removing a V-box spreader and install a slide in liquid tank for anti-icing with connection to the same hydraulic lines as used with the V-box spreader and utilizing the same hydraulic valve section
- Each of the four (4) liquid materials programmed into console memory shall be able to be set as either gallons (liters) per mile (km) or gallons (liters) per ton units allowing for the liquid channel of console to be used in an anti-icing application and for pre-wetting of granular material without the need for reprogramming
- Console shall have a visual and audio indication of inaccurate application for both granular and liquid channels
- System shall have a programmable start up ground speed which the control will utilize until true ground speed of vehicle exceeds the start up speed value
- System shall have a programmable shut off speed which the control will utilize and shut off the spreading of materials when

the true ground speed of the vehicle drops below the programmed shut off speed

- System shall be able to be used for application of liquid or granular on meters square, yards square, square foot, gallons per acre and lane miles units of measure
- System shall allow for entering a minimum of twenty (20) driver names and identification numbers to allow tracking of materials spread, miles driven, and route spread by driver
- System shall allow for entering a minimum of twenty (20) route identification labels to allow for tracking the specific routes/roads that material has been spread on including total material spread and miles driven

Display terminal ports:

a) Shall provide an RS232 for connection to 3rd party hardware which shall allow the transmission of current operation information and logged data to be exported and/or accessed real time

b) Shall provide a USB port to allow insertion of USB media storage to allow for export of logged spreadsheet data and transfer to lap top computer

c) USB terminal shall allow for import of system firmware updates to display terminal and master control module from USB media storage device

d) USB port on terminal shall allow for import of critical system configuration file which shall provide means to program each display terminal and master control module with pre-determined system calibration values

e) Camera port on display terminal shall display video of remote mounted camera

Note: no camera is included

ITEM 4 - SPECIFICATION # 04-TARPS.C14

Automatic electric tarp assemblies for winter maintenance trucks – (Make/Model) Roll-Rite or equal

GENERAL SUMMARY

The following specification is for 11 foot and 14 foot automatic electric tarp assemblies to be mounted on MDOT Winter Maintenance Trucks. The equipment, parts, materials, and methods must be the latest model in current production, satisfactory to meet the performance and design characteristics required in the specification. They shall be built in accordance with all FMVSS, OSHA, MIOSHA, and ANSI standards.

4. A. TARP

- Tarp shall be made of high quality minimum 18oz material with a urethane coating on both sides
- Tarp shall have a 350° F temperature rating. **(MUST INDICATE COLOR WHEN ORDERING: BLACK MESH OR ASPHALT)**
- Main body of tarp shall be constructed of a single piece of material
- Tarp tube pocket shall be lined with a solid weave material
- Tarp shall have rear corners reinforced by doubling the 18oz material in the corners
- Edges shall be heat welded to bind them
- Any stitching shall be bonded polyester thread
- Tarps shall not have side or tail flaps

4. B. COMPONENT CONSTRUCTION

- Components shall be constructed of 6005 T5 aluminum which exceed the 6061 T6 ratings
- Springs shall be Teflon coated for added rust and wear protection

4. C. ARMS AND SPRINGS

- Tarp arms shall be aluminum extrusions in the shape of a modified oval with two flat sides for maximum strength to weight ratio
- Springs shall be spiral torsion style
- Springs shall be designed for easy replacement without replacing whole arm

4. D. PIVOTS

- Pivots shall be bearing mounted on a 1-¼ inch pin that has been nitro carburized to stop corrosion
- Pivots shall be mounted through the side rail of the body
- Pivots shall be adjustable by simply adjusting hook pin height or by adding/subtracting spiral torsion springs
- Pivot tubes shall be polished, with four (4) springs per side, 84 inches long

4. E. BOWS

- Bow arms shall have 90° corners welded in them
- Bow arms shall be polished

4. F. TENSION BOW

- System shall include gravity powered tarp tensioning bow to assist in holding the tarp down behind cab shield to prevent sailing
- Tension arm shall mount on the main pivot arm; it shall **NOT** attach to the cab shield or main dump body
- Tension bow arms shall have 90° elbows welded in them
- Tension bow arms shall be polished

4. G. TARP SPOOL

- Tarp spool shall include a one piece polished aluminum wind deflector that can be cut to fit any truck
- Ends of wind deflector shall incorporate mounts for strobe lights and drive motor
- Tarp spool shall include a tarp axle with five (5) full length pre-threaded grooves for mounting the tarp
- Axle shall have a Nitro carburized stub shaft to help prevent corrosion between a-similar metals
- Tarp spools shall include all electrical components needed to wire truck for easy in cab operation
- Tarp spools shall be designed so as NOT to trap debris on the cab shield and allow for easy cleaning of cab shield

4. H. TARP DRIVE

- Tarp drive shall have controls mounted in cab
- Tarp drive shall have a 12 volt gear motor
- Tarp drive shall be chrome plated
- Tarp drive shall have a tool steel Nitro carburized output shaft
- There shall be NO chain drives in the construction of the gear motor
- The tarp control system shall include a remote mounted, solenoid controlled, polarity reversing switch, a three position, non-detent control switch, circuit protection, and enough 6 gauge dual conductor wire to extend from the batteries to solenoid switch and to the tarp motor

ITEM 5 - SPECIFICATION # 04-11SSDMP.C14

DUMP BODY, STAINLESS STEEL, 8 cu. yd., 11FT., W/ UNDER BODY HOIST and 1/2 CAB PROTECTOR – (Make/Model) Crysteel/Select Stainless Steel or equal

GENERAL SUMMARY

The following specification is for stainless steel dump bodies, of approximately 8 cu. yd. with an underbody hoist. Each shall consist of a minimum 132 inch length by 87 inch inside width box. Each box shall include an underbody hoist with double acting cylinder, ½ cab protector (attached per MDOT specifications), air operated tail gate latches and designed to accommodate most vertical exhaust stacks without modification. The bodies will have holes pierced and studs mounted per MDOT specifications. MDOT will install this dump box on a 44,000 GVW single axle, cab, and chassis with chassis measurements of approx. 187 inch W.B., 112 inch C.A., and 187 inch C.E.

- Body shall measure 132 inches long, 40 inch high front, 34 inch high sides and tailgate
- Body shall have inside width of 87 inches
- Body shall have outside width of 96 inches
- Capacity shall be approximately 8 cubic yards
- "Body raised" light (supplied by MDOT) shall be activated by an epoxy sealed, magnetic proximity switch, Grainger part # 6C834 or Omron type TL-W20ME2 12V - 24V supplied with each body **No Exceptions**

5. A. FLOOR

- Floor shall be constructed of ¼ inch AR400 plate steel, 180,000 PSI tensile strength and yield of 145,000 PSI
- Floor shall have 9 inch radius wings if ¼ inch A1011 carbon steel at **sides only**

5. B. UNDERSTUCTURE

- Understructure shall be cross-memberless
- All welding shall be continuous
- Fabricated longsills shall be of ¼ inch CQ carbon steel inner panels and ¼ inch CQ carbon steel outer panels
- Interior of longsills shall be coated with rust inhibitor coating at factory
- Rear rubrail shall be full width, fabricated design, 7-gauge 201 stainless steel, **Channel style rear aprons are not acceptable**
- Wiring tie down loop of ¼ inch steel rod shall be installed on the underside of the floor, 3 inches in from the inside of the longsills and 3-¼ inches forward of the rear rubrail and extend the entire length of the underside of the floor

Support plates shall be installed from the rub rails to the floor:

a) open at the front and rear
b) made of A1011 carbon steel
c) notched opening 31-38 inches behind the front corner posts of the body to allow access for tarp arm mounting bracket fasteners

- Longsills shall have 3 inch passageway in the rear of the longitudinals for wiring

5. C. FRONT BULKHEAD & ½ CAB SHIELD

- Front bulkhead shall be constructed of 7-gauge 201 polished stainless steel with pressed in brace for rigidity
- Front of body shall have a 1-¼ inch wiring hole placed in the lower left corner, center to be 1.875 inches from side and 2 inches up from lower edge
- ½ cab shield shall be 100% welded to the front bulkhead at the factory per MDOT measurements
- ½ cab shield shall be of 7-gauge 201 stainless steel with flat plate style reinforcements on top

- Two (2) 9/16 inch holes shall be located on both sides of the cab shield, 1 and 8 inches back from the front of the cab shield, forward hole shall be 1-3/8 inches down from top and they shall be parallel with box sides
- A grab handle made of 5/8 inch stainless steel rod, 20 inches long and three inches high, shall be welded to the cab shield and the bulk head, diagonally

Wiring studs ¼ inch x ¾ inch stainless steel threaded, shall be installed on the front bulkhead and cab shield:

a) Studs shall be placed along the left side of front bulkhead 3 inches in from the left edge of the cab shield beginning 7 inches up from the bottom edge of bulkhead and proceeding vertically on 16 inch centers to the horizontal member of the cab shield. Studs shall be placed on the underside of the cab shield starting 4 inches from the rear bend towards the front of the cab shield on 16 inch centers with one directly inline on front facing return

b) Studs shall be placed on the front of the cab shield horizontally, the first 6 inches in from the left edge on 16 inch centers, 1-½ inches down from the top bend

5. D. TAILGATE

- Tailgate shall be double acting
- Tailgate shall be fully boxed, double walled design
- All horizontal surfaces shall be dirt shedding
- Inner wall shall be ¼ inch AR400 to match the strength and durability of the floor and shall be primer coated
- Outer wall shall be 10-gauge 201 stainless steel
- All tailgate hardware visible on outside of body shall be 201 stainless steel
- Upper tailgate hinges shall be 1-½ inch thick 201 stainless steel with 5 inch offset
- Upper and lower pins shall be 1-¼ inch 201 stainless steel
- All tailgate hinges shall be greaseable
- A grab handle shall be located on the lower left corner of the tailgate
- A 201 stainless steel grab handle shall be located on the lower left corner of the tailgate
- Upper and lower dogleg slotted chain keepers shall be 201 stainless steel, with sufficient plated chain to lay tailgate flat
- Chain shall be removable, 3/8 inch, high tensile plated type
- 5/8 inch 201 stainless steel lift loop shall be welded on the outside
- All pivot points shall be grease zerk lubricated
- 201 stainless steel latches shall be retractable, grease zerk lubricated with zerks on the outside of the rear corner posts for accessibility
- Tailgate release shall be air operated
- Air cylinder shall be 3-½ inch diameter and meet military specifications for cold weather service
- Air cylinder housing shall be aluminum
- Air cylinder rod shall be stainless steel

5. E. SIDES

- Sides of dump body shall be 7-gauge 201 stainless steel, 85,000 PSI tensile strength, 35,000 PSI yield strength
- Finish shall be polished
- All welds shall be continuous
- Sides shall have a reverse-bend design
- Top rail shall be fully boxed and dirt shedding
- Rubrail shall have 45° slope to the flat side
- One integral break-formed strengthening brace per side
- Front pillars shall be full-depth, radiused, 201 stainless steel
- Rear pillars shall be full-depth, 201 stainless steel with 1 inch center hole and two (2) 11/64 inch holes (one on either side of center hole) for 45° marker light in corner 24 inches from bottom of pillar
- Pillars shall be dirt shedding
- Two (2) 11/16 inch holes shall be located on the sloped surface of left & right rubrails, 2-½ inches below the breakline, 11 and 13.5 inches back from the rear of the front corner post
- Two (2) threaded wiring studs ¼ inch x ¾ inch stainless steel shall be located 4 inches above sloped surface of left & right rubrails, 12 and 20-¾ inches forward of the rear corner post
- Three (3) 1-½ inch holes shall be located on the sloped surface of the left rubrail, 1-¾ inches below the breakline. They shall be 2, 4-½, and 7 inches forward of the rear cornerpost
- Two (2) 1-½ inch holes shall be located on the sloped surface of right rubrail, 1-¾ inches below the breakline. They shall be 2 and 4-½ inches forward of the rear cornerpost
- Two (2) 9/16 inch holes shall be located on the flat portion of left rubrail, 1 inch down from the breakline, 2 and 11-¼ inches rear of the front corner post
- Two (2) 9/16 inch holes shall be located on the flat portion of the left & right rubrails, 2-½ inches below the breakline, 31 and 37-¼ inches back from the front post

- A 2 inch tarp rail shall be installed 2 inches above the horizontal side and shall extend from the back side of the of the front corner post to the front side of the rear corner post on each side of the body
- The tarp rail shall include supports to the body sides located on 24 inch centers

Holes shall be provided in both rear pillars:

a) A 13/16 inch hole shall be located 6-¾ inches forward of the rear of the pillar and 30-½ inches from the bottom of the rubrail
b) A 5/8 inch hole shall be located 4-¾ inches from the rear of the pillar and 30-½ inches from the bottom of the rubrail with a ½ x 13 stainless steel nut welded on the inside of pillar
c) A 1-¼ inch hole shall be located 6-¾ inches forward of the rear of the pillar and 13 inches up from the bottom of the rubrail
d) A 5/8 inch hole shall be located 4-¾ inches from the rear of the pillar and 13 inches up from the bottom of the rubrail
e) A 1-1/4 inch hole shall be located 6-¾ inches forward of the rear of the pillar and 5 inches up from the bottom of the rubrail
f) A 5/8 inch hole shall be located 4-¾ inches forward of the rear of the pillar and 5 inches up from the bottom of the rubrail
g) A 5/8 inch hole shall be located 3-¾ inches in from of the rear of the pillar and ½ inch below the bottom of the rubrail.
h) The marker light cut out with mounting light bracket shall be installed in each rear pillar posts. The cutout shall include light mounting brackets installed at a 45°. The bracket shall fit a Betts maker light. The pilot hole shall be 2.25 inches. The mounting holes shall be .125 inches and shall be 3.625 inches apart.
i) Left pillar shall have two (2) 3/8 inch holes 10 inches forward of the rear of the pillar, up 7 inches and 10-¼ inches from the bottom of the pillar

5. F. HOIST

- Hoist shall be Crysteel Roller Combo Model # RC 750 or approved equal
- Hoist shall be NTEA Performance Class 50 NTEA Type VII
- Hoist shall have one, double acting, single stage cylinder
- Cylinder bore shall be 7 inches
- Cylinder shaft diameter shall be 2-¼ inches
- Cylinder stroke shall be 21-5/8 inches
- Cylinder shaft shall be chromed SW85 steel with 85,000psi yield strength
- Cylinders shall have maximum operating pressure of 2,200psi with internal bypass to protect cylinder from damage
- Cylinder base (raise) port size shall be SAE-10 (7/8-14)
- Rod port (lower) shall be SAE-8 (3/4-16)

Cylinder displacement:

a) up shall be 832.2 cubic inches
b) down shall be 746.5 cubic inches

- Load capacity shall be 15.3 tons @ 50 degree dump angle
- Hoist shall have 13-¾ inch mounting height
- Hoist shall have “Roller Combo” design with the initial lift point ahead of the center line of the body, directing the force of the hoist cylinder upwards for more breakaway power before transferring it to a scissors action
- Greaseless composite bearings shall be provided at all critical pivot points
- Hoist shall have full length sub-frame that is the same length as the dump body
- Sub-frame shall have 4-¾ inch high, “C” channel frame rails fabricated of ¼ inch A1011 steel with 50,000psi yield and 65,000psi tensile strength
- Remote grease kit - Hoist shall have a grease fitting bulkhead for the primary hoist pivot, located on the right (passenger) side and have four (4) grease zerks
- Rear hinge shall be fabricated with structural steel that is 5 inch x 3 inch x 3/8 inch x 36-½ inch
- Hinge pins shall be 1-¾ inch x 5-13/16 inch round stainless steel with greaseless composite bearings
- Two (2) body props shall be provided to support empty body weight
- Hoist must be listed in the NTEA dump body hoist chart

5. G. BODY PREPARATION

- Entire body shall be cleaned and rinsed
- Underside of body to be sandblasted and primed with 4-part Epoxy primer, then top coated with a Black Poly-Urethane paint
- Inside floor, floor radius, and inner tailgate panel to be primed with 4-part Epoxy primer, then top coated with a Black Poly-Urethane paint

ITEM 6 - SPECIFICATION # 04-14SSDMP.C14

DUMP BODY, STAINLESS STEEL, 10 cu. yd., 14FT., W/ UNDER BODY HOIST and ½ CAB PROTECTOR – (Make/Model) Crysteel/Select Stainless Steel or equal

GENERAL SUMMARY

The following specification is for stainless steel dump bodies, of approximately 10 cu. yd. with an underbody hoist. Each shall consist of a minimum 168 inch length by 87 inch inside box width. Each box shall include an underbody hoist with double acting cylinder, ½ cab protector (attached per MDOT specifications); air operated tail gate latches and designed to accommodate most vertical exhaust stacks without modification. The bodies will have holes pierced and studs mounted per MDOT specifications. MDOT will install this dump box on a 64,000 GVW tandem axle, cab and chassis with chassis measurements of approximately 218 inch W.B., 136 inch C.A. and 192 inch C.E.

- Body shall measure 168 inches long, 42 inch high front, 34 inch high sides and 42 inch tailgate
- Body shall have inside width of 87 inches
- Body shall have outside width of 96 inches
- Capacity shall be approximately 10 cubic yards
- "Body raised" light shall be activated by an epoxy sealed, magnetic proximity switch, Grainger part # 6C834 or Omron type TL-W20ME2 12V - 24V **No Exceptions**

6. A. FLOOR

- Floor shall be constructed of ¼ inch AR400 plate steel, 180,000 PSI tensile strength and yield of 145,000 PSI
- Floor shall have 9 inch radius wings of ¼ inch A1011 carbon steel at **sides only**

6. B. UNDERSTUCTURE

- Understructure shall be crossmemberless
- All welding shall be continuous
- Fabricated longsills shall be of ¼ inch CQ carbon steel inner panels and ¼ inch CQ carbon steel outer panels
- Interior of longsills shall be coated with rust inhibitor coating at factory
- Rear rubrail shall be full width, fabricated design, 7-gauge 201 stainless steel, **Channel style rear aprons are not acceptable**
- Wiring tie down loop of ¼ inch steel rod shall be installed on the underside of the floor, 3 inches in from the inside of the longsills and 3-¼ inches forward of the rear rubrail and extend the entire length of the underside of the floor

Support plates shall be installed from the rubrails to the floor:

a) open at the front and rear
b) made of A1011 carbon steel
c) notched opening 68-80 inches behind the front corner posts of the body to allow access for tarp arm mounting bracket fasteners

- Longsills shall have 3 inch passageway in the rear of the longitudinals for wiring

6. C. FRONT BULKHEAD & ½ CAB SHIELD

- Front bulkhead shall be constructed of 7-gauge 201 stainless steel with pressed in brace for rigidity
- Front of body shall have a 1-¼ inch wiring hole placed in the lower left corner, center to be 1.875 inches from side and 2 inches up from lower edge
- ½ cab shield shall be 100% welded to the front bulkhead at the factory per MDOT measurements
- ½ cab shield shall be of 7-gauge 201 stainless steel with flat plate style reinforcements on top
- Two (2) 9/16 inch holes shall be located on both sides of the cab shield, 1 and 8 inches back from the front of the cab shield, forward hole shall be 1-3/8 inches down from top and they shall be parallel with box sides
- A grab handle made of 5/8 inch stainless steel rod, 20 inches long and three inches high, shall be welded to the cab shield and the bulk head, diagonally

Wiring studs ¼ inch x ¾ inch stainless steel threaded, shall be installed on the front bulkhead and cab shield:

a) Studs shall be placed along the left side of front bulkhead 3 inches in from the left edge of the cab shield beginning 7 inches up from the bottom edge of bulkhead and proceeding vertically on 16 inch centers to the horizontal member of the cab shield. Studs shall be placed on the underside of the cab shield starting 4 inches from the rear bend towards the front of the cab shield on 16 inch centers with one directly inline on front facing return
b) Studs shall be placed on the front of the cab shield horizontally, the first 6 inches in from the left edge on 16 inch centers, 1-½ inches down from the top bend

6. D. TAILGATE

- Tailgate shall be double acting
- Tailgate shall be fully boxed, double walled design
- All horizontal surfaces shall be dirt shedding
- Inner wall shall be ¼ inch AR400 to match the strength and durability of the floor and shall be primer coated
- Outer wall shall be 10-gauge 201 stainless steel
- All tailgate hardware visible on outside of body shall be stainless steel.

- Upper tailgate hinges shall be 1-½ inch thick 201 stainless steel with 5 inch offset
- Upper and lower pins shall be 1-¼ inch stainless steel
- All tailgate hinges shall be greaseable
- A grab handle shall be located on the lower left corner of the tailgate
- Upper and lower dogleg slotted chain keepers shall be stainless steel, with sufficient plated chain to lay tailgate flat
- Chain shall be removable, 3/8 inch, high tensile plated type
- 5/8 inch stainless steel lift loop shall be welded on the outside
- All pivot points shall be grease zerk lubricated
- Stainless steel latches shall be retractable, grease zerk lubricated with zerks on the outside of the rear corner posts for accessibility
- Tailgate release shall be air operated
- Air cylinder shall be 3-½ inch diameter, meet military specifications for cold weather service
- Air cylinder housing shall be aluminum
- Air cylinder rod shall be stainless steel

6. E. SIDES

- Sides of dump body shall be 7-gauge 201 stainless steel, 85,000 PSI tensile strength, 35,000 PSI yield strength
- Finish shall be polished
- All welds shall be continuous
- Sides shall have a reverse-bend design
- Top rail shall be fully boxed and dirt shedding
- Rubrail shall have 45° slope to the flat side
- One integral break-formed strengthening brace per side
- Front pillars shall be full-depth, radiused, 201 stainless steel
- Rear pillars shall be full-depth, 201 stainless steel with 1 inch center hole and two (2) 11/64 inch holes (one on either side of center hole) for 45° marker light in corner 24 inches from bottom of pillar
- Pillars shall be dirt shedding
- Two (2) 11/16 inch holes shall be located on the sloped surface of left & right rubrails, 2-½ inches below the breakline, 11 and 13.5 inches back from the rear of the front corner post
- Two (2) threaded wiring studs ¼ inch x ¾ inch stainless steel shall be located 4 inches above sloped surface of left & right rubrails, 12 and 20-¾ inches forward of the rear corner post
- Three (3) 1-½ inch holes shall be located on the sloped surface of left rubrail, 1-¾ inches below the breakline. They shall be 2, 4-½, and 7 inches forward of the rear corner post
- Two (2) 1-½ inch holes shall be located on the sloped surface of right rubrail, 1-¾ inches below the breakline. They shall be 2 and 4-½ inches forward of the rear corner post
- Two (2) 9/16 inch holes shall be located on the flat portion of left rubrail, 1 inch down from the breakline, one (1) 3-1/4 inches forward of the rear of the front corner post and one (1) 6 inches rear of the rear of the front corner post
- Two (2) 9/16 inch holes shall be located on the flat portion of left & right rubrails, 2-½ inches below the breakline, 54-½ and 60-¾ inches back from the front post
- A 2 inch tarp rail shall be installed 2 inches above the horizontal side and shall extend from the back side of the of the front corner post to the front side of the rear corner post on each side of the body
- The tarp rail shall include supports to the body sides located on 24 inch centers
- Both the tarp rail and the gussets shall be constructed of type 201 stainless steel

<u>Holes shall be provided in both rear pillars:</u>

a) A 13/16 inch hole shall be located 6-¾ inches forward of the rear pillar and 38-½ inches from the bottom of the rubrail
b) A 5/8 inch hole shall be located 4-¾ inches from the rear of the pillar and 38-½ inches from the bottom of the rubrail with a ½ x 13 stainless steel nut welded on the inside of pillar
c) A 1-¼ inch hole shall be located 6-¾ inches forward of the rear of the pillar and 13 inches up from the bottom of the rubrail
d) A 5/8 inch hole shall be located 4-¾ inches from the rear of the pillar and 13 inches up from the bottom of the rubrail
e) A 1-1/4 inch hole shall be located 6-¾ inches forward of the rear of the pillar and 5 inches from the bottom of the rubrail
f) A 5/8 inch hole shall be located 4-¾ inches forward of the rear of the pillar and 5 inches from the bottom of the rubrail
g) A 5/8 inch hole shall be located 3-¾ inches in from of the rear of the pillar and ½ inch below the bottom of the rubrail.
h) The marker light cut out with mounting light bracket shall be installed in each rear pillar posts. The cutout shall include light mounting brackets installed at a 45°. The bracket shall fit a Betts maker light. The pilot hole shall be 2.25 inches. The mounting holes shall be .125 inches and shall be 3.625 inches apart.
i) Left pillar shall have two (2) 3/8 inch holes 10 inches forward of the rear of the pillar, up 7 inches and 10-¼ inches from the bottom of the pillar

6. F. HOIST

- Hoist shall be Crysteel Roller Combo Model # RC 690 or approved equal
- Hoist shall be NTEA Performance Class 90 NTEA Type VII
- Hoist shall have two, double acting, singlestage cylinders
- Cylinder bore shall be 6 inches
- Cylinder shaft diameter shall be 2-3/8 inches
- Cylinder stroke shall be 32-½ inches
- Cylinder shaft shall be chromed SW85 steel with 85,000psi yield strength
- Cylinders shall have maximum operating pressure of 2,200psi with internal bypass to protect cylinder from damage
- Cylinder base (raise) port size shall be SAE-12 (1-16)
- Rod port (lower) shall be SAE-10 (7/8-14)

Cylinder displacement:

a. up shall be 1837.8 cubic inches
b. down shall be 1579.4 cubic inches

- Load capacity shall be 28.4 tons @ 50° dump angle
- Hoist shall have 17-½ inch mounting height
- Hoist shall have "Roller Combo" design with the initial lift point ahead of the center line of the body, directing the force of the hoist cylinder upwards for more breakaway power before transferring it to a scissors action
- Greaseless composite bearings shall be provided at all critical pivot points except primary hoist pivot
- Hoist shall have full length sub-frame that is the same length as the dump body
- Sub-frame shall have 5-1/8 inch high, "C" channel frame rails fabricated of ¼ inch A1011 steel with 50,000psi yield and 65,000psi tensile strength
- Remote grease kit - Hoist shall have a grease fitting bulkhead for the primary hoist pivot, located on the right (passenger) side and have six (6) grease zerks
- Rear hinge shall be fabricated with structural steel angle that is 8 inch x 4 inch x ½ inch x 38 inch
- Hinge pins shall be 2-3/8 inch x 6 inch round stainless steel with greaseless composite bearings
- Two (2) body props shall be provided to support empty body weight
- Hoist must be listed in the NTEA dump body hoist chart

6. G. BODY PREPARATION

- Entire body shall be cleaned and rinsed
- Underside of body to be sandblasted and primed with 4-part Epoxy primer, then top coated with a Black Poly-Urethane paint
- Inside floor, floor radius, and inner tailgate panel to be primed with 4-part Epoxy primer, then top coated with a Black Poly-Urethane paint

ITEM 7.1 & 7.2 - SPECIFICATION # CMBBDY.C14

COMBINATION 45° SLOPED SIDE DUMP AND SPREADERBODY, HOIST, REAR DISCHARGE AND DISTRIBUTION SYSTEMS – (Make/Model) Monroe/DVS-132-96-56 & DVS-168-96-56 or equal

GENERAL SUMMARY

The following specification is for:

- **Item 7.1 –** 11 foot combination 45° slope side dump and spreader bodies which shall consist of self-unloading dump bodies constructed of a type 201 stainless steel body, dump hoist, discharge/feed conveyor. Conveyor floor shall be ¼ inch type 201 stainless steel, dual power drive rear for dump body conveyor, and all components necessary to make complete operating units.
- **Item 7.2 –**14 foot combination 45° slope side dump and spreader bodies which shall consist of self-unloading dump bodies constructed of a type 201 stainless steel body, dump hoist, discharge/feed conveyor. Conveyor floor shall be ¼ inch type 201 stainless steel, dual power drive rear for dump body conveyor, and all components necessary to make a complete operating unit.
- **Item 7.3 –** Reversing rear cross auger with self-leveling side spinner.
- **Item 7.4 –** Reversing rear cross auger with center spinner.
- **Item 7.5 –** Rear tip up spinner with winch.
- **Item 7.6** – Zero velocity spreader.
- **Item 7.7** – Salt slurry generator.
- **Item 7.8 –** Belt over main conveyor chain. These combination dump and spreader bodies shall be capable of hauling and dumping or rapidly discharging crushed rock, gravel, hot mix asphalt, sand, chips, and abrasive or chemical for ice control. MDOT will install these dump and spreader bodies on a **64,000 GVWR** tandem axle, cab and chassis with chassis measurements of approximately 218 inch W.B., 136 inch C.A., and 192 inch C.E. for the 14 foot bodies and **44,000 GVW** single axle, cab, and chassis with chassis measurements of approximately 187 inch W.B., 112 inch C.A., and 187 inch C.E for the 11 foot bodies.

7. A. BODY

- 11 foot bodies shall have an approximate struck capacity of 7-¾ cu/yd minimum for rear discharge without removable side boards
- 14 foot bodies shall have an approximate struck capacity of 10 cu/yd. minimum for rear discharge without removable side boards
- Bodies shall be of type 201 stainless steel construction
- Overall height above truck frame shall not exceed 55 inches without cab shield
- Top inside width of body shall be approximately 89 inches and outside width shall not exceed 96 inches
- Top of floor to the top of the side wall shall be approximately 44 inches
- Body shall be rigidly constructed with a boxed top rail construction of 7 gauge type 201 stainless steel, 5 inch height x 4 inch depth
- Sides shall include vertical channel type ribs, approximately 4 inches wide x 2 inches deep constructed of 7 gauge type 201 stainless steel, spaced on 36 inch centers minimum
- Side sheeting for the "V" body shall be 7 gauge type 201 stainless steel
- Body longitudinals shall be constructed of ¼ inch type 201 stainless steel with minimum 12 inch height and include two (2) 3 inch ID cross over tubes for installation of hydraulic hoses and wiring
- Rear of body longsills must be slotted to facilitate removal of drive system
- Drive system including gearboxes, drive shaft, sprockets, and bearings must be removable as an assembly
- Rear hinge shall be fabricated with structural steel angle that is 8 inch x 4 inch x ½ inch x 38 inch, Hinge pins shall be 2-3/8 inch x 6 inch round stainless steel with greaseless composite bearings
- Two (2) body props shall be provided to support empty body weight
- Body floor shall be bolted in with 1 inch welds at all four corners and supported by 7 gauge 3 inch x 3 inch cross angles located on 12 inch centers
- Body longitudinals shall be supported under chain by 4 inch formed cross members on 24 inch centers
- All channel supports under the floor shall be constructed of ¼ inch type 201 stainless steel
- Return angle on the longitudinals shall be 4-½ inch boxed type for additional support and any retention of material
- All joints on body shall be continuous welded
- Overall width of the body at fenders shall be approximately 96 inches to provide full top cover of rear tires

<u>Four (4) covered access openings shall be provided below the body interior on the rear facing panel:</u>

a. For accessing the rear gear boxes for maintenance
b. For installation of rear attachments/accessories

- Two (2) covered access openings shall be provided on the forward facing panel of the rear corner post
- Rear of body shall be flat to allow installation of MDOT approved accessories
- Rear corner posts shall be boxed in and drilled and tapped to accept MDOT rear lighting arrangement
- Both rear side posts shall have one (1) 1-1/2 inch hole, two (2) 1-¼ inch holes, one (1) 13/16 inch hole and four (4) 9/16 inch holes with ½ inch stainless steel nuts welded to the backside
- Additional wire/cable retention studs shall be installed
- All hole and stud quantities and locations shall be subject to change and will be determined by MDOT at pre-construction meeting
- A heavy-ribbed, reinforced, offset, hinged, rear end-gate with double latch and air operated release shall be easily removed
- Front of body shall be sloped to accommodate a trunnion-mounted cylinder with partial doghouse and conform to the 45° slope of the body, 100% welded on the inside and outside
- Cylinders mounted forward of the front of the body will **NOT** be acceptable
- All bolts used shall be stainless steel.
- Body sides shall be 45° sloped
- All areas of body shall be constructed to withstand heavy duty use as a dump and as a spreader
- Body shall include all items needed to be fully operational
- All items which are normally furnished as standard equipment shall be supplied and shall conform in strength, quality of material, and workmanship to best commercial practice

7. B. CONVEYOR

- Conveyor shall be pintle chain type running longitudinally with the body feeding material to the hinged rear end-gate opening
- Conveyor shall not extend past the vertical tailgate
- Overall conveyor width shall be 34 inches minimum
- Bolt in conveyor floor with 1 inch welds at all four corners shall be ¼ inch type 201 stainless steel
- Conveyor chain shall be heat-treated 2-¼ inch pitch pintle type with .224 inch link thickness, 15/32 inch pin diameter and have a 26,000 pound minimum average tensile strength, manufactured in the USA

- Cross bars ½ inch x 1-½ inch shall be positioned on approximately 2-¼ inch centers and welded on both the top and bottom of the bar
- Two (2) high torque, variable speed 6:1 gearboxes and hydraulic motors (White Roller Stator) with ground speed sensor having 100 pulses/revolution capability on one of the gearboxes shall be provided
- Rear discharge bodies shall have drive located at the rear of the conveyor
- Eight toothed, case hardened to 40-48 Rc, self-cleaning drive sprockets shall be keyed to the 2 inch drive and idler shafts
- Conveyor drive shaft shall have heavy duty, dust sealed self-aligning four bolt flange bearings
- Heavy duty idler assembly with side rail style adjusters and 1-¼ inch adjusting bolt shall provide 9 inches of adjustment for proper conveyor chain tension
- ¼ inch type 201 stainless steel conveyor bottom shall be replaceable and have rear "roller" lip with wiper belt

7. C. TAILGATE

- Tailgate shall be minimum of 6 inches higher than sides of body
- Tailgate shall be manufactured of minimum 3/16 inch, type 201 stainless steel with, 5 panel, boxed perimeter of 3 inch formed channel
- Tailgate shall have a 3 inch x 3 inch D-ring welded to the top center of tailgate
- Tailgate shall be double acting with squared perimeter and two (2) horizontal braces of 3/16 inch material the full width of the tailgate
- Tailgate shall have a 5/8 inch stainless rod by a minimum 7 inch grip handle located in the lower left hand corner
- Material door shall extend 16 inches into the interior of the body to prevent material from escaping through the partially opened door over the conveyor
- An adjustable discharge gate or door with an opening of at least 21 inches x 8-½ inches of a minimum of ¼ inch thick with a heavy duty screw-type operated adjustment mechanism on passenger's side and at bottom edge of tailgate
- Feedgate must have infinite positions and include ruler to indicate gate opening height
- Tailgate shall have 1 inch x 4 inch bar stock tailgate hardware with 1-¼ inch hardened pins
- Tailgate latches shall be 1 inch flame cut with each latch being adjustable, over center type
- Tailgate latches shall be air operated by a 3-½ inch air cylinder kit
- Air cylinder must provide power latch and power release, spring assist latching systems are not acceptable
- Cylinder kits shall fit the existing brackets without modification and may be shipped loose, with the body

7. D. POWER DRIVE AND CONTROLS

- Hydraulic drive shall include two (2) geroler-type, high-torque, low speed hydraulic motors integrally mounted to the conveyor gear cases, **these motors shall be White Roller Stator only, no exceptions**
- One of these hydraulic motors shall be equipped with an application rate sensor with 100 pulses per revolution
- Sensor shall be a Hall Effect speed type
- Heavy duty, high torque hydraulic motor shall be integrally mounted to the spinner hub assembly and shall power the spinner
- Hydraulic tubing shall be used where practical, rated along with hydraulic hose to withstand 1-½ times system operating pressure requirements
- Hydraulic tubing shall be ¾ inch minimum I.D.
- All tubing shall be secured to body with polymer retaining blocks

7. E. HOIST

<u>11 foot, 45°, combination dump/spreader body hoist shall include:</u>
a. Double acting hoist cylinder
b. Hard chrome plated hoist cylinder surfaces
c. Inverted, trunnion mounted cylinder
d. 5 inch, 4 inch, 3 inch active sections
e. NTEA Class 90, rated at 27.5 tons lift capacity @ 2,500psi and 22.0 tons @ lift capacity @ 2,000psi
f. Cylinder total stroke of 99 inches

<u>14 foot, 45°, combination dump/spreader body hoist shall include:</u>
a. Double acting hoist cylinder
b. Hard chrome plated hoist cylinder surfaces
c. Inverted, trunnion mounted cylinder
d. 6 inch, 5 inch, 4 inch active sections
e. NTEA Class 120, rated at 46.4 tons lift capacity @ 2,500psi and 37.1 tons @ lift capacity @ 2,000psi
f. Cylinder total stroke of 138 inches

7. F. CAB PROTECTOR

- Half cab protector shall be 7 gauge type 201 steel, installed by vendor on the front of the body
- All welding shall be continuous
- End plates shall be streamlined to prevent sharp corners or edges
- A stainless steel grab handle shall be located on the cab protector

- Cab protector shall extend forward of the body a minimum of 24 inches
- Stainless steel studs for wire and cable retention shall be on the cab protector as well as the body
- MDOT will notify successful vendor of the proper mounting height of cab protector and stud location prior to construction

7. G. FENDERS

- Body shall be equipped with 7 gauge type 201 stainless steel fenders
- Fenders shall be sufficiently constructed and supported so as to allow for mounting of 100 gallon liquid tanks on each side of the body
- Overall length of fenders shall be 81 inches on 11 foot bodies and 108 inches on 14 foot bodies
- Fenders must have factory cut holes for installation of tarp springs

7. H. HEAD SHEET

- Head sheet shall be constructed of 7 gauge type 201 stainless steel and be sloped 45° back
- Front slope shall be contoured to match the slope of the side sheeting and be continuous welded were the side meets the front on both the inside and the outside
- Front sheet to include an enclosure for a front mounted telescopic hoist
- A hoist mounting that is in front of the body will not be acceptable
- Front shall be at least 6 inches higher than the sides
- All horizontal surfaces shall be dirt shedding
- A grease extension kit shall be provided and installed at the front and the rear of the body
- Rear grease kits shall provide lubrication to both the rear bearings and all pivot points for the tailgate linkage
- Front grease kits shall provide lubrication to both the upper and lower trunnions on the hoist, front conveyor bearings, and the pivot points for the over center cam that operates the tailgate linkage
- Grease hoses shall be SAE107 Hytron hose rated at 3000 psi maximum work pressure
- Swing up type side ladder constructed of type 201 stainless steel shall be provided by manufacturer and shipped loose for custom fitting by MDOT
- All lighting shall be provided by MDOT
- Rear body hinge top plate shall not extend rearward more than 4 inches from the centerline of the pivot pin
- Hinge shall include composite bushings and a 2.25 inch stainless steel or nitrated pivot pin
- Mounting angle for the hinge shall be 4 inch x 8 inch x 3/8 inch
- A 1.25 inch x ¼ inch, 201 stainless steel flat stock tarp tie rail, welded to side braces, full length of body
- Tarp tie rail shall be installed just above the 45° break on the side braces

ITEM 7.3 - Option 1 - Reversing rear cross auger with side spinner – (Make/Model) Monroe/MS969 or equal

7.3. REVERSING REAR CROSS AUGER WITH SIDE SPINNER

- Cross auger shall be of modular design, constructed of 7 gauge type 201 stainless steel
- Auger trough shall be constructed of 7 gauge type 201 stainless steel with ¼ inch type 201 stainless steel end plates
- Endplates below the top lid must be tapered to provide adequate clearance for hose routings and wing mounts, design to be approved at MDOT pre-construction meeting
- The auger trough shall be made to fit to the discharge trough on the combination body
- Auger housing shall include a three (3) piece hinged lid
- All three (3) section covers shall open and close independently of each other and center section shall be the width of the combination body main conveyor
- All three (3) sections can be latched in an open or closed position
- The auger trough shall have discharge openings on each end of the trough and shall be supplied with a cover that can be used in either opening
- Auger trough shall include a full opening bottom for material cleanout
- Auger motor shall be directly coupled to the auger shaft with a stainless steel coupler
- Drive motor shall be a 28 CID with 7/8 inch O-ring ports
- MDOT can order the cross auger with either left hand or right hand mounted motor as deemed necessary
- Shafts shall be 1-½ inch and supported by a heavy duty 1-½ inch sealed, self-aligning, re-lubable four (4) bolt flange bearing
- Exposed end of the shaft on the opposite end of the motor shall include a stainless steel cover
- Auger shall be 9 inch diameter with continuous one way flighting with a 4 inch pitch
- Flighting shall be a minimum of 5/16 inch thick on the outer edge and welded to a 2-7/8 inch OD schedule 40 pipe
- All bearings shall be equipped with grease fittings
- A spinner shall be supplied for all the units that are not equipped with a zero velocity spinner assembly
- Spinner assembly shall include a direct coupled 3.0CID drive motor, an 18 inch poly spinner disc, and a mounting bracket that attaches to the left or right side of the auger trough
- All supports and brackets shall be type 2014stainless steel
- Spinner disc shall include a shroud to prevent the discharge of materials towards the chassis
- Spinner assembly shall be mounted independently of the bottom cleanout door and have an easy one-man mount and

dismount

- Standard spinner disk shall be 18 inches in diameter and manufactured from red polyurethane material
- Spinner disk shall be direct mounted to the hydraulic motor by means of a cast iron hub
- Spinner motor must have seal saver greaseable cavity with grease zerk between the motor and hub
- Six (6) formed flights on the spinner disk shall be cupped for even spreading
- Spinner motor shall be low speed/high torque type
- Quick disconnect mounting hardware shall be provided
- All 201 stainless steel parts shall be in bare condition

ITEM 7.4 - Option 2 - Reversing rear cross auger with center spinner – (Make/Model) Monroe/MS912 or equal

7.4. REVERSING REAR CROSS AUGER WITH CENTER SPINNER

- The auger trough shall be made to fit to the discharge trough on the combination body
- Cross auger shall be of modular design, self-leveling, and mounted to the rear of the combination body
- Cross auger shall be constructed of 201 stainless steel
- Auger trough shall be 12 inches wide minimum
- Trough side and end panels shall be ¼ inch and bottom panel shall be 7 gauge type 201 stainless steel
- Side delivery unit shall be equipped with an air operated diverter chute to direct the flow of material to either the cross auger or the center spinner
- Center opening to the auger shall be fitted with a guard 12 gauge sheet and ¼ inch round rod stainless steel
- Trough shall include removable covers of 10 gauge type 201 stainless steel on each end
- Trough shall include removable chutes on each discharge end of 10 gauge type 201 stainless steel with hinged door with handle
- 24 inch poly spinner assembly shall be center mounted below trough
- Spinner chute and diverter door shall be 7 gauge type 201 stainless steel
- Diverter door shall be activated by a 2 inch diameter by 2 inch stroke air cylinder
- Spinner assembly shall have three (3) adjustable hinged deflectors of 7 gauge type 201 stainless steel surrounding the spinner disc to regulate spread pattern
- Deflectors shall be adjustable without use of tools
- Spinner assembly with hub shall have a 3 ci top mounted hydraulic motor
- Side delivery unit shall be equipped with swivel type mounting brackets and 2 inch tubular inserts for mounting to the combination body
- Auger shall be 9 inch diameter with continuous one way flighting
- Flighting shall be 5/16 thick minimum on outer edge, welded to a 2-7/8 inch OD schedule 40 pipe
- Auger motor shall be directly coupled to the auger shaft with a stainless steel coupler
- Auger shall be driven by a 28 ci direct drive hydraulic motor mounted on right hand side
- Drive motor shall have 7/8 inch O-ring ports
- Idler end of auger shall have 1-1/2 inch shaft and be supported by a heavy duty 1-1/2 inch sealed, self-aligning, re-lubable four (4) bolt flange bearing
- All bearings shall be equipped with grease zerks
- Exposed end of shaft opposite drive motor shall have a stainless steel cover

ITEM 7.5 - Option 3 - Rear tip up spinner with winch – (Make/Model) Monroe/ or equal

7.5. REAR TIP UP SPINNER ASSEMBLY

- Spinner frame shall be of 10 gauge type 201 stainless steel
- Spinner chute shall be designed to be compatible with the body tailgate and conveyor
- Chute shall be a minimum of 27 inches wide and 10 inches deep
- Spinner shall be designed to be installed on the rear tailgate using 3/8 inch, 201 stainless steel plates
- Mounting plates shall have an integral hinge design and allow spinner removal by removing four (4) bolts
- Hinge rods shall be ¾ inch diameter 201 stainless steel
- Top of chute shall be reinforced with type 201 stainless steel ¼ inch x 2-½ inch x 2-½ inch angles and ¼ inch x 1-½ inch plate for the hinge rods
- Chute shall be designed with two (2) internal adjustable deflectors and a hinged cover for the top of the chute made of 10 gauge 201 stainless steel
- All hardware shall be stainless steel
- Distributor disc shall be 24 inches in diameter, constructed of ½ inch polyurethane with six (6) 1-3/4 inch high x 9 inch long polyurethane fins for clockwise rotation

- Top mounted 3.2 CI spinner hydraulic motor with .875 ORB ports shall be high torque, low speed with the spinner disc cast hub mounted directly to the motor shaft
- Four (4) 7 gauge 201 stainless steel baffles shall be provided to control spread width and direction
- Baffles shall be of type 201 stainless steel, easily adjusted without the use of tools
- There shall be one section ahead, one section to the rear, and one section minimum on each side of spinner
- A hand winch rated at a minimum 800 pound capacity with integral brake shall be provided to raise and lower spinner assembly
- Spinner assembly shall tip-up removing the front hinge rod, engaging the winch, and using the same hinge rod to lock the spinner in the stored position
- Mounting bracket, cable, pulley, and mounting hardware shall be included

ITEM 7.6 - Option 4 - Zero velocity spreader – (Make/Model) Monroe/ or equal

7.6. ZERO VELOCITY SPREADER

- Spreader housing shall be 10 gauge 201 stainless steel
- Housing shall have a 12 inch x 14 inch opening with three flexible bolt on flares to divert material into housing
- Housing opening shall have two (2) safety bars of 3/16 inch 201 stainless steel to prevent large objects from entering housing opening
- Spreader impeller shall dispense material onto roadway, and be manufactured from type 201 stainless steel and shall include replaceable end bits
- Impeller shall have four (4) 4-¾ inch x 4 inch paddles, 16 inches in diameter with a 1 inch bore steel hub integrally welded to impeller
- Impeller motor shall be low speed/high torque “orbital type” hydraulic wheel motor with 3 cu/in displacement
- Motor shall be capable of applications up to 800rpm
- Motor shall be Parker type with a stainless steel output shaft
- Impeller drive shaft shall extend through both sides of the housing and is supported by a greaseable bearing on the housing side opposite the drive motor
- An in line flow meter with a hall affect speed sensor shall be provided with speed sensor and Brad Harrison type connector to interface with control console
- A sensor cable with LED indicator lights shall be provided to interface the Hall Effect flow meter sensor to a Dickey-john Control Point controller
- Spinner assembly shall be mounted with approximately 6 inches ground clearance and be adjustable in height. Mount shall have prior approval of MDOT
- Spinner assembly shall lift 6 inches by actuating in cab switch
- Spinner assembly shall rotate 45° right and left of center position by actuating remote in cab switch
- Direction of spinner assembly shall be displayed on console by indicator lights
- Spinner assembly shall include up/down actuating cylinder, right/left actuating cylinder with a built in position sensor, and a deflector actuating cylinder
- A closed center, electric actuated valve shall be provided with the zero velocity spinner to control the up/down, right/left, and deflector functions
- Cab controls for the zero velocity spinner shall include switches for up/down, right /left, deflector up/down, a position display, and all necessary wiring harnesses to interface the controls to the valve

ITEM 7.7 - Option 5 -. SALT SLURRY GENERATOR – (Make/Model) Monroe/SSG-DVS or equal

7.7. SALT SLURRY GENERATOR

- Unit shall consist of upper chute assembly with guard, roller mill main frame assembly, spinner assembly with shield and spray nozzles
- Upper chute shall be 10 gauge type 201 stainless steel with 3/8 inch reinforced hinge plates
- Upper chute shall have hinges, pins, winch and slide rail assembly to allow chute to be raised to allow dumping of load
- Upper chute assembly shall be designed for tailgate mounting on combination body
- Upper chute shall include a fiberglass Nema rated enclosure to house the air pressure regulator and air valve assembly
- Pressure regulator shall be manually adjustable from 0-140 psi
- Air valve shall be electronically activated via a switch in cab of truck (switch supplied by MDOT)
- Upper chute shall be continuously welded 100% throughout
- Upper chute shall bolt directly to the roller mill main frame using stainless steel hardware
- Roller mill main frame shall be ,250 inch and .375 inch type 201 stainless steel
- Roller mill shall incorporate a slide mechanism for roller engagement
- Roller slide engagement shall be activated by 4 inch x 4 inch double acting cylinder with a maximum 200psi rating
- Cylinder shall have a stainless steel rod and aluminum body
- Idler side of rollers shall be 1-3/4 inch shaft mounted to a 1-3/4 inch relubable bearing assembly
- Drive side of rollers shall be direct coupled to the Parker motors

- Rigid set roller shall be driven by a 6 ci 4 bolt Parker motor with a 1 inch drive shaft and coupler
- Engagement roller shall be driven by a 10 ci 4 bolt Parker motor with a 1 inch drive shaft
- Drive motors shall be plumbed in series
- Roller shall be 9 inch diameter and 10 inches in overall length of chrome silicone alloy steel and hardened by heat treating to 53-60 Rockwell C specifications
- Rollers shall have a minimum of four (4) teeth per inch set at .08516 depth
- Rolls shall be balanced to reduce vibration and prevent premature wear
- Complete spinner frame shall bolt directly to the roller mill with stainless steel hardware
- Spinner disc shall be 18 inches in diameter of molded poly
- Spinner shall have a 1 inch diameter hub bolted directly to the spinner motor
- Spinner assembly shall have a locking rotational adjustment to change dispersion pattern of granular output from spinner

- Mounted on spinner guard shall be three (3) fan nozzles of 3 gpm capacity to fully encapsulate the granular product with the liquid injection of up to 60-90 gallons per ton
- Entire assembly shall be easily raised a minimum of 18 inches to allow for dumping of loaded material without creating interference
- Slide assembly shall be manufactured from type 201 stainless steel structural tube
- Winch, cable and pulleys shall be rated for 1,200 pounds

ITEM 7.8 - Option 5 Belt over main conveyor chain – (Make/Model) Monroe/ACCU-PLACE or equal

7.7. OPTIONAL BELT OVER CHAIN

- Main conveyor shall have the option of a belt over the conveyor chain
- Chain shall be 667XH type with ½ inch x 1-½ inch cross bars on 4-½ inch centers
- A 3/8 inch hi-temp rubber belt rated for 212° shall be bolted over the top of the chain, to every cross bar with a minimum of 6 stainless steel bolts and washers on every cross bar
- Chain shield shall be equipped with rubber hi-temp side seals

ITXEM 8 - SPECIFICATION # 55-FMBBLD.C14

UNDER-BODY SCRAPER, FOLDING MOLD BOARD STYLE SNOW BLADE, HYDRAULIC ANGLING – (Make/Model) Monroe/FMB-3512 or equal

GENERAL SUMMARY

The following specification is for 12 foot under-body scrapers/snow blades, with a two-piece "Folding Mold Board". The scrapers furnished shall be of rugged construction so that alignment may be maintained. It shall consist essentially of a rigidly braced suspension assembly with swing circle, low frame assembly with heavy-duty folding mold board, and hydraulic power for raising and lowering, and for power reversing. It shall consist of heat treated high carbon mold boards approximately ½ inch x 10 inches wide for the upper plate or "folding flap", a two piece lower mold board, with a 5/8 inch x 6 inch upper "backer plate" that contains the hinge line for the folding flap and pivot assembly for raising and lowering. A ¾ inch x 9 inch lower, overlapping mold board with offset for USS blades shall be bolted to the lower backer plate. The whole unit shall be 12 feet in length. The hole spacing for the blades shall be for 4 foot sections. The unit will be complete with hanger board, dual swing cylinder circle, hydraulic lift and swing cylinders, and mounting plates with hardware. Unit must be capable of mounting carbide cutting edges. All parts whether or not specifically mentioned, but necessary to provide a complete operating unit or which are normally furnished as standard equipment shall be supplied and shall conform in strength, quality of material, and workmanship to best commercial practice. Standard equipment shall be furnished except where optional or conflicting equipment is specified. Nitrided rods shall be used on all blade lift cylinders. Socatri 1000 rods shall be used on all swing cylinders.

MDOT will install this scraper blade on a 44,000GVWR single axle 4 x 2, dump truck with chassis measurements of approximately 186 inch W.B., 108 inch C.A. and 171 inch C.E. or a 64,000GVWR tandem axle 6 x 4, dump truck with chassis measurements of approx. 211 inch W.B., 136 inch C.T. and 213 inch C.E.

8. A. FOLDING MOLD BOARD

- Folding mold board shall be approximately 20-½ inches high x 12 feet long, heat treated, high carbon steel
- Upper deflector or "folding flap" shall be ½ inch x 10 inches and welded at its bottom side with a hinge line to connect to the lower mold board "backer plate"
- Lower mold board shall consist of two (2) pieces
- "Backer plate" shall be 5/8 inch thick x 6 inches high and include the pivot hinge line for raising and lowering the blade
- Lower section of mold board shall be ¾ inch x 9 inch, heat treated, press formed with pressed in offset for USS blades, AASHO punched and capable of mounting a 5/8 inch x 6 inch x 4 foot carbide edges. It shall be bolted to lower "backer plate".
- Mold board assembly, actuating cylinders and reversing circle shall be shipped as a complete unit
- Hanger brackets, reversing cylinders and mounting box shall be packaged with each scraper

8. B. MOLD BOARD HINGE

- Mold board hinge shall consist of seamless DOM tubing, 1-¼ inch OD x 13/16 ID and a ¾ inch solid cold rolled 1018 steel hinge shaft the full length of mold board
- Ends of hinge shall be encapsulated and supported by two (2) ¾ inch gussets to/from the upper and lower deflector pieces
- Gussets shall be notched and fitted to the deflectors, welded top and bottom, both sides
- This additional area at the ends of the mold boards shall add strength at the ends of the hinge shaft, eliminating the mold board hinge tubing from breaking away from deflectors

8. C. REVERSING TABLE (CIRCLE)

- Reversing table (circle) shall be 1 inch thick solid one piece circle, no notches, with infinite plowing positions available to 45°
- Because of rear wing installation, circle must **not** exceed 55-¼ inches in length
- To maximize circle strength and durability, the cut outs for the hanger board 3 inch pin bosses, shall **not** exceed 4-5/8 inch wide x 15 inches long and follow the contour of the circle
- Power reversing shall be accomplished with two (2) 4 inch ID, 4-½ inch OD, double acting cylinders
- Power reverse double acting cylinders shall provide a hydraulic lock for holding mold board in place while in use
- Cylinder rods shall be Socatri 1000, 2 inch diameter, cast iron heads, 2 inch thick base and rod ends with grease zerks
- Heads shall have external locks to prevent backing out and poly pack seals on the head and piston
- Cylinders shall be mounted with 2 inch hardened pivot pins
- Pivot pins shall be zinc coated and have spiraled grease groove
- Cross over relief (cushion) valve will be furnished and set for 1,800psi and 30gpm for reversing protection
- Reversing circle with hardened center bushing (RC 51-58), shall pivot on a hardened 5 inch center pin with a 3 port grease journal, 5/16 inches wide x 3/16 inches deep full circumference grease groove and be attached with three (3) 3-¾ inch grade 8 mounting bolts to prevent hole elongation and will be lubricated with a grease zerk
- Circle clamp blocks shall be 20 inch long x 7 inches deep minimum and shall make full contact with the circle when fully reversed at 45° on both the right and left sides
- Circle clamp blocks shall be contoured to the circle and bolted to the hanger board with three 1 inch grade 8 bolts as close to the circle as possible for maximum strength
- Circle clamp blocks shall have 3/8 inch UHMW poly wear plate for ease of movement of hanger board and replacement
- Rear of circle for the reversing cylinder mounts shall be braced by a ¾ inch x 3 inch bars gusset under the bottom side and the bracing to support the rear cylinder pin and boss
- Because of rear wing mount, additional circle support from the chassis frame to the circle at the rear will **not** be acceptable
- The hold down block shall include a lower half welded to the hanger plate, which will act as a stop block against the rear of the circle for a positive stop

8. D. HANGER BRACKETS

- Hanger brackets shall be one piece solid ¾ inch x 22 inch x 25-½ inch, A36 or equal steel plate for maximum strength
- Hanger brackets to have 7 inch x 7 inch hand hole cut outs

8. E. HANGER BOARD

- Hanger board or mold board headboard shall consist of approximately 1 inch x 10 inch x 103 inch heavy duty steel

8. F. POWER ACTUATION

- Power actuation shall be relative to horizontal axis and shall be accomplished through at least two (2) hydraulic steel cylinders mounted beneath the hanger board, activating the mold board's up and down movement –**includes a J50 relief valve for actuating cylinder protection(required for warranty protection).**

8. G. MAIN HINGE

- Hinge line shall be solid shaft 1-½ inch diameter cold rolled 1018 steel
- Hinge tubing shall be 2-1/8 inch OD x 1-9/16 inch ID pre-channel tube
- There shall be a minimum of 12 grease zerks on hinge shaft

8. H. MOLD BOARD ACTIVATION

- Mold board activation shall be accomplished by two (2) 3 inch ID double acting cylinders with 1-½ inch minimum nitrided piston rods
- Cylinders are to have 9/16 inch ORB ports and supplied with 3/8 inch, 2 wire hydraulic hose and tubing
- A 250-1000 psi adjustable relief valve with ½ inch ports shall be supplied with the scraper
- Hydraulic tubing shall be retained with a minimum of four (4) machined polymer hold down blocks
- Hydraulic hose inside tubing shall **not** be acceptable

8. I. CYLINDERS AND PISTONS

Cylinders shall be trunnion mounted so with the mold board operating in the down position, the application of pressure on the piston shall be at the end of the cylinder opposite the piston rod

<u>Cylinders shall have:</u>

a) 3 inch inside diameter minimum
b) 5,000psi bursting pressure minimum

c) 2,500psi working pressure
d) Ground or polished inside cylinder surface
e) Polypak (type B) cylinder packing
f) Internal thread type head glands with two (2) locks to prevent backing out

- Pistons, cylinder heads and packing glands shall be either aluminum or cast steel
- Cylinder heads shall be designed such that head nut cracking will not occur after it is tightened
- Piston rods shall be high carbon nitrided steel

8. J. SHOCK ABSORBERS

- Cushioning of the mold board shall be with four (4), heavy duty, long travel springs with 1-¼ inch cold rolled shafts, threaded at the top and double nutted for adjustable spring tension
- Springs shall be 3-3/8 inch OD and 5,500 pound solid capacity each

8. K. STANDARD EQUIPMENT

- Schedule 40 pipe for hydraulic tubing shall be externally mounted and clamped in machined polymer brackets for ease of maintenance
- **All** fabricated sub-components shall be shot blasted and powder coated black prior to assembly
- All bolts, nuts, and washers shall be Grade 8
- **No** cutting edges shall be furnished

ITEM 9 - SPECIFICATION #55-MOPBLD.C14

UNDER-BODY SCRAPER, MOP STYLE SNOW BLADE,HYDRAULIC ANGLING – (Make/Model) Monroe/MS4512 or equal

GENERAL SUMMARY

The following specification is for under-body scrapers/snow blades, with a single hinge "mop style", and hydraulically operated for raise/lower and angling. It shall consist of a heat treated high carbon moldboard approx. 1 inch thick x 20 inches wide x 12 foot long. The unit will be complete with hanger board, dual swing cylinder circle, hydraulic lift & swing cylinders and mounting plates with hardware. Unit must be capable of mounting 5/8 inch x 6 inch x 4 foot carbide cutting edges. All parts whether or not specifically mentioned, but necessary to provide a complete operating unit or which are normally furnished as standard equipment shall be supplied and shall conform in strength, quality of material, and workmanship to best commercial practice.

MDOT will install these scraper blades on 44,000 GVW single axle 4 x 2, dump trucks with chassis measurements of approximately 186 inch W.B., 108 inch C.A. and 171 inch C.E. or 64,000 GVW tandem axle 6 x 4, dump trucks with chassis measurements of approximately 211 inch W.B., 136 inch C.T. and 213 inch C.E.

9. A. MOLD BOARD

- Mold board shall be 1 inch thick x 20 inches high x 12 feet long, heat treated 1045 carbon steel, 185 Brinnell Hardness, 89 ksi tensile strength, press formed with pressed offset for cutting edges, and AASHO punched for mounting USS blades, roll formed shall not be acceptable
- Blades shall have hole spacing for 5/8 inch x 6 inch x 4 feet, carbide cutting edges
- Blades shall have two (2) holes of a 3 inch spacing for each end of the 4 foot cutting edge
- Mold board shall be assembled to the circle, the reversing cylinders, hanger brackets and mounting box shall be shipped loose, but kitted with the scraper assembly

9. B. REVERSING TABLE (CIRCLE)

- Reversing table shall be 1 inch solid one (1) piece circle, no "notches", with infinite plowing positions available to 45°
- Because of rear wing installation, circle must **not** exceed 55-¼ inches in length
- To maximize circle strength and durability, the cut outs for the hanger board 3 inch pin bosses, shall **not** exceed 4-5/8 inch wide x 15 inches long and follow the contour of the circle
- 5 inch ID x 6.5 inch OD x 1 inch hardened center bushing in circle
- Power reversing shall be accomplished with two (2) 4 inch ID, 4-½ inch OD, double acting cylinders
- Power reverse double acting cylinders shall provide a hydraulic lock for holding mold board in place while in use
- Cylinder rods shall be Socatri 1000 treated, 2 inch diameter, cast iron heads, 2 inch thick base and rod ends with grease zerks
- Heads shall have external locks to prevent backing out and poly pack seals on the head and piston
- Cylinders shall be mounted with 2 inch hardened pivot pins
- Pivot pins shall be zinc coated with spiraled grease groove
- Cross over relief (cushion) valve shall be furnished and set for 1,800psi and 30gpm for reversing protection
- Reversing circle with hardened center bushing (RC 51-58), shall pivot on a hardened 5 inch center pin with a 3 port grease journal, 5/16 inch wide x 3/16 inch deep full circumference grease groove and be attached with (3) ¾ inch grade 8 mounting bolts to prevent hole elongation and shall be lubricated with a grease zerk
- Center pin shall be piloted ½ inch deep x 5 inch diameter into hanger board
- Circle clamp blocks shall be 20 inch long x 7 inches deep minimum and shall not extend beyond the circle when fully reversed at 45 degrees in both left and right rotation

- Circle clamp blocks shall be contoured to the circle and bolted to the hanger board with three 1 inch grade 8 bolts as close to the circle as possible for maximum strength
- Circle clamp blocks shall have 3/8 inch UHMW poly wear plate for ease of movement of hanger board and replacement
- Rear of circle for the reversing cylinder mounts shall be braced by a ¾ inch x 3 inch bar gusset under the bottom side and the bracing to support the rear cylinder pin and boss
- Because of rear wing mount, additional circle support from the chassis frame to the circle at the rear shall **not** be acceptable
- The hold down block shall include a lower half welded to the hanger plate, which shall act as a stop block against the rear of the circle for a positive stop

9. C. HANGER BRACKETS

- Hanger brackets shall be one piece solid ¾ inch x 22 inch x 25-½ inch, A36 or equal steel plate for maximum strength The hanger brackets shall include 7 inch x 7 inch cutouts, centered in the plate just above the top of the circle

9. D. HANGER BOARD

- Hanger board shall consist of formed ½ inch plate and reinforced by ½ inch formed plate full length of the hangerboard
- Cylinder pin mounting tubes shall be 3 inch OD, reinforced at the base with two (2) ½ inch plates
- Hinge tubes shall be 3-¼ inch OD.344 inch wall thickness, 36 inches long with two (2) grease zerks each
- Hanger board cut out for center hinge shall have a ½ inch stiffener plate full width front to rear that adds an anchor point for pin bosses and adds thrust plate for ends of hinge tubes
- Outer canister mounting arm must be bolted to the hanger board. Welded arms are not acceptable

9. E. HINGE

- Hinge line shall be a solid shaft 96 inches long and have three (3) mold board anchor points
- Hinge shaft shall be 2-½ inch diameter cold rolled 1018 steel with the two (2) outer hinges being 3-¼ inch x 6 inch and one (1) center hinge being 3-½ inch x 10-¾ inch minimum in length and .344 inch wall thickness mechanical tubing
- Hinge shall be reinforced with one (1) wrap around ½ inch gusset on the outer two (2) and two (2) gussets on the inner hinge
- Three heavy duty hinges shall be located to minimize stress along the hanger board for maximum strength
- There shall be four (4) grease zerks on the hinge shaft
- Inner hinge shall have two thrust plates to prevent side to side shifting of the mold board

9. F. MOLD BOARD ACTIVATION

- Mold board actuation shall be accomplished by two (2) 3-½ inch ID x 10 inch stroke minimum double acting cylinders with 2 inch minimum Socatri 1000 treated piston rods
- Cylinders shall have 3/8 inch NPT ports, cast iron heads, poly pack seals and 2-¼ inch diameter x 1-¾ inch wide cross tube on the rod side with grease zerks. - **includes a J50 relief valve for actuating cylinder protection (required for warranty protection).**.
- Cylinders shall have a ½ inch x 5-¾ inch diameter flange with a ½ inch x 1-3/8 inch guide tang reinforced to the 3/8 rod port with ½ inch bar to protect the port
- A 250-1000 psi adjustable relief valve with ½ inch ports shall be supplied with the scraper
- Canister cylinder assembly shall be retained by a four (4) bolt minimum ½ inch flange assembly with an internal ½ inch x 1-½ inch ring
- Canister cylinders shall be mounted in shock housings with a 1-½ inch cylinder guide at the top and a 1-½ inch x 6 inch relief slot at the bottom, which are trunnion mounted with ¾ inch thick reinforced steel trunnion brackets
- Trunnion bearings shall be 2-¾ inch x .344 inch wall thickness carbon steel, lubricated by two (2) grease zerks per cylinder at the trunnion mounts
- Canister trunion mount pins are 2 inch solid rod, bolt in removable design
- A grease zerk shall be provided at the cylinder head
- Mold board cushioning shall be through two (2) heavy duty shock assemblies with two (2) internally mounted 586lb/inch 13/16 inch wire AISI 5161 steel springs

9. G. STANDARD EQUIPMENT

- Hydraulic steel tubing shall be externally mounted with machined polymer hold down blocks
- Hoses, tubing, and ports on actuating cylinders shall be 3/8 inch NPT minimum
- Ports on reversing cylinders shall be ¾ inch ORB
- All fabricated sub-components shall be shot blasted and powder coated black prior to assembly
- A remote grease kit that allows grease to be applied at two centralized locations outside of the chassis frame shall be provided
- Grease kit hoses shall be SAE107 Hytron hose rated at 3000 psi maximum work pressure
- Grease line kit shall incorporate all grease points on the scraper including center pin, entire hinge line, cylinder pivot points, and canister trunion bearings

- All bolts, nuts, and washers shall be Grade 8
- Warranty on material and workmanship shall be 12 months, after vehicle in service date
- **No** cutting edges shall be furnished

ITEM 10 - SPECIFICATION # 57-0901SMW.C14

WING PLOW, BEHIND SCRAPER MOUNT, 9 FOOT, RIGHT OR LEFT – (Make/Model) Monroe/9DFWMB-PG or equal

GENERAL SUMMARY

The following specification is for 9ft, right or left, side behind scraper mounted wings, for mounting on tandem axle, 64,000 GVW, snow plow trucks with an underbody scraper blade. The tandem axle trucks will be mounted with a 14ft dump body with slide in spreader or combination body. On delivery to MDOT, it shall be completely equipped with all features necessary for its mounting and operation. The wing plow shall be built in accordance with all FMVSS, OSHA, MIOSHA, and ANSI standards. It must be the latest model in current production, satisfactory to meet the performance and design characteristics required in the specification.

- Wings shall be designed to mount behind the underbody blade and shall have a mold board length of 113 inches at the top and 108 inches at the bottom
- Mold board height shall measure 33 inches inboard and 33 inches outboard with cutting edge
- Mold board shall be 3/16 inch A36 steel
- Top of mold board shall be formed into a 2-¾ inch x 1 inch channel for additional strength
- Top flange of moldboard shall have holes located 6 inches from each end and 12 inches on center for full length of moldboard, drilled prior to powder coat
- MDOT assigned unit numbers shall be welded to the top flange at the toe end of the moldboard
- Bottom angle shall be 4 inch x 4 inch x ¾ inch and reinforced between the cutting edge holes with ten (10) 3 inch x 3 inch x ½ inch gussets
- There shall be six (6) ½ inch mold board reinforcement ribs tapered from 4 inches at the bottom to 2-½ inches at the top
- There shall be two (2) horizontal reinforcement angles between the discharge end last two ribs, bottom 4 inch x 3 inch x ½ inch reinforcement angle shall have seven (7) evenly spaced 5/8 inch holes for pusharm adjustment, top 4 inch x 4 inch x ½ inch reinforcement angle shall have seven (7) evenly spaced 5/8 inch holes for pusharm adjustment
- Front attachment pivot plate will be ½ inch steel, completely boxed and supported with ½ inch and 3/16 inch plate
- Pivot tube for the 1-½ inch pivot bolt shall have a minimum .625 inch wall and be welded 100% to the inside of the ½ inch plate and outside of the mold board
- A ½ inch safety stop eyelet shall be on the front of the mold board and a ½ inch centered lift loop
- All seems and joints shall be 100% continuous welded
- Cutting edge shall be fabricated of 1084 hot rolled steel
- Cutting edge shall be 9 feet in length and 5/8 inch x 8 inch AASHO punched
- Mold board shall be equipped with mold board shoes
- Shoes shall be bolted on with the cutting edge
- One (1) shoe shall be installed on both the toe end and the heel end
- Shoes shall be heavy duty cast iron construction
- Base of shoe shall be 10 inches long x 4-½ inches wide x 4-½ inches thick
- Bottom of shoe shall be cut at approximately 10° angle to match attack angle of mold board
- A ½ inch x 4 inch x 6 inch cross tube passing thru two (2) mounting plates shall attach the wing to the frame of the truck
- Side plates shall be 5/8 inch thick, 25-1/2 inches tall, 16 inches wide at the top, 10 inches wide at the bottom
- Side plates shall have 3 inch x 3 inch x 3/8 inch angle welded to inside of the plate to butt to bottom flange of the chassis frame rail
- Each side plate shall have two (2) 2 inch x ½ inch bar stock reinforcement bars welded to the outside of the side plate contoured to the shape of the side plate
- The cross tube shall pass behind the underbody blade “circle”
- The front wing post shall be welded to the cross tube
- Front post shall be of trailing link, free floating, design
- Wing post must be able to be mounted under a dump body without adding to chassis CA
- The post front structure shall be no more than 24 inches high and 14 inches wide
- Post is manufactured with a ¾ inch inside plate and a matching ½ inch outer plate
- Inner and outer plates shall be reinforced inside with 3/8 inch Ex-Ten 50 and ½ inch plate
- The front post shall be an anchor point for the three trailing link assemblies; one (1) lift link and two (2) float links
- All link arms shall be oriented parallel to the chassis frame
- Upper and lower link arms shall be ¾ inch bar stock with 1-3/4 inch machined hole on each end
- Float link arms shall be joined and reinforced with 2-1/2 inch schedule 80 pipe and ½ inch plate
- Lift link arms shall be ½ inch plate joined and reinforced with 2-1/2 inch schedule 80 pipe and 1 inch plate
- Upper and lower float arms shall be linked with ½ inch inner and 1 inch outer lift bars
- Lift bars shall have 1-3/4 inch machined holes at both ends
- Outer 1 inch lift bar shall have three (3) 1 inch ears to accept the pin for the wing mounting plate
- 3 inch OD x 5 inch double acting lift cylinder, 1-1/2 inch nitride rod

- Cylinder shall be attached with 1 inch stress proof pins, machine washers and roll pins.
- All 1-3/4 inch machined holes in all link arms shall have Rc 50 hardened bushings
- Hinge pins shall be 1-1/2 inch OD, case hardened to Rc 55-60
- All hinge pins shall be rifle and cross drilled with grease zerks on both ends
- Entire front post assembly including the cross tube and side plates shall be shot blasted and powder coated black prior to assembly
- A 1 inch thick reinforced banjo mounting plate shall be pinned to the post and bolted to the moldboard
- Pin for banjo plate shall be 1-½ inch diameter
- Banjo plate/hinge for moldboard shall be fabricated of 1 inch material, reinforced with ½ inch bar and have four (4) 1 inch thick reinforced ears for the hinge pin
- The bolt for retaining the mold board shall be 1-½-6 x 7 G8 HHCS Zinc plated with castle nut and cotter pin
- Bolt shall be drilled for the cotter pin
- Lifting action for the heel end of the wing shall be accomplished via a single 3 inch ID x 15 inch stroke, nitrated 2 inch rod, ¾-16ORB ports, polypak seals, double acting hydraulic deceleration cylinder.
- Heel cylinder shall be attached to the upper rear pusharm slide assembly
- Wing shall be operated by hydraulic lift, **no cables or chains shall be accepted**
- Rear wing mount shall be fabricated from 4 inch x 6 inch x ½ inch steel tube, and shall include one (1) 12 inch x 15 inch x ½ inch plate and six (6) 3 inch x 3 inch x ½ inch gussets for tube reinforcement
- Rear pusharm/cylinder mounting plate shall include two (2) ½ inch plates, flame cut with three (3) offset mounting holes to mount the rear pusharms and the heel lift cylinder fabricated from ½ inch plate
- Rear wing mounting post and rear pusharm/cylinder mounting plate with gussets shall be fully assembled and shot blasted and powder coated
- The rear upper pusharm shall be equipped with an external slide assembly to allow for mechanical float and attachment of the heel lift cylinder
- Rear pusharms and heel lift cylinder shall be attached with 1-¼ inch bolts for attach and detach
- There shall be two (2) rear wing heavy duty, 2-½ inch schedule 80, adjustable, spring cushioned lift arms including safety shear pins, 6 feet long fully extended
- Wing shall be capable of mounting with an overlap to the scraper discharge to prevent a windrow between the scraper and the wing mold board
- Wing shall have a minimum of 6-½ foot clearing path when in he winging position
- All fabricated components shall be shot blasted and washed prior to powder coating
- Mounting components shall be powder coated black
- All welding on the mold board shall be 100% continuous
- Mounting hardware shall include schedule 80 pipe bracing, two (2) pipe balls, a flame cut ¾ inch support plate, Grade 8 nuts, bolts, and washers necessary for a complete installation
- A sequencing valve shall be supplied with the wings
- Sequencing valve shall be adjustable for both the up sequencing of the wing and the down sequencing of the wing
- Lock valves shall be built into the sequencing valve to prevent both the toe and heel cylinder from drifting when in the stored position
- The sequencing valve shall allow wing to hydraulically drift up when in the plowing position
- Sequencing valve shall be equipped with an adjustable metering valve to control the speed at which the blade drops when going from the stored position to the plow position
- Each wing assembly shall be furnished with an epoxy sealed, magnetic proximity switch, Grainger part # 6C834 or Omron type TL-W20ME2 12V - 24V to activate a “wing down” light, shipped loose (MDOT will furnish light) No Exceptions

ITEM 11 - SPECIFICATION # 57-0901SMWJR.C14x

JUNIOR WING PLOW, BEHIND SCRAPER MOUNT, 9 FOOT, RIGHT OR LEFT – (Make/Model) Monroe/9MJW-PG or equal

GENERAL SUMMARY

The following specification is for 9ft, right or left, side behind scraper mounted junior wings, for mounting on tandem axle, 64,000 GVW, snow plow trucks with an underbody scraper blade. The tandem axle trucks will be mounted with a 14ft dump body with slide in spreader or combination body. On delivery to MDOT, it shall be completely equipped with all features necessary for its mounting and operation. The snow plow shall be built in accordance with all FMVSS, OSHA, MIOSHA, and ANSI standards. It must be the latest model in current production, satisfactory to meet the performance and design characteristics required in the specification.

- Wings shall be designed to mount behind the underbody blade and shall have a mold board length of 113 inches at the top and 108 inches at the bottom
- Mold board height shall measure 27 inches inboard and 28 inches outboard with cutting edge
- Mold board shall be 3/16 inch A36 steel
- Top of mold board shall be formed into a 2-¾ inch x 1 inch channel for additional strength

- Wings shall be designed to mount behind the underbody blade and shall have a mold board length of 113 inches at the top and 108 inches at the bottom
- Mold board height shall measure 27 inches inboard and 28 inches outboard with cutting edge
- Mold board shall be 3/16 inch A36 steel
- Top of mold board shall be formed into a 2-¾ inch x 1 inch channel for additional strength
- Top flange of moldboard to have holes located 6 inches from each end and 12 inches on center for full length of moldboard, holes shall be drilled prior to powder coat
- MDOT assigned unit numbers shall be welded to the top flange at the toe end of the moldboard
- Bottom angle shall be 4 inch x 4 inch x ¾ inch and reinforced between the cutting edge holes with ten (10) 3 inch x 3 inch x ½ inch gussets
- There shall be five (5) ½ inch mold board reinforcement ribs tapered from 4 inches at the bottom to 2-½ inches at the top
- There shall be three (3) horizontal reinforcement angles between the discharge end last four ribs, 3 inch x 3 inch x ¼ inch reinforcement angle shall have seven (7) evenly spaced 5/8 inch holes for pusharm adjustment
- Front attachment pivot plate will be ½ inch steel, completely boxed and supported with ½ inch and 3/16 inch plate
- Pivot tube for the 1-½ inch pivot bolt shall have a minimum .625 inch wall and be welded 100% to the inside of the ½ inch pate and outside of the mold board
- A ½ inch safety stop eyelet shall be on the front of the mold board and a ½ inch centered lift loop
- All seems and joints shall be 100% continuous welded
- Cutting edge shall be fabricated of 1084 hot rolled steel
- Cutting edge shall be 9 feet in length and 5/8 inch x 8 inch AASHO punched
- Mold board shall be equipped with mold board shoes
- Shoes shall be bolted on with the cutting edge
- One (1) shoe shall be installed on both the toe end and the heel end
- Shoes shall be heavy duty cast iron construction
- Base of shoe shall be 10 inches long x 4-½ inches wide x 4-½ inches thick
- Bottom of shoe shall be cut at approximately 10° angle to match attack angle of mold board
- A ½ inch x 4 inch x 6 inch cross tube passing thru two (2) mounting plates shall attach the wing to the frame of the truck
- Side plates are 5/8 inch thick, 25-1/2 inches tall, 16 inches wide at the top and 10 inches wide at the bottom.
- Side plates will have 3 inch x 3 inch x 3/8 inch angle welded to the inside of the plate to butt to bottom flange of the chassis frame rail
- Each side plate shall have two (2) 2 inch x ½ inch bar stock reinforcement bars welded to the outside of the side plate contoured to the shape of the side plate
- The cross tube shall pass behind the underbody blade “circle”
- The front wing post shall be welded to the cross tube
- Front post shall be of trailing link, free floating, design
- Wing post must be able to be mounted under a dump body without adding to chassis CA
- The post front structure shall be no more than 24 inches high and 14 inches wide
- Post is manufactured with a ¾ inch inside plate and a matching ½ inch outer plate
- Inner and outer plates shall be reinforced inside with 3/8 inch Ex-Ten 50 and ½ inch plate
- The front post shall be an anchor point for the three trailing link assemblies; one (1) lift link and two (2) float links
- All link arms shall be oriented parallel to the chassis frame
- Upper and lower link arms shall be ¾ inch bar stock with 1-3/4 inch machined hole on each end
- Float link arms shall be joined and reinforced with 2-1/2 inch schedule 80 pipe and ½ inch plate
- Lift link arms shall be ½ inch plate joined and reinforced with 2-1/2 inch schedule 80 pipe and 1 inch plate
- Upper and lower float arms shall be linked with ½ inch inner and 1 inch outer lift bars
- Lift bars shall have 1-3/4 inch machined holes at both ends
- Outer 1 inch lift bar shall have three (3) 1 inch ears to accept the pin for the wing mounting plate
- 3 inch OD x 5 inch double acting lift cylinder, 1-1/2 inch nitride rod
- Cylinder shall be attached with 1 inch stress proof pins, machine washers and roll pins.
- All 1-3/4 inch machined holes in all link arms shall have Rc 50 hardened bushings
- Hinge pins shall be 1-1/2 inch OD, case hardened to Rc 55-60
- All hinge pins shall be rifle and cross drilled with grease zerks on both ends
- Entire front post assembly including the cross tube and side plates shall be shot blasted and powder coated black prior to assembly
- A 1 inch thick reinforced banjo mounting plate shall be pinned to the post and bolted to the moldboard
- Pin for banjo plate shall be 1-½ inch diameter
- Banjo plate/hinge for moldboard shall be fabricated of 1 inch material, reinforced with ½ inch bar and have four (4) 1 inch thick reinforced ears for the hinge pin
- The bolt for retaining the mold board shall be 1 ½-6 x 7 G8 HHCS Zinc plated with castle nut and cotter pin

- The bolt for retaining the mold board shall be 1 ½-6 x 7 G8 HHCS Zinc plated with castle nut and cotter pin
- Lifting action for the heel end of the wing shall be accomplished via a single 4 inch ID x 10 inch stroke, nitrated 2 inch rod, ¾-16ORB ports, polypak seals, double acting hydraulic deceleration cylinder.
- Heel cylinder shall be attached to the front banjo plate and the lower moldboard float link assembly
- Wing shall be operated by hydraulic lift, **no cables or chains shall be accepted**
- Rear wing mount shall be fabricated from 4 inch x 6 inch x ½ inch steel tube, and shall include one (1) 12 inch x 15 inch x ½ inch plate and six (6) 3 inch x 3 inch x ½ inch gussets for tube reinforcement
- Rear pusharm mounting plate shall include two (2) ½ inch plates, flame cut with three (3) offset mounting holes to mount the rear pusharm-fabricated from ½ inch plate
- Rear wing mounting post and rear pusharm mounting plate with gussets shall be fully assembled and shot blasted and powder coated
- Rear pusharm shall be attached with 1-¼ inch bolts for attach and detach
- There shall be one (1) rear wing heavy duty, 2-½ inch schedule 80, adjustable, spring cushioned lift arms including safety shear pin~~s~~, 6 feet long fully extended
- Wing shall be capable of mounting with an overlap to the scraper discharge to prevent a windrow between the scraper and the wing mold board
- Wing shall have a minimum of 6-½ foot clearing path when in the winging position
- All fabricated components shall be shot blasted and washed prior to powder coating
- Mounting components shall be powder coated black
- All welding on the mold board shall be 100% continuous
- Mounting hardware shall include schedule 80 pipe bracing, two (2) pipe balls, a flame cut ¾ inch support plate, Grade 8 nuts, bolts, and washers necessary for a complete installation
- A sequencing valve shall be supplied with the wings
- Sequencing valve shall be adjustable for both the up sequencing of the wing and the down sequencing of the wing
- Lock valves shall be built into the sequencing valve to prevent both the toe and heel cylinder from drifting when in the stored position
- The sequencing valve shall allow wing to hydraulically drift up when in the plowing position
- Sequencing valve shall be equipped with an adjustable metering valve to control the speed at which the blade drops when going from the stored position to the plow position

  Each wing assembly shall be furnished with an epoxy sealed, magnetic proximity switch, Grainger part # 6C834 or Omron type TL-W20ME2 12V - 24V to activate a “wing down” light, shipped loose (MDOT will furnish light) No Exceptions

ITEM 12 - SPECIFICATION # 60-11SS.C14

HOPPER BOX MATERIAL SPREADER, 11 FOOT AND DISTRIBUTION SYSTEMS – (Make/Model) Monroe/MCV-132-84-50 or equal

GENERAL SUMMARY

The following specification is for slide in type hopper box material spreaders with rear y-chutes or cross augers to uniformly spread salt, sand or a combination of both for treatment of icy roads. They shall consist of an 84 inch wide x 11 foot long stainless steel hopper box, a pintle type flight chain conveyor, with a cross auger with left or right side spinner and hydraulic motor, or a cross auger with left side zero velocity spinner and hydraulic motor, or a y-chute spreader with spinner and hydraulic motor. The operation of the spreader will be controlled by a ground speed oriented hydraulic system supplied by MDOT. MDOT will install this spreader in a 44,000 GVW single axle truck with 11 foot dump box and a closed center load sensing hydraulic system.

12. A. SPREADER BODY

- Spreader body length shall be 11 feet
- Spreader overall height shall be approximately 50 inches without extensions or splices, one piece sides and ends
- Spreader shall be of modular, slot and tab design
- Spreader hopper is approximate 5.8 cubic yard capacity
- Spreader overall width shall be approximately 84 inches
- Spreader body and vertical bracing shall be 10 gauge type 201 stainless steel
- Longitudinal support members shall be 7 gauge type 201 stainless steel
- Longitudinals shall have a 24 inch bolt on replaceable rear tail section
- Tail section and the mating longitudinal shall have ¼ inch flanges reinforced with ¼ inch triangular gussets
- Bolts to secure tail section to longitudinal must be minimum ½ inch stainless steel
- Body sides shall have adequate pitch (approximately 45°) to insure free flow of material to the conveyor
- The eight (8) vertical braces shall be placed on approximate 24 inch centers, welded to the hopper sides and cross-members, in such a manner to allow future installation of two (2) 180 gallon liquid tanks
- End panels shall slope inward 25° on front panel and 20° on back panel
- Lateral cross-members shall be 3 inch x 1-1/4 inch x 39 inch x 7 ga type 201 stainless steel

- Cross-members shall set on a longitudinal stainless steel angle of 2 inch x 3 inch x ¼ inch
- Top of body shall be strengthened by flanging the edges to form a 2 inch x 1 inch channel
- Hopper shall have a 2 inch x 2 inch x 7 ga upper cross angle that ties the sides together and provides support for top screen center beam
- A heavy duty 5/8 inch bolt on lift loop shall be provided at each corner of the hopper
- Additional reinforcement on both the inside and outside of the body is required to support hold down brackets
- Front of the body shall be drilled to accept MDOT furnished rubber bumpers, location to be determined at preconstruction meeting
- Two (2) hold down brackets constructed of 6 inch x 5 inch x ¼ inch stainless steel plate with a 3 inch tall piece of 5 inch stainless steel channel welded to the center shall be welded to the body centered 16 inches back of front bulkhead on the sloped surface centered 3 inches below the breakline, one (1) each side
- Spreader shall be equipped with a bolt-in conveyor floor of 7 ga type 201 stainless steel supported with a combination of 10 ga angles, 7 ga flat bar, and 7 ga formed channel
- A wiper belt shall be at the rear most end of the floor to direct material into the center region of the chute assembly
- Wiper belt in the front to prevent material leakage
- Long sills shall be slotted each end with openings at the extreme ends for ease of idler and drive sprocket shaft replacement
- Long sills shall have an additional 2 inch x 2 inch x ¼ inch stainless steel angle welded to the bottom of each side to support the cross auger

12. B. FEED GATE OPENING

- A 10 gauge type 201 stainless steel feed gate approximately 12 inch x 18 inch with a ruler, shall be provided in the unloading end of the box with a heavy duty screw type mechanism with ½ inch stainless steel handle shall regulate material discharge
- The crank handle shall be extended so that it is not more than 72 inches from the ground with the V box installed
- Handle screw type mechanism shall be located on the driver's side of spreader
- Feed gate shall be adequately braced with a 24 inch embossment just above the door opening

12. C. CONVEYOR

- Conveyor shall be maximum 24 inches wide, with heavy duty type 201 stainless steel bolt in chain shields over the chain strands, exposing only the drag bars to the material
- All chain joints and pins shall be thoroughly lubricated with salt resistant 9102 Syntemp from Lubrication Engineers, Fort Worth, Texas
- Conveyor chain shall be 667XH heat treated 2.25 pitch, self-cleaning, pintle-type with .224 inch link thickness, 15/32 inch diameter pins and a minimum average tensile strength of 26,000 pounds, manufactured in the USA
- Eight tooth cast iron sprockets with 1-½ inch drive and idler shafts, and four (4) bolt relubable flange bearings shall be provided
- Cross bars ½ inch x 1-½ inch x 18-¾ inches shall be positioned on approximately 2-¼ inch centers, welded top and bottom
- Overall chain width shall not exceed 22-¼ inches
- A heavy duty, spring loaded, idler adjustment assembly (sufficient to carry the extra load or weight of the conveyor chain with added cross bars), shall provide 9 inches of travel for proper conveyor chain tension. Spring must be rated at a minimum of 708 PSI and be 6 inches long 2.187 inch OD
- Adjuster screw shall be a minimum of ¾ inch stainless steel
- Adjuster shall be extended so the adjustment can be made at the rear of the spreader with jam nuts at the rear

12. D. WELDS AND FASTENERS

- Hopper shall be robotically welded
- All welds shall be continuous, inside and outside and cleaned of weld slag and spatter
- Bolts on the spreader body shall all be 201 stainless steel

12. E. GREASE TUBES

- Grease tubes shall be provided from the front to the rear of the spreader body for ease of lubrication of front conveyor bearings (both sides)
- Grease hoses shall be SAE107 Hytron hose rated at 3000 psi maximum work pressure

12. F. HYDRAULIC MOTORS

- Spinner motors shall be manufacturers standard for the spreader capacity specified
- Spinner disc fins shall be designed for clockwise rotation
- Conveyor drive motor shall be a White Roller Stator and equipped with a Hall effect type speed sensor that produces 100 or more pulses per revolution

12. G. GEAR REDUCTION CONVEYOR DRIVE

- Gear reduction shall be approximately 50:1 with hardened, precision- machined, worm type gear with Timken tapered roller bearings on the output shaft
- Gear case shall be oil tight, equipped with filler, drain, and oil level drain plugs
- Conveyor motor shall be mounted directly to the gear case

- Conveyor drive motor shall be positioned on the forward side of the gearbox
- Offset gearbox mounting plate shall be minimum ¼ inch type 201 stainless steel
- Gearbox driveshaft shall not extend beyond case opposite the drive motor
- A coupling with a ½ inch shear bolt shall be provided between the gear box and the conveyor drive shaft
- A shear key inside the gear box is **NOT** acceptable

ITEM 12.1 - Option 1 - Reversing rear cross auger with side spinner – (Make/Model) Monroe/MS969 or equal

12.1. CROSS AUGER

- Cross auger shall be capable of moving free-flowing granular material to either a left or right opening
- Trough, lids and bottom assembly shall be 7 gauge 201 stainless steel with ¼ inch one-piece endplates and 96 inch overall width
- The rear of the conveyor shall be reinforced with a 2 inch x 5 inch x 7 gauge tube with the bottom trough latch system attached to this tube
- A 7 gauge, four (4) sided, 201 stainless steel chute extension shall be designed to lower the cross auger assembly to allow discharge on to a spinner or direct placement attachment. The chute shall be height adjustable
- The chute extension shall allow unloading of the hopper box without going through the cross auger
- Chute extension shall have a grate assembly to prevent chunks from entering the auger
- The three-piece combination cover and top openings shall be designed to be mounted to the bottom of the reinforced longsills on a hopper box
- The unobstructed, hinged bottom shall allow clogged material to drop out when it is opened for easy cleanout
- A centered 201 stainless steel lift handle shall be included
- Bottom trough shall have three (3) solid ½ inch pipe hinges
- Bottom opening shall have a removable door that can be either left or right mount
- Bottom trough door shall have return bends at both the hinge and handle sides of the door
- Bottom door shall have a center handle
- All latches shall be captive, heavy duty 201 stainless steel that will work in the coldest weather without the use of tools and (the need for) have a safety lock
- Latches are located approximately 48 inches apart
- Latches must pinch and retain the lip of the trough door against the rear trough cross
- Endplates shall have convenient chain hoist lifting slots placed at the balance points to provide easy level mounting and dismounting of the conveyor
- Auger shall be a full 7 foot in length with one-way flighting for left or right hand discharge of material
- Auger shall be 9 inch diameter, 4 inch pitch and 5/16 inch thick on the outer edge and welded to a 2-7/8 inch OD schedule 40 pipe EWR pipe/tubing
- Shafts shall be 1-½ inch and supported by a heavy duty 1-½ inch sealed, self-aligning, relubable four (4) bolt flange bearing
- The exposed end of the shaft on the opposite end of the motor shall include a stainless steel cover
- Auger shall be driven by a hydraulic, direct drive motor, 28 cubic inch, 1-¼ inch – 14 spline shaft with 7/8 inch O-ring ports
- Shaft coupler shall be stainless steel
- MDOT can order the cross auger with either left hand or right hand mounted motor as deemed necessary
- The spinner assembly is mounted to the bottom cleanout door and has an easy one man mount and dismount
- Spinner disc shall be 18 inches in diameter and manufactured from polyurethane material
- Six (6) formed spinner flights shall be manufactured from polyurethane
- Spinner disc shall be mounted directly to the hydraulic motor by means of a cast iron spinner hub
- Spinner motor shall be a low speed high torque motor
- Spinner motor shall have seal saver greaseable cavity
- Spinner shall be completely adjustable for all normal variations of spread patterns
- All interior seams shall be continuously electronically welded to eliminate corrosion pockets
- Mounting hardware shall be 201 stainless steel and provided
- All stainless steel parts shall be in bare stainless
- All mild steel parts shall be painted black

ITEM 12.2 - Option 2 - Zero velocity spreader – (Make/Model) Monroe/ACCU-PLACE or equal

12.2. ZERO VELOCITY SPREADER

- Spreader housing shall be 10 gauge 201 stainless steel
- Housing shall have a 12 inch x 14 inch opening with three flexible bolt on flares to divert material into housing
- Housing opening shall have two (2) safety bars of 3/16 inch 201 stainless steel to prevent large objects from entering housing opening
- Spreader impeller shall dispense material onto roadway, and be manufactured from type 201 stainless steel and shall include replaceable end bits

- Impeller shall have four (4) 4-¾ inch x 4 inch paddles, 16 inches in diameter with a 1 inch bore steel hub integrally welded to impeller
- Impeller motor shall be low speed/high torque “orbital type” hydraulic wheel motor with 3 cu/in displacement
- Motor shall be capable of applications up to 800rpm
- Motor shall be Parker type with a stainless steel output shaft
- Impeller drive shaft shall extend through both sides of the housing and is supported by a greaseable bearing on the housing side opposite the drive motor
- An in line flow meter with a hall affect speed sensor shall be provided with a Brad Harrison type connector to interface with control console
- A sensor cable with LED indicator lights shall be provided to interface the Hall Effect flow meter sensor to a Dickey-john Control Point controller
- Spinner assembly shall be mounted with approximately 6 inches ground clearance and be adjustable in height
- Mount bracket(s) MUST have MDOT written approval
- Spinner assembly shall lift 6 inches by actuating in cab switch
- Spinner assembly shall rotate 45° right and left of center position by actuating remote in cab switch
- Direction of spinner assembly shall be displayed on console by indicator lights

- Spinner assembly shall include up/down actuating cylinder, right/left actuating cylinder with a built in position sensor, and a deflector actuating cylinder
- A closed center, electric actuated valve shall be provided with the zero velocity spinner to control the up/down, right/left, and deflector functions
- Cab controls for the zero velocity spinner shall include switches for up/down, right/left, deflector up/down, a position display, and all necessary wiring harnesses to interface the controls to the valve

ITEM 12.3 - Option 3 - "Y" chute distributor – (Make/Model) Monroe/ or equal

12.3. “Y” CHUTE DISTRIBUTOR

- Bid shall include non-stainless “Y” chute distributor, fabricated and assembled as noted in the following MDOT drawings (Exhibit C) except where this specification differs, specification takes precedence: 63-790-1 (1/98) 63-790-2 (6/87) 63-790-3 (1/98) 63-790-4 (6/87)
- All “Y” chute assemblies shall have both right and left drop chutes **(Exceeds drawings)**
- A 1 inch x ¼ inch safety guard shall be welded at the top of the cutout for the spinner
- Chute assemblies shall be designed to be fastened to the 2 inch x 2 inch x ¼ inch type 201 stainless angle members of the spreader body with six (6) 3/8 diameter grade 5 bolts
- Chute assemblies shall be powder coated orange to match Dupont IMRON #43106-U or equal
- Chute assemblies may be shipped loose and separate from spreaders
- Vendor shall supply air cylinders to operate both the directional and drop chute doors
- Cylinders shall be 1-½ inch x 4 inch and have a stainless steel rod and bore with poly piston head
- Cylinders shall be mounted and functional upon delivery
- Hinges for the chute doors shall be constructed of type 201 stainless steel **(Exceeds drawings)**
- Each door shall have three (3) hinges, a continuous hinge is not acceptable **(Exceeds drawings)**

ITEM 13 - SPECIFICATION # 60-14SS.C14

HOPPER BOX MATERIAL SPREADER, 14 FOOT AND DISTRIBUTION SYSTEMS – (Make/Model) Monroe/MCV-168-84-56 or equal

GENERAL SUMMARY

The following specification is for slide in type hopper box material spreaders to uniformly spread salt, sand or a combination of both for treatment of icy roads. They shall consist of an 84 inch wide x 14 foot long stainless steel hopper box, a pintle type flight chain conveyor, with a cross auger with left or right side spinner and hydraulic motor, or a cross auger with left side zero velocity spinner and hydraulic motor, or a y-chute spreader with spinner and hydraulic motor. The operation of the spreader will be controlled by a ground speed oriented hydraulic system. MDOT will install this spreader in a 64,000 GVW tandem axle truck with 14 foot dump box and a closed center load sensing hydraulic system.

13. A. SPREADER BODY

- Spreader body length shall be 14 feet
- Spreader overall height shall be approximately 56 inches without extensions or splices, one piece sides and ends
- Spreader shall be of modular, slot and tab design
- Spreader hopper is approximate 9.2 cubic yard capacity
- Spreader overall width shall be approximately 84 inches
- Spreader body and vertical bracing shall be 10 gauge type 201 stainless steel
- Longitudinal support members shall be 7 gauge type 201 stainless steel
- Longitudinals shall have a 24 inch bolt on replaceable rear tail section
- Tail section and the mating longitudinal shall have ¼ inch flanges reinforced with ¼ inch triangular gussets

- Bolts to secure tail section to longitudinal must be minimum ½ inch stainless steel
- Body sides shall have adequate pitch (approximately 45°) to insure free flow of material to the conveyor
- The ten (10) vertical braces shall be placed on approximate 24 inch centers, welded to the hopper sides and cross-members, in such a manner to allow future installation of two (2) 800 gallon liquid tanks
- End panels shall slope inward 25° on front panel and 20° on back panel
- Lateral cross members shall be 3 inch x 1-1/4 inch x 39 inch x 7 ga type 201 stainless steel
- Cross members shall set on a longitudinal stainless steel angle of 2 inch x 3 inch x ¼ inch
- Top of body shall be strengthened by flanging the edges to form a 2 inch x 1 inch channel
- Hopper shall have a 2 inch x 2 inch x 7 ga upper cross angle that ties the sides together and provides support for top screen center beam
- A heavy duty 5/8 inch bolt on lift loop shall be provided at each corner of the hopper
- Additional reinforcement on both the inside and outside of the body is required to support the hold down brackets

- Front of the body shall be drilled to accept MDOT furnished rubber bumpers, location to be determined at preconstruction meeting
- Two (2) hold down brackets constructed of 6 inch x 5 inch x ¼ inch stainless steel plate with a 3 inch tall piece of 5 inch stainless steel channel welded to the center shall be welded to the body centered 16 inches back of front bulkhead on the sloped surface centered 3 inches below the breakline, one (1) each side
- Spreader shall be equipped with a bolt-in conveyor floor of 7 ga type 201 stainless steel supported with a combination of 10 ga angles, 7 ga flat bar, and 7 ga formed channel
- A wiper belt shall be at the rear most end of the floor to direct material into the center region of the chute assembly
- Wiper belt in the front to prevent material leakage
- Long sills shall be slotted each end with openings at the extreme ends for ease of idler and drive sprocket shaft replacement
- Long sills shall have an additional 2 inch x 2 inch x ¼ inch stainless steel angle welded to the bottom of each side to support the cross auger

13. B. FEED GATE OPENING

- A 10 gauge type 201 stainless steel feed gate approximately 12 inch x 18 inch with a ruler, shall be provided in the unloading end of the box with a heavy duty screw type mechanism with ½ inch stainless steel handle shall regulate material discharge
- The crank handle shall be extended so that it is not more than 72 inches from the ground with the V box installed
- Handle screw type mechanism shall be located on the driver's side of spreader
- Feed gate shall be adequately braced with a 24 inch embossment just above the door opening

13. C. CONVEYOR

- Conveyor shall be maximum 24 inches wide, with heavy duty type 201 stainless steel bolt in chain shields over the chain strands, exposing only the drag bars to the material
- All chain joints and pins shall be thoroughly lubricated with salt resistant 9102 Syntemp from Lubrication Engineers, Fort Worth, Texas
- Conveyor chain shall be 667XH heat treated 2.25 pitch, self-cleaning, pintle-type with .224 inch link thickness, 15/32 inch diameter pins and a minimum average tensile strength of 26,000 pounds, manufactured in the USA
- Eight tooth cast iron sprockets with 2 inch drive and idler shafts, and four (4) bolt relubable flange bearings shall be provided
- Cross bars ½ inch x 1-½ inch x 18-¾ inches shall be positioned on approximately 2-¼ inch centers, welded top and bottom
- Overall chain width shall not exceed 22-¼ inches
- A heavy duty, spring loaded, idler adjustment assembly (sufficient to carry the extra load or weight of the conveyor chain with added cross bars), shall provide 9 inches of travel for proper conveyor chain tension. Spring must be rated at a minimum of 708 PSI and be 6 inches long 2.187 inch OD
- Adjuster screw shall be a minimum of ¾ inch stainless steel
- Adjuster shall be extended so the adjustment can be made at the rear of the spreader with jam nuts at the rear

13. D. WELDS AND FASTENERS

- Hopper shall be robotically welded
- All welds shall be continuous, inside and outside and cleaned of weld slag and spatter
- Bolts on the spreader body shall all be 201 stainless steel

13. E. GREASE TUBES

- Grease tubes shall be provided at rear of the spreader body for ease of lubrication of front conveyor bearings (both sides)
- Grease hoses shall be SAE107 Hytron hose rated at 3000 psi maximum work pressure

13. F. HYDRAULIC MOTORS

- Spinner motors shall be manufacturers standard for the spreader capacity specified
- Spinner disc fins shall be designed for clockwise rotation
- Conveyor drive motor shall be a White Roller Stator and equipped with a Hall effect type speed sensor that produces 100 or more pulses per revolution

13. G. GEAR REDUCTION CONVEYOR DRIVE

- Gear reduction shall be approximately 50:1 with hardened, precision- machined, worm type gear with Timken tapered roller bearings on the output shaft
- Gear case shall be oil tight, equipped with filler, drain, and oil level drain plugs
- Conveyor motor shall be mounted directly to the gear case
- Conveyor drive motor shall be positioned on the forward side of the gearbox
- Offset gearbox mounting plate shall be minimum ¼ inch type 201 stainless steel
- Gearbox driveshaft shall not extend beyond case opposite the drive motor

- A coupling with a ½ inch shear bolt shall be provided between the gear box and the conveyor drive shaft
- A shear key inside the gear box is **NOT** acceptable

ITEM 13.1 - Option 1 - Reversing rear cross auger with side spinner – (Make/Model) Monroe/MS969 or equal

13.1. CROSS AUGER

- Cross auger shall be capable of moving free-flowing granular material to either a left or right opening
- Trough, lids and bottom assembly shall be 7 gauge 201 stainless steel with ¼ inch one-piece endplates and 96 inch overall width
- The rear of the conveyor shall be reinforced with a 2 inch x 5 inch x 7 gauge tube with the bottom trough latch system attached to this tube
- A 7 gauge, four (4) sided, 201 stainless steel chute extension shall be designed to lower the cross auger assembly to allow discharge on to a spinner or direct placement attachment. The chute shall be height adjustable
- The chute extension shall allow unloading of the hopper box without going through the cross auger
- Chute extension shall have a grate assembly to prevent chunks from entering the auger
- The three-piece combination cover and top openings shall be designed to be mounted to the bottom of the reinforced longsills on a hopper box.
- The unobstructed, hinged bottom shall allow clogged material to drop out when it is opened for easy cleanout
- A centered 201 stainless steel lift handle shall be included
- Bottom trough shall have three (3) solid ½ inch pipe hinges
- Bottom opening shall have a removable door that can be either left or right mount
- Bottom trough door shall have return bends at both the hinge and handle sides of the door
- Bottom door shall have a center handle
- All latches shall be captive, heavy duty 201 stainless steel that will work in the coldest weather without the use of tools and have a safety lock
- Latches are located approximately 48 inches apart
- Latches must pinch and retain the lip of the trough door against the rear trough cross tube
- Endplates shall have convenient chain hoist lifting slots placed at the balance points to provide easy level mounting and dismounting of the conveyor
- Auger shall be a full 7 foot in length with one-way flighting for left or right hand discharge of material
- Auger shall be 9 inch diameter, 4 inch pitch and 5/16 inch thick on the outer edge and welded to a 2-7/8 inch OD schedule 40 pipe EWR pipe/tubing
- Shafts shall be 1-½ inch and supported by a heavy duty 1-½ inch sealed, self-aligning, relubable four (4) bolt flange bearing
- The exposed end of the shaft on the opposite end of the motor shall include a stainless steel cover
- Auger shall be driven by a hydraulic, direct drive motor, 28 cubic inch, 1-¼ inch – 14 spline shaft with 7/8 inch O-ring ports
- Shaft coupler shall be stainless steel
- MDOT can order the cross auger with either left hand or right hand mounted motor as deemed necessary
- The spinner assembly is mounted to the bottom cleanout door and have an easy one man mount and dismount
- Spinner disc shall be 18 inches in diameter and manufactured from polyurethane material
- Six (6) formed spinner flights shall be manufactured from polyurethane
- Spinner disc shall be mounted directly to the hydraulic motor by means of a cast iron spinner hub
- Spinner motor shall be a low speed high torque motor
- Spinner motor shall have seal saver greaseable cavity
- Spinner shall be completely adjustable for all normal variations of spread patterns
- All interior seams shall be continuously electronically welded to eliminate corrosion pockets
- Mounting hardware shall be 201 stainless steel and provided
- All stainless steel parts shall be in bare stainless
- All mild steel parts shall be painted black

ITEM 13.2 - Option 2 - Zero velocity spreader – (Make/Model) Monroe/ACCU-PLACE or equal

13.2. ZERO VELOCITY SPREADER

- Spreader housing shall be 10 gauge, 201 stainless steel
- Housing shall have a 12 inch x 14 inch opening with three flexible bolts on flares to divert material into housing
- Housing opening shall have two (2) safety bars of 3/16 inch 201 stainless steel to prevent large objects from entering housing opening
- Spreader impeller shall dispense material onto roadway, and be manufactured from type 201 stainless steel and shall include replaceable end bits
- Impeller shall have four (4) 4-¾ inch x 4 inch paddles, 16 inches in diameter with a 1 inch bore steel hub integrally welded to impeller
- Impeller motor shall be low speed/high torque "orbital type" hydraulic wheel motor with 3 cu/in displacement
- Motor shall be capable of applications up to 800rpm.
- Motor shall be Parker type with a stainless steel output shaft
- Impeller drive shaft shall extend through both sides of the housing and is supported by a greaseable bearing on the housing side opposite the drive motor
- An in line flow meter with a hall affect speed sensor shall be provided with a Brad Harrison type connector to interface with control console
- A sensor cable with LED indicator lights shall be provided to interface the Hall Effect flow meter sensor to a Dickey-john Control Point controller
- Spinner assembly shall be mounted with approximately 6 inches ground clearance and be adjustable in height
- Mount bracket(s) MUST have MDOT written approval
- Spinner assembly shall lift 6 inches by actuating in cab switch
- Spinner assembly shall rotate 45° right and left of center position by actuating remote in cab switch
- Direction of spinner assembly shall be displayed on console by indicator lights
- Spinner assembly shall include up/down actuating cylinder, right/left actuating cylinder with a built in position sensor, and a deflector actuating cylinder
- A closed center, electric actuated valve shall be provided with the zero velocity spinner to control the up/down, right/left, and deflector functions
- Cab controls for the zero velocity spinner shall include switches for up/down, right/left, deflector up/down, a position display, and all necessary wiring harnesses to interface the controls to the valve

ITEM 13.3 - Option 3 - "Y" chute distributor– (Make/Model) Monroe/ or equal

13.3. "Y" CHUTE DISTRIBUTOR

- Bid shall include non-stainless "Y" chute distributor, one for item 3 spreader, fabricated and assembled as noted in the following MDOT drawings (Exhibit C) except where this specification differs, specification takes precedence: 63-790-1 (6/87) 63-790-2 (6/87) 63-790-3 (6/87) 63-790-4 (6/87)
- All "Y" chute assemblies shall have both right and left drop chutes **(Exceeds drawings)**
- A 1 inch x ¼ inch safety guard shall be welded at the top of the cutout for the spinner **(Exceeds drawings)**
- Chute assemblies shall be designed to be fastened to the 2 inch x 2 inch x ¼ inch type 201 stainless angle members of the spreader body with six (6) 3/8 diameter grade 5 bolts
- Chute assemblies shall be powder coated orange to match Dupont IMRON #43106-U or equal
- Chute assemblies may be shipped loose and separate from spreaders
- Vendor shall supply air cylinders to operate both the directional and drop chute doors
- Cylinders shall be 1-½ inch x 4 inch and have a stainless steel rod and bore with poly piston head
- Cylinders shall be mounted and functional upon delivery
- Hinges for the chute doors shall be constructed of type 201 stainless steel **(Exceeds drawings)**
- Each door shall have three (3) hinges, a continuous hinge is not acceptable **(Exceeds drawings)**

ITEM 14 - SPECIFICATION # 04-PLOWJACK.1C14

AUTOMATIC COUPLING TRUCK PORTION HITCH ASSEMBLIES FOR SNOW PLOW TRUCKS – (Make/Model) Monroe/HH34 or equal

GENERAL SUMMARY

The following specification is for automatic coupling truck portion hitch assemblies to be mounted on MDOT Winter Maintenance Trucks. They must be the latest model in current production, satisfactory to meet the performance and design characteristics required in this specification. They shall be built in accordance with all FMVSS, OSHA, MIOSHA, and ANSI standards.

- Truck portion of the hitch shall be of the automatic snap coupling type
- Hitch assemblies shall be 34 inches wide and 42 inches in height
- The slide rails of the hitch shall be manufactured of .375 inch thick plate, formed from a 12.221 inch wide x 42 inch high plate
- Side rails shall be 9.858 inches deep with an inside radii of .406 forming a 2.5 inch wide front face

- Top and bottom 1 inch of the side rails will be tapered inward to prevent restriction with the mating plow portion
- The back inside of the slide plates will be reinforced with 3/8 inch x 2-½ inch x 2-½ inch angle

- Top and bottom cross member angle shall be 3-½ inch x 3-½ inch x .375 inch
- Bottom angle shall be supported with an additional angle inner brace of 2-½ inch x 2-½ inch x .375 inch
- Lift arm assembly shall be manufactured from ¾ inch plate, a solid 2 ½ inch diameter x 3 ¼ inch long lift shaft and shall have ½ inch plate provisions for attaching the plow lift cylinder with 1 inch pins
- Plow lift cylinders shall be 3 inch x 10 inch double acting with 1 inch pin at base and rod end, ¾-16 ORB ports (cylinders include a socrati rod)
- Bracing for the lift arm shall consist of two (2) 3/8 inch triangular plates and 3/8 inch angle and have a 1 inch pivot pin
- The enclosed spring loaded canisters shall have a tapered 1.875 inch machined pin that is induction hardened to 48-52Rc and to a case depth of .030 inches
- Canisters will be welded to the slide plates and reinforced with ½ inch triangular gussets
- Unlocking lever shall be of 3/8 inch x 1-½ inch bar with 3/8 inch round linkage rods connecting the canister pins
- Hitches shall be powder coated black
- Hitch slide plates shall be coated with a graphite anti-seize compound and shall be 100% continuously welded, **NO exceptions**

ITEM 15 - SPECIFICATION # HYD-PP.C14

HYDRAULIC SYSTEM, CLOSED CENTER, PISTON PUMP, GROUND SPEED CONTROLLED – (Make/Model) Rexroth/ or equal

GENERAL SUMMARY

The following specification is for hydraulic systems with a closed center sectional type load sensing valve and load sense/pressure compensated piston pump. The system is designed to control the functions of a Winter Maintenance Truck with a dump body (double acting lift cylinders for the box-up/down) and slide in spreader; or a combination body with cross auger and spinner. It shall also operate standard functions such as underbody blade with swing and front plow with swing. All units will be equipped to control pre-wetting systems with granular spreaders and mid mount wings. Spreader functions shall be ground speed controlled with in-cab display and control (supplied by separate vendor). All specifications contained herein are considered minimum and must be met. Hydraulic valve must be compatible with Dickey-john Control Point and Flex 4 Ground Speed Controls. [*Side delivery augers on Combination Bodies will require reversing operation along with the main delivery conveyor, front to rear. Pump capacity may have to be increased and valves and controls may have to be added to compensate for additional functions.*]

Note: MDOT will be installing these hydraulic systems on:

ITEM 15.1 - (System One) – Single or tandem axle trucks with 11 or 14 foot combination bodies, front cross auger with left spinner and rear spinner or rear cross augers, with regular or zero velocity spinners. **Tandem valve bodies shall include a section for side mounted wing.**

ITEM 15.2 - (System Two) – Single or tandem axle trucks with dump body, slide-in material spreader, cross auger, regular or zero velocity spinner or rear y-chute with spinner. **Tandem valve bodies shall include a section for side mounted wing.**

All valves shall have an EPC section to control a wing.

- Parts and material are to be current production components of the make and part number specified herein, substitutions, if any, will require review and approval prior to the bid and must be equivalent to or exceed the material and performance characteristics, and product quality of the specified component
- Pump shall be driven from the front of the engine crankshaft via a Spicer 1310 series drive-line assembly, or equal, with a splined slip yoke and fixed end yokes assembled per MDOT specifications
- Two (2) setscrews will be drilled for, and secured by, a safety wire and all cross and bearing assemblies will have grease fittings that are readily accessible.
- The splined slip joint shall have a readily accessible grease fitting also
- Furnish a variable volume, pressure, and flow compensated, load sensing axial piston pump

The pump shall offer the following features as standard:

a. Internal bleed down compensator
Bleed down compensator will soon be changed to bleed off in the valve
b. Bolt on compensator with separate adjustments for stand by and main pressure
c. SAE C mounting flange
d. SAE code 62 flanged pressure port
e. SAE code 61 flanged suction port size 2-½ inch
f. 1-½ inch SAE keyed input shaft
g. One piece input shaft for long service life
h. Preferred model **Rexroth** model **A10V100** or approved equal

- The pump shall be of cast iron construction, **6.0cir** displacement for all truck systems

- The hydraulic control valve shall be a closed center sectional type valve, load sense, individually pressure and flow compensated, rated at minimum 40gpm
- The valve shall be assembled with a mid-inlet to allow a maximum flow into P (pressure port) of 52gpm
- The P port must be SAE 16, tank (T) SAE 20 X, Y, L, M ports SAE 6
- The valve shall feature individual sections for all functions. The A & B work-ports shall be SAE 12
- The valve shall include a cartridge type shuttle network with access opposite the working ports for serviceability
- All valve functions shall be pilot solenoid operated
- All valve functions shall include individual load sense pressure adjustment for each work port
- Valve section flow to be determined by spool selection, for proper proportional joystick operation at maximum band width the spool stroke will not be limited in travel to obtain flow requirements except in the down travel position under induced load conditions
- Spool flows shall be easily field adjustable within a range by the addition or subtraction of shims or adjusting nuts, adjustment shall not reduce main spool travel
- For serviceability when enclosure mounted the solenoid coils and the individual work port load sense pressure controls shall be adjustable and accessible on the same side of the valve
- Push pin manual overrides on the proportional coils shall be covered to exclude corrosion
- Coils will be one piece assemblies with covered manual overrides
- All valve functions shall include stroke limiter
- All valve functions shall have adjustable flow compensators, either shim or screw adjustment is acceptable
- The hydraulic pilot supply will be internal to the valve
- **All units shall include a pre-wet and a wing valve**
- Rexroth model M4-12 series 2 or equal
- All sections are to be fully proportional electric

- **Left End Cover: Blank**
- **Section 1:** Front plow swing, 4 way, 15gpm, SAE 12 A&B work-ports, adjustable load sense pressure control
- **Section 2:** Front plow lift, 4 way, SAE 12 A&B work-ports 15gpm, adjustable load sense pressure control
- **Section 3:** Underbody swing, 4 way, SAE 12 A&B work-ports 15gpm, adjustable load sense pressure control
- **Section 4:** Underbody blade up/down, 4 way, 15gpm, SAE 12 A&B work-ports adjustable pressure control, 800psi load sense relief down and 1,400psi load sense relief up
- **Section 5:** Hoist, 4 way Low boy, 24g.p.m., SAE 12 A&B work-ports, with 500psi load sense relief for down pressure
- **Mid Inlet:** Must have adjustable anti-cavitation relief valve
- **Section 6:** Wing raise and lower (extend/retract shall be incorporated with the single valve), 4 way, 15gpm, motor spooled, SAE 12 A&B work-ports adjustable load sense pressure control
- **Note: Special for Side mounted wing included on all valve assemblies**
- **Section 7:**

a) Main conveyor, 2 way, 15gpm, motor spooled, Adjustable load sense pressure control for slide-in hoppers SAE 12 A&B work-ports

b) Main conveyor 4 way, 30gpm, motor spooled, adjustable load sense pressure control section for combination body with front cross auger and front & rear spinners SAE 12 A&B work-ports

c) Main conveyor 2 way, 30gpm, motor spooled section, SAE 12 A&B work-ports adjustable load sense pressure control for combination body with rear cross auger

- **Section 8:** Spinner (rear), 2 way, 7gpm, motor spooled, adjustable load sense pressure control for slide-in hoppers SAE 12 A&B work-ports
- **Section 9:** Cross auger, 4 way, 15gpm, motor spooled, SAE 12 A&B work-ports adjustable load sense pressure control to control either front or rear cross auger
- **Section 10:** Pre-wet, 4 way, 8gpm, motor spooled, SAE 12 A&B work-ports, adjustable load sense pressure control
- **Right end cover:** Outlet cover shall include power beyond with load sense carryover for plumbing of a zero velocity spinner attachment; port sizes (P) SAE 12, (T) SAE 16 (LS) SAE 6

- Section valves must be identifiable by a model number stamped in the bottom of the valve section and easily readable after assembly, for simplifying the circuit hook-up
- Remote Valve Controls are PWM type controls and will be furnished by the Ground Speed Oriented Salt Distribution vendor
- Low Oil Alert: A low oil level sensor (**Sensor furnished by hydraulic tank vendor**) of the solid state, non-mechanical, non-float type, to be connected to a normally open, energize to close, solenoid operated control valve of the cartridge and manifold design to be directly bolted to the pump pressure port. Actuation shall be by the closing of a ground connection through the low oil level sensor, to automatically shut off pump pressure port flow to all downstream functions in the event of low hydraulic oil level, and also connected to a light on the Dickey-john console to alert the driver of the low oil condition
- Training: Vendor to provide eight (8) hours training at various MDOT facilities throughout the state including the Upper Peninsula
- Training to include: operation, calibration, maintenance, troubleshooting, and repair
- Michigan based, factory trained personnel to provide training and calibration assistance

- Factory should have a warranty service center within one day ground UPS
- Systems shall be shipped accessible by fork lift, on pallets
- Billing shall be per unit/truck and as delivered
- One (1) set, operator, maintenance, and parts manuals per system
- Warranty shall be minimum One (1) year parts and labor
- Drive line shall be engine driven Spicer, splined slip joint and be shipped assembled per MDOT specifications
- Hydraulic pump shall be variable volume, pressure and flow compensated, 100cc displacement, load sensing, **Rexroth A10V100**
-

Hydraulic pump shall be:

a. Cast iron construction
b. 1-½ inch keyed one piece input shaft
c. SAE "C" mount
d. 2-½ inch flanged suction port
e. 1-¼ inch flanged pressure port
f. Provide a pressure test port

Control valves shall be:

a. Closed center sectional type
b. Load sense pressure compensated
c. Inlet maximum flow 52gpm, work port 34gpm
d. Rexroth M4-12 left hand assembly

- Model ID numbers shall be stamped on valves, visible when assembled
- Low oil shut down valve shall be normally open, energize to close, solenoid operated control valve, cartridge and manifold design, to be bolted directly to pump pressure port
- Valves shall be assembled in the proper configuration and tagged and packaged per the configuration
- EPC valves shall be compatible with Dickey-john Control Point or Flex 4 ground speed controls
- Preconstruction meeting shall be required.

15. A. TECHNICAL ASSISTANCE

The Contractor shall provide technical assistance and expertise on the installation of all hydraulic components listed in this Specification. This shall be provided at the buildup location, MDOT A&E Garage in Lansing, MI. In addition, technical support and trouble shooting for all components furnished shall be provided to all MDOT garages statewide during the warranty period.

The estimated hours required, not including travel time, for this shall be a minimum of 80 hours. This support may be scheduled such as three hours per week over a period of months during the truck build up or may be on call as needed. The Contractor's technical support persons are:

Name	**Dan Bouwman**	**Bob Slocum**	**Jeff Strong**
Office phone number	**888-200-8146**	**888-200-8146**	**419-425-8928**
Office Fax	**616-698-0972**	**616-698-0972**	**419-425-8931**
Cell phone number	**616-889-7495**	**269-838-6199**	
Office Address	**6726 Hanna Lake RD SE, Dutton MI 49316**		

STATE OF MICHIGAN

Contract No. **071B550010**

Optional use, multi-year contract for winter maintenance truck build-up components

EXHIBIT B
PRICING

1. The Contract Activities pricing schedule for Truck & Trailer Specialties is listed below.
2. Prices include all costs, including but not limited to, any one-time or set-up charges, fees, and potential costs that Contractor may charge the State (e.g., shipping and handling, per piece pricing, and palletizing).
3. The Contractor does not offer quick payment terms.
4. The Contractor will be required to furnish all Contract Activities that may be ordered during the Contract period.
5. The Contractor certifies that the prices were arrived at independently, and without consultation, communication, or agreement with any other Contractor.

Winter Maintenance Truck Build-up Components			
Item No.	Unit	Description	Unit Price
1	EA.	Pre-wet Systems per specification # 04-PREWET.C14	$3,217.00
2	EA.	Fuel tank and hydraulic reservoirs per specification # HYDTANK.C14	$3,710.00
3	EA.	Ground speed oriented spreader control systems with electric over hydraulic joystick controls per specification # GRDSPD.C14	$4,364.00
4	EA.	Automatic electric tarp assemblies per specification # 04-TARPS.C14	$1,322.00
5	EA.	11 foot stainless steel dump bodies and hoists per specification # 04-11SSDMP.C14	$15,010.00
6	EA.	14 foot stainless steel dump bodies and hoists per specification # 04-14SSDMP.C14	$19,256.00
7.1	EA.	11 foot combination 45° slope side dump and spreader bodies with options, per specification # CMBBDY.C14	$29,216.00
7.2	EA.	14 foot combination 45° slope side dump and spreader bodies with options, per specification # CMBBDY.C14	$32,441.00
7.3	EA.	Option 1 - Reversing rear cross auger with side spinner	$4,023.00
7.4	EA.	Option 2 - Reversing rear cross auger with center spinner	$4,605.00
7.5	EA.	Option 3 - Rear tip up spinner with winch	$2,004.00
7.6	EA.	Option 4 - Zero velocity spreader	$5,680.00
7.7	EA	Option 5 - Salt slurry generator	$7,826.00
7.8	EA.	Option 6 - Belt over main conveyor chain	$2,414.00
8	EA.	Underbody scraper, folding mold board style, per specification # 55-FMBBLD.C14	$8,620.00
9	EA.	Underbody scraper, Mop style, per specification #55-MOPBLD.C14	$8,390.00
10	EA.	Patrol wing plow, behind scraper mount, right or left, per specification # 57-0901SMW.C14	$7,269.00
11	EA.	Junior wing plow, behind scraper mount, right or left, per specification # 57-0901SMWJR.C14	$6,818.00
12	EA.	11 foot stainless steel hopper box material spreaders with options per specification # 60-11SS.C14	$10,280.00
12.1	EA.	Option 1 - Reversing rear cross auger with side spinner	$4,339.00
12.2	EA.	Option 2 - Zero velocity spreader	$5,680.00
12.3		Option 3 - "Y" chute distributor	$2,395.00
13	EA.	14 foot stainless steel hopper box material spreaders with options per specification # 60-14SS.C14	$12,598.00
13.1	EA.	Option 1 - Reversing rear cross auger with side spinner	$4,339.00
13.2	EA.	Option 2 - Zero velocity spreader	$5,680.00
13.3	EA.	Option 3 - "Y" chute distributor	$2,395.00
14	EA.	Quick hitch, Husting type for front snow plow, truck mounted, 34 inch per specification#04-PLOWJACK. C14	$1,082.00
15.1	EA.	Hydraulic system, closed center, piston pump, ground speed controlled, system 1, per specification # HYD-PP.C14	$9,398.00
15.2	EA.	Hydraulic system, closed center, piston pump, ground speed controlled, system 2, per specification # HYD-PP.C14	$9,320.00

EXHIBIT C - MDOT DRAWINGS

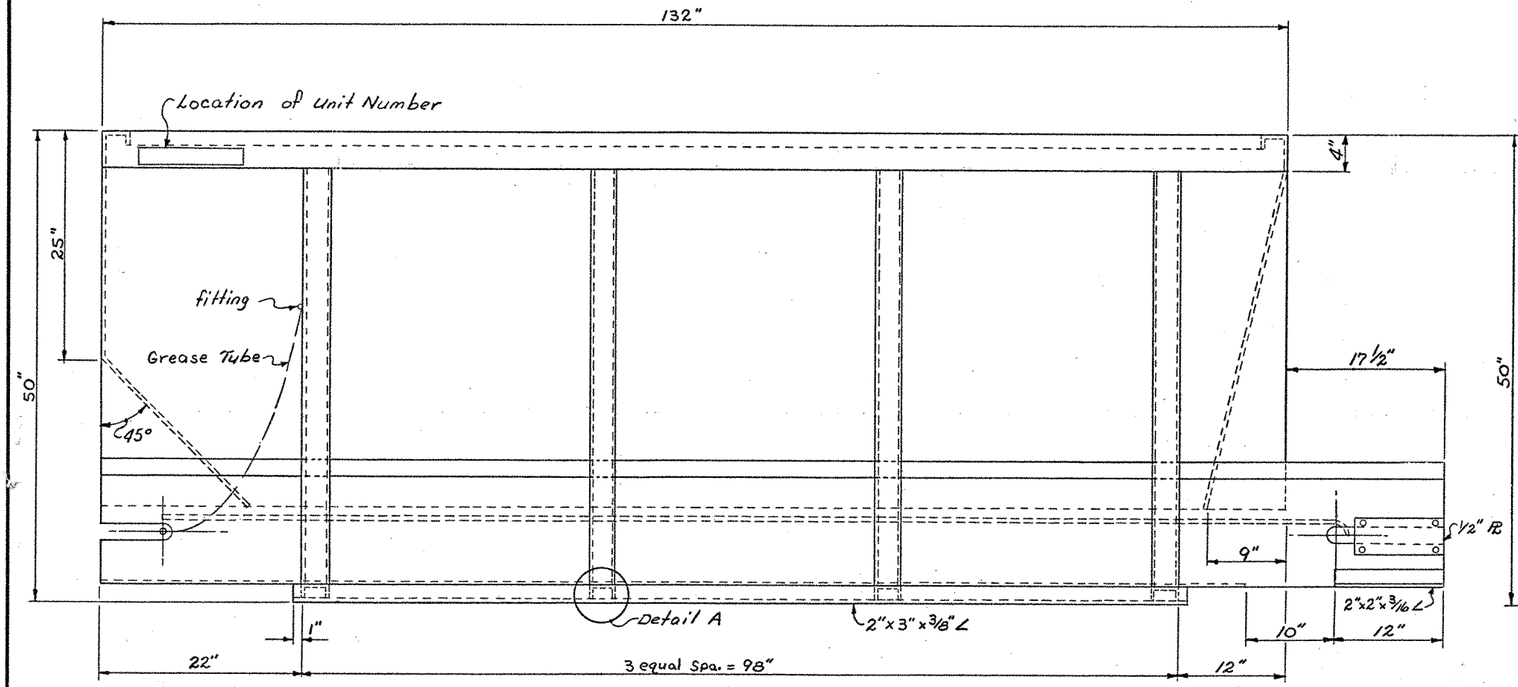

11' Box

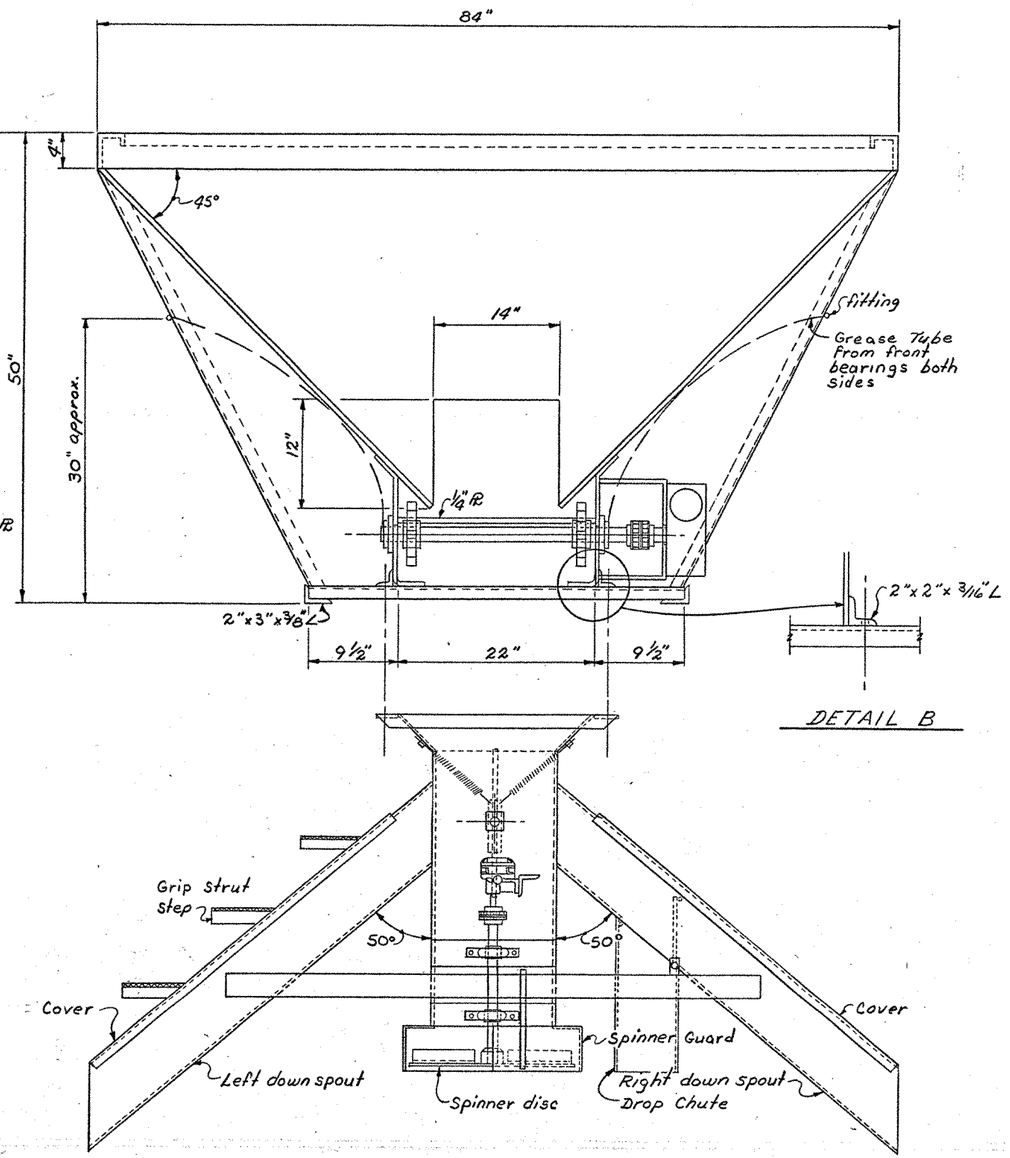

DETAIL B

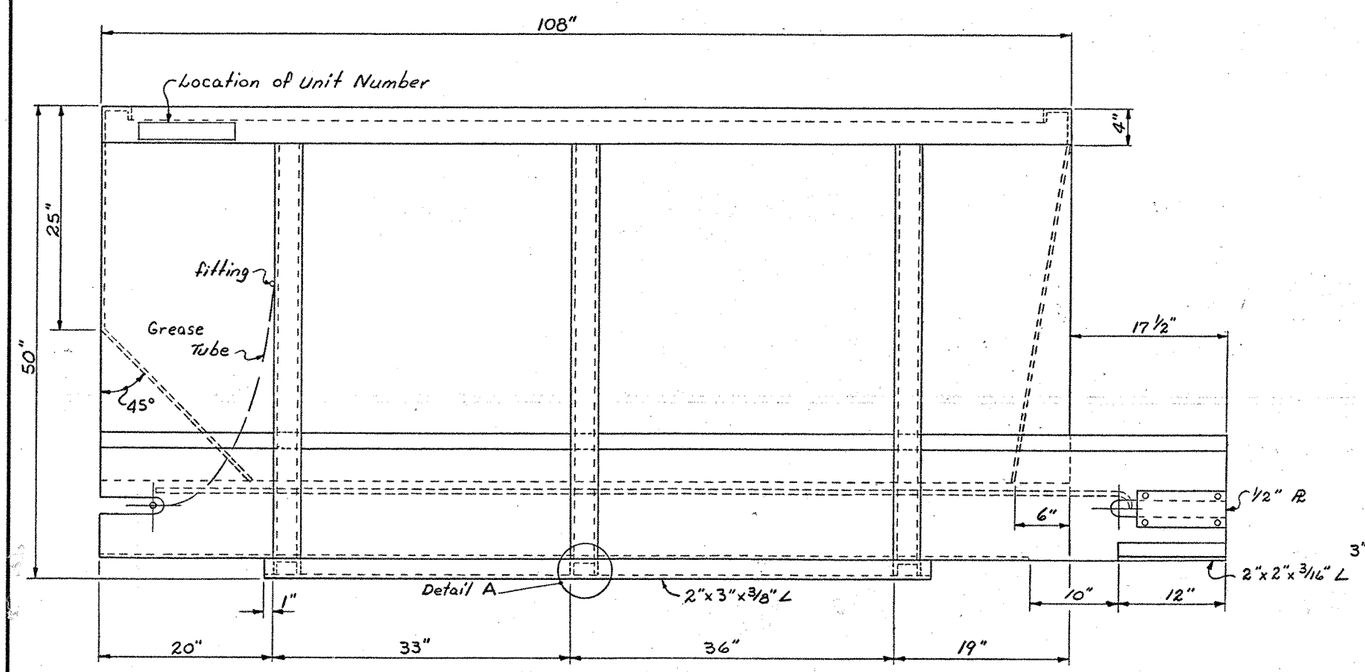

9' Box

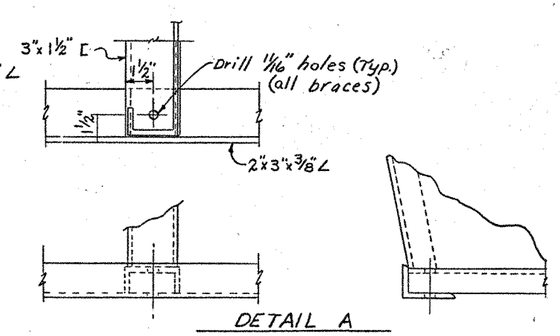

DETAIL A

NOTE: All Material Shall be 10 gauge Except as noted.

All welded areas are to be continuous with no breaks.

For Cover hinge and drop chute details See No. 67. 790-3 and 4

MICHIGAN DEPARTMENT OF STATE HIGHWAYS AND TRANSPORTATION

MATERIAL SPREADER ASSEMBLY 11' AND 9'

REVISIONS

NO.	DESCRIPTION	DATE	BY
1	New Design	7-81	R.G.P.
2	Unit No. Location	6-87	R.G.P.

SQUAD BOSS		
DRAWN BY	R.G.P.	7-79
TRACED BY		
CHECKED BY		
SHEET	OF	

63-790-1

PRM PD3 1M 12-76 63702-

EXHIBIT C - MDOT DRAWINGS

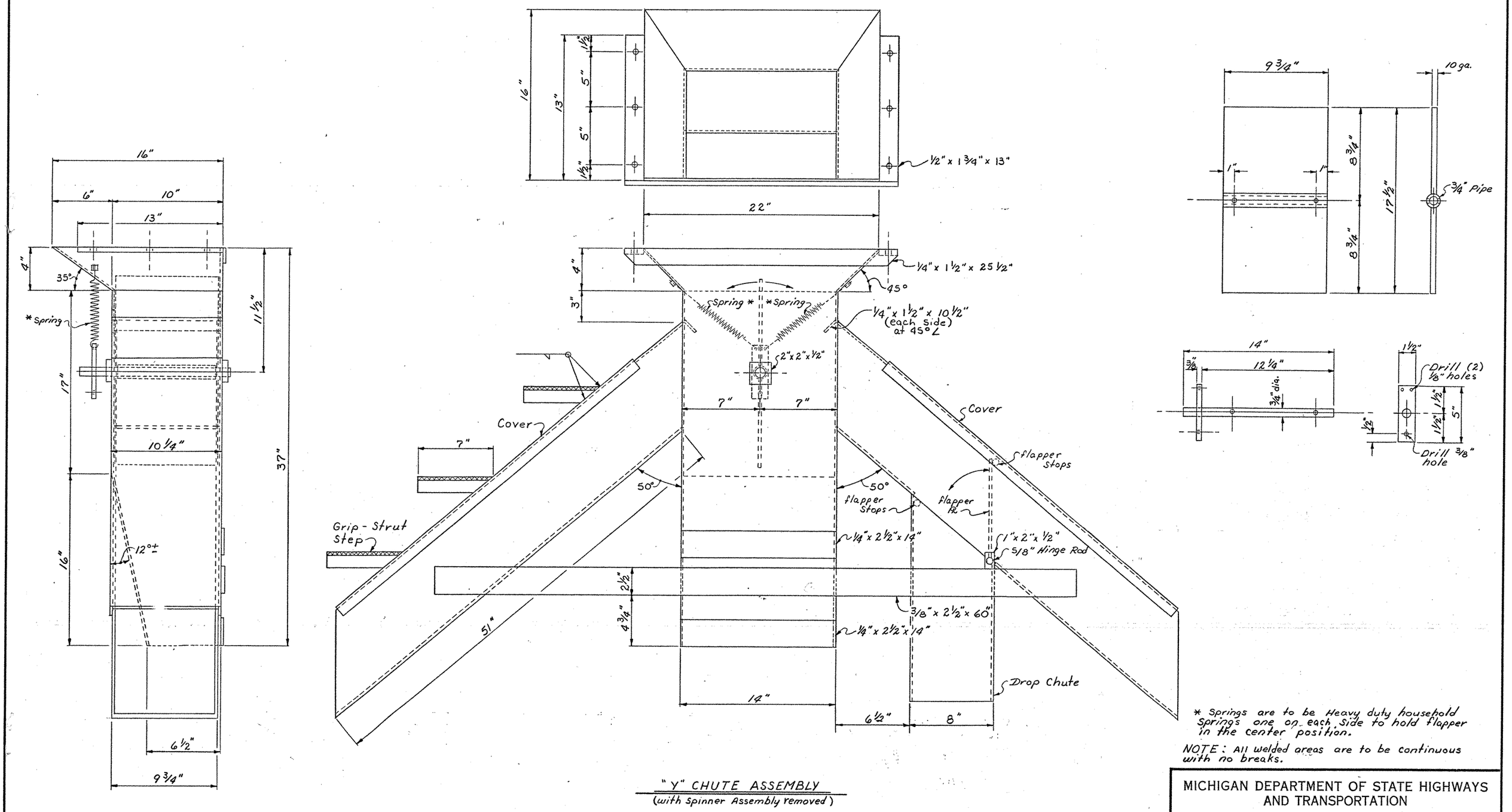

"Y" CHUTE ASSEMBLY
(with Spinner Assembly removed)

* Springs are to be Heavy duty household springs one on each side to hold flapper in the center position.

NOTE: All welded areas are to be continuous with no breaks.

MICHIGAN DEPARTMENT OF STATE HIGHWAYS AND TRANSPORTATION

"Y" CHUTE ASSEMBLY FOR MATERIAL SPREADER

REVISIONS

NO.	DESCRIPTION	DATE	BY
1	New Design	7-81	R.G.P.
2	Unit No. Location	6-87	R.G.P.

SQUAD BOSS		
DRAWN BY	R.G.P.	7-79
TRACED BY		
CHECKED BY		
SHEET	OF	
63-790-2		

PRM PD3 1M 12 76 63702

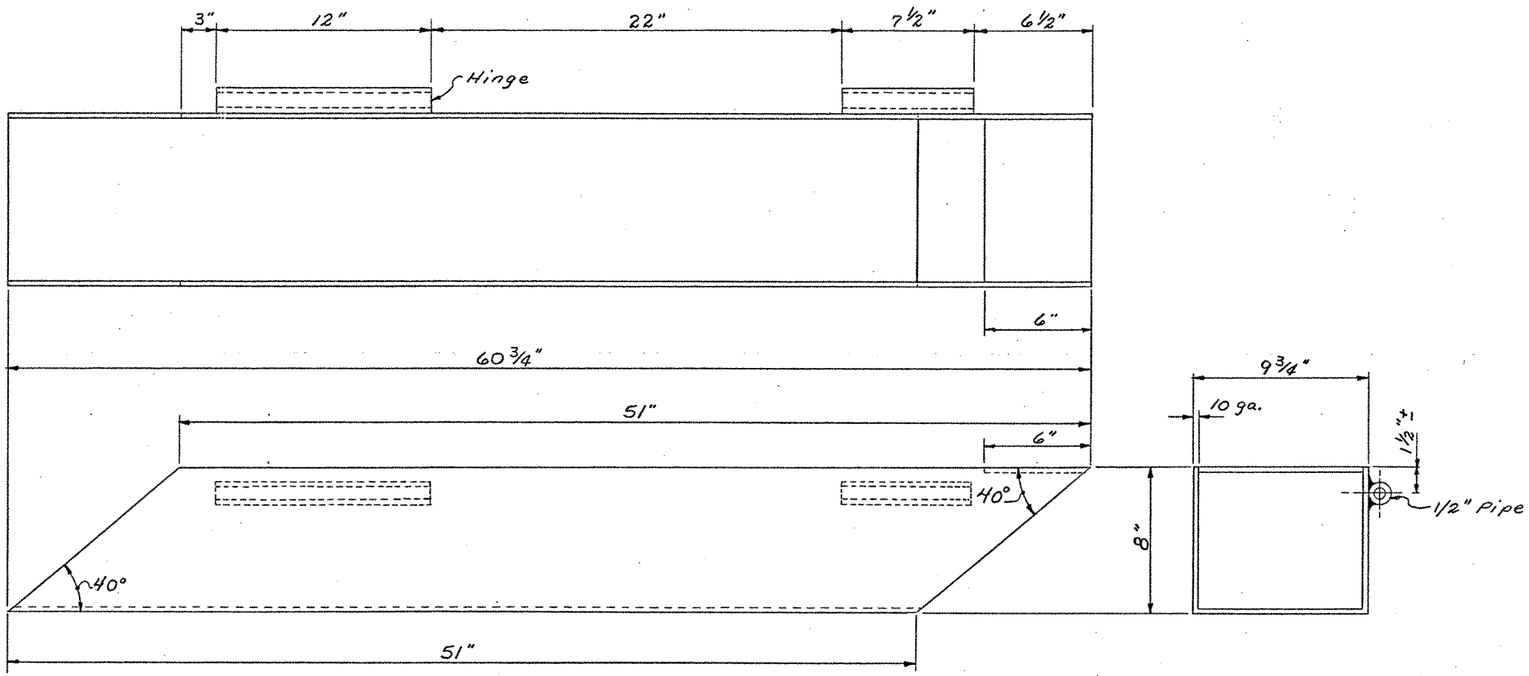

DOWN SPOUT
(Left Side)

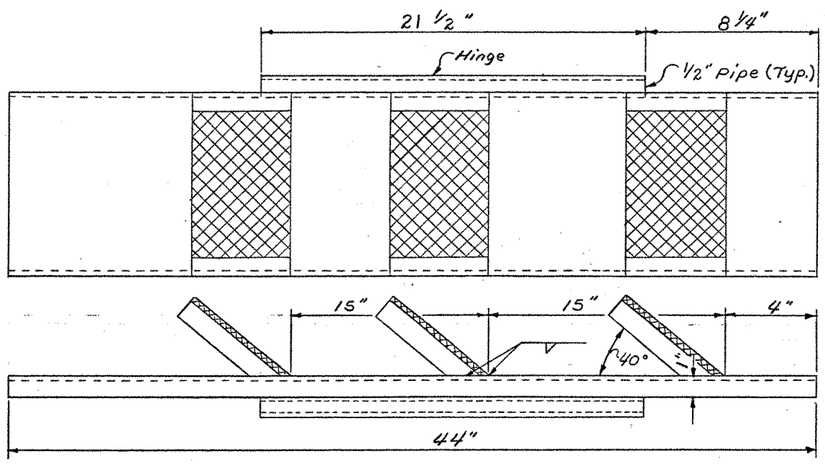

DOWN SPOUT COVER
(10 ga. 1 Req'd.)
(Left Side)

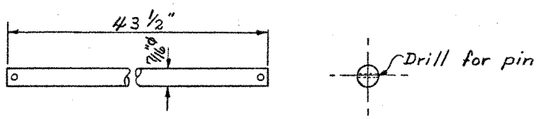

HINGE PIN
(2 Req'd.)

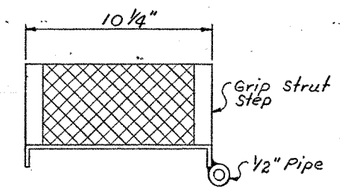

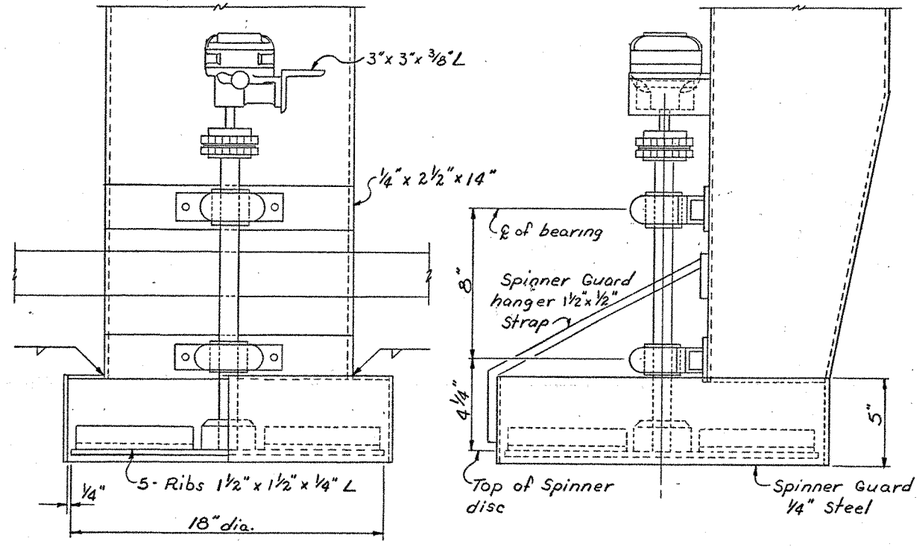

NOTE: All welded areas are to be continuous with no breaks.

MICHIGAN DEPARTMENT OF STATE HIGHWAYS AND TRANSPORTATION

"Y" CHUTE SPINNER ASSEMBLY

REVISIONS

NO.	DESCRIPTION	DATE	BY
1	New Design	7-81	R.G.P.
2	Unit No. Location	6-87	R.G.P.

SQUAD BOSS		
DRAWN BY	R.G.P.	7-79
TRACED BY		
CHECKED BY		
SHEET	OF	

63-790-3

EXHIBIT C - MDOT DRAWINGS

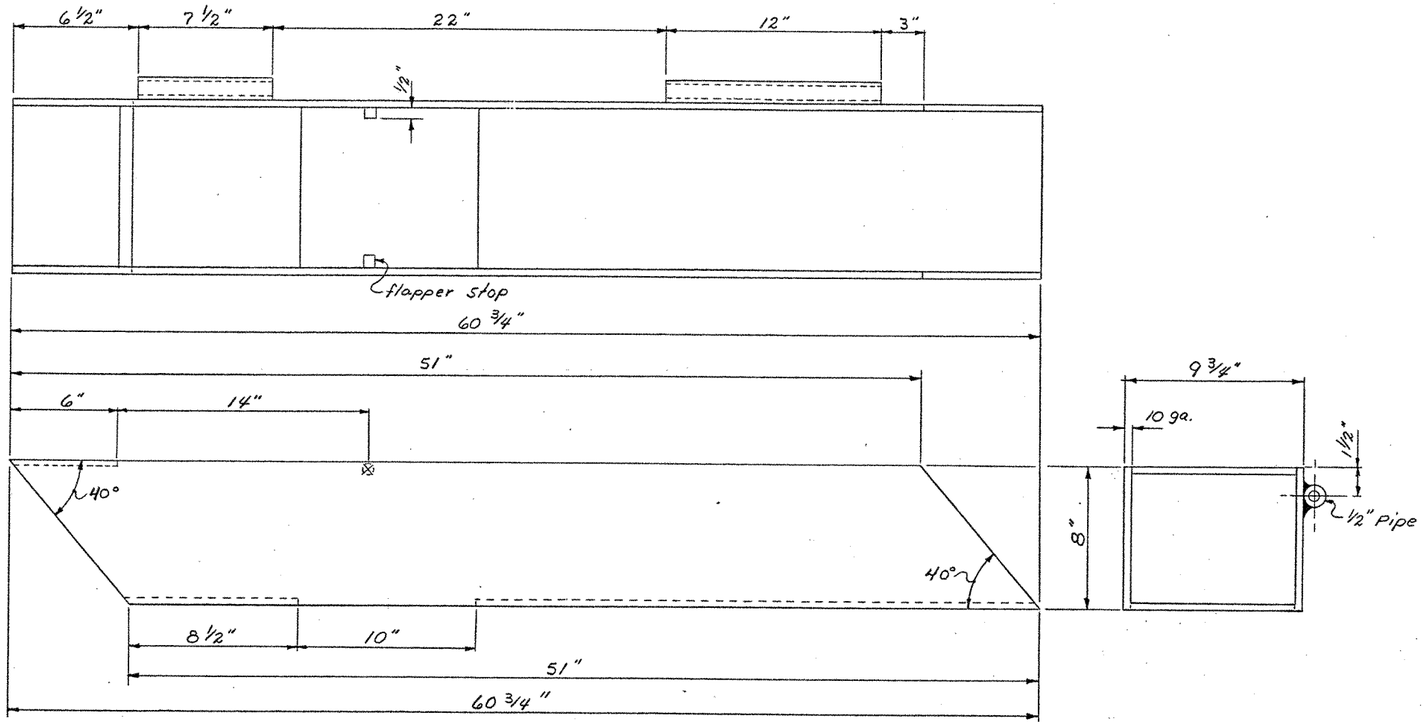

DOWN SPOUT
(Right side)

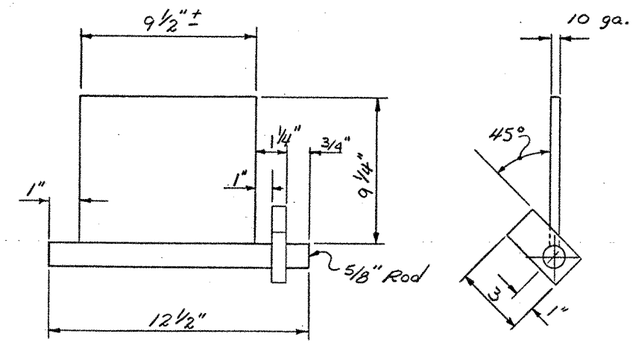

DROP CHUTE FLAPPER PL

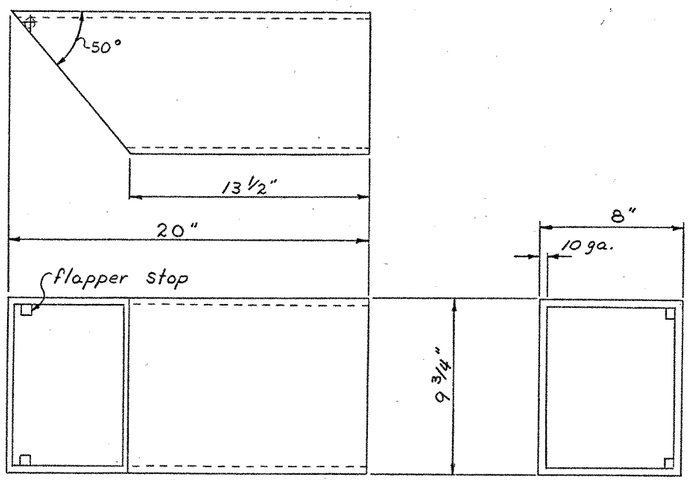

DROP CHUTE

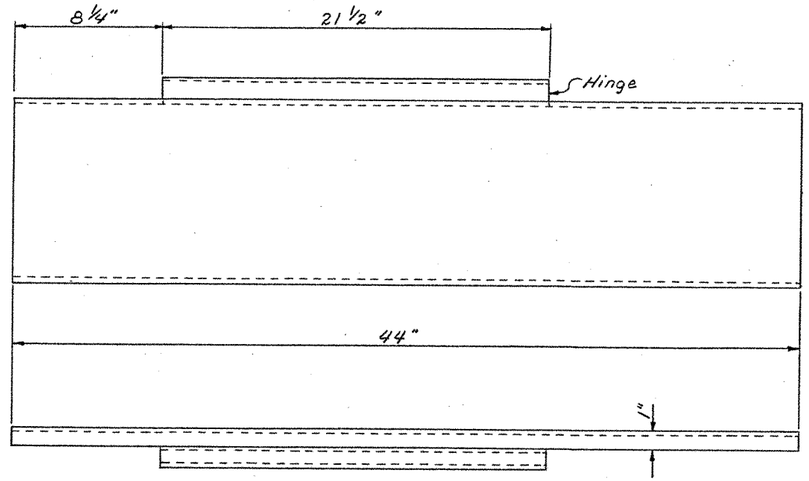

DOWN SPOUT COVER
(10 ga. 1 Req'd.)
(Right Side)

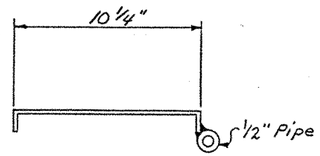

MICHIGAN DEPARTMENT OF TRANSPORTATION

DOWN SPOUT FOR "Y" CHUTE ASSEMBLY

REVISIONS

NO.	DESCRIPTION	DATE	BY
2	Unit No. Location	6-87	R.G.P.

SQUAD BOSS		
DRAWN BY	R.G.P.	7-81
TRACED BY		
CHECKED BY		

SHEET OF

63.790-4