Environmental Health Perspectives
Vo. 91, pp 33-37, 1991

Toxicokinetics of Bone Lead

by Michael B. Rabinowitz*

This article discusses bone as a source of lead to the rest of the body and as a record of past lead exposure. Bone lead levels generally increase with age at rates dependent on the skeletal site and lead exposure. After occupational exposure, the slow decline in blood lead, a 5- to 19-year half-life, reflects the long skeletal half-life. Repeated measurements of bone lead demonstrate the slow elimination of lead from bone. Stable isotope ratios have revealed many details of skeletal uptake and subsequent release. The bulk turnover rates for compact bone are about 2% per year and 8% for spine. Turnover activity varies with age and health. Even though lead approximates calcium, radium, strontium, barium, fluorine, and other bone seekers, the rates for each are different. A simple, two-pool (bone and blood) kinetic model is presented with proposed numerical values for the changes in blood lead levels that occur with changes in turnover rates.

Two approaches are offered to further quantify lead turnover. One involves a study of subjects with known past exposure. Changes in the ratio of blood lead to bone lead with time would reflect the course of bone lead availability. Also, stable isotopes and subjects who move from one geographical area to another offer opportunities. Sequential isotope measurements would indicate how much of the lead in blood is from current exposure or bone stores, distinct from changes in absorption or excretion.

Introduction

Toxicokinetics can be defined as the measuring and modeling of the movement of toxic substances, such as lead, within the body. Toxicokinetics should be distinguished from analytical chemistry, which addresses questions of how much lead is in a sample, such as bone. Toxicokinetics would try to provide answers to such questions as how long the lead has been in the bone, where the lead came from, and when and to where might it be going. The effects of lead are not addressed.

In this discussion of the movement of lead through the body and its chemical dynamics, I shall focus on bone and ask the following questions: *a)* What are some general characteristics of lead in bone? *b)* To what extent can the bone act as a source of lead to the rest of the body? *c)* How can bone lead levels be used to monitor past exposure? *d)* What are some immediate research needs or opportunities related to the kinetics of bone lead? The following is a simplified account of lead kinetics and some rough numerical estimates of the relationships between bone lead and blood lead levels.

What Are Some General Characteristics of Lead in Bone?

From the available surveys of autopsy and biopsy material some general trends are apparent (*1*). Bone lead levels increase with age at rates dependent on the skeletal site and lead exposure (*2*). Bilateral symmetry is present. Another set of studies has involved measuring the stable isotope abundance ratios with a mass spectrometer in biopsied bone and comparing it to blood lead isotope ratios. Some studies have made use of geographical variations in lead ores to examine the uptake and release of lead by the skeleton (*3*). Manton lived in South Africa, and his skeletal lead acquired the isotopic composition of that environment (*3*). After moving to Texas and being exposed to a new isotopic ratio, his blood did not immediately come to resemble his new exposure. Similar patterns were reported for his family members, including increased mobilization of skeletal lead during pregnancy. By following three adults over 9 years, including a bone biopsy, it was possible for Manton to describe the general long-term dynamics of lead in the body (*3*).

Other stable isotope studies have involved feeding five adult volunteers enriched, stable isotope tracer. This was done in a special metabolic balance ward by placing the men on constant low-lead diets, which were supplemented with enough lead to achieve their prestudy intake (*4*). After discontinuing the tracer intake, bone biopsies and long-term follow-up of blood lead levels revealed the skeletal uptake and subsequent release of the tracer.

Months after a lead-exposed person discontinues excessive intake and their blood lead has had an opportunity to decline, the subsequent decrease is very slow. Amont 65 workers, the half-lives of lead in bone ranged from 5 to 19 years (*5*). The blood lead levels stay ele-

*Neuroepidemiology Research Unit, Children's Hospital, Boston Marine Biological Laboratory, Woods Hole, MA 02543.

vated in response to lead leaving the skeleton. By examining the rates of decline in the lead levels, the supporting lead pool may be estimated. This was also demonstrated by the correlation of blood lead and bone lead among 27 active and 9 retired lead workers. Among the active workers, the nonparameteric r was 0.44, but among the retired workers, whose blood lead is supplied predominantly by their bone, the bone lead-blood lead correlation was 0.93 (*6*). Also, repeated measurements of finger bone lead in 14 retired workers showed a very slow elimination, with about a 7-year half-life (*7*).

Experiments with short-lived radioactive lead have demonstrated the affinity of bone for lead. For example, 3 weeks after lead dosage, 20% of the lead was in the urine, and 20% was bound to the skeleton (*8*). Bone uptake of radio-calcium was more rapid than lead uptake, in part because red blood cells have a stronger affinity for lead than for calcium.

A simple kinetic model of lead in the body consists of only two pools (Fig. 1). Lead in the body is either in the blood (or in equilibrium with it) or in the skeleton, where it is bound and less able to exchange. Within each pool, rapid and complete equilibrium is assumed. It is possible to obtain the sizes and exchange rates of these pools from the blood tracer data. Estimated values are shown in Table 1.

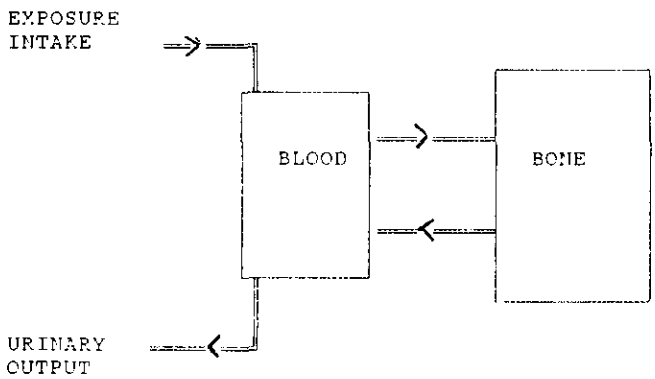

FIGURE 1. Simplified two-pool kinetic model. It is assumed that all of the lead in the body is one of two pools. The blood pool contains lead in blood and in tissues equilibrating with blood, including many potential target organs such as the brain and kidneys.

Table 1. Approximate values for the two-pool kinetic adult model.

Parameter	Blood pool	Bone pool
Mean life	1 month	10–30 years
Lead concentration	10 μg/dL 0.1 ppm	5 ppm
Pool mass	10 kg blood + marrow, liver, kidney, etc.	5 kg bone 4 cortical 1 trabecular
Lead mass	0.5–1 mg	25–750 mg

These models take the form of coupled differential equations whose solutions are the sum of two exponential terms. Other models involving additional pools have been proposed that divide the bone into labile and deep pools (*9*). Also, the soft tissue has been made a separate pool apart from blood in other models (*10*). Models with varying rates of exposure and uptake for tooth and bone lead have been proposed (*11*).

All the lead in bone is not in one well-mixed pool (*12*). For example, some bone lead, as assessed with soft L X-rays of the tibia, is available to ethylene diamine tetraacetic acid (EDTA) chelation (*13*). Similarly, comparisons of EDTA chelation and iliac biopsies show the availability of bone lead (*14*). Thus, a better approximation might involve a series of interconnected pools (Fig. 2). The inability of chelation to remove appreciable proportions of bone lead argues that some is buried and unavailable for exchange. With the passage of years and the turnover and remodeling of bone by osteon activity, buried lead may become available again.

A recent report involving laser microbeam mass analysis and electron microprobe X-ray analysis of sequential needle biopsies of a poisoned woman subject has demonstrated the localized distribution of lead in bone (*15*). The bone marrow cell nuclei showed very high concentrations. Even after chelation considerable lead remains in the organic portion.

To fully understand bone release rates of lead, some knowledge of bone turnover rates would be useful. Even though lead approximates calcium, radium, strontium, fluorine, and other bone-seeking elements, the actual numerical rates of bone release for each element are somewhat different (*16*). In the case of fluorine, which replaces the OH- of the apatite, bone stores can be rapidly exchanged. The turnover rate of the bone mineral can be a rate-limiting step for elements that are very tightly bound to apatite. This explains the inability of chelating agents to lower bone pools of bone-seeking elements and their limited ability if the chelant is administered shortly after exposure (*17*). Once the lead has penetrated the crystal surface, it becomes firmly buried and must await osteoclastic turnover, leading to the multipool bone model described earlier in Figure 2.

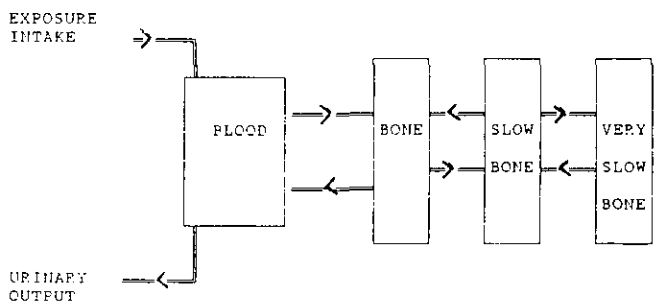

FIGURE 2. Multiple bone pool kinetic model. Not all of the lead in bone is equally exchangeable with blood. Pools may be envisioned with varying degrees of accessibility.

Mathematical attempts to describe these series of connected pools are not simple (*18*). These longer term aspects of blood lead in response to uptake and release of bone lead are well described by a power function. For example, a series of exponential terms or a Bessel function can describe the residence times of lead in bone (*19*). It is tempting to relate slow and slower bone pools, corresponding to different terms in the power function, with specific gross anatomical locations such as long bone or trabecular or ivory bone. I suspect any cubic centimeter of skeleton will contain some of each kind of bone in varying amounts. Deep and very deep bone pools may also spatially coexist more closely, separated by their locations on a mineral crystal, superficial or internal.

The actual turnover rates of compact human bone can be estimated by the osteon formation rate, which can be observed microscopically in dated bone (*20*). The osteon count is proportional to age. Another histological method involves measuring the fraction of compact bone that is lamellar or contains neither osteon nor non-Haversian vascular canals. Both approaches give turnover rates for bones of about 2% per year for the femur, tibia, and fibula. Calculated turnover rates, employing osteon counts, for specific bones have been tabulated ranging from the tibia and skull, which average less than 2%, to 8.3% for the spine. There is also variation in turnover rates by age. During the first year rates are very high, 85%, but fall near 7% in the twenties and 2% in the thirties. Rates apparently increase again to over 4% after 60 years.

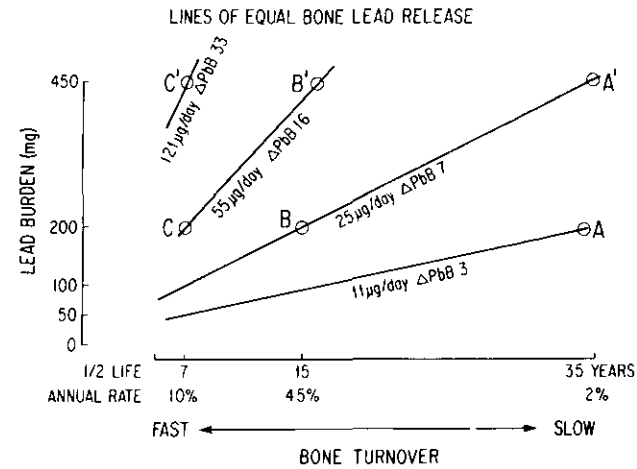

FIGURE 3. Plot of the amount of lead in the bone pool against the turnover rate of the bone pool. Each line represents points of equal lead release by bone. For example, if the bone turnover half-life is 35 years and the person has 200 mg of bone lead (point A), then each day the bone releases 11 µg of lead into the blood. The difference in blood lead levels associated with that release is about 3 µg/dL. However, for the same person with the same size bone lead pool, in the normal course of aging, bone turnover rates accelerate to a 15-year half-life, then 25 µg/day would released by the bone, thereby increasing blood lead by about 7µg/dL (point B). Point C represents a further acceleration in bone turnover in response to disease state. Points A′, B′, and C′ represent a person with a greater body store of lead and subsequently greater changes in blood lead from changes in bone turnover.

To What Extent Can the Bone Act As a Source of Lead to the Rest of the Body?

Rather than review examples of lead poisoning (*21*) and of increased blood lead levels that came from bone lead stores (*22*), I offer this somewhat hypothetical and simplistic approach to quantifying bone as a source.

Consider the simple two-pool model (Fig. 1) of blood and bone. What is the relative amount of lead in blood for a given amount of lead in bone? This depends on the turnover rates of each pool. For example, the amount of lead in the bone pool can be plotted against the turnover rate of the bone pool (Fig. 3). Each line represents points of equal lead flux out of or into the skeleton. For example, if the bone turnover half-life is 35 years and the person has 200 mg of bone lead (point A), then each day the bone releases 11 µg of lead into the blood. The difference in blood lead levels that would be associated with changes in that amount of daily lead going into the blood, 11 µg/day, is only about 3 µg/dL. However, with the same size bone lead pool, in the normal course of aging, if the bone lead turnover rate accelerated to a half-life of 15 years, then closer to 25 µg/day would be coming into the blood from the bone, thereby increasing blood lead by about 7 µg/dL (point B). Should bone turnover rates increase further, perhaps to a 7-year half-life, in response to metabolic disturbances or disease (point C), then this model would predict 55 µg/day coming from the skeleton, increasing blood lead by 16 µg/dL. Even if absorption and excretion rates for lead are constant, and only the bone lead turn-over rate increases, the blood lead levels can be expected to increase. The change in blood lead level from changes in bone turnover rates become more dramatic in cases typical of occupational exposure. If bone stores amount to 450 mg and the bone turnover rate increased from 2% to 4.5 or 10% per year, then blood leads would increase by 9 (16 − 7) or 26 (33 − 7) µg/dL (points A′, B′, and C′).

Expressed algebraically, if C is the change in daily bone lead output (in units of µg/day) from a change in bone lead turnover rates, $R1$ is the initial and $R2$ is the second rate (units of 1/day), and S is the skeletal pool lead mass (µg), then $C = S \times (R2 - R1)$. After several months, blood lead levels achieve a new and higher steady-state value with this change in bone lead output. The change in blood lead, B (µg/dL) associated with a change in bone flux C, where RB is the blood pool turnover rate (in units of 1/day), about a month, and M is the mass of the blood pool expressed as a volume, which includes the blood and other tissues which rapidly equilibrate with blood, about 10 L, then $B = C/(M \times RB)$.

Considering bone as a source implies that blood lead

might be a better marker of current bone output than a single measurement of bone itself. Bone measurements are markers of potential output. This underlines the value of repeated measures of available bone lead to ascertain transfer rates.

So far we have considered the skeletal mass to remain constant in size but to turnover and exchange lead. However, the skeletal compartments can also become larger or smaller. The calcium mineral mass may grow during development, aging or, for example, in response to ergocalciferol (*23*). Changes of 2% in skeletal density can be resolved with current techniques. More complete models of lead kinetics might include changes in pool size.

How Can Bone Lead Levels Be Used As a Monitor of Past Exposure or Current Risk?

Bone accumulates lead and provides a marker of past exposure. Although it would be useful to distinguish between two extreme types of exposure, a single high dose or a long-term, lower dose, we are not yet able to do so. With acute exposure, a high blood lead level is achieved for a short time. If one of lead's toxic effects were dose related in a threshold fashion, the lead in blood would be high enough to damage some target organ, such as the brain or kidney. In the case of chronic exposure, elevated blood lead levels might persist for years, with large amounts of lead deposited in bone. Perhaps some of lead's toxic effects are proportional to cumulative exposure. If the same total quantity of lead were taken each way, acutely or chronically, I would expect a greater bone signal from those chronically exposed, even though their blood lead might not have achieved as high a peak. So chronic or acute exposure to lead would be indistinguishable by bone assay but with markedly different physiological effects.

Lead deposited in bones can become less available with time. A sampling method that can discriminate old versus more newly deposited lead would be useful. Investigations among lead workers in Sweden have addressed this issue of multiple measures of bone lead (*24*). Schütz et al. found chelatable lead to correlate with blood lead ($n = 37$, $r = 0.93$) and with trabecular, vertebral bone lead ($n = 23$, $r = 0.81$) (*24*). However, chelatable lead correlated poorly with finger bone lead measured with K X-rays ($n = 23$, $r = -0.21$) (*24*). This confirms the existence of an inert, nonchelatable pool and a more labile pool in bone.

What Are the Most Immediate Research Needs or Opportunities Related to the Kinetics of Bone Lead?

More should be learned about the factors affecting lead turnover in bone. Lead and calcium are similar, so changes in calcium metabolism affect lead movement within the body. Blood lead level increases secondary to changes in calcium status have been seen in osteoporosis, lactation, and aging. However, lead, calcium, and other alkaline earth elements may have turnover rates in bone sufficiently different from each other, and the ratio of their rates may be sufficiently different from person to person that measurements of lead kinetics would be much more useful than measurements of calcium metabolism alone (*25*). Under certain conditions lead might be mobilized from bone to a greater extent than is calcium. In other words, we need more information about the turnover rates of lead in humans in their slower (longer than a year) body pools. How much of the bone lead mass is involved in inert, slow, or labile metabolic pools? Using various-strength X-rays and using different anatomical sites, past exposure can be reconstructed.

To what extent does lead in bone become progressively less available over the passage of years? Consider the sequence of *a*) substantial exposure resulting in the accumulation of bone stores of lead followed by *b*) years of much lower exposure with lowering of blood lead, some bone stores staying elevated, and *c*) some metabolic mobilization of bone stores. Does the amount of mobilized bone lead decrease with the amount of time available for deeper burial by bone turnover? Does the freshness of exposure affect bone availability with a progressive deeper burial? Alternatively, does the passage of time after the cessation of exposure have no effect on availability? Is the situation one of awaiting some event, such as pregnancy or parathyroid disease, that would trigger increased mobilization?

Perhaps one of the following two approaches might be useful. A registry could be created of subjects who developed lead poisoning from mobilized body stores of lead and not current exposure. Their bone lead and blood lead levels could be tabulated according to the interval since cessation of major exposure. From the changes in the ratio of blood lead to bone lead with age and with time since exposure, we could determine to what extent lead becomes progressively more deeply buried or available with time.

Another more direct method might employ stable isotope tracer methods to distinguish past versus recently absorbed lead, but it would require subjects who have moved from one area to another. Using an extreme case as an ideal example, leads from Port Pirie, Australia (206/204 = 16.1) and Barberton, South Africa (206/204 = 12.5) are very different from typical or common lead (206/204 = 18–19) or Missouri lead (206/204 = 20–22). These ratios can be measured to finer than ± 0.005 with a dedicated, solid source mass spectrometer. If a woman grew from birth to maturity at one such place, then moved and after a delay of a few years became a mother, sequential lead isotope measurements would indicate how much of the lead in her blood is from current exposure and how much is from bone stores. This would indicate the extent to which pregnancy mobilized stored lead as distinct from changes in absorption or excretion rates.

Research funding was supplied by a grant from the National Institute of Child Health and Human Development (HD-08945). Diane Hoxmeier and Alan Leviton kindly reviewed and improved this manuscript.

REFERENCES

1. Drasch, G., Böhm, J., and Baur, C. Lead in human bones. Sci. Total Environ. 64: 303–315 (1987).
2. Wittmers, L., Wallgren, J., Aufderheide, A., and Rapp, G. Lead in bone, distribution of lead in the human skeleton. Arch. Environ. Health 43: 381–391 (1988).
3. Manton, W. Total contribution of airborne lead to blood lead. Br. J. Ind. Med. 42: 168–172 (1985).
4. Rabinowitz, M., Wetherill, G., and Kopple, J. Kinetic analysis of lead metabolism in healthy humans. J. Clin. Invest. 58: 260–270 (1976).
5. Hyrhorczuk, D., Rabinowitz, M., Hessl, S., Hoffman, D., Hogan, M., Mallin, K., Finch, H., Orris, P., and Berman, E. Elimination kinetics of blood lead in workers with chronic lead intoxication. Am. J. Ind. Med. 8: 33–42 (1985).
6. Schütz, A., Skerfing, S., Mattsson, S., Christoffersson, J., and Ahlgren, L. Lead in vertebral bone biopsies from active and retired lead workers. Arch. Environ. Health 42: 340–346 (1987).
7. Christoffersson, J., Ahlgren, A., Schütz, A., Skerfing, S., and Mattsson, S. Decrease of skeletal lead levels in man after end of occupational exposure. Arch. Environ. Health 41: 312–318 (1986).
8. Heard, M., and Chamberlain, A. Uptake of lead by human skeleton and comparative metabolism of lead and alkaline earth elements. Health Phys. 47: 857–865 (1984).
9. Batschelet, E., Brand, L. and Steiner, A. On the kinetics of lead in the human body. J. Math. Biol. 8: 15–23 (1979).
10. Rabinowitz, M., Wetherill, G., and Kopple, J. Lead metabolism in the normal human: stable isotope studies. Science 182: 725–727 (1973).
11. Steenhout, A. Kinetics of lead storage in teeth and bones. Arch. Environ. Health 37: 224–231 (1982).
12. Marcus, A. The body burden of lead. Environ. Res. 19: 79–90 (1979).
13. Wielopolski, L., Ellis, K., Vasawani, A., Cohn, S., Greenberg, A., Puschett, J., Parkinson, D., Fetterolf, D., and Landrigan, P. In vivo bone lead measurements. Am. J. Ind. Med. 9: 221–226 (1986).
14. Van de Vyver, F., D'Haese, P., Visser, W., Elseviers, M., Knippenberg, L., Lamberts, L., Wedeen, R., and De Broe, M. Bone lead in dialysis patients. Kidney Int. 33: 601–607 (1988).
15. Flood, P., Schmidt, P., Wesenber, G., and Gadeholt, H. The distribution of lead in human hemopoietic tissue and spongy bone after lead poisoning and Ca-EDTA chelation therapy. Arch. Toxicol. 62: 295–300 (1988).
16. Forbes, G., Taves, D., Smith, F., and Kilpper, R. Bone mineral turnover in a patient with osteogenesis imperfecta estimated by fluoride excretion. Calcif. Tissue Res. 25: 283–287 (1968).
17. Smith, F., and Hursh, J. Bone storage and release. In: Handbook of Physiology: Reaction to Environmental Agents, Section 9 (J. Field, Ed.), American Physiological Society, Bethesda, MD, 1977, pp. 469–482.
18. Marcus, A., and Becker, A. Power laws in compartmental analysis. Math. Biosci. 35: 27–45 (1977).
19. Marcus, A. Multicompartment kinetic models for lead, bone diffusion models for long-term retention. Environ. Res. 36: 441–458 (1985).
20. International Commission on Radiation Protection. Publication No. 20: Alkaline Earth Metabolism in Adult Man. Pergammon Press, Oxford, 1972.
21. Brown, A., and Tompsett, S., Poisoning due to mobilization of lead from the skeleton by leucaemic hyperplasia of bone marrow. Br. Med. J. 11: 764–765 (1945).
22. Silbergeld, E., Schwartz, J. and Mahaffey, K. Lead and osteoporosis: mobilization of lead from bone in postmenopausal women. Environ. Res. 47: 79–94 (1988).
23. Hangartner, T., Overton, T., Harley, C., van den Berg, L., and Crocket, P. Skeletal challenge, an experimental study of pharmacologically induced changes in bone density in the distal radius using gamma-ray computed tomography. Calcif. Tissue Int. 37: 19–24 (1985).
24. Schütz, A., Skerfing, S., Christoffersson, J., and Tell, I. Chelatable lead versus lead in human trabecular and compact bone. Sci. Total Environ. 61: 201–209 (1987).
25. Wenger, P. and Soucas, K. Retention and excretion curves of persons containing Sr90 and Ra226 after a chronic contamination. Health Phys. 28: 145–152 (1975).