TRAC
Michigan Design and Build Bridge Challenge Guidelines
Grades 11 and 12 – Arch Bridge
2013-2014

The TRAnsportation and Civil Engineering (TRAC) Program

***THE PURPOSE OF TRAC*:** The TRAC program is an inventive way of introducing students to the wide variety of career opportunities available in the field of engineering. The program teaches students how to apply a variety of math and science concepts to common engineering problems occurring in transportation systems. The TRAC program is also designed to allow the students to identify and evaluate the social and environmental impacts associated with the development of new transportation systems within their communities.

PROGRAM DESIGN: *TRAC* includes electronic components to collect and analyze data, and software programs to graph results and test a series of models. The developed activities are designed to show students how to use software and hands-on tools to solve real-life problems associated with transportation.

COMPETITION FOR GRADES 11 and 12

The Competition:

The Michigan Design and Build Bridge Challenge is designed to be an extended activity created from the TRAC Bridge Builder module. This event is designed to allow students the opportunity to create a bridge report portfolio, develop and construct a bridge, test for strength-to-weight ratio, learn to use Power Draft CAD Software by Bentley Systems, Inc. and create and present a PowerPoint presentation. Student teams from grades 11and 12 will be competing against other TRAC teams from Michigan. Interested teams should fill out the attached application and submit it prior to the deadline of **November 1, 2013**. The Michigan Department of Transportation (MDOT) will send a TRAC Challenge Kit to each team. TRAC kits will be shipped by **November 15, 2013** and each kit will include the following items:

- Balsa Wood
- Wood Glue
- Power Draft CAD Software by Bentley Systems, Inc., including an instructional video on how to use the software to complete your CAD drawing. Power Draft CAD Software must be used to complete the CAD drawing
- Information packet

Other materials needed (must provide your own):
- Calculator
- General School Supplies

After completing the project, each team is required to submit one copy of their bridge report portfolio to MDOT. Do not send the bridge itself. The bridge report portfolio must be postmarked no later than **Saturday, February 22, 2014**. All entries become the property of MDOT and will not be returned. Bridge report portfolios will be judged and if determined complete, the team will be invited to compete in the Michigan Bridge Challenge in Lansing. Teams will be notified by **Friday, March 7, 2014**.

Teams submitting **complete** bridge report portfolio will be invited to compete in the 6th Annual Michigan Design and Build Bridge Challenge at the Lansing Center on **April 17, 2014**. The invitation to compete in the competition includes: mileage (0.39 cents per mile) to and from the competition, overnight accommodations (two rooms per team and advisor) the evening before the event, Bridge Challenge polo shirts (must be worn at the competition), and breakfast and lunch at the Bridge Challenge.

To compete in the Michigan Design and Build Bridge Challenge, each team must have a complete, constructed bridge and a PowerPoint presentation (7 to 10 minutes in length). Any deviations between the bridge design submitted in the bridge report portfolio and the complete, constructed bridge must be detailed in the PowerPoint presentation. If a team attends the competition and does not have both a complete constructed bridge and a PowerPoint presentation, or any member is not wearing the Bridge Challenge polo shirt (clearly visible), that team will be disqualified and will not be reimbursed for contest expenses. **The PowerPoint presentations and student waivers must be submitted to a DROP BOX on or before April 10, 2014**.

Who Can Enter:

- Only schools involved in the Michigan TRAC program can enter the competition.
- Students must be in 11th and/or 12th grades.
- Teams must be composed of three members, no less, no more. Team member changes will be allowed up until **February 22, 2014**. Team member changes after **February 22, 2014** will be considered on an individual basis. Each student can be a member of only one team.

The Problem:

The goal of this competition is to develop an Arch Bridge that will carry as much weight as possible while weighing as little as possible (strength-to-weight ratio). Each team is to design and conduct experiments to test for strength-to-weight ratio, and then design a bridge resulting from those experiments. The teams will construct a bridge made only with the materials provided in the TRAC Challenge Kit. As a part of the Design Competition, the team is required to develop a bridge report portfolio describing the design and testing of the bridge. The bridges will be weighed and strength tested during the competition to calculate strength-to-weight ratio. Each bridge will be checked for design specifications according to the rules.

The Challenge:

An engineer's job is to not only design a safe bridge to carry heavy loads, but also to make sure that it is cost effective (uses less material). To simulate this process, teams will use the following strength-to-weight ratio calculation to develop a bridge that carries a heavy load, but has a low weight. Strength-to-weight ratio is determined by dividing the maximum load carried by the weight of bridge.

Example: Maximum load = 120.0 pounds
Bridge weight = 20.0 grams
Ratio = 2724.0
[(120 pounds x 454g/pound) / 20 g]

Specifications:

The bridge must meet the specifications listed below or penalties, up to disqualification, will be applied for each requirement that is not met.

- The materials provided in the kit are the ONLY materials to be used when building the bridge structure.
- All team members must wear the provided Bridge Challenge polo shirt (clearly visible). If the provided Bridge Challenge shirts are not worn, the team will be disqualified and expenses will not be reimbursed.
- Lamination (gluing two pieces of wood along the longitudinal length to increase strength) is not permitted.

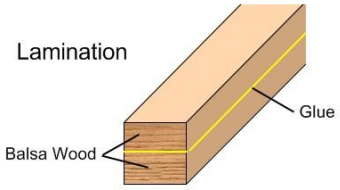

- Acceptable Connections (joints) are: butt joints, miter joints, and notched joints; however, the joints can be no thicker than one-quarter inch.
- The balsa wood used to construct each bridge must be only one layer thick. At the joints, more than one layer may be required. Joints may not exceed one-quarter inch in thickness overlap. A multi-layered joint may not exceed one-quarter inch in length.
- End to end, the **length of the entire bridge must be 16 inches**.
- A **block of wood that is 12 inches long by 2 inches wide by 1 inch high must be able to be pushed smoothly across the bridge**; a complete bridge deck is not required.
- **Tester supports** will be placed at **16 inches on center**. The bridge must be suitable for placement on Pitsco di2000 Structure Tester. The bridge can only make contact with the support surfaces as shown below with asterisks. Support dimensions are shown below. Pitsco support dimensions are 4.5 inches wide by 1.75 inches long.

- If the bridge makes contact with other parts of the tester, there will be a reduction in score for not following specifications
- The bridge deck must have a ¾ inch hole in the mid-span to allow a 5/8 inch testing rod to pass through and attach to an 8 inch long block of wood for strength testing as seen in the picture above and in the diagram.
- Bridge must meet the Arch Bridge definition: A type of bridge whose primary load carrying member is in compression. The riding surface can either sit on top of the arch, or be suspended from the arch using cables. The arch must rise at least ½" vertically for every 1" horizontally. The main arch must extend the entire distance between the Pitsco Testing pads.

Pitsco Tester Diagram

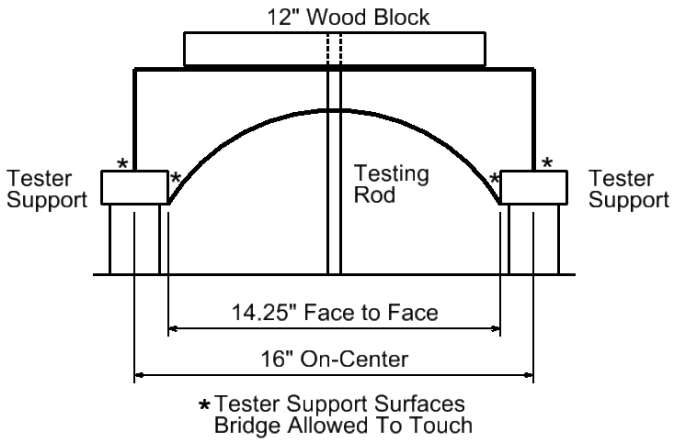

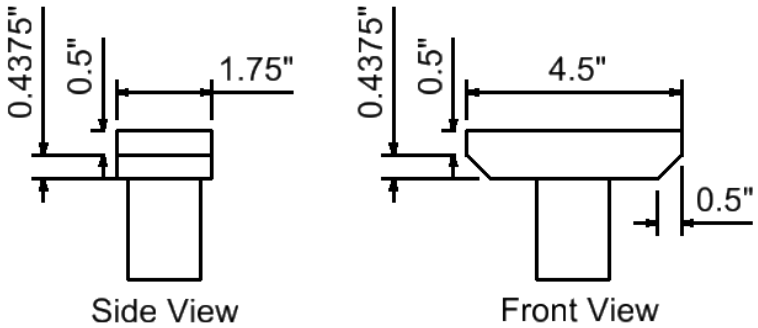

Support Detail

Not representative of required design
Use only for dimension reference

**Note: A list of frequently asked questions can be found at: www.michigan.gov/mdot-trac.*

Proposal Format:

The information below gives an indication of what the judges are looking for in each section.

I. BRIDGE REPORT PORTFOLIO
In order to be invited to participate in the bridge challenge, students need to COMPLETELY fulfill all the criteria for each section.

A. Bridge Report Portfolio Format: The written bridge report portfolio should be typed, double-spaced using a size 12 font of either Arial or Times New Roman on 8.5 x 11paper with all pages numbered, 1" borders all around. All sections should be labeled in the report.
B. Timeliness: Bridge report portfolios received after the deadline will not be accepted.
C. Bridge Report Portfolio Presentation: Bridge report portfolios must contain all the sections outlined below:

I. Title Page. Include name of challenge, team name, and logo, name of school or organization, names of students, name of teacher or advisor.

II. Table of Contents.

III. Summary (abstract). Clearly and concisely stated. (No more than two pages)

IV. Introduction. Indicate the team name, team members as well as the background of each member.

V. Body. This may be divided into several sections (such as Design, Development, etc.).
In general, this part should include:
a) Explain why you designed your bridge the way you did.
b) Explain the scientific principles behind your design.
c) Include Data Tables, Graphic Representation of Tests, and supporting Calculations page.
d) Describe the challenges you encountered in designing your bridge.
e) Include dimensioned, scaled drawings of preliminary and final bridge designs. **Bentley MicroStation PowerDraft software must be used to create the final drawings. Bentley drawings must be printed using the instructions in the training video included on the Bentley DVD in your Bridge Challenge kit. If Bentley MicroStation PowerDraft is not used for the final drawings, if print directions are not followed, or if the print is cropped or "print screen" is used, the proposal will be disqualified.**
f) Explain how you tested your design, and the improvements this led you to make.
g) Describe the challenges that you encountered in building your bridge and how you solved these problems. Include safety precautions, building methods, etc.

VI. Conclusions (and Recommendations). How successful is your project? What did you learn by taking part?

VII. Acknowledgments. Include a completed copy of the **Final Check List & Certification** (page 12 of this document). **The certification, bottom of page 12, must be signed by all student team members and adults assisting with the project.**

VIII. Bibliography. List all references used, including Internet, books and magazines.

IX. Appendices.
A. Scheduling and Accomplishments. Show on a time line, or similar method, how you scheduled your project. Include *brie*f records of meetings, telling how you managed the scheduled.
B. Journal. Progress reports of day-to-day work on the project, including date, performance and comments from each team member.

BRIDGE COMPETITION FINALS

Teams chosen to attend the 2014 Michigan Design and Build Bridge Challenge will present a PowerPoint presentation to a panel of judges comprised of high level engineers. Each team will be expected to be able to answer questions from the panel of judges about their entry. **All CAD drawings used in the PowerPoint presentation must have been created using the Bentley Power Draft CAD Software.** Judges will examine each entry to make sure it fits the specifications given in the rules. The criteria below outline the competition fundamentals:

A. BRIDGE DESIGN & CONSTRUCTION:
   - Meets competition specifications

B. ORAL PRESENTATION: *Explanation of Project.* 10 minutes maximum. A rubric on page 9 has been provided for the presentation as a guide (50% of total team score).

C. PERFORMANCE: *Achievement of performance goals and stability of construction*. Bridges will be weighed at the beginning of the competition and tested on Pitsco structural tester. Results will be used to calculate strength-to-weight ratio. (50% of total team score)

Awards:

Teams chosen to attend the Michigan Design & Build Bridge Challenge will compete for Visa Gift Cards/Awards:

- First Place Team: $300
- Second Place Team: $225
- Third Place Team: $150
- Fourth Place Team: $75

PREPARING FOR COMPETITION

Form a team of interested students or friends. Discuss the challenges and design specifications. Teams are limited to three (3) students. Each team must have at least one teacher or other adult to help and advise, though a single adult may be advisor to more than one team.

Study the rules. The challenge documents and the grading criteria will give important information, which must be followed if your team is to achieve the best results. Failure to adhere to the rules could lead to penalties up to disqualification. If any of the information is not clear, please call for additional help.

Plan the timing of the project. Ensure that everyone on the team knows the date for submission of the bridge report portfolio, and recognizes that this means that all major development work should be finished before this date.

Keep records of meetings and working drawings. Give members of the team responsibility for different sections of the final bridge report portfolio.

Notes to Adults. TRAC would like to stress that **the work on all phases of the project is to be done by the students**. Adult assistance is to be limited to:

- Mentoring
- Basic guidance of the students
- Teaching engineering, mathematical and scientific principles applicable to the project
- Guiding students in research
- Assisting in the production of the report and preparation of the drawings
- Overseeing the manufacturing stages of the project

Guidance should be in the form of asking questions, (leading questions if necessary) to promote creative thinking by the students to identify the scientific and engineering principles involved. ***Encourage students to consult library books and other resources*** to help with the project. ***Encourage students to test and improve their designs***. A good way to begin is for each student to design and/or construct a rough prototype. Test it and make improvements.

BRIDGE COMPETITION SCHEDULE

1) Applications due **November 1, 2013**.

2) Kits will be shipped to teams by **November 15, 2013**. Kits will include:

- Balsa Wood
- Wood Glue
- Power Draft CAD Software by Bentley Systems, Incorporated. All CAD drawings must use this software.
- Information packet

3) Bridge report portfolios are due and must be postmarked by **February 22, 2014** (do not include the Bridge).

4) Notification of successful team bridge report portfolios will be completed by **March 7, 2014**.

5) PowerPoint Presentations and student waivers must be submitted to the MDOT Bridge Challenge Drop box on or before **April 10, 2014**

6) Design and Build Bridge Challenge, **April 17, 2014**, at the Lansing Center in Lansing. The teams will be staying overnight at the Radisson Hotel in Lansing on **April 16, 2014**.

For any questions, please contact:

Julie VanPortfliet
Michigan TRAC Program Manager
1818 3rd Avenue North
Escanaba, MI 49829
vanportflietj@michigan.gov
906-786-1830 ext. 317

Michigan Bridge Challenge

Oral PowerPoint Presentation Scoring Rubric

CATEGORY	***25***	***20***	***15***	***5***
Content	***Covers topic in-depth with details and examples. Subject knowledge is excellent.***	***Includes essential knowledge about the topic. Subject knowledge appears to be good.***	***Includes essential information about the topic but there are one to two factual errors.***	***-***
Appearance	***Content is well organized using headings or bulleted lists to group related material. Makes excellent use of font, color, graphics, effects, etc. to enhance the presentation. No misspellings or grammatical errors.***	***Uses headings or bulleted lists to organize, but the overall organization of topics appears flawed. Uses font, color, graphics, effects, etc. to enhance the presentation. Three or fewer misspellings and/or mechanical errors.***	***No clear or logical organizational structure, just a lot of facts. Use of font, color, graphics, effects, etc. but these often distract from the presentation content. Four misspellings and/or grammatical errors.***	***-***
Oral Presentation	***Interesting, well-rehearsed with smooth delivery that holds audience attention.***	***Relatively interesting, rehearsed with a fairly smooth delivery that usually holds audience attention.***	***Delivery not smooth, but able to hold audience attention most of the time.***	***-***
Timeliness	***Seven to 10 minutes.***	***Up to one minute under/over.***	***Up to two minutes under/over.***	***Up to three minutes under/over.***

NOTE: This is a rubric to help with the preparation of the presentation. Oral presentation will count towards 50 percent of the total team score for the competition. This rubric also will be used by the judges to score the presentations. The remaining 50 percent of the team score will be determined by the outcome of the specification measurements and the strength-to-weight ratio calculations.

TRAC BRIDGE COMPETITION 2013 - 2014
Suggestions and Helpful Hints

1. Students should be prepared for questions at the end of the presentation. These questions may be concentrated in the following topics. However, note that the judges are free to ask any question about any topic.
    a) Choice of design
    b) Civil engineering careers related to bridges
    c) Safety
    d) Impacts of bridges
    e) Lessons learned

2. Stay organized and keep track of time limits.

3. Visit www.michigan.gov/mdot-trac for a list of frequently asked questions.

4. If you have a question, ASK. You can contact Julie VanPortfliet 906-786-1830 ext. 317.

5. Check out other bridges in your area or around the world.

6. RESEARCH

MDOT
Michigan Department of Transportation

TRAC PROGRAM REGION COORDINATORS

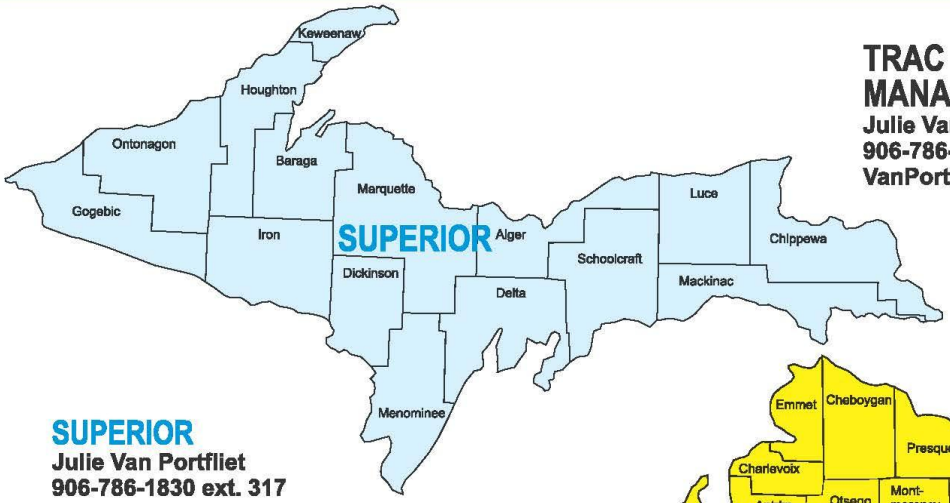

TRAC PROGRAM MANAGER
Julie VanPortfliet
906-786-1830 ext. 317
VanPortflietj@michigan.gov

SUPERIOR
Julie Van Portfliet
906-786-1830 ext. 317
vanportflietj@michigan.gov

NORTH
Tony Olson
989-732-3831 ext. 341
olsont1@michigan.gov

GRAND
Shelly Vongphasouk
616-451-3744
vongphasouks@michigan.gov

UNIVERSITY
James Jackson
517-750-0433
jacksonj15@michigan.gov

Justin Droste
517-636-0518
drostej@michigan.gov

METRO
DeAnteThompkins
248-483-5123
thompkinsd@michigan.gov

Kim Avery
313-375-2401
averyk@michigan.gov

Adam Penzenstadler
313-375-2428
PenzenstadlerA@michigan.gov

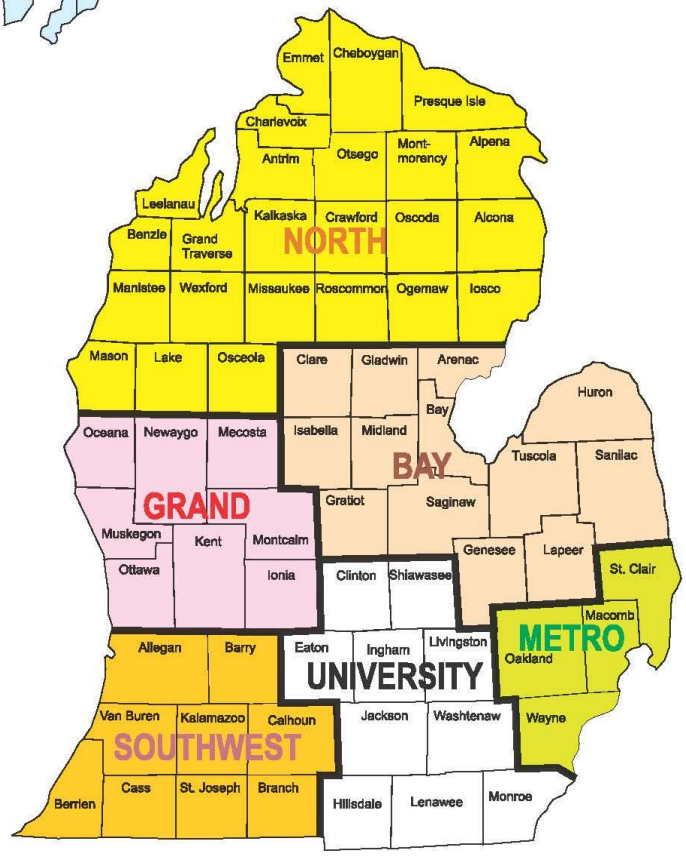

SOUTHWEST
Brenda Kragt
269-337-3913
kragtb@michigan.gov

BAY
Selena Friend
989-233-2056
friends@michigan.gov

Prepared by MDOT Graphic Design & Mapping graphics\executive\TRAC Program\Region Cooridator Map.cdr 2/13 CJ

Final Check List & Certification

- ☐ **Title Page.** Include name of challenge (Truss, Cantilever Through Truss, or Arch), team name, and logo, name of school or organization, names of students, name of teacher or advisor.
- ☐ **Table of Contents**
- ☐ **Summary (abstract).** Clearly and concisely stated.
- ☐ **Introduction.** Indicate the team name, team members as well as a short background of each member.
- ☐ **Body.** This may be divided into several sections (such as Design, Development, etc.). In general, this part should include:
  - ☐ Explain why you designed your bridge the way you did.
  - ☐ Explain the scientific principles behind your design.
  - ☐ Include Data Tables, Graphic Representation of Tests, and supporting Calculations page.
  - ☐ Describe the challenges you encountered in designing your bridge.
  - ☐ Include dimensioned, scaled Bentley MicroStation PowerDraft drawings of final bridge designs. **Drawings must be printed using the instructions in the training video incorporated on the Bentley DVD which was included in your Bridge Challenge Kit. Do not crop or print screen your drawings – failure to follow these instructions will result in the disqualification of your bridge report portfolio.**
  - ☐ Explain how you tested your design, and the improvements this led you to make.
  - ☐ Describe the challenges that you encountered in building your bridge and how you solved these problems. Include safety precautions, building methods, etc.
- ☐ **Conclusions (and Recommendations).** How successful is your project? What did you learn by taking part in this Challenge?
- ☐ **Acknowledgments and Bibliography.** List all references used, including Internet, books and magazines. List the names of the adults who assisted you in the project with a brief description of what they did.
- ☐ **Scheduling and Accomplishments.** Show on a time line, or similar method, how you scheduled your project. Include *brie*f records of meetings, telling how you managed the scheduled.
- ☐ **Daily Journal.** Progress reports of day-to-day work on the project, including date, performance, and comments.
- ☐ **Certification.** Team members and advisors must sign the certification below.

"We hereby certify that the majority of the ideas, design, and work was originated and performed by the students, with limited assistance by adults, as described above."

_____	_____	_____
Team Captain	Team Member	Team Member
_____	_____	_____
Advisor/Teacher	Provided Guidance	Provided Guidance