Transportation Final Technical Report

WOODWARD AVENUE
LIGHT RAIL TRANSIT PROJECT

Detroit, Michigan

June 2011

U.S. Department of Transportation
Federal Transit Administration

City of Detroit
Department of Transportation

WOODWARD LIGHT RAIL

Table of Contents

1.0 Introduction 1-1
2.0 Alternatives Evaluated 2-1
2.1 No Build Alternative 2-1
2.2 Preferred Alternative 2-2
2.3 Other Alternatives 2-9
3.0 Existing Transportation Conditions 3-1
3.1 Transit Service, Safety, and Security 3-1
3.2 Non-Motorized Facilities and Safety 3-6
3.3 Motor Vehicle Safety 3-12
3.4 Parking 3-24
3.5 Freight Movement 3-29
3.6 Emergency Vehicles 3-30
3.7 Traffic Operations 3-30
4.0 Future Transportation Conditions 4-1
4.1 Future (2030) Transportation Patterns 4-1
4.2 Future (2030) No Build Conditions 4-5
5.0 Roadway and Rail Guideway Design Principles 5-1
5.1 Background to Refinement of the Preferred Alternative 5-1
5.2 Principles Applied in Modifying the Preferred Alternative 5-1
6.0 Preferred Alternative 6-1
6.1 Proposed Alignment, Operating Conditions and Station Locations 6-1
6.2 Transit Service, Safety, and Security 6-16
6.3 Non-Motorized Facilities and Safety 6-17
6.4 Motor Vehicle Safety 6-23
6.5 Parking 6-24
6.6 Freight Movement 6-37
6.7 Emergency Vehicles 6-39
6.8 Traffic Operations 6-44
6.9 Construction Impacts 6-49
6.10 Other Impacts 6-50
6.11 Vehicle Storage and Maintenance Facility Sites 6-54
7.0 Other Alternatives 7-1
7.1 Alternative A1 7-1
7.2 Alternative B2 7-22
7.3 Alternative B3 7-41
8.0 Summary 8-1
8.1 Transit Service, Safety, and Security 8-1
8.2 Non-Motorized Facilities and Safety 8-3
8.3 Motor Vehicle Safety 8-4
8.4 Parking 8-5
8.5 Traffic Operations 8-6
8.6 Conclusion 8-9
9.0 List of References 9-1

List of Figures

Figure 2-1. Preferred Alternative 2-4
Figure 2-2. Cross Section of Median-Running Traffic Separated in 120-foot Right-of-Way 2-5
Figure 2-3. Cross Section of Median-RunningTraffic Separated 2-5
Figure 2-4. Cross Section at Median-Running Station 2-7
Figure 2-5. Cross Section at Curb-Running Station 2-7
Figure 2-6. Vehicle Storage and Maintenance Facility Sites 2-8
Figure 2-7. Cross-Section of Curb-Running/Mixed Traffic 2-10
Figure 3-1. Ridership by Provider 3-1
Figure 3-2. Existing Transit Services (2009) 3-5
Figure 3-3. Woodward Avenue and Vicinity Pedestrian Volumes (2010) 3-9
Figure 3-4. Woodward Avenue Transit Passenger Volumes (2010) 3-10
Figure 3-5. Fatal and A-Injury Crash Locations (2005-2008) 3-14
Figure 3-6. Volume Served/Demand Relationship 3-35
Figure 3-7. Study Intersections 3-38
Figure 4-1. Congested Roadways in 2030 4-2
Figure 4-2. Study Corridor Districts 4-3
Figure 5-1. Illustration of Sidewalk Margin 5-3
Figure 6-1. Preferred Alternative 6-2
Figure 6-2. Median-Running Exclusive Lane Cross-Section along Woodward Avenue Foxtown/Stadium Station 6-3
Figure 6-3. Curb-Running Shared-use Lane Cross-Section on Woodward Avenue between Park Avenue/Witherell Street and Campus Martius Park 6-3
Figure 6-4.Median-Running Exclusive Lane Cross-Section on Woodward Avenue between Campus Martius Park and Larned Street 6-4
Figure 6-5. Shared LRT Planview on Woodward Avenue through Campus Martius Park 6-5
Figure 6-6. Curb-running Exclusive Lane Cross-Section at Congress Street/Larned Street with a Station Location 6-6
Figure 6-7. Curb-running Exclusive Lane Cross-Section at Congress/Larned Street without a Station Location 6-6
Figure 6-8. Median-running Exclusive Lane Cross-Section 6-7
Figure 6-9. Median-running Exclusive Lane Cross-Section 6-8
Figure 6-10. Rosa Parks Station Plan View 6-12
Figure 6-11. Grand Circus Park Center Station 6-12
Figure 6-12. Preliminary Site Plan of Shoppes at Gateway Development 6-13
Figure 6-13. Profile of Woodward Avenue Under the Railroad Bridges 6-15
Figure 6-14. Shared Lane Marking 6-22
Figure 6-15. Existing Parking Structures Located Within Downtown Detroit 6-26
Figure 6-16. Parking along Woodward Avenue North of Willis Avenue 6-28
Figure 6-17. Parking along Woodward Avenue South of Grand Boulevard 6-29
Figure 6-18. Parking along Woodward Avenue Near Melbourne Street 6-31
Figure 6-19. Parking along Woodward Avenue South of Alger Street 6-32
Figure 6-21. Parking along Woodward Avenue near Highland Street 6-34

Figure 6-22. Parking along Woodward Avenue Near Pasadena Street 6-36
Figure 6-23. Location of Engine 1 6-39
Figure 6-24. Location of Engine 5 6-40
Figure 6-25. Location of Engine 17 6-41
Figure 6-26. Location of Engine 35 6-42
Figure 6-27. Location of Engine 44 6-43
Figure 6-28. Left-turns at Unsignalized Cross -Streets 6-47
Figure 6-29. Cross-Section over I-75 Fisher Freeway 6-52
Figure 6-31. Cross-Section over M-8 Davison Freeway 6-53
Figure 7-1. Foxtown/Stadium Station Cross-Section 7-1
Figure 7-2. Median Running Exclusive-Lane Cross–section on Woodward between Park Avenue/Witherell Street and Grand River Avenue 7-2
Figure 7-3. Exclusive-Lane Cross-Section on Grand River Avenue between 7-3
Figure 7-4. Cross-Section of Washington Boulevard North of Michigan Avenue 7-4
Figure 7-5. Cross-Section of Washington Boulevard South of Fort Street 7-4
Figure 7-6. Cross-Section of Washington Boulevard at Larned Street 7-5
Figure 7-7. Cross-Section of Larned/Congress Street with a Station Location 7-5
Figure 7-8. Cross-Section of Larned/Congress Street without a Station Location 7-6
Figure 7-9. Cross-Section of Randolph Street (M-3) 7-7
Figure 7-10. Median-Running Grand River Avenue Station 7-9
Figure 7-11. Existing Parking Structures Located in Downtown Detroit 7-12
Figure 7-12. Parking along Woodward Avenue North of Willis Avenue 7-14
Figure 7-13. Parking along Woodward Avenue South of Grand Boulevard 7-15
Figure 7-14. Curb-Running Shared-Use Cross-Section on Woodward Avenue between I-75 Service Drive and Park Avenue/Witherell Street 7-22
Figure 7-15. Curb-Running Shared-Use Cross-Section on Woodward Avenue between I-75 Service Drive and Park Avenue/Witherell Street with LRT Station 7-22
Figure 7-16. Shared-Use Cross-Section on State Street between 7-23
Figure 7-17. Seven-Lane Cross-Section with Parking on One Side of Street 7-25
Figure 7-18. Seven-Lane Cross-Section with Parking on One Side at LRT Station 7-26
Figure 7-19. Driveway to Ellington Building 7-38
Figure 7-20. Southbound Canfield Street Station Driveway 7-39
Figure 7-21. Southbound Ferry Avenue 7-39
Figure 7-22. Curb-Running Shared-Use Cross-Section on Woodward Avenue between Park Avenue/Witherell Street and Campus Martius Park 7-42
Figure 7-23. Curb-Running Shared-Use Cross-Section on Woodward Avenue between Grand River Avenue and Campus Martius Park with Station 7-42
Figure 7-24. Exclusive LRT Planview on Woodward Avneue through Campus Martius Park 7-43
Figure 7-25. Median-Running Exclusive Cross-Section on Woodward Avenue between Campus Martius Park and Larned Street 7-44
Figure 8-1. Comparative Reliability of the Preferred Alternative and 8-2

List of Tables

Table 2-1. Right-of-Way Width along Woodward Avenue 2-6
Table 2-2. LRT Station Locations with Alternatives A1, B2, B3 2-15
Table 3-1. Ridership on Woodward Avenue Bus Routes (2009) 3-4
Table 3-2. Existing Maximum Walking Distance to Cross at Signalized Intersections 3-8
Table 3-3. Bicycle Counts (2010) 3-11
Table 3-4. Intersection Crash Frequencies and Rates 3-15
Table 3-5. SEMCOG Regional Crash Rates and Frequencies 3-17
Table 3-6. Number and Percent of Crash Types at Critical Crash Locations 3-18
Table 3-7. SEMCOG Regional Crash Type Percentages 3-19
Table 3-8. Crash Severity at Signalized Intersections 3-20
Table 3-9. Segment Crashes by Year (2005 - 2008) 3-24
Table 3-10. Estimated Parking Spaces (2009) 3-25
Table 3-11. Estimated Daily Parking Revenue (2009) 3-26
Table 3-12. Average Parking Occupancy (2009) 3-28
Table 3-13. Parking Utilization (2009) 3-29
Table 3-14. Level-of-Service Definitions for Signalized Intersections 3-36
Table 3-15. Modeled Existing Travel Time along Woodward Avenue 3-37
Table 4-1. Origins of Work Trips in Study Corridor (2005 and 2030) 4-4
Table 4-2. Origins of Non-Work Trips in Study Corridor (2005 and 2030) 4-4
Table 4-3. Trips Beginning or Ending in Study Corridor Districts (2005 and 2030) 4-5
Table 4-4. Future No Build Modeled Travel Time along Woodward Avenue (2030) 4-8
Table 5-1. Recommended Pedestrian Sidewalk Guidelines 5-4
Table 6-1. Right-of-Way and Pavement Width along Woodward Avenue 6-8
Table 6-2. Park-and-Ride Lot Trip Generation 6-14
Table 6-3. Trip Distribution Percentages 6-14
Table 6-4. Park and Ride Trip Distribution 6-15
Table 6-5. Maximum Walking Distance 6-19
Table 6-6. Existing and Estimated Parking Spaces for the Preferred Alternative 6-24
Table 6-7. Downtown Delivery Restrictions 6-37
Table 6-8. Average Estimated Number of U-Turns used for VISSIM Analysis 6-47
Table 6-9. Non-LRT Vehicle Travel Time along Woodward Avenue 6-49
Table 7-1. Estimated Parking Spaces with Alternative A1 7-10
Table 7-2. Delivery Restrictions 7-16
Table 7-3. Non-LRT Vehicle Travel Time along Woodward Avenue with Alternative A1 7-19
Table 7-4. Estimated Parking Spaces with Alternative B2 7-31
Table 7-5. Delivery Restrictions 7-32
Table 7-6. Vehicle Travel Time along Woodward Avenue with Alternative B2 7-36
Table 7-7. Estimated Parking Spaces with Alternative B3 7-48
Table 7-8. Delivery Restrictions 7-49
Table 7-9. Vehicle Travel Time along Woodward Avenue with Alternative B3 7-51
Table 8-1. LRT Station Locations South of Piquette Street 8-1

Table 8-2. LRT Crash Comparison of Alternatives* 8-5
Table 8-3. Parking Comparison of Alternatives* 8-5
Table 8-4. Future 2030 Morning and Evening Peak-Hour Intersection Levels of Service 8-6
Table 8-5. Non-LRT Travel Time along Southbound Woodward Avenue in Morning Peak Hour 8-7
Table 8-6. Non-LRT Travel Time along Northbound Woodward Avenue in the Evening Peak Hour 8-8
Table 8-7. Comparison of Alternatives 8-9

List of Appendices

Appendix A. Existing Laneage and AM and PM Peak Hour Volumes

Appendix B. 2009 VISSIM Model Results and Model Calibration

Appendix C. 2030 No Build AM and PM Peak Hour Volumes

Appendix D: 2030 No Build AM and PM Peak Hour VISSIM Results

Appendix E: MDOT/FHWA/City of Detroit Operational and Safety Meeting Minutes and Presentations

Appendix F: LRT Median-Running Safety and Operations Issues

Appendix G: 2030 Preferred Alternative AM and PM Peak Hour Volumes

Appendix H: Overpass Bridge Information

Appendix I: LRT Median-Running Parking Impacts Along Woodward Avenue

Appendix J: LRT Median-Running Right Turning Paths -120-foot and 100-foot ROW

Appendix K: LRT Median-Running U-Turning Paths – 120-foot and 100-fot ROW

Appendix L: 2030 Preferred Alternative AM and PM Peak Hour VISSIM Results

Appendix M: 2030 Alternative A1 AM and PM Hour Volumes

Appendix N: 2030 Alternative A1 AM and PM Hour VISSIM Results

Appendix O: LRT Curb-Running Safety and Operational Issues

Appendix P: LRT Curb-Running Right-turn Analysis

Appendix Q: 2030 Alternative B2 and B3 AM and PM Hour Volumes

Appendix R: 2030 Alternative B2 and B3 AM and PM Hour VISSIM Results

1.0 Introduction

The purpose of this *Transportation Technical Report* is to supplement the Woodward Avenue Light Rail Transit (LRT) Project (the Project) Final Environmental Impact Statement (FEIS) by documenting details of the analyses of existing transportation conditions and future transportation conditions with and without the proposed LRT along Woodward Avenue. The transportation elements addressed in the analyses include safety (traffic crashes), non-motorized (pedestrian and bicycle), parking, existing and proposed transit, and traffic operations.

The study corridor is located in Wayne County, Michigan. It comprises the Woodward Avenue Corridor (the Corridor), which extends 9.3 miles from Downtown Detroit (Downtown), near the Detroit River, and north to the Michigan State Fairgrounds near 8 Mile Road (M-102). Most of the study corridor lies within the City of Detroit, while approximately two miles (from Webb Street to McNichols (6 Mile) Road) is within the City of Highland Park. From south to north, the study corridor includes the densely developed Downtown Central Business District (CBD) and many of the City's prominent historical sites, civic buildings, sports venues and cultural attractions; medical, higher education, and additional cultural institutions north of the CBD; and residential areas and the Michigan State Fairgrounds.

2.0 Alternatives Evaluated

Following the Federal Transit Administration's (FTA) guidelines for conducting an Alternatives Analysis, the Detroit Transit Options for Growth Study (DTOGS) was prepared by the Detroit Department of Transportation (DDOT) and its planning partners, including the City of Detroit, neighboring cities, the Southeast Michigan Council of Governments (SEMCOG), Wayne County, the State of Michigan, and regional and Federal agencies. DTOGS identified a wide range of potential transit improvements in a study area encompassing the City of Detroit and the cities of Dearborn, Hamtramck, and Highland Park. DTOGS used a systematic process to narrow the number of alternatives, ultimately resulting in the selection of the Locally Preferred Alternative (LPA): light rail transit (LRT) on Woodward Avenue between Downtown Detroit and the Michigan State Fairgrounds near 8 Mile Road.

This chapter describes the No Build Alternative, the Preferred Alternative (Alternative A4) and other Project alternatives (Alternatives A1, B2, B3) that were evaluated.

2.1 No Build Alternative

The No Build Alternative includes transit, roadway, and non-motorized elements.

2.1.1 Transit

The No Build Alternative includes increased service frequencies on DDOT Route 53 (Woodward Avenue) and reorganization of feeder bus routes to optimize travel times. Route 53 would continue to use 40-foot buses, as are used for current services, and would operate on 10-minute headways all day. There would also be an express route with 30-minute headways but only in the peak direction and peak period. Schedules of some cross routes would be adjusted to coincide with Route 53 service to accommodate transfers. The No Build Alternative does not include any new bus routes. In addition, the No Build Alternative assumes bus services on existing roads in mixed traffic; it does not assume any change in future (2030) bus travel speeds or travel times on Routes 53. The No Build Alternative assumes DDOT's existing fare and transfer structure.

The Ann Arbor to Detroit Commuter Rail Project, which is currently listed in SEMCOG's Transportation Improvement Program (TIP) for the Detroit-Warren-Livonia Metropolitan Statistical Area (MSA) for fiscal years 2011 through 2014, is also included in the No Build Alternative.

2.1.2 Roadway

The No Build Alternative includes all capacity-related transportation system projects listed in SEMCOG's TIP for the Detroit-Warren-Livonia MSA for fiscal years 2008 through 2011. In addition to the TIP projects, the No Build Alternative includes capacity-related transportation projects listed in SEMCOG's financially constrained Regional Transportation Plan (RTP) for the Corridor.

2.1.3 Non-Motorized

A shared-use path for pedestrians and bicycles is currently being constructed along Kirby Street on both sides of Woodward Avenue. There are also plans to construct a shared-use path along Canfield Street on both sides of Woodward Avenue within the next few years. These shared-used paths are being constructed and maintained by the University Cultural Center Association

(UCCA), a non-profit community development agency in Midtown Detroit. There are no other plans to improve or construct any other non-motorized facilities within the study area.

2.2 Preferred Alternative

The Preferred Alternative is to construct LRT on Woodward Avenue from Downtown Detroit to 8 Mile Road (Figure 2-1). The LRT would be an at-grade system entirely within existing rights-of-way. It would be fully functional as a stand-alone project, but would be designed to accommodate possible future extensions. This section describes the Preferred Alternative's alignment, stations, associated facilities and construction phasing plan and staging areas.

The Preferred Alternative would be constructed in two phases. Phase 1 would entail construction of the LRT trackage, 12 LRT stations and four traction power substations (TPSS) between Downtown Detroit north to Grand Boulevard. A temporary vehicle storage and maintenance facility (VSMF) would be constructed at the Amsterdam Avenue site to service the Phase I LRT system until Phase 2 is built. Phase 2 would entail construction of the northern segment of the Woodward Avenue LRT Project, from Grand Boulevard to the Michigan State Fairgrounds, comprising LRT trackage, seven LRT stations, four TPSS and the permanent VSMF on the Highland Park Ford Plant site. Following completion of the permanent VSMF construction, the temporary facility at Amsterdam Avenue would be demolished.

The Preferred Alternative's effects on transit, non-motorized and motorized safety; traffic operations and parking; and other transportation elements are discussed in Chapter 6.0.

2.2.1 LRT Alignment

The LRT would operate in the center median of Woodward Avenue from north of I-75 to the Michigan State Fairgrounds. Within this section, the LRT would be running separately from vehicular traffic. There may or may not be a physical barrier between the LRT and vehicular traffic. Stations with center platforms would be located in the median. There would be fourteen stations north of I-75 (Figure 2-1).

South of I-75, the LRT would operate on median-running dual tracks south on Woodward Avenue to Park Avenue/Witherell Street. It would then transition to curb-running single tracks continuing on Woodward Avenue to Campus Martius; operate counter-clockwise around Campus Martius with vehicular traffic; and then continue south on Woodward Avenue with the southbound track turning west onto the south side of Congress Street. The alignment would then turn north on Washington Boulevard with median-running dual tracks until the final stop at the Rosa Parks Transit Center at the northwest corner of Washington Boulevard and Michigan Avenue. The LRT would then reverse direction along the median-running tracks on Washington Boulevard, turning left (east) to the south side of Larned Street; turn left (north) onto northbound Woodward Avenue and counter-clockwise around Campus Martius, after which it would transition to the median-running dual tracks north of Park Avenue/Witherell Street. Five stations would be sited in the Downtown portion of the LRT alignment (Figure 2-1).

LRT uses electric rail vehicles and may operate with just one vehicle or two that are connected; the LRT is not expected to be longer than 180 feet. However, because some Downtown City blocks are shorter than 180 feet, LRT vehicles would be given priority at traffic signals to avoid blocking intersections and crosswalks by stopped LRT vehicles. LRT vehicles are powered via overhead electric wire (catenary); therefore, there are no safety issues as there would be with a live third rail at ground level.

Existing road rights-of-way vary considerably in the study corridor (Table 2-1). Within Downtown, rights-of-way range from 78 feet along Washington Boulevard to 109 feet along Woodward Avenue south of Adams Street. North of Adams Street, the right-of-way widens along Woodward Avenue to 120 feet until reaching Grand Boulevard. The narrowest section of Woodward Avenue – at 100 feet – is north of Grand Boulevard to Manchester Parkway, where the right-of-way returns to 120 feet. The widest section of right-of-way is north of McNichols Road where it widens to 204 feet. Figures 2-2 and 2-3 illustrate the proposed cross-section of the median-running LRT alignment separated from other, vehicular traffic in 120-foot and 100-foot rights-of-way, respectively.

Figure 2-1. Preferred Alternative

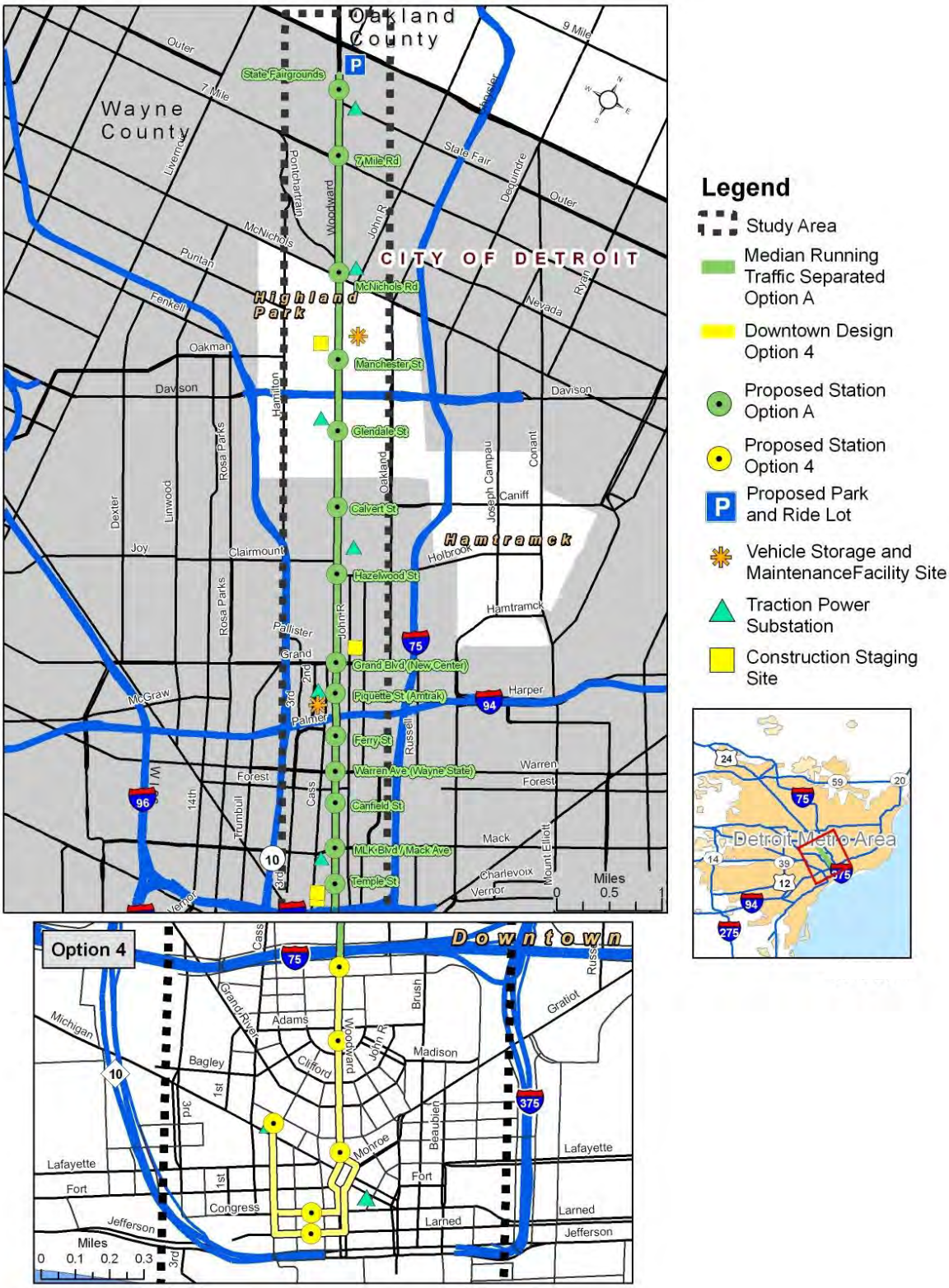

Source: Parsons Brinckerhoff, 2011

Figure 2-2. Cross Section of Median-Running Traffic Separated in 120-foot Right-of-Way

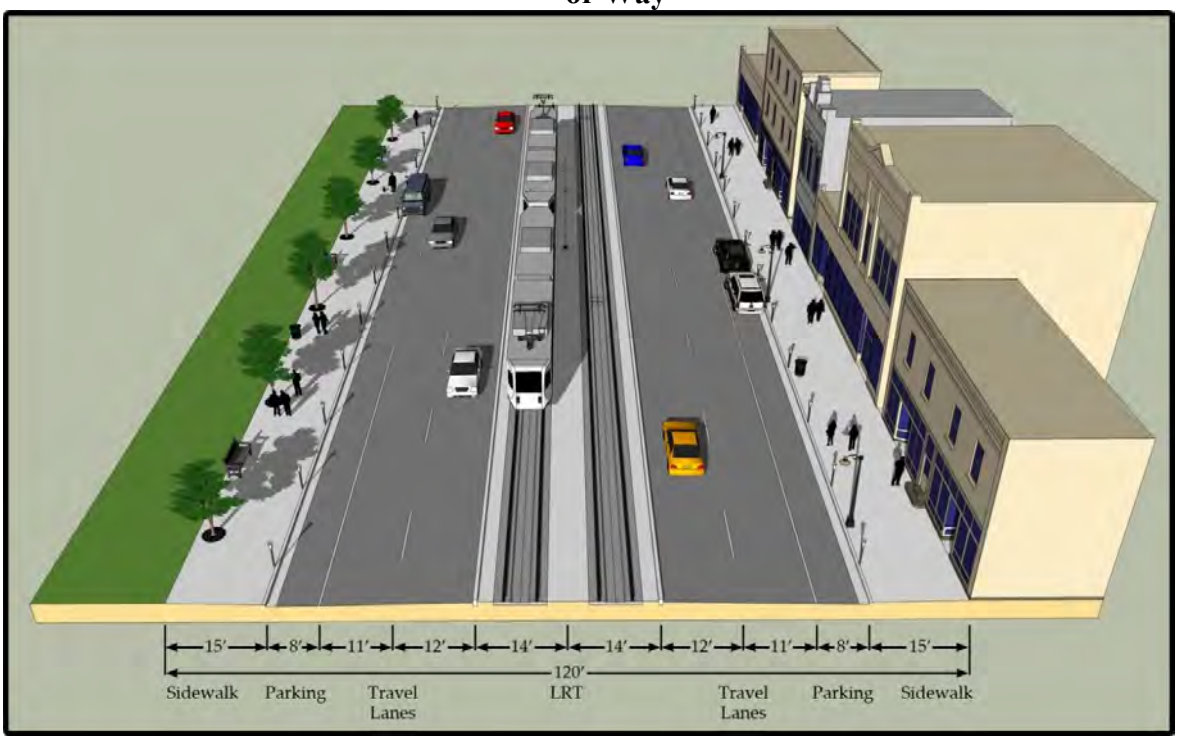

Source: Parsons Brinckerhoff, 2010

Figure 2-3. Cross Section of Median-RunningTraffic Separated in 100-foot Right-of-Way

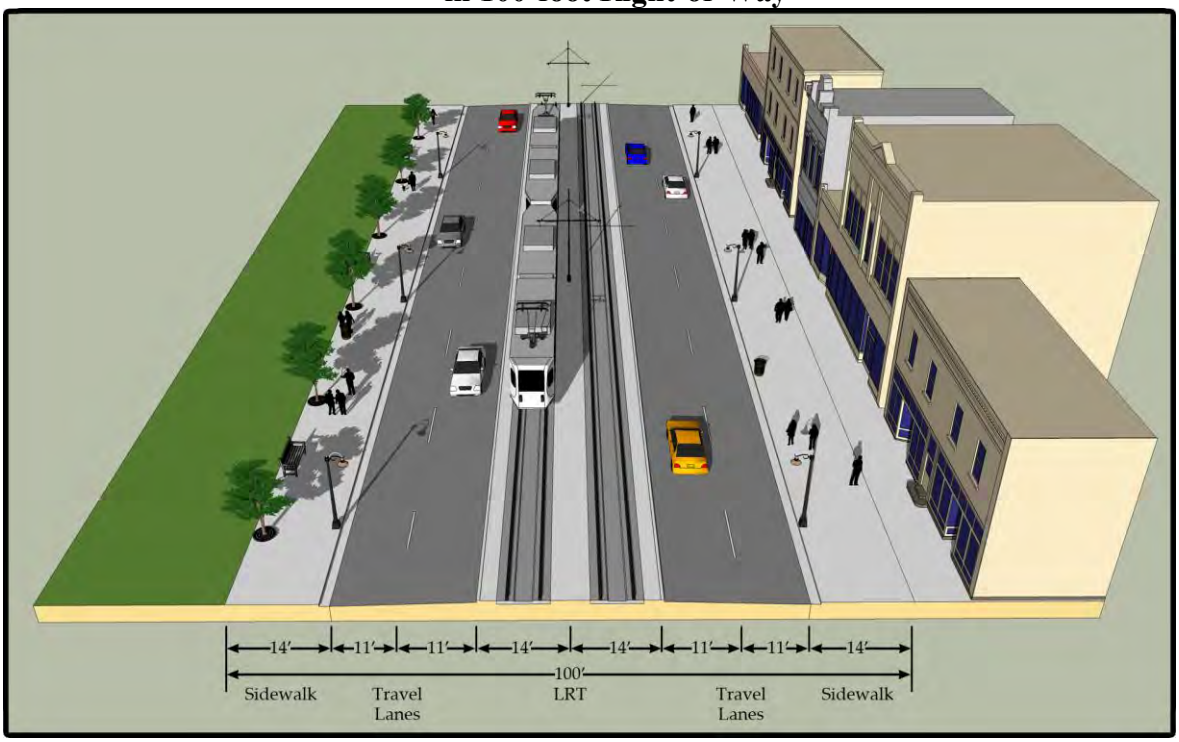

Source: Parsons Brinckerhoff, 2010

Table 2-1. Right-of-Way Width along Woodward Avenue

Right-of-Way Section	Right-of-Way Width
Adams Street to Grand Boulevard	120-feet
Grand Boulevard to Manchester Street	100-feet
Manchester Street to Midland Street	120-feet
Midland Street to McNichols Road	100-feet
McNichols Road to State Fair Avenue	204-feet

Source: Michigan Department of Transportation, 2011

2.2.2 LRT Stations

The following 19 LRT stations (Figure 2-1) would be sited along the Preferred Alternative's alignment; median-running stations are identified with an asterisk (*):

1. Cobo Center: Larned at Shelby Street & Congress at Shelby Street
2. Rosa Parks Transit Center (Washington Boulevard)
3. Michigan Avenue
4. Adams/Grand Circus Park
5. Foxtown/Stadium*
6. Temple Street*
7. MLK Boulevard/Mack Avenue
8. Canfield Street*
9. Warren Avenue
10. Ferry Street*
11. Piquette Street/Amtrak Station
12. Grand Boulevard
13. Hazelwood Street/Holbrook Street
14. Calvert Street
15. Glendale Street
16. Manchester Street
17. McNichols Road
18. 7 Mile Road
19. State Fairgrounds

The LRT stations would be designed to include a number of components essential for safety and security, as well as amenities for passenger comfort and convenience and compliance with the Americans with Disabilities Act (ADA). Primary elements include platform, shelter, wheelchair ramps, and station amenities such as lighting, benches, security systems, and informational displays. The platforms would be compatible with low-floor LRT vehicles, typically requiring a 14-inch station platform height. Platform length would likely range from 140 to 180 feet, based on LRT vehicle length, space available for each transit station, and whether the alignment is median- or curb-running. Platform width would typically range from 18 to 24 feet for double-sided platforms (Figure 2-4) and 10.5 to 12 feet for single-sided platforms (Figure 2-5). Some accommodation would need to be made for loading space at the ramp ends and access ramps.

Station shelters would be designed to protect passengers from the elements and to fit visually within each station's setting. Shelter design for stations would have a conventional canopy; canopy design guidelines would be developed during the proposed Project's design phase. Remaining sidewalk widths behind curb-running/mixed-traffic stations would be no less than eight feet.

Figure 2-4. Cross Section at Median-Running Station

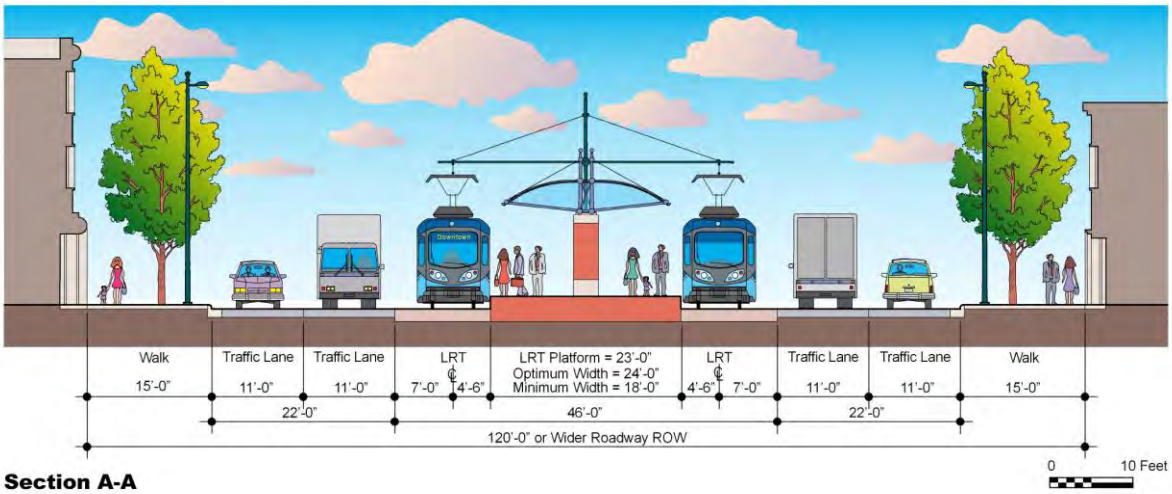

Source: URS, 2010

Figure 2-5. Cross Section at Curb-Running Station

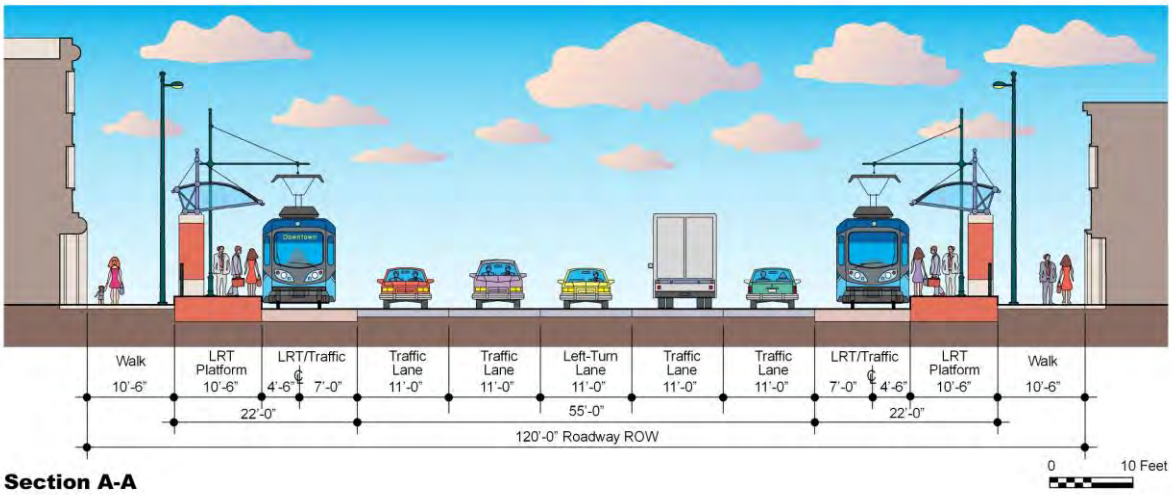

Source: URS, 2010

2.2.3 Facilities

Vehicle Storage and Maintenance Facility

The proposed VSMF would provide for indoor storage, inspection, repair and light maintenance of LRT equipment, and administrative offices. The square footage of the facility is anticipated to

be between 75,000 and 110,000 square feet, depending on site size and configuration and facility design. Three sites were identified based on proximity to Woodward Avenue, size and configuration, zoning, site ownership, potential utilities and traffic impacts, and community sentiment (Figure 2-6). However, the VSMF site proposed to occupy two lots north and south of West Stimson Street, just west of Woodward Avenue and south of MLK/Mack Avenue, was eliminated from consideration due to its proximity to residential uses. The remaining VSMF sites are as follows:

- Amsterdam Street Site (4.6 acres) – would occupy two lots east and west of Cass Avenue between Amsterdam Street and the two grade-separated tracks owned by Consolidated Rail Corporation (CR) and Canadian National Railway (CN), respectively, just south of Baltimore Avenue. This site would have frontage on Woodward Avenue and is adjacent to the Amtrak Station.
- Highland Park Ford Plant Site (19.0 acres) – would occupy one large lot east of Woodward Avenue north of Manchester Street and the former Highland Park Ford Plant. As this site is about 900 feet east of Woodward Avenue, direct access would be via the right-of-way for CR's currently abandoned rail line.

The entrance to the VSMF would need to be signalized, but LRT vehicles would only access the facility during off-peak hours. This signal is not expected to have an impact on the morning or evening peak-hour traffic operations.

Figure 2-6. Vehicle Storage and Maintenance Facility Sites

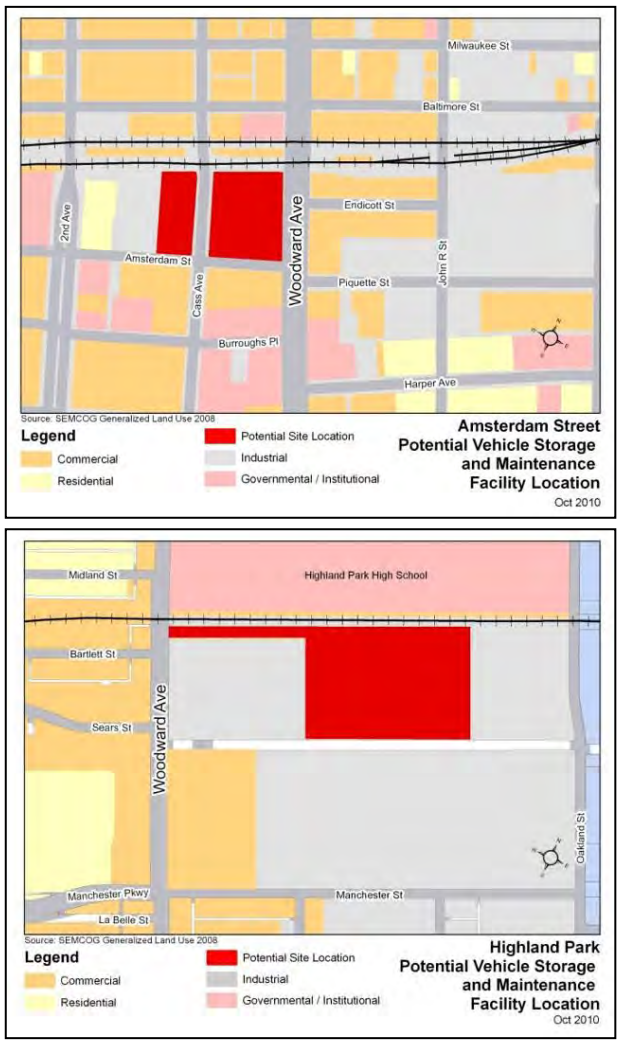

Source: Parsons Brinckerhoff, 2010

Park and Ride Lot

A park and ride lot would be located near the proposed Shoppes at Detroit's Gateway development at the southeast corner of 8 Mile Road and Woodward Avenue (Figure 2-1). The lot is accessible from northbound and southbound Woodward Avenue and expected to have 400 parking spaces. (Parking fees have not been determined at this stage of the Project.) A pedestrian overpass would provide access from the parking lot to the proposed median-located LRT station. An existing bus stop and transfer station at the State Fair Grounds would be maintained.

Traction Power Substations

LRT's electric traction power system requires TPSS approximately every mile, depending on the frequency and size of the vehicles. These substations, which are approximately 25 by 60 feet in dimension, require vehicular access and a relatively small site (30 by 70 feet). These facilities do not need to be immediately adjacent to the tracks. Because of this flexibility, substations can be located to minimize visual intrusions and can be visually shielded using fencing, landscaping, or walls, or can be incorporated into existing buildings. Eight TPSS sites have been preliminarily identified for the Preferred Alternative (Figure 2-1); the locations will be refined during the preliminary engineering phase of project development.

2.2.4 Construction Phasing and Staging Areas

The Preferred Alternative would be constructed in two phases. Phase 1 would entail construction of the LRT trackage, 12 LRT stations and four TPSS between Downtown and Grand Boulevard (Figure 2-1). A temporary VSMF would be constructed at the Amsterdam Avenue site to service the Phase I LRT system until Phase 2 is built. Phase 2 would entail construction of the northern segment of the Woodward Avenue LRT Project, from Grand Boulevard to the Michigan State Fairgrounds, comprising LRT trackage, seven LRT stations, four TPSS and the permanent VSMF on the Highland Park Ford Plant site. Following completion of the permanent VSMF construction, the temporary facility at Amsterdam Avenue would be demolished.

During construction of the LRT, several small sites would be required for the temporary storage of materials and equipment and would be located in the general vicinity of the Preferred Alternative (Figure 2-1). Following construction, the construction staging areas would be made available for other, more permanent development. Four construction staging areas have been initially identified. Two sites, located north of I-75, south of MLK/Mack Avenue and west of Woodward Avenue, are approximately 0.9 and 1.6 acres in size, respectively. A third site, 1.6 acres in size, is proposed for the northeast corner of East Bethune Street and Woodward Avenue. A fourth site, 0.9 acre in size, is proposed in Highland Park at the southwest corner of Sears Street and Woodward Avenue. Each of these four parcels is presently undeveloped and vacant.

2.3 Other Alternatives

The other alternatives (A1, B2, B3) evaluated in the FEIS, in addition to the Preferred Alternative, represent combinations of two operating options on Woodward Avenue and three Downtown design options, as described below. These alternatives' effects on transit, non-motorized and motorized safety; traffic operations and parking; and other transportation elements are discussed in Chapter 7.0.

2.3.1 Operating Options on Woodward Avenue

The two operating options considered for Woodward Avenue are as follows:

Operating Option A: Median-Running/Traffic Separated (Figure 2-2 and Figure 2-3)

The LRT would operate in the center median of Woodward Avenue from I-75 to the Michigan State Fairgrounds. Within this section, the LRT would be running separate from vehicular traffic. There may or may not be a physical barrier between the LRT and vehicular traffic. Stations with center platforms would be located in the median. There would be 11 stations north of I-75. This option includes one Downtown design option, Downtown Option 1 (described

below), and was originally identified as part of the DTOGS project. Examples of existing median-running LRT operations include portions of Boston's Green Line and San Jose's Blue Line. The Central Corridor between Minneapolis and St. Paul will also be constructed in the median.

Operating Option B: Curb-Running/Mixed Traffic (Figure 2-7)

The LRT would operate in the right-most travel lane (the second lane from the curb in areas with parking) of Woodward Avenue from I-75 to Piquette Street. From Piquette Street to the Michigan State Fairgrounds, the LRT would operate in the median, as described above. Within the curb-running/mixed traffic section, the LRT would be running with vehicular traffic. There would be 15 stations. Downtown portions of many LRT systems operate in this manner, such as Portland's Streetcar System. Option B includes two Downtown design options, Downtown Options 2 and 3 (described below), and were identified during stakeholder meetings following the DTOGS.

Figure 2-7. Cross-Section of Curb-Running/Mixed Traffic in 120-foot Right-of-Way

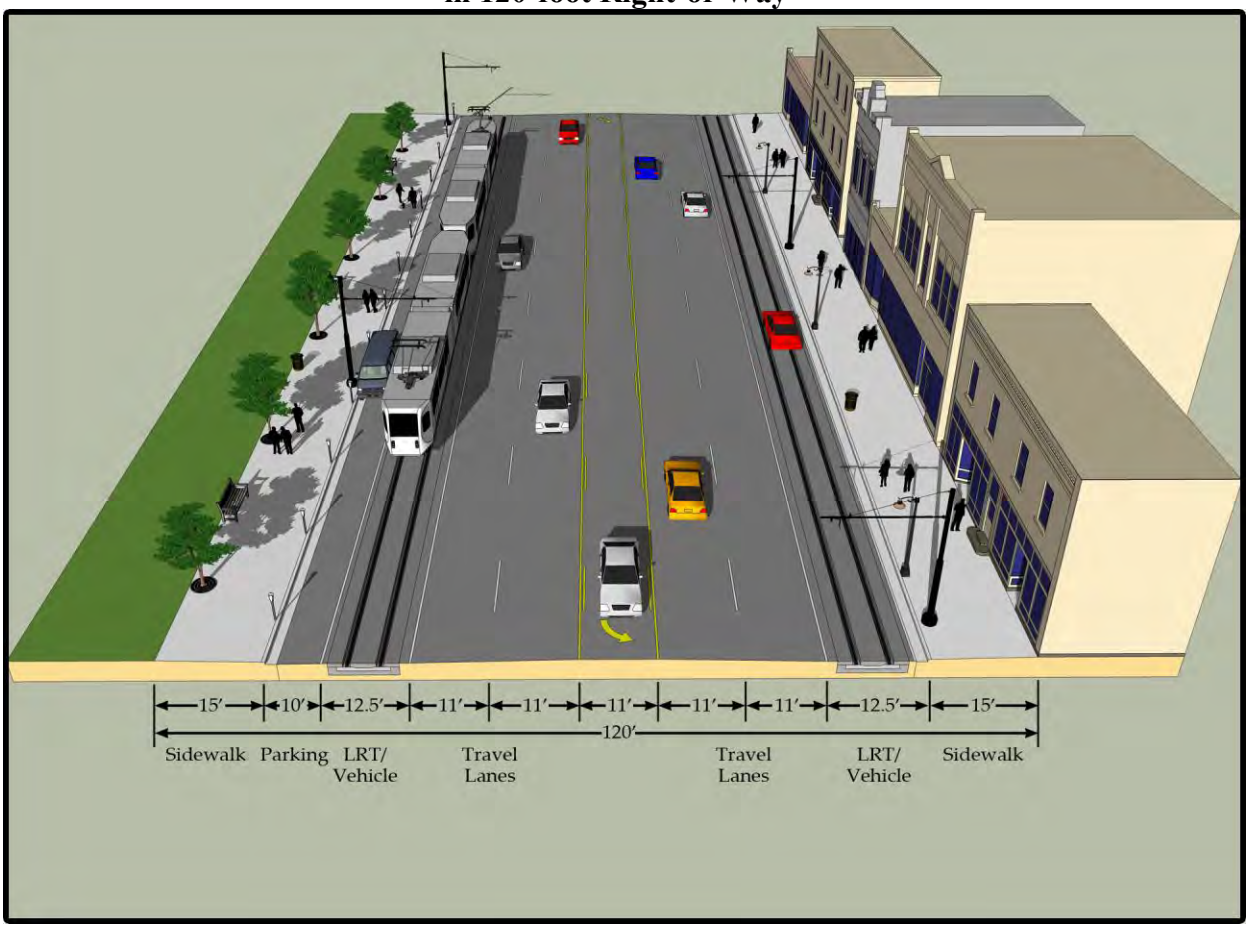

Source: Parsons Brinckerhoff, 2010

2.3.2 Downtown Design Options

The three Downtown design options, which were combined with the two operating options described above, are discussed below.

Downtown Option 1: Woodward, Grand River, Washington, Larned, Randolph, Congress

Option 1 would include median-running dual tracks south on Woodward Avenue to Grand River Avenue. On Grand River Avenue, the LRT would run westbound in the opposite direction of vehicular traffic in an exclusive right-of-way. It would then travel south in the median on Washington Boulevard to Larned Street, at which point it would transition to a single-track, curb-running, one-way loop east on Larned Street to Randolph Street, then west on Congress Street back to Washington Boulevard, and then east with vehicular traffic on Grand River Avenue back to Woodward Avenue. This option has five stations and was evaluated with the median-running Operating Option A along Woodward Avenue.

Downtown Option 2: Woodward, State, Washington, Larned, Randolph, Congress

Option 2 would include curb-running single tracks south on Woodward Avenue to State Street, then south on the west side of Washington Boulevard to Larned Street. At that point it would transition to a single-track, curb-running, one-way loop east on Larned Street to Randolph Street, then west on Congress Street back to the east side of Washington Boulevard, and then east in the opposite direction of vehicular traffic on State Street in an exclusive right-of-way, back to northbound Woodward Avenue. This option has seven stations and was evaluated with the curb-running Operating Option B along Woodward Avenue.

Downtown Option 3: Woodward Avenue

Option 3 would include curb-running single tracks south on Woodward Avenue to Campus Martius, counter-clockwise travel around Campus Martius in the direction of vehicular traffic, and then continuing south on Woodward Avenue to a stop on Woodward Avenue between Congress and Larned Streets. It would then reverse direction to travel north on Woodward Avenue, counter-clockwise around Campus Martius with vehicular traffic and then continue north. This option has four stations and was evaluated with curb-running Operating Option B along Woodward Avenue.

These three Downtown design options, including stations, would lie entirely within existing available right-of-way.

2.3.3 Alternatives A1, B2, and B3

The operating and Downtown design options described, respectively, in Sections 2.3.1 and 2.3.2, above, were combined to create three Project alternatives, as follows:

- Alternative A1 – median-running with Downtown design option 1 (Figure 2-8) and 15 stations (Table 2-2);
- Alternative B2 – curb-running with Downtown design option 2 (Figure 2-9) and 21 stations (Table 2-2); and
- Alternative B3 – curb-running with Downtown design option 3 (Figure 2-10) and 18 stations (Table 2-2).

The stations proposed with these alternatives would be designed as described for the Preferred Alternative (Section 2.2.2). However, stations with curb-running Alternatives B2 and B3 would bump out about eight feet from the existing sidewalks and remove any current on-street parking.

Figure 2-8. Alternative A1

Source: Parsons Brinckerhoff, 2011

Figure 2-9. Alternative B2

Source: Parsons Brinckerhoff, 2011

Figure 2-10. Alternative B3

Source: Parsons Brinckerhoff, 2011

Table 2-2. LRT Station Locations with Alternatives A1, B2, B3

LRT Station	Alternative A1	Alternative B2	Alternative B3
Cobo Center: Larned at Washington Boulevard & Congress at Washington	X	X	
Woodward: Larned at Woodward & Congress at Woodward		X	X
Cobo Center: Larned at Washington Boulevard & Congress at Washington Boulevard	X	X	
Woodward: Larned at Woodward & Congress at Woodward		X	X
Randolph St.: Larned at Randolph & Congress at Randolph	X		
Randolph Street		X	
Rosa Parks Transit Center (Washington Boulevard)	X	X	
Michigan Avenue			X
State/Gratiot		X	
Grand River	X		
Adams/Grand Circus Park		X	X
Foxtown/Stadium	X	X	X
Temple Street		X	X
MLK Blvd./Mack Avenue	X	X	X
Canfield Street		X	X
Warren Avenue	X	X	X
Ferry Street		X	X
Piquette Street/Amtrak Station	X	X	X
Grand Boulevard	X	X	X
Hazelwood Street/Holbrook Street	X	X	X
Calvert Street	X	X	X
Glendale Street	X	X	X
Manchester Street	X	X	X
McNichols Road	X	X	X
7 Mile Road	X	X	X
State Fair	X	X	X
Total Stations	**16**	**21**	**18**

Source: Parsons Brinckerhoff, 2010

2.3.4 Facilities

Alternatives A1, B2, and B3 were evaluated with the same VSMF, park and ride lot, and TPSS facilities as are described for the Preferred Alternative (Section 2.2.3), with the exception that Alternatives A1 and B2 would have eight TPSS and Alternative B3 would have seven TPSS.

A third VSMF site was considered with these alternatives. The MLK Boulevard Site (4.2 acres) would occupy two lots north and south of West Stimson Street, just west of Woodard Avenue and south of MLK/Mack Avenue. This site would have frontage on Woodward Avenue.

3.0 Existing Transportation Conditions

This chapter summarizes existing transportation conditions within the study corridor, including transit and non-motorized conditions and the number and types of vehicle crashes, parking, and traffic conditions.

3.1 Transit Service, Safety, and Security

There are four major local transit service providers within the study corridor: Detroit Department of Transportation (DDOT), Suburban Metropolitan Authority for Regional Transportation (SMART), Detroit Transportation Corporation (DTC), and Transit Windsor. Amtrak, Greyhound, and Megabus provide intercity rail and bus services to the study corridor, as well. Figure 3-1 shows total ridership by provider between 2005 and 2009. In addition, Wayne State University, the College for Creative Studies, and the Detroit Medical Center operate shuttle services operating within the study corridor. There are two major transit centers within the study corridor: the Rosa Parks Transit Center and the State Fair Transit Center.

Figure 3-1. Ridership by Provider

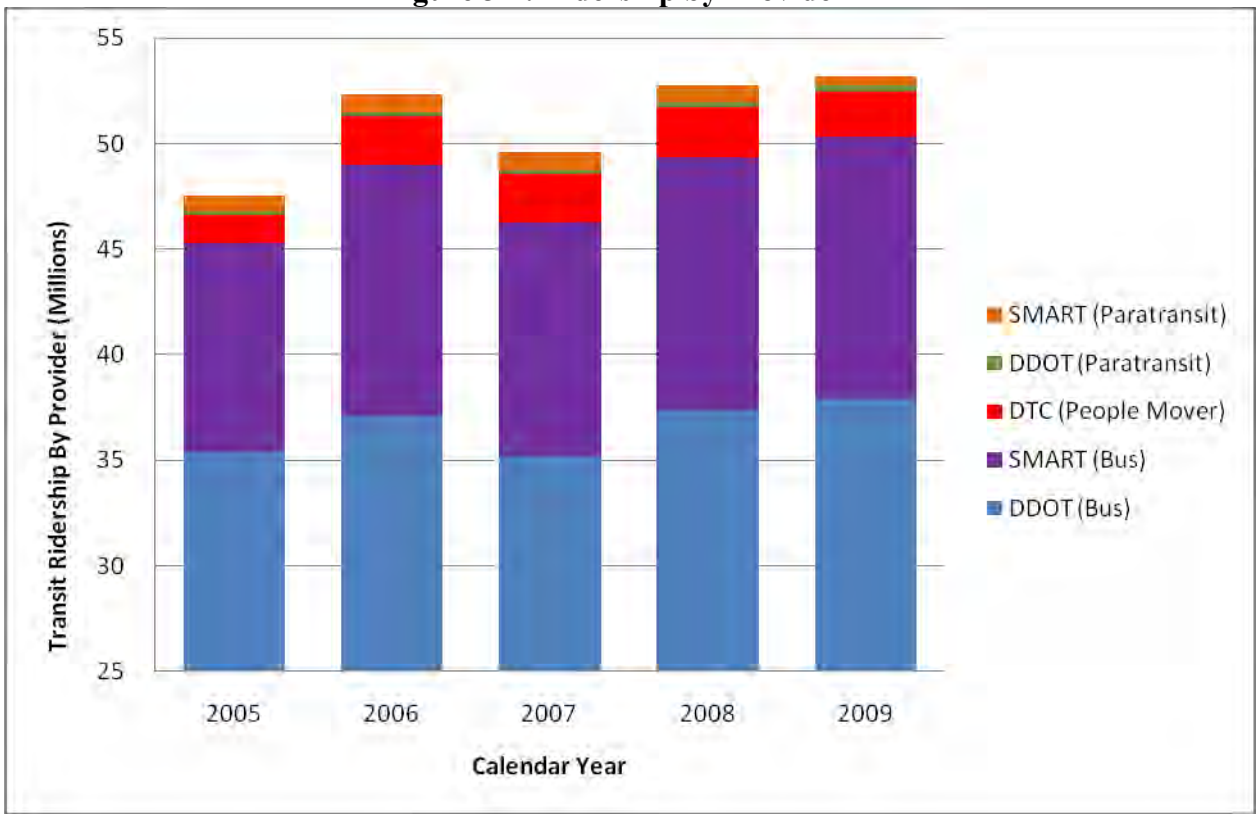

Source: Parsons Brinckerhoff, 2010

3.1.1 Detroit Department of Transportation

DDOT is the major bus transit provider in southeastern Michigan, carrying approximately 130,000 daily passengers on 42 routes in Detroit and 22 neighboring communities and is the State's largest transit carrier, with annual passengers totaling 38.6 million (2009). DDOT also provides paratransit service; Detroit MetroLift provided service for approximately 271,000 passengers in 2009.

Slightly more than half of DDOT's bus routes run to Downtown from outlying neighborhoods. Typically these lines bring riders from residential areas throughout the City to jobs, government offices, or other destinations Downtown. DDOT's 20 other bus routes run east-west or north-south connecting neighborhoods and feeding riders to Downtown routes. Downtown Detroit has the region's largest and most dense concentration of jobs, along with a wide range of other important destinations, including government offices and major entertainment venues, making it a natural focal point for transit services. Ten Downtown-oriented routes run at least partially along Woodward Avenue, including Route 53 with an annual ridership of 3.8 million (2009).

DDOT's base bus fare is $1.50 per trip, with half-price fares available for students, elderly and disabled riders. Monthly and weekly passes are also available, including a joint monthly pass for DDOT and SMART.

3.1.2 Suburban Mobility Authority for Regional Transportation

SMART serves Detroit, including Downtown, and more than 70 suburban communities in the counties of Macomb, Oakland, and Wayne. SMART is the second largest transit provider in Michigan with 12.4 million passengers annually (2009), including service with flexible pick-up and drop-off according to passenger needs for approximately 412,000 passengers. SMART service within Detroit consists of express commuter routes traveling between the suburbs and Downtown, while local service is more typical in suburban areas. Six SMART routes provide service along Woodward Avenue, with a combined annual ridership of 2.5 million (2009).

SMART's base fare is $2.00 per ride, with discounts available for students and youth (adult fare is $2.50). Park-and-ride costs an additional $0.50. In addition to students, there are also discounts for the disabled and the elderly. Transfers to DDOT or other SMART buses cost $0.50, and the Transit Windsor Tunnel Bus accepts SMART transfers for a $1.50 reduction in the regular fare.

3.1.3 Detroit Transportation Corporation

DTC operates the Detroit People Mover (DPM), connecting major activity centers in Downtown via a fully automated, elevated rail system and 13 stations. Twelve computer-controlled driverless vehicles travel along a 2.9-mile single-track, one-way, clock-wise loop. In 2009, approximately 5,500 daily passengers used the DPM, with a total annual ridership of 2.1 million. DPM's ridership for special events is estimated at 10,000 to 15,000 passengers per event. Frequency of service is every three to four minutes and a round-trip ride on the system takes approximately 15 minutes. DPM's base fare is $0.50 per ride, with monthly and yearly passes available for frequent riders.

3.1.4 Transit Windsor

Transit Windsor provides one bus route that shuttles passengers between Downtown Detroit and Windsor, Ontario, via the Detroit-Windsor Tunnel. The bus circulates through Downtown and has one stop along Woodward Avenue at Larned Street; it also stops at the Rosa Parks Transit Center. This route had an annual ridership of 200,000 in 2009.

Basic service is provided every 30 minutes between 5:30 a.m. and 1:00 a.m., with Sunday service from 8:00 a.m. to 1:00 a.m. During peak commuting hours, service is provided every 20 minutes. Special-event service is also provided to Downtown Detroit for concerts and sporting events.

Base fare is $3.75 (Canadian) for the Tunnel Route, or $3.50 (Canadian) if four tickets are purchased in advance. Special event tickets are $4.00 (Canadian).

3.1.5 Intercity Services

Intercity passenger rail service is provided by Amtrak's Wolverine line. Detroit's Amtrak station is located at 11 Baltimore Street west of Woodward Avenue in the New Center area. In 2009, 58,169 passengers boarded and alighted at the Detroit Amtrak station, an increase of 4 percent since 2006. Three round trips are provided daily between the cities of Pontiac and Chicago via Detroit. The proposed Detroit-Ann Arbor Commuter Rail would also use this Amtrak Station. SMART and DDOT bus routes have stops near the Amtrak station, providing connectivity between the transit systems. The Greyhound Bus Terminal at 1001 Howard Street in Downtown Detroit offers intercity bus service. Megabus offers connections to Chicago, Illinois, and picks up at the Rosa Parks Transit Center.

3.1.6 Other Transit Providers

Three shuttle services operate within the study corridor. These services are operated by Wayne State University, the Detroit Medical Center, and the College for Creative Studies. Wayne State University currently offers two campus shuttles, free for faculty and students, which provides service between parking facilities and buildings. These shuttles use 15-passenger vans and run from 7:00 a.m. to 9:00 p.m. Monday through Friday with 15-minute intervals between shuttles. There are nine stops for the Main Campus Shuttle, with an additional two stops for the Medical Campus Shuttle. The shuttle operates mainly on Cass Avenue, Second Street, Third Street, and St. Antoine Street with the northernmost stop located on Woodward Avenue at Burroughs Street and the southernmost stop located on Mack Avenue at John R Street.

The Detroit Medical Center provides complimentary shuttle service 24 hours a day, seven days a week for patients, visitors, and employees. The shuttles use either standard 24-passenger buses or a 10-passenger van. The shuttle runs along St. Antoine Street, John R Street, Warren Avenue, and Mack Avenue. There are seven stops with the option for another four stops, if requested. The easternmost stop closest to Woodward Avenue is located along John R Street north of Mack Avenue.

Finally, the College for Creative Studies offers shuttle service between its main campus at 201 East Kirby Street and a satellite campus in the Argonaut Building in the New Center area.

3.1.7 Transit Centers

Rosa Parks Transit Center

Located at 360 Michigan Avenue, the Rosa Parks Transit Center is a 25,000-square-foot facility with over two acres of exterior transit access. It serves as a single transfer point for 21 DDOT bus routes, the SMART suburban bus system, the DTM and Transit Windsor. Transfers between SMART and DDOT are currently accepted by both systems. The center also offers a Megabus stop, taxi access, and space for a café, retail space, and ticket information, and vending machines. There are a number of public pay parking lots near the transit center.

State Fair Transit Center

Located on the Michigan State Fairgrounds at 8 Mile Road and Woodward Avenue, the State Fair Transit Center is served by up to six DDOT bus routes seven days a week. In addition, SMART serves a stop on Woodward Avenue just outside this transit center with five routes.

Three SMART routes enter the State Fair Transfer Center. Transfers between SMART and DDOT are currently accepted by both systems. There is no on-street parking and no designated park-and-ride lot near the transit center.

3.1.8 Transit Services in the Corridor

The Woodward Avenue transit corridor has the highest ridership in the current transit system. Each of the Downtown-oriented lines has a stop or stops within 0.25 miles or less (i.e., within walking distance) of Woodward Avenue. Ten of the Downtown lines run at least partially along Woodward Avenue, including Route 53, which runs the entire length of Woodward Avenue from Downtown to the State Fair Transit Center near the City border at 8 Mile Road. Figure 3-2 illustrates the existing transit services along the study corridor. Scheduled travel time on Route 53 between State Fair Avenue and Beaubien Street and Jefferson Avenue is 47 minutes southbound in the morning and 50 minutes northbound in the evening.

Many of the SMART routes also converge in the Detroit Central Business District (CBD), within the study corridor. Even outside the CBD, Woodward Avenue is an important transit corridor, with eight bus routes serving the State Fair Transit Center and a number of SMART routes reaching Downtown via Woodward Avenue. Route 53 has the highest ridership of all of DDOT's bus lines, carrying 12,600 riders on a typical weekday in 2009. Combined with the SMART routes, total weekday ridership in the Corridor is well over 20,000 passengers (Table 3-1).

Table 3-1. Ridership on Woodward Avenue Bus Routes (2009)

Route	Average Weekday Ridership	Average Saturday Ridership	Average Sunday Ridership
DDOT Route 53	12,600	7,500	5,000
SMART Route 415/420	1,601	791	292
SMART Route 445/475	372	NA	NA
SMART Route 450/460	5,656	4,713	2,735
SMART Route 465	306	NA	NA
SMART Route 495	2,566	1,268	615
Total Ridership	**23,101**	**14,272**	**8,642**

Source: DDOT and SMART, 2009

In addition to regular scheduled service, DDOT sometimes adds "school spots" (i.e., additional buses that cover only part of a route, typically beginning at a high school) to handle surges in ridership. DDOT previously provided a peak-hour Woodward Express service, which did not stop at all local stops along Woodward Avenue, but that service was discontinued in June 2008.

Transit Windsor and the DPM are primarily Downtown circulators and have multiple stops within the southern part of the study corridor. With a single transfer, the DPM can bring SMART and DDOT riders from the Woodward Avenue Corridor to numerous destinations throughout Downtown.

3.1.9 Transit Safety and Security

Transit passengers in the study corridor currently use curbside bus stops, often jaywalking across Woodward Avenue at unsignalized midblock locations to gain access rather than crossing at signalized crosswalks. Bus operators are responsible for maintaining security on the buses. In

case of emergency on board a bus, bus operators notify a dispatcher who, in turn, notifies City police who respond to the situation. Also, Detroit Police occasionally patrol the bus routes.

Figure 3-2. Existing Transit Services (2009)

Source: Parsons Brinckerhoff (2010)

3.2 Non-Motorized Facilities and Safety

3.2.1 Non-Motorized Facilities

There are sidewalks on both sides of all roadways along the proposed LRT alignment. Most of the sidewalks along Woodward Avenue from I-75 to State Fair Avenue vary in width from six feet in the northern part of the Corridor to as much as 15 feet in the southern part. Sidewalks in Downtown vary in width between eight and 20 feet. As of 2010, the City of Detroit is in the process of updating all pedestrian ramps at signalized and unsignalized intersections to meet the latest Americans with Disabilities Act (ADA) requirements.

All traffic signals along the study corridor have pedestrian crossing signals. In 2003, MDOT updated all clearance intervals for the traffic signals along Woodward Avenue from Adams Avenue to State Fair Avenue. The pedestrian walk indication time varies between four seconds (the minimum) to seven seconds. All flash-do-not-walk clearance times are based on a walking speed of four feet per second. Within Downtown, the City of Detroit has installed pedestrian countdown signals with recently updated minimum walk times of seven seconds, assuming a walking speed of four feet per second used for the flash-do-not-walk time. One pedestrian-only crossing signal is located on Larned Street between Woodward Avenue and Randolph Street.

The Midtown Loop Greenway is an urban shared-use path along Cass Avenue, Canfield Avenue, John R Street, and Kirby Street, within City right-of-way. Beginning in 2010, the Kirby Street and John R Street alignments were under construction, and there are design plans for the Canfield Street and Cass Avenue segments. The Midtown Loop Greenway crosses Woodward Avenue at Kirby Street and Canfield Street. These shared-used paths are being constructed and maintained by the University Cultural Center Association (UCCA), a non-profit community development agency in Midtown Detroit.

There are currently no bicycle lanes in the study corridor. In June 2006, the Detroit City Council adopted the City of Detroit Non-Motorized Urban Transportation Master Plan. The plan defines locations and types of non-motorized facilities, which it recommends for the entire City, and proposes a strategy to implement the recommended improvements. The plan outlines additional strategies related to future maintenance and growth of the non-motorized system. The City of Detroit Traffic Engineering Division has developed guidelines for bicycle lane standards.

Woodward Avenue is identified as a regional connector in the Master Plan, since the roadway provides direct connectivity among major activity centers within the City and the northern suburbs. Roadways parallel to Woodward Avenue that are identified in the Master Plan include Second Avenue, John R Street, Third Street, Cass Avenue, and Brush Street. Woodward Avenue, Washington Boulevard, Congress Street, Larned Street, Randolph Street, and Grand River Avenue are identified as Downtown-Midtown Connectors.

According to the City of Detroit Traffic Engineering Division and MDOT, there is currently no funding available or plans to construct bicycle lanes along Woodward Avenue or within Downtown Detroit.

Table 3-2 summarizes the current maximum distance that a pedestrian would have to walk to get from one side of Woodward Avenue to the other using a signalized marked crosswalk. This distance was determined by measuring the length between two signalized intersections since the maximum distance occurs from mid-block on one side to mid-block on the other side. A

walking speed of four feet per second was used to determine the number of minutes needed to walk the distance; one minute was added for wait time for a walk signal.

The maximum distance for pedestrians crossing Woodward Avenue at a signalized intersection occurs in the northern area of the study corridor, north of McNichols Road. This area includes a boulevard with signals spaced every 0.33 miles to 0.5 miles. The locations south of McNichols Road are all less than a 10-minute walk from one side of Woodward Avenue to the other side when using a signalized marked crosswalk.

3.2.2 Non-Motorized Activity and Behavior

Pedestrian counts were taken in the study corridor between 2008 and 2010 at both signalized intersections and mid-block locations. The counts were taken during the peak morning hours of 7:00 to 9:00 a.m. and the evening hours of 4:00 to 6:00 p.m. on a Tuesday, Wednesday, or Thursday while school was in session. Figure 3-3 illustrates the amount of pedestrian activity along Woodward Avenue based on these pedestrian counts. As shown, the largest concentrations of pedestrian activity were near Warren Avenue, near Wayne State University, and near MLK/Mack Avenue. There were also high pedestrian activity levels in the City of Highland Park near the intersection of Woodward Avenue and Manchester Boulevard.

Transit passengers in the study corridor currently use curbside bus stops, often jaywalking across Woodward Avenue at unsignalized midblock locations to gain access, rather than crossing at signalized crosswalks. DDOT provided boarding and alighting information for an average day for Route 53: Woodward Avenue (Figure 3-4). As there are no park-and-ride lots along the Corridor, the majority of DDOT Route 53 passengers walk to and from the bus stop locations. The bus stops with the most boardings and alightings are the State Fairgrounds, Manchester Boulevard, near Wayne State University and the Medical Center (Figure 3-4). There is also a significant concentration of boardings and alightings at the stops between Grand Boulevard and Clairmount Street.

Bicycle counts were taken in October 2010 along segments of Woodward Avenue, as well as on parts of John R Street and Cass Avenue. Table 3-3 provides the numbers of bicyclists that were counted during the peak morning hours of 7:00 to 9:00 a.m. and the evening hours of 4:00 to 6:00 p.m. on a Tuesday, Wednesday, or Thursday when school was in session. During these four hours, there were 44 bicyclists on Woodward Avenue between I-75 and MLK/Mack Avenue; this number decreased until north of I-94. Volumes on Cass Avenue were higher than those on Woodward Avenue, particularly near Wayne State University. Of the 400 bicyclists that were counted during the survey, approximately 69 percent were either riding on the sidewalk or riding in the wrong direction on the street (e.g., riding northbound along a southbound travel lane).

The *Michigan Vehicle Code* indicates that bicyclists should *"ride as close as practicable to the right-hand curb or edge of the roadway"* with some exceptions, such as preparing to make a left-turn or if the right-hand edge of the roadway is *"unsafe or reasonably unusable by bicycles" (*State of Michigan, 2010*)*. Field observations indicate that while some bicycle users follow the code, others ride on the sidewalks.

Table 3-2. Existing Maximum Walking Distance to Cross at Signalized Intersections

From Street	To Street	Maximum Distance / Time to Cross the Street		
		Feet	Miles	Minutes*
NB I-75 Service Drive	Charlotte St	1,655	0.31	8
Charlotte St	Peterboro St/Erskine St	505	0.10	3.0
Peterboro St/Erskine St	MLK Jr. Blvd/Mack Ave	765	0.14	4.0
MLK Jr. Blvd/Mack Ave	Parsons St	370	0.07	2.5
Parsons St	Alexandrine St	840	0.16	4.5
Alexandrine St	Canfield St	850	0.16	4.5
Canfield St	Forest Ave	850	0.16	4.5
Forest Ave	Warren Ave	860	0.16	4.5
Warren Ave	Putnam St/Farnsworth St	410	0.08	3.0
Putnam St/Farnsworth St	Kirby St	810	0.15	6.0
Kirby St	Palmer St	895	0.17	4.0
Palmer St	WB I-94/Antoinette St	810	0.15	4.5
WB I-94/Antoinette St	Baltimore St	980	0.19	5.0
Baltimore St	Milwaukee St	300	0.06	2.5
Milwaukee St	Grand Blvd	460	0.09	3.0
Grand Blvd	Bethune St	860	0.16	4.5
Bethune St	Seward St/Marston St	1060	0.20	5.5
Seward St/Marston St	Euclid St	870	0.17	3.5
Euclid St	Hazelwood St/Holbrook St	1,630	0.31	8.0
Hazelwood St/Holbrook St	Clairmount St/Owen St	670	0.13	4.0
Clairmount St/Owen St	Chicago Blvd/Arden Park Blvd	1,450	0.27	7.0
Chicago Blvd/Arden Park Blvd	Calvert St/Trowbridge St	1,240	0.23	6.0
Calvert St/Trowbridge St	Tuxedo St/Tennyson St	1,680	0.32	8.0
Tuxedo St/Tennyson St	Cortland St	1,355	0.26	6.5
Cortland St	Glendale St/McLean St	835	0.16	4.5
Glendale St/McLean St	Buena Vista St	900	0.17	5.0
Buena Vista St	EB M-8	830	0.16	4.5
EB M-8	WB M-8	260	0.05	2.0
WB M-8	Grand St	195	0.04	2.0
Grand St	Gerald St	510	0.10	3.0
Gerald St	Manchester Pkwy	665	0.13	4.0
Manchester Pkwy	Sears St	1,070	0.20	5.5
Sears St	Ferris St/Pilgrim St	1,360	0.26	6.5
Ferris St/Pilgrim St	McNichols Rd	1,910	0.36	9.0
McNichols Rd	Nevada St	2,230	0.42	10.5
Nevada St	Grixdale St	1,600	0.30	7.5
Grixdale St	7 Mile Rd	2,050	0.39	9.5
7 Mile Rd	State Fair Ave	2,900	0.55	13.0
State Fair Ave	State Fair Bus Loop	870	0.16	4.5

Source: Parsons Brinckerhoff, 2010

*Based on four feet/second walking speed and one minute to wait for the signal to cross the street

Figure 3-3. Woodward Avenue and Vicinity Pedestrian Volumes (2010)

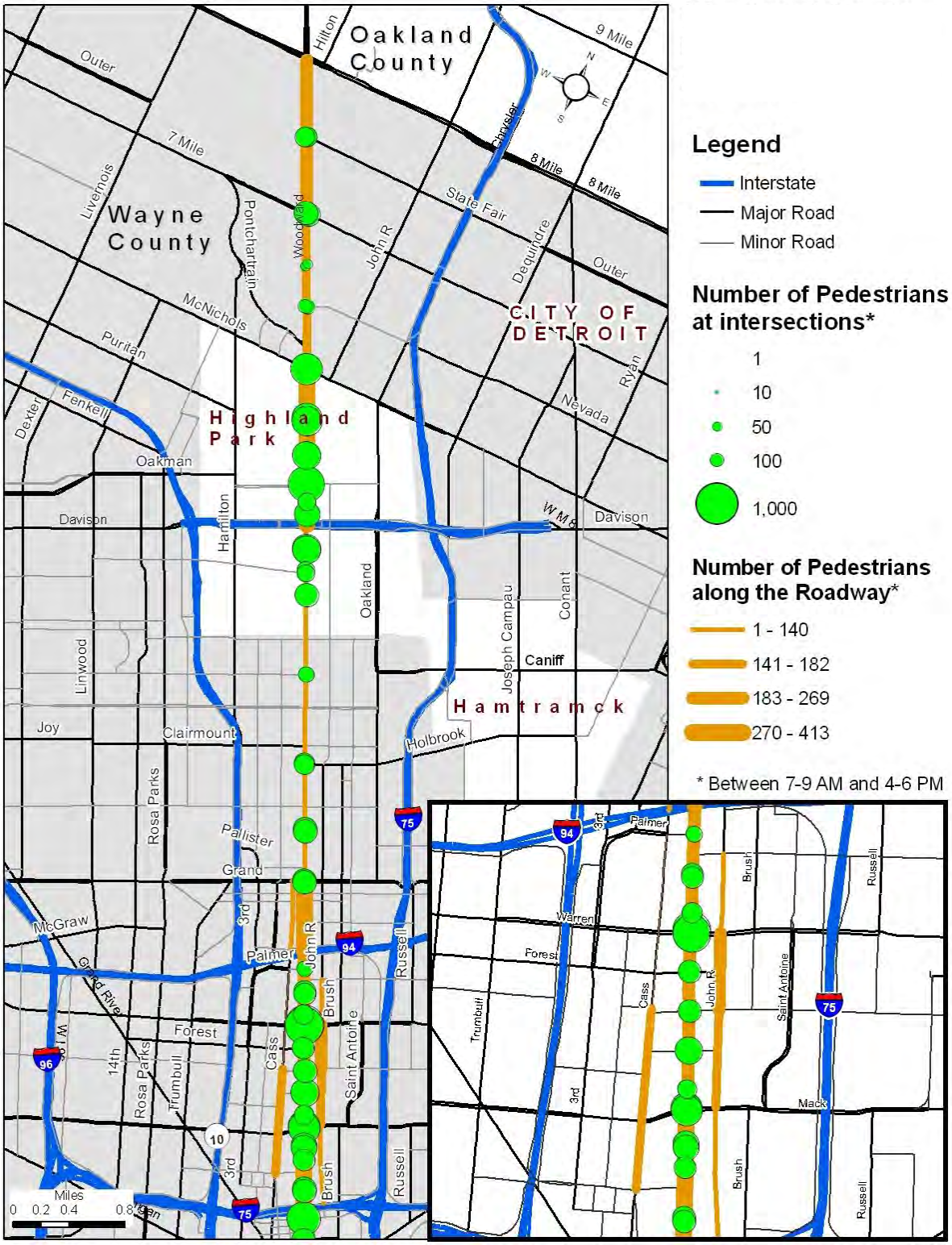

Source: MDOT, DDOT, and Parsons Brinckerhoff, 2010

Figure 3-4. Woodward Avenue Transit Passenger Volumes (2010)

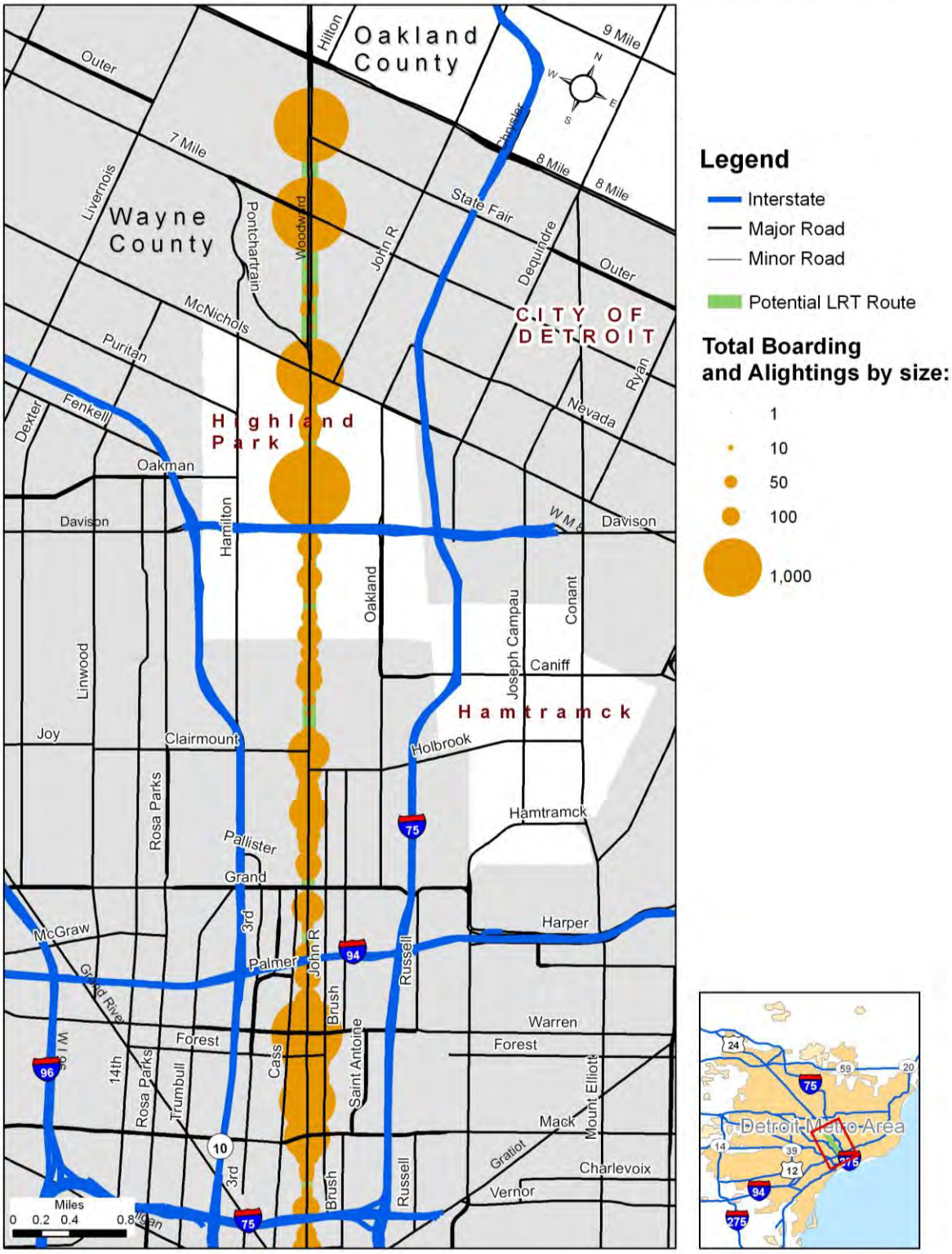

Source: DDOT and Parsons Brinckerhoff, 2010

Table 3-3. Bicycle Counts (2010)

Location	Morning Peak Period			Evening Peak Period		
	NB	SB	Total	NB	SB	Total
Woodward, I-75 and MLK/Mack	9 (9)	12 (9)	21 (18)	4 (3)	19 (15)	23 (18)
Woodward, MLK/Mack and Warren	3 (2)	0 (0)	3 (2)	1 (1)	1 (0)	2 (1)
Woodward, Warren and I-94	1 (0)	1 (0)	2 (0)	0 (0)	0 (0)	0 (0)
Woodward, I-94 and Grand	7 (5)	3 (0)	10 (5)	17(16)	12 (9)	29 (25)
Woodward, Grand and Chicago	0 (0)	4 (4)	4 (4)	2(2)	9 (9)	11 (11)
Woodward, Chicago and M-8	4 (4)	3 (3)	7 (7)	12(11)	2 (2)	14 (13)
Woodward, Manchester and McNichols	3 (1)	2 (2)	5 (3)	12(10)	3 (3)	15 (13)
Woodward, McNichols and 7 Mile	1 (0)	2 (1)	3 (1)	9(6)	4 (4)	13 (10)
Woodward, 7 Mile and 8 Mile	0 (0)	0 (0)	0 (0)	0(0)	0 (0)	0 (0)
Cass, I-94 and Grand	2 (0)	5 (2)	7 (2)	5(3)	2 (2)	7 (5)
Cass, Warren and Palmer	5 (4)	9 (7)	14 (11)	18(13)	22 (21)	40 (34)
Cass, Canfield and Warren	29 (10)	8 (2)	37 (12)	19(12)	27 (17)	46 (29)
Cass, MLK and Canfield	0 (0)	1 (0)	1 (0)	0(0)	0 (0)	0 (0)
Cass, Temple and MLK/Mack	1 (0)	1 (0)	2 (0)	7(7)	6 (1)	13 (8)
John R, I-75 to MLK/Mack	7 (3)	1 (0)	8 (3)	4 (4)	7 (4)	11 (8)
John R, Mack to Canfield	2 (2)	1 (1)	3 (3)	1 (0)	9 (3)	10 (3)
John R, Canfield to Warren	5 (3)	0	5 (3)	8 (4)	5 (4)	13 (8)
John R, Warren to Ferry	0 (0)	14 (9)	14 (9)	0 (0)	7 (5)	7 (5)
Total	**79 (43)**	**67 (40)**	**146 (83)**	**119 (92)**	**135 (99)**	**254 (191)**

Source: Parsons Brinckerhoff, 2010
NOTE: # (#) = Total number of bicyclists (number riding on sidewalk or in wrong direction)

3.2.3 Non-Motorized Safety

Between 2005 and 2008, there were 172 crashes along Woodward Avenue involving vehicles and either pedestrians (145 crashes) or bicyclists (27 crashes). There were eight fatal crashes on Woodward Avenue; seven involved pedestrians and one involved a bicyclist. Of the eight fatal crashes, two occurred at signalized intersections and six at midblock locations (Figure 3-5):

- Woodward Avenue and Larned Street
- Midblock north of Clairmount Street
- Woodward Avenue and Chicago/Arden Park Boulevards
- Midblock between Calvert Street and Webb Street (3 fatalities)
- Midblock north of Manchester Road.
- Midblock north of McNichols Road

The bicycle fatality at the intersection of Woodward Avenue and Chicago/Arden Park Boulevards involved a bicyclist crossing against the light and involved a fire truck. The six pedestrian fatalities all involved jaywalking pedestrians who were attempting to cross outside of a crosswalk. Four of the six pedestrians were found to be intoxicated at the time of their crashes.

Between 2005 and 2008, there were 20 crashes involving pedestrians and vehicles that resulted in incapacitating injuries (A-injury) and one crash involving a bicycle and a vehicle that resulted in an incapacitating injury. The A-injury bicycle crash was between a left-turning vehicle and a bicyclist traveling in the crosswalk. Of the 20 A-injury pedestrian crashes, 10 involved pedestrians crossing the street outside of a crosswalk. Four were the result of pedestrians crossing in a crosswalk against the light. Two crashes involved intoxicated pedestrians, and at least two involved a drunk driver.

Overall, there were 38 crashes (26 percent of the total) involving pedestrians and vehicles that occurred outside the 250-foot signalized intersection area, indicating that jaywalking pedestrians may be at risk. There were also 13 vehicle/bicycle crashes (48 percent of the total) in locations between signalized intersections. There are no data available on bicycle/pedestrian crashes.

3.3 Motor Vehicle Safety

A crash analysis was performed for each of the 75 signalized intersections within the study corridor. Crash data were obtained from SEMCOG for the years 2005 through 2008. The number of crashes for each signalized intersection was determined based on a 250-foot radius around each intersection.

To identify critical crash locations, two different methods were used: the Crash Frequency Method and the Crash Rate Method. The Crash Frequency Method ranks locations by descending crash frequency; crash frequency is the average number of accidents per year. This method does not account for the differing amounts of traffic at the locations compared and tends to rank a high-volume location as a high-crash location, even if the location has a relatively low number of crashes compared to its traffic volume. The Crash Frequency Method is used mainly to select an initial list of locations suspected of having a crash problem, after which the crash histories of the listed locations are evaluated in detail using other methods.

The Crash Rate Method ranks locations by descending crash rate; crash rate is the average number of crashes per volume of traffic per year. This method compares the number of crashes to the volume of traffic, with the latter measured either as the number of vehicles crossing a spot in a given time period, or as the number of vehicle miles traveled along a segment in that period. This method is less likely to identify locations incorrectly based on high traffic volumes. The Crash Rate Method tends to identify low-volume locations having relatively few crashes unfairly as high-crash locations.

The crash rate for each intersection was determined by using the following formula:

$$Crash\ Rate = \frac{Number\ of\ Crashes\ x\ 1{,}000{,}000}{365\ x\ Average\ Daily\ Traffic\ x\ Number\ of\ Years}$$

Daily approach volumes were available only for some locations. Based on this information, the evening peak-hour volumes were determined to be approximately 9 percent of the 24-hour intersection volumes. Therefore, intersection average daily traffic (ADT) was determined for

each intersection by using the traffic volume entering the intersection in the evening peak hour and dividing by 0.09.

Table 3-4 summarizes the number of crashes per year for each intersection, the intersection ADT, the average crash frequency, and the average crash rate.

Figure 3-5. Fatal and A-Injury Crash Locations (2005-2008)

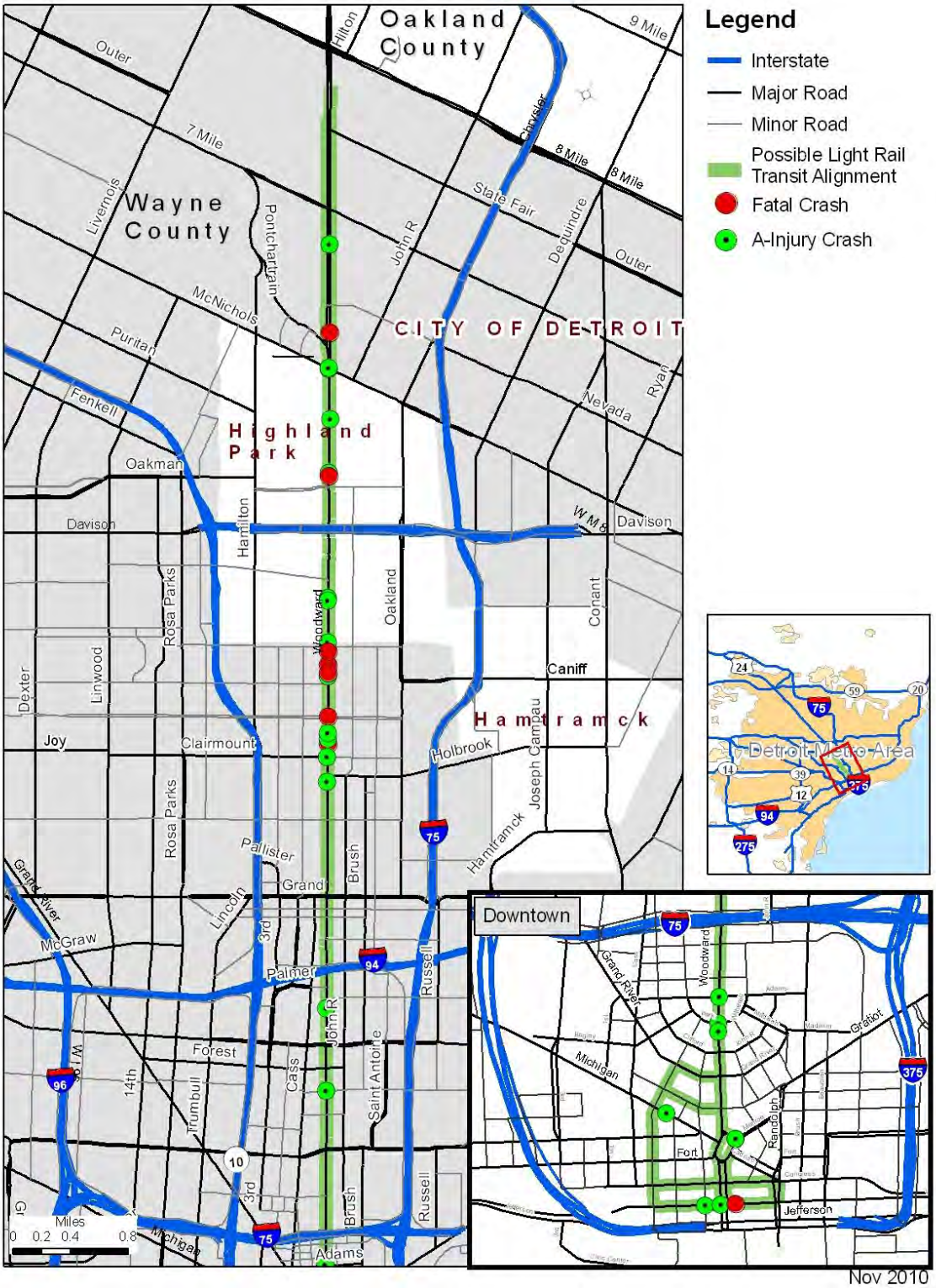

Source: SEMCOG and Parsons Brinckerhoff, 2010

Table 3-4. Intersection Crash Frequencies and Rates

Intersection	2005	2006	2007	2008	Average Crash Frequency	Intersection ADT	Average Crash Rate
Larned & Randolph	11	22	14	10	14	18,920	2.06
Larned & Griswold	15	5	13	10	11	18,470	1.59
Larned & Shelby	4	6	2	9	5	16,520	0.87
Larned & Washington	10	11	12	11	11	23,440	1.29
Congress & Randolph	9	8	5	7	7	13,740	1.45
Congress & Bates	2	4	4	2	3	8,890	0.92
Congress & Griswold	8	10	10	10	10	14,770	1.76
Congress & Shelby	8	4	13	11	9	8,120	3.04
Congress & Washington	15	3	6	10	9	13,470	1.73
Fort & Washington	1	3	3	12	5	15,430	0.84
Lafayette & Washington	0	0	2	2	1	7,680	0.36
Michigan & Washington	2	8	5	12	7	15,310	1.21
State & Griswold	3	3	2	3	3	6,460	1.17
State & Washington	3	1	1	4	2	6,340	0.97
Grand River & Griswold	2	2	7	2	3	5,470	1.63
Grand River & Washington	5	9	2	4	5	8,480	1.62
Woodward & Larned	8	20	7	4	10	23,100	1.16
Woodward & Congress	9	10	18	10	12	16,240	1.98
Woodward & North Campus Martius	0	4	3	2	2	15,500	0.40
Woodward & Michigan	6	4	7	4	5	14,500	0.99
Woodward & Fort Street	0	4	4	10	5	11,100	1.11
Woodward and South Campus Martius	0	3	1	3	2	14,500	0.33
Woodward & Cadillac Square	4	3	4	6	4	10,400	1.12
Woodward & Monroe	7	7	12	11	9	12,900	1.96
Woodward & State/Gratiot	4	10	6	6	7	14,840	1.20
Woodward & Grand River	12	12	10	11	11	15,830	1.95
Woodward & John R	5	7	7	4	6	14,010	1.12
Woodward & Park	3	11	4	6	6	17,740	0.93
Woodward & Adams	12	3	5	3	6	17,120	0.92
Woodward & Elizabeth	5	8	6	7	7	16,510	1.08
Woodward & Montcalm	8	10	8	6	8	18,080	1.21
Woodward & NB I-75	11	6	6	2	6	19,800	0.86
Woodward & SB I-75	11	13	16	9	12	20,560	1.63
Woodward & Sibley/Adelaide	3	8	2	3	4	17,940	0.61
Woodward & Charlotte	5	1	2	4	3	18,740	0.44
Woodward & Peterboro/Erskine	8	8	3	4	6	20,040	0.79
Woodward & MLK Jr. /Mack	17	20	27	25	22	32,530	1.87
Woodward & Parsons	8	4	6	5	6	26,160	0.60

Table 3-4. Intersection Crash Frequencies and Rates

Intersection	2005	2006	2007	2008	Average Crash Frequency	Intersection ADT	Average Crash Rate
Woodward & Alexandrine	10	8	19	6	11	29,230	1.01
Woodward & Canfield	8	11	14	12	11	31,390	0.98
Woodward & Forest	12	8	5	15	10	32,670	0.84
Woodward & Warren	30	39	44	33	37	42,070	2.38
Woodward & Putnam	6	5	8	7	7	31,240	0.57
Woodward & Kirby	12	8	3	3	7	31,010	0.57
Woodward & Palmer	9	6	11	15	10	32,770	0.86
Woodward & Antoinette/Medbury	8	5	3	4	5	33,120	0.41
Woodward & Milwaukee	6	8	6	8	7	33,840	0.57
Woodward & Baltimore	4	8	14	9	9	31,470	0.76
Woodward & Grand Blvd	21	16	22	12	18	36,830	1.32
Woodward & Bethune	5	6	13	6	8	28,840	0.71
Woodward & Seward/Marston	3	10	9	5	7	26,670	0.69
Woodward & Euclid	8	8	18	7	10	26,380	1.06
Woodward & Hazelwood/Holbrook	7	9	5	13	9	24,300	0.96
Woodward & Clairmount/Owen	6	15	15	11	12	27,200	1.18
Woodward & Chicago/Arden Park	3	4	6	9	6	25,230	0.60
Woodward & Calvert/Trowbridge	3	4	7	6	5	24,060	0.57
Woodward & Tuxedo/Tennyson	3	4	4	1	3	25,640	0.32
Woodward & Cortland	5	4	9	1	5	26,580	0.49
Woodward & Glendale/McLean	9	7	11	2	7	27,380	0.73
Woodward & Buena Vista	3	3	12	0	5	27,320	0.45
Woodward & EB M-8	13	8	11	3	9	34,590	0.69
Woodward & WB M-8	5	2	2	0	2	33,140	0.19
Woodward & Grand St	3	4	2	0	2	30,680	0.20
Woodward & Gerald	3	5	2	0	3	28,310	0.24
Woodward & Manchester	3	9	15	1	7	33,080	0.58
Woodward & Sears	4	7	5	0	4	28,070	0.39
Woodward & Ferris/Pilgrim	8	3	11	0	6	28,740	0.52
Woodward & McNichols	25	13	17	12	17	37,070	1.24
Woodward & Merrill Plaisance	3	6	3	5	4	13,180	0.88
Woodward & Nevada	3	3	7	4	4	27,140	0.43
Woodward & Grixdale	1	1	0	5	2	26,510	0.18

Table 3-4. Intersection Crash Frequencies and Rates

Intersection	2005	2006	2007	2008	Average Crash Frequency	Intersection ADT	Average Crash Rate
Woodward & Crossover south of 7 Mile	3	3	2	2	3	19,560	0.35
Woodward & 7 Mile	32	16	32	20	25	41,170	1.66
Woodward & Crossover north of 7 Mile	0	0	1	0	0	11,200	0.06
Woodward & State Fair	9	18	15	5	12	28,060	1.15

Source: SEMCOG, 2009

The *SEMCOG Traffic Safety Manual, Second Edition*, was used to determine critical crash locations within the study area. Table 3-4 of the Manual details the critical crash rate and frequency for the southeast Michigan region (Table 3-5). The regional critical crash rate and frequency are defined as the value of the rate or frequency that is considered sufficiently high based on a sample of crashes within a region. Using the regional critical crash rates and frequencies, there are two signalized intersections along the study corridor that are considered critical: Woodward Avenue at Warren Avenue and Woodward Avenue at MLK Jr. Boulevard/Mack Avenue. For each of these intersections, the types of crashes were reviewed to determine the reasons for the critical rate.

Table 3-5. SEMCOG Regional Crash Rates and Frequencies

Average Daily Traffic Volume Entering Intersection	Average Crash Rate	Critical Crash Rate	Average Crash Frequency	Critical Crash Frequency
1 – 10,000	6.13	8.88	6.42	11.31
10,001 – 20,000	1.70	2.70	9.38	16.56
20,001 – 30,000	1.43	2.13	12.95	23.54
30,001 – 40,000	1.21	1.75	15.38	26.69
40,001 – 50,000	1.14	1.60	18.52	33.62

Source: SEMCOG, *Traffic Safety Manual, Second Edition,* 1997

The definitions of the crash types used in the UD-10 crash reporting form are taken directly from the *State of Michigan UD-10 Traffic Crash Report Manual*. The manual was produced and distributed by the Michigan Department of State Police, and the Office of Highway Safety Planning. The definitions of crash types are based on the intended direction of travel, regardless of points(s) of impact or direction that vehicles ultimately face after the crash. The following are the defined crash types:

- Single Motor Vehicle: This is a single- or multiple-unit crash, which involves only one motor vehicle. This includes cases in which a motor vehicle was: 1) the only traffic unit; and 2) the only motor vehicle involved that collided with a bicyclist, pedestrian, animal, railroad train, or other non-motorized object. Any motorized (e.g., self-propelled) vehicle or device is considered a "motor vehicle" even though the vehicle or device may not be

defined as a motor vehicle in the Michigan Motor Vehicle Code or other applicable legislation.

- Head On: The intended direction of travel of both vehicles is towards each other. The directions that the vehicles are facing when they come to rest and the points of impact on the vehicles are not the determining factors.
- Angle: A crash is marked as an angle crash when the intended direction of travel is perpendicular for both vehicles and there is a side impact of approximately 90 degrees. If the side impact takes place during a head-on left turn, rear-end left turn, or rear-end right turn, it is not an angle crash.
- Rear End: A rear-end crash occurs when the vehicles are traveling in the same direction, one behind the other, and no turn is involved. The area of damage on the vehicles is not the determining factor. Any crash involving a vehicle backing into another is not considered a rear-end crash.
- Sideswipe: Vehicles traveling in the same direction, or vehicles traveling in opposite directions, making side contact are considered a sideswipe crash. If a vehicle spins out of control and makes contact with another vehicle traveling in the same direction, it is a sideswipe crash. Sideswipe crashes differ from angle crashes. A sideswipe is a glancing impact and should not in itself stop the forward movement of the vehicle. An angle crash is a more direct impact and may stop the forward movement of one vehicle.
- Other/Unknown: The crash does not fit in one of the other crash type definitions.

Table 3-6 summarizes the types of crashes at the two critical crash locations.

Table 3-6. Number and Percent of Crash Types at Critical Crash Locations

Intersection	Single Vehicle	Head-on and Sideswipe Opposite	Head-on Left-turn and Rear-end Left-turn	Angle	Rear-end and Sideswipe Same	Other	Total Crashes
Woodward & MLK Jr./Mack	2 / 2%	8 / 9%	9 / 10%	27 / 30%	35 / 39%	8 / 9%	89
Woodward & MLK Jr./Mack (adjusted)*	2 / 2%	8 / 9%	18 / 20%	18 / 20%	35 / 39%	8 / 9%	89
Woodward & Warren	9 / 6%	8 / 5%	13 / 9%	45 / 31%	61 / 42%	10 / 7%	146
Woodward & Warren (adjusted)*	9 / 6%	8 / 5%	40 / 27%	18 / 12%	61 / 42%	10 / 7%	146

Source: SEMCOG, 2009
*See discussion below regarding miscoding of angle and head-on left-turn crashes.

Table 3-7 summarizes the SEMCOG average regional crash rate percentages for southeast Michigan. Comparing the average percentages (Table 3-7) and the intersection percentages (Table 3-6), the percentage of angle crashes and head-on left-turn/rear-end left-turn crashes are high at both intersections.

Table 3-7. SEMCOG Regional Crash Type Percentages

Average Daily Traffic Volume Entering Intersection	Single Vehicle	Head-on and Sideswipe Opposite	Head-on Left-turn and Rear-end Left-turn	Angle	Rear-end and Sideswipe Same	Other
30,001 – 40,000	10.1%	7.4%	6.8%	17.7%	45.6%	12.6%
40,001 – 50,000	11.8%	3.4%	3.0%	24.0%	48.5%	9.2%

Source: SEMCOG, Table 4-4 of the *SEMCOG Traffic Safety Manual, Second Edition*. 1997.

Woodward Avenue and MLK Jr. Boulevard/Mack Avenue

The percentages of head-on left-turn crashes, head-on, angle, and sideswipe opposite crashes are high at the intersection of Woodward Avenue and MLK Jr. Boulevard/Mack Avenue. Occasionally, angle crashes are miscoded in the UD-10 report and are actually head-on left-turn crashes. The UD-10 reports for the head-on left-turn crashes and the angle crashes at this intersection were reviewed for more information. Of the 27 angle crashes, nine were actually head-on left-turn crashes that had been miscoded. Adjusting the crash type percentage to take this into account indicates that 20 percent of the crashes at this intersection were angle crashes, and 20 percent were head-on left-turn crashes (Table 3-6).

Fourteen of the 18 head-on left-turn crashes were between eastbound and westbound vehicles on MLK Jr. Boulevard/Mack Avenue. Mitigation measures can include adding an exclusive left-turn lane, adding left-turn phasing, lining up off-set left-turn lanes, or prohibiting left-turn maneuvers.

The percentage of angle crashes was still higher than the regional rate (Table 3-7) after the miscoded head-on left-turn crashes were removed. The UD-10 reports that a number of the angle crashes attributed to the intersection actually occurred at the crossover/driveway located 200 feet east of the intersection. Mitigation measures for angle crashes can include increasing the yellow or all-red clearance intervals, and improving intersection sight distance.

Woodward Avenue and Warren Avenue

The Woodward Avenue and Warren Avenue intersection has a high percentage of head-on and sideswipe opposite crashes, head-on left-turn and rear-end left-turn crashes, and angle crashes. The UD-10 reports for the head-on left-turn crashes and the angle crashes at this intersection were reviewed for more information. Of the 45 angle crashes, 27 were actually head-on left-turn crashes that had been miscoded. Adjusting the crash type percentages to take this into account indicates that only 12 percent of the crashes at this intersection were angle crashes, and 27 percent were head-on left-turn crashes (Table 3-6). The percentage of angle crashes was below the regional rate (Table 3-7).

Twenty-eight of the 40 head-on left-turn crashes were between eastbound and westbound vehicles on Warren Avenue. Mitigation measures for head-on left-turn crashes can include adding left-turn phasing, lining up off-set left-turn lanes, or prohibiting left-turn maneuvers.

Intersection Crash Severity

The definitions of the injury severity classification used in the UD-10 forms are taken directly from the *State of Michigan UD-10 Traffic Crash Report Manual*.

1. Fatal Injury (F): Any injury that results in death due to a motor vehicle traffic crash.
2. Incapacitating Injury (A): Any injury, other than fatal, which prevents the injured person from walking, driving, or normally continuing the activities which he or she was capable of performing prior to the motor vehicle traffic crash.
3. Non-incapacitating Evident Injury (B): Any injury, other than fatal and incapacitating, which is evident at the scene of the crash.
4. Possible Injury (C): Any injury reported or claimed, which is not a fatal, incapacitating, or non-incapacitating evident injury.

All other crashes are considered property-damage only (PDO). For each intersection, an equivalent property damage only (EPDO) rate was calculated. This was determined using the following formula:

$$EPDO = 9.5 * (F + A) + 3.5 * (B + C) + PDO$$

A critical EPDO rate was calculated using the EPDO of all signalized intersections within the study corridor using the method detailed in the *SEMCOG Traffic Safety Manual, Second Edition*. The critical rate was found to be 2.0 or higher.

Table 3-8 summarizes the severity of crashes at each of the signalized intersections.

Table 3-8. Crash Severity at Signalized Intersections

Intersection	F	A	B	C	PDO	EPDO	EPDO / Total Crashes
Larned & Randolph	0	2	3	6	46	96.5	1.69
Larned & Griswold	0	1	0	8	34	71.5	1.66
Larned & Shelby	0	0	0	2	19	26	1.24
Larned & Washington	0	1	3	5	35	72.5	1.65
Congress & Randolph	0	0	0	3	26	36.5	1.26
Congress & Bates	0	0	0	1	11	14.5	1.21
Congress & Griswold	0	1	0	2	35	51.5	1.36
Congress & Shelby	0	0	0	2	34	41	1.14
Congress & Washington	0	0	4	2	28	49	1.44
Fort & Washington	0	0	0	3	16	26.5	1.39
Lafayette & Washington	0	0	1	1	2	9	2.25
Michigan & Washington	0	1	1	1	24	40.5	1.50
State & Griswold	0	0	0	2	9	16	1.45
State & Washington	0	0	2	1	6	16.5	1.83
Grand River & Griswold	0	0	0	0	13	13	1.00
Grand River & Washington	0	0	1	3	16	30	1.50
Woodward & Larned	**1**	1	2	7	28	78.5	2.01
Woodward & Congress	0	0	0	8	39	67	1.43
Woodward & North Campus Martius	0	0	1	1	7	9	1.56

Table 3-8. Crash Severity at Signalized Intersections

Intersection	F	A	B	C	PDO	EPDO	EPDO / Total Crashes
Woodward & Michigan	0	0	0	0	21	21	1.00
Woodward & Fort Street	0	0	0	0	18	18	1.00
Woodward and South Campus Martius	0	0	0	0	7	7	1.00
Woodward & Cadillac Square	0	1	0	2	14	17	1.79
Woodward & Monroe	0	2	0	0	35	37	1.46
Woodward & State/Gratiot	0	0	1	1	24	31	1.19
Woodward & Grand River	0	0	1	6	38	62.5	1.39
Woodward & John R	0	0	2	1	20	30.5	1.33
Woodward & Park	0	2	1	2	19	48.5	2.02
Woodward & Adams	0	1	0	3	19	39	1.70
Woodward & Elizabeth	0	0	0	2	24	31	1.19
Woodward & Montcalm	0	0	4	3	25	49.5	1.55
Woodward & NB I-75	0	0	1	3	21	35	1.40
Woodward & SB I-75	0	0	3	5	41	69	1.41
Woodward & Sibley/Adelaide	0	0	1	0	15	18.5	1.16
Woodward & Charlotte	0	0	0	2	10	17	1.42
Woodward & Peterboro/Erskine	0	1	0	4	18	41.5	1.80
Woodward & MLK Jr. /Mack	0	1	1	14	73	135	1.52
Woodward & Parsons	0	0	1	3	19	33	1.43
Woodward & Alexandrine	0	0	0	8	35	63	1.47
Woodward & Canfield	0	1	1	3	40	63.5	1.41
Woodward & Forest	0	0	0	5	35	52.5	1.31
Woodward & Warren	0	1	6	16	123	209.5	1.43
Woodward & Putnam	0	1	1	0	24	37	1.42
Woodward & Kirby	0	2	0	2	22	48	1.85
Woodward & Palmer	0	0	1	3	37	51	1.24
Woodward & Antoinette/Medbury	0	0	0	3	17	27.5	1.38
Woodward & Milwaukee	0	0	2	4	22	43	1.54
Woodward & Baltimore	0	0	0	4	31	45	1.29
Woodward & Grand Blvd	0	2	1	14	54	125.5	1.77
Woodward & Bethune	0	1	4	5	20	61	2.03
Woodward & Seward/Marston	0	0	2	4	21	42	1.56
Woodward & Euclid	0	0	2	4	35	56	1.37
Woodward & Hazelwood/Holbrook	0	1	2	5	26	60	1.76
Woodward & Clairmount/Owen	0	1	2	7	37	78	1.66
Woodward & Chicago/Arden Park	**1**	0	1	4	16	43	1.95
Woodward & Calvert/Trowbridge	0	1	0	4	15	38.5	1.93
Woodward & Tuxedo/Tennyson	0	2	0	3	7	36.5	3.04
Woodward & Cortland	0	2	1	4	12	48.5	2.55
Woodward & Glendale/McLean	0	2	3	7	17	71	2.45
Woodward & Buena Vista	0	0	0	2	16	23	1.28
Woodward & Eastbound M-8 Service Drive	0	1	2	13	19	81	2.31

Table 3-8. Crash Severity at Signalized Intersections

Intersection	F	A	B	C	PDO	EPDO	EPDO / Total Crashes
Woodward & Westbound M-8 Service Drive	0	0	0	1	8	11.5	1.28
Woodward & Grand St	0	0	1	0	8	11.5	1.28
Woodward & Gerald	0	0	0	0	10	10	1.00
Woodward & Manchester	0	0	3	7	18	53	1.89
Woodward & Sears	0	0	0	3	13	23.5	1.47
Woodward & Ferris/Pilgrim	0	1	2	2	17	40.5	1.84
Woodward & McNichols	0	2	2	7	56	106.5	1.59
Woodward & Merrill Plaisance	0	0	2	1	14	24.5	1.44
Woodward & Nevada	0	0	0	4	13	27	1.59
Woodward & Grixdale	0	0	0	2	5	12	1.71
Woodward & Crossover south of 7 Mile	0	1	0	1	8	21	2.10
Woodward & 7 Mile	0	1	6	19	74	171	1.71
Woodward & Crossover north of 7 Mile	0	0	0	1	0	3.5	3.50
Woodward & State Fair	0	1	2	12	32	90.5	1.93
Total Crashes	**2**	**39**	**83**	**293**	**1846**	**3552**	**1.92**

Source: SEMCOG, 2009

There were two fatal crashes at signalized intersections within the study corridor between 2005 and 2008. Both crashes involved pedestrians. One location was at Woodward and Chicago/Arden Park and the second was at Woodward Avenue and Larned Street in Downtown Detroit. These fatalities are discussed in more detail in Section 3.2.3.

There are 10 locations where the EPDO divided by the total number of crashes exceeded the value of 2.0. These locations are highlighted in Table 3-8 and are summarized below:

- Washington Boulevard and Lafayette Street
  - There were four crashes at this location in four years: one was a "B" type crash in 2007. This is not significant enough to warrant a high severity rating.
- Woodward Avenue and Larned Street
  - There were 39 crashes at this location in four years: one fatality, one an "A" type crash and two "B" type crashes, all involving pedestrians. The fatal crash occurred in 2008, the "A" type crash occurred in 2005, and the two "B" type crashes occurred in 2006 and 2007.
- Woodward Avenue and Park Street
  - There were 24 crashes at this location in four years, with two "A" type crashes and one a "B" type crash, all involving pedestrians with a single vehicle. One "A" type crash occurred in 2006 and a second in 2007. The "B" type crash occurred in 2008.
- Woodward Avenue and Bethune Avenue

- There were 30 crashes at this location in four years, with one an "A" type crash and four "B" type crashes. The one "A" type crash occurred in 2008 and was a rear-end crash. Two "B" type crashes occurred in 2006; one was an angle crash and one was a rear-end crash. Two other "B" type crashes occurred in 2008; one was an angle crash the other involved a bicyclist.

- Woodward Avenue and Tuxedo Street/Tennyson Street
  - There were 12 crashes at this location in four years, with two "A" type crashes. One of the "A" type crashes occurred in 2005 and was a rear-end crash; the second occurred in 2006 and was a single-vehicle crash.
- Woodward Avenue and Cortland Street
  - There were 19 crashes at this location in four years, with two "A" type crashes and one a "B" type crash. Both of the "A" type crashes occurred in 2005 and involved one motor vehicle. The "B" type crash occurred in 2006 and was a rear-end crash.
- Woodward Avenue and Glendale Street/McLean Street
  - There were 29 crashes at this location in four years, with two "A" type crashes and three "B" type crashes. One "A" type crash occurred in 2005 and one in 2006; both involved one motor vehicle. The "B" type crashes occurred in 2005, 2006 and 2007 and included one head-on left-turn crash, one side-swipe opposite crash and one angle crash.
- Woodward Avenue and Eastbound M-8 Service Drive
  - There were 35 crashes at this location in four years, with one an "A" type crash and two "B" type crashes. The "A" type crash was an angle crash. The two "B" type crashes included on angle crash and one single-vehicle crash involving a pedestrian. These three crashes occurred in 2005 and 2006.
- Woodward Avenue and Crossover south of 7 Mile Road
  - There were 10 crashes at this location in four years, with one an "A" type crash and another a "C" type crash. This is not significant enough to warrant a high severity rate.
- Woodward Avenue and Crossover north of 7 Mile Road
  - There was one crash at this location in four years, which was coded a "C" type crash. This is not significant enough to warrant a high severity rate.

There were 2,263 crashes along the study corridor at signalized intersections, of which 82 percent were property damage only, 13 percent were "C" type crashes, 4 percent were "B" type crashes and 2 percent were "A" type or fatal crashes. Of the "B", "A" and fatal crashes, 36 percent involved a pedestrian or bicyclist and 20 percent were angle crashes. Pedestrian and bicyclist safety are discussed in more detail in Section 3.2.

3.3.1 Segment Crashes

From 2005 to 2008, there were 558 segment crashes within the study corridor, averaging 140 segment crashes per year. Table 3-9 summarizes the type of crashes by year, as well as the number of fatal or severe injury type crashes ("A" or "B" type).

Table 3-9. Segment Crashes by Year (2005 - 2008)

Crash Type	2005	2006	2007	2008	Total
Single Vehicle	22 (2F, 2A, 2B)	21 (A, 3B)	19 (3F, 1A, 2B)	10 (1F)	73 (6F, 4A, 7B)
Head-on	5 (2A, 1B)	8 (1A, 1B)	3	2 (1A)	18 (4A, 2B)
Head-on Left-turn	3	1	7 (2B)	2	13 (2B)
Angle	44 (3B)	39 (1A, 5B)	35 (2B)	24 (1A)	142 (2A, 5B)
Rear-end	43 (1A)	32 (1B)	42	21	138 (1A, 1B)
Sideswipe Same	23	21 (1B)	21 (1B)	25 (1A)	90 (1A, 2B)
Sideswipe Opposite	9	8	13	3 (1B)	33 (1B)
Other/Uncoded	17 (1A, 1B)	14 (1A, 1B)	13 (1B)	8 (1B)	52 (2A, 4B)
Total	166	144	153	95	559

Source: SEMCOG, 2009
* (#F, #A, #B) = (Number of "A" crashes, Number of "B" crashes, Number of "C" crashes)

The highest crash types were angle crashes that occurred at unsignalized intersections; those account for 25 percent of the crashes. Another 25 percent of crashes were rear-end crashes. Sixteen percent of crashes were sideswipe-same crashes and 13 percent were single-vehicle crashes. Approximately half of the single-vehicle crashes on segments involved a pedestrian or bicyclist, with a total of 38 segment crashes involving a pedestrian.

Of the six fatal crashes that occurred on segments within the study corridor, all were a single-vehicle crash involving a pedestrian. Five of the 14 "A" type crashes involved a pedestrian and seven of the 29 "B" type crashes involved a pedestrian. Pedestrian safety is discussed in more detail in Section 3.2; Figure 3-5 shows the locations of the fatal crashes.

3.4 Parking

This section summarizes the existing metered and non-metered parking within the study corridor. The Project area was broken into the several sections. Table 3-10 summarizes the existing parking spaces along the proposed light rail alignment.

Table 3-10. Estimated Parking Spaces (2009)

Section	Metered/Non-Metered Parking Spaces by Direction*		TOTAL Metered/Non-Metered Spaces (Total)
East-West Roadways	**EB**	**WB**	
Larned between Washington and Griswold	12 / 0	-	12 / 0 (12)
Larned between Griswold and Randolph	0 / 0	-	0 / 0 (0)
Randolph between Congress and Larned	5 / 0	9 / 0	14 / 0 (14)
Congress between Randolph and Bates	-	0 / 3	0 / 3 (3)
Congress between Bates and Griswold	-	0 / 0	0 / 0 (0)
Congress between Griswold and Washington	-	17 / 0	17 / 0 (17)
State between Woodward and Washington	-	0 / 0	0 / 0 (0)
Grand River between Woodward and Washington	7 / 0	-	7 / 0 (7)
North-South Roadways	**NB**	**SB**	
Washington between Grand River and State	17 / 0	23 / 0	40 / 0 (40)
Washington between State and Michigan	8 / 0	7 / 0	15 / 0 (50)
Washington between Michigan and Larned	0 / 0	2 / 0	2 / 0 (2)
Woodward between Larned and Campus Martius	3 / 0	0 / 0	3 / 0 (3)
Woodward between Campus Martius and State	6 /0	0 / 0	6 / 0 (6)
Woodward between State and Grand River	8 / 0	0 / 0	8 / 0 (8)
Woodward between Grand River and Adams	10 / 0	0 / 0	10/0 (10)
Woodward between Adams and I-75	0 / 0	0 / 0	0 / 0 (0)
Woodward between I-75 and Alexandrine	11 / 45	15 / 66	26 / 111 (137)
Woodward between Alexandrine and Kirby	22 / 49	44 / 30	66 / 79 (145)
Woodward between Kirby and Grand	32 / 19	36 / 27	68 / 46 (114)
Woodward between Grand and Clairmount	2 / 58	0 / 66	2 / 124 (126)
Woodward between Clairmount and McLean	0 / 96	0 / 91	0 / 187 (187)
Woodward between McLean and Sears	0 / 43	0 / 38	0 / 81 (81)

Section	Metered/Non-Metered Parking Spaces by Direction*		TOTAL Metered/Non-
Woodward between Sears and McNichols	0 / 25	0 / 23	0 / 48 (48)
Woodward between McNichols and 7 Mile	0 / 56	0 / 42	0 / 98 (98)
Woodward between 7 Mile and 8 Mile	0 / 27	0 / 0	0 / 27 (27)
TOTAL	**134 / 418**	**153 / 386**	**287 / 804 (1,091)**

Source: Parsons Brinckerhoff, 2009
*Metered/Non-Metered (based on 20 feet per space), NB=Northbound, SB=Southbound, EB= Eastbound, WB=Westbound

3.4.1 Parking Revenue

Table 3-11 summarizes the approximate revenue generated from metered parking within the study corridor. The revenue includes money collected from meters and money collected for parking tickets as part of parking enforcement. The estimated revenue information was provided by the City of Detroit Municipal Parking Department. An approximate revenue per meter per day was provided for each street segment. For enforcement revenue, ticket information was provided for a one-year period and was averaged to a daily rate. The cost of parking tickets ranged from parking at an expired meter, which has a lower fine, to parking in a no parking zone, which has a higher fine.

Table 3-11. Estimated Daily Parking Revenue (2009)

Section	Meters	Enforcement	Total
Larned between Washington and Griswold	$228	$155	$383
Larned between Griswold and Randolph	-	$142	$142
Randolph between Congress and Larned	$336	$258	$594
Congress between Randolph and Bates	-	$17	$17
Congress between Bates and Griswold	-	$16	$16
Congress between Griswold and Washington	$323	$375	$698
Washington between Grand River and State	$400	$88	$488
Washington between State and Michigan	$140	$28	$168
Washington between Michigan and Larned	$38	$94	$132
State between Woodward and Washington	-	$25	$25
Grand River between Woodward and Washington	$70	$49	$119
Woodward between Larned and Campus Martius	$57	$37	$94
Woodward at Campus Martius	-	$2	$2
Woodward between Campus Martius and State	$102	$47	$149
Woodward between State and Grand River	$136	$39	$175
Woodward between Grand River and Adams	$170	$50	$220
Woodward between Adams and I-75	-	$8	$8
Woodward between I-75 and Alexandrine	$432	$165	$597
Woodward between Alexandrine and Kirby	$1,157	$281	$1,438
Woodward between Kirby and Grand	$1,076	$230	$1,306
Woodward between Grand and Clairmount	$26	$55	$81
Woodward between Clairmount and McLean	-	$14	$14

Section	Meters	Enforcement	Total
Woodward between McLean and Sears	-	$0	$0
Woodward between Sears and McNichols	-	$1	$1
Woodward between McNichols and 7 Mile	-	$11	$11
Woodward between 7 Mile and 8 Mile	-	$3	$3
Total	**$4,691**	**$2,190**	**$6,881**

Source: City of Detroit Municipal Parking Department, 2009

Along Randolph Street, there are 14 metered parking spaces between Larned Street and Congress Street. These have a one-hour time limit and charge $1 per hour. The average daily revenue collected from these metered parking spaces is $24.

There are 12 metered parking spaces located along Larned Street between Griswold Street and Washington Boulevard. These are one-hour parking meters and charge $1 per hour. The average daily revenue collected from these metered parking spaces is $19.

There are 17 metered parking spaces located along Congress Street between Griswold Street and Washington Boulevard. These are one-hour parking meters and charge $1 per hour. The average daily revenue collected from these metered parking spaces is $19. There are also three parking spaces along Congress Street between Randolph and Bates Streets that allowed for one-hour parking.

Along Washington Boulevard, there are 55 metered parking spaces between Grand River Avenue and Michigan Avenue. These locations have a two-hour time limit and charge $1 per hour to park. The average daily revenue collected from these metered parking spaces is $10 north of Michigan Avenue and $19 south of Michigan Avenue.

There are seven metered parking spaces located along Grand River Avenue between Washington Boulevard and Woodward Avenue. Three of these metered spaces are two-hour parking and four are one-hour parking. The average daily revenue collected from these metered parking spaces is $10.

Parking along Woodward Avenue within Downtown Detroit is generally two-hour parking. North of Downtown, there are 178 existing metered parking spaces located along Woodward Avenue from State Street to Grand Boulevard. The meters vary between one-hour and two-hour parking. There is also 30-minute parking north of Parsons Street near the Max M. Fisher Theatre. All metered parking is $1 per hour. The average revenue per day per meter ranges from $12 in the Medical Center area, $13 in the New Center area, $17 in Downtown, and $20 near Wayne State University.

The revenue collected in 2009 from parking within the study corridor averaged $6,881 per day. The highest revenue-generating area is along Woodward Avenue between Alexandrine and Kirby Streets, which is in the Wayne State University area. The next highest revenue-generating area is along Woodward Avenue between Kirby Street and Grand Boulevard, which is in the New Center area.

For sections where there are meters, the average daily revenue ranged between $11 per meter per day to $42 per meter per day, with the average being $26 per meter per day.

3.4.2 Parking Utilization

Within Downtown, the percent utilization of metered parking spaces is high on most weekdays, as reported by the Municipal Parking Department. A detailed utilization study of Downtown parking was not available for this report. There is restricted evening peak-period parking along Congress Street between Griswold Street and Washington Boulevard. All other parking within the study corridor, including parking in other portions of Downtown, is not restricted by time of day.

In April 2009, a parking utilization study was performed for two days along Woodward Avenue between Adams and State Fair avenues. The parking survey was performed during the morning peak (7 to 9 a.m.), noon (11 a.m. to 1 p.m.) and evening peak (4 p.m. to 6 p.m.) periods. Table 3-12 summarizes the average parking occupancy along Woodward Avenue for each period.

Table 3-12. Average Parking Occupancy (2009)

Section	Morning Peak Period	Noon Period	Evening Peak Period
Woodward between Adams and I-75	2 / 6 (8)	0 / 6 (6)	0 / 3 (3)
Woodward between I-75 and Alexandrine	9 / 21 (30)	11 / 46 (57)	8 / 36 (44)
Woodward between Alexandrine and Kirby	13 / 13 (26)	23 / 41 (64)	31 / 44 (75)
Woodward between Kirby and Grand	8 / 17 (25)	13 / 18 (31)	23 / 23 (46)
Woodward between Grand and Clairmount	13 / 5 (18)	27 / 13 (40)	29 / 18 (47)
Woodward between Clairmount and McLean	10 / 5 (15)	17 / 10 (27)	22 / 14 (36)
Woodward between McLean and Sears	19 / 2 (21)	32 / 15 (47)	25 / 15 (40)
Woodward between Sears and McNichols	0 / 5 (5)	0 / 8 (8)	1 / 12 (13)
Woodward between McNichols and 7 Mile	9 / 1 (10)	10 / 2 (12)	19 / 4 (23)
Woodward between 7 Mile and 8 Mile	2 / 1 (3)	1 / 0 (1)	4 / 0 (4)
Total	**161**	**293**	**331**

Source: Parsons Brinckerhoff, 2009
X / X = Number of Parked Vehicles on the Northbound / Southbound Side; (X) = Total Parked Vehicles

The highest parking occupancy was found to occur during the evening peak hour, except within the Wayne State University area, which had the highest occupancies during the noon period (Table 3-12). Table 3-13 summarizes parking utilization, that is, the percentage of occupied parking spaces compared to the number of spaces available.

Table 3-13. Parking Utilization (2009)

Section	Morning Peak Period	Noon Period	Evening Peak Period
Woodward between Adams and I-75	NA	NA	NA
Woodward between I-75 and Alexandrine	22%	42%	32%
Woodward between Alexandrine and Kirby	18%	44%	52%
Woodward between Kirby and Grand	22%	27%	40%
Woodward between Grand and Clairmount	14%	32%	37%
Woodward between Clairmount and McLean	8%	14%	19%
Woodward between McLean and Sears	26%	58%	49%
Woodward between Sears and McNichols	10%	17%	27%
Woodward between McNichols and 7 Mile	10%	12%	23%
Woodward between 7 Mile and 8 Mile	11%	4%	15%
Total	**17%**	**30%**	**34%**

Source: Parsons Brinckerhoff, 2009

The areas of highest utilization are near Wayne State University, which is located west of Woodward Avenue and north of Warren Avenue, as well as between McLean and Sears Streets in Highland Park. Overall, the section from McLean Street to Sears Street has the highest parking utilization along Woodward Avenue with 58 percent of the spaces occupied during the noon hour. During the evening rush hour the average utilization for the study corridor was 34 percent.

3.5 Freight Movement

3.5.1 Trucking and Deliveries

According to Michigan Department of Transportation (MDOT) statistics, Woodward Avenue carried between 20,000 and 25,000 vehicles on an average weekday in 2009. Of that, approximately 3.4 percent were commercial vehicles, indicating a volume of 700 to 850 commercial vehicles on an average day that use Woodward Avenue. Currently, the width of the Corridor and geometry of the intersections along Woodward Avenue are such that any heavy vehicle (i.e., a semi-truck or delivery van) can perform all legal turning movements. There are also no on-street delivery restrictions in areas where parking is allowed. In locations where on-street parking exists in front of commercial businesses, delivery vehicles are allowed to use these parking spaces for loading and unloading. In addition, many trucks use the parking lane as a tracking lane for right turns off Woodward Avenue onto side streets. In other words, having an 8 to 10-foot offset from the curb effectively increases the turning radius available to trucks making right turns.

3.5.2 Freight Railroads

Woodward Avenue intersects with three grade-separated rail lines. One is a grade-separated crossing with two tracks owned by Consolidated Rail Corporation (CR) and Canadian National Railway (CN), respectively, just south of Baltimore Avenue. The second line, currently abandoned, is owned by CR and crosses Woodward Avenue between Midland and Bartlett Streets in Highland Park. This line crosses Woodward Avenue via a single one-track bridge.

3.6 Emergency Vehicles

There are a number of hospitals with emergency facilities within the study area including the Henry Ford Health System and the Detroit Medical Center. Neither of the facilities has direct frontage on Woodward Avenue. There are no fire stations that have direct frontage or direct access to Woodward Avenue.

3.7 Traffic Operations

This section summarizes the methodology used to determine the existing roadway conditions within the study corridor as well as the results of the analyses.

3.7.1 Methodology

VISSIM 5.10 software was used for the traffic evaluation. VISSIM is a microsimulation model, i.e., the movements and interactions of individual vehicles are explicitly modeled based on geometric parameters, traffic volumes, vehicle types, intersection control, and driver behavior. VISSIM assesses the roadway network in a dynamic fashion, instead of analyzing each intersection or each roadway segment in isolation. Unlike empirical/analytical analysis tools, with which performance measures can be calculated manually, simulation models function only as a computer analysis tool. Average performance statistics, such as vehicle delay, volume served, flow density and travel time, are measured during the simulation and are influenced by the individual vehicle interactions within the simulation. Furthermore, as a stochastic model, a random number seed guides the assignment of vehicle headways. By varying the random number seed, the model results can also vary with identical inputs. This allows the user to test a number of iterations with the same input values to determine average performance.

VISSIM can provide Measures of Effectiveness (MOEs), such as vehicle delay, travel time, queuing and fuel consumption on a network-wide basis; therefore, the effects of improvements at a single location can be measured throughout the network. This ability makes VISSIM an ideal tool for testing and comparing alternatives to determine the most effective combination of elements in facilitating traffic flow. In addition, the sensitivity of the VISSIM model allows the user to test more subtle changes to the roadway system, such as adjustments in traffic signalization, addition or removal of driveways and access points, changes in bus operations and other changes.

The simulation component of VISSIM is a powerful feature, as it provides a graphical, intuitive representation of traffic flow throughout the Corridor that is simple to visualize and interpret, making it an ideal tool for presentation to non-technical parties. The following describes the elements involved in coding the existing conditions in VISSIM (morning and evening peak hour), as well as a brief summary of the calibration/validation of the model and the existing traffic operations within the study corridor.

Roadway Network and Laneage

The roadway network was modeled atop a scaled aerial photograph that was imported into the VISSIM model as a background image. In addition to the aerial imagery, a field review was conducted of the entire study corridor to verify and collect geometric data; inventory signal equipment, posted speed limits, signage (e.g., no turn on red), and pedestrian facilities; and review operations (to assist in identifying deficiencies and calibration of the simulation model). Appendix A of this report summarizes the existing laneage, as well as the distance between signalized intersections.

Within Downtown Detroit, State Street and Grand River Avenue are one-way pairs with two to three lanes in each direction. Washington Boulevard's cross-section has a 60-foot median and two lanes in each direction north of Michigan Avenue. South of Michigan Avenue, Washington Boulevard has two lanes in each direction with a center left-turn lane at each signalized intersection. Congress and Larned streets are one-way pairs with three to four lanes in each direction. Parking is allowed between Washington Boulevard and Griswold Street on both streets, with some peak-period restrictions. Randolph Street's cross-section has a 20-foot median and three lanes in each direction with parking allowed along the outermost lanes.

Woodward Avenue has three distinct cross-sections between State Street in Downtown Detroit and State Fair Avenue. These three different cross-sections, from south to north in the study corridor, are as follows:

- Woodward Avenue between State Street/Gratiot Avenue and Park Avenue: This section of Woodward Avenue has two lanes in each direction and metered parking in curb cutouts only on the northbound side of the street. Within the VISSIM model, this section was coded as having two lanes in each direction. Signals are typically spaced 350 feet to 450 feet apart.
- Woodward Avenue between Park Avenue and McNichols Road: Woodward Avenue in this section typically has three to four through lanes in each direction and a continuous center left-turn-only lane. Typically, the outside lane in both directions has either unrestricted parking or metered parking, reducing the number of through lanes to either two or three in each direction. Within the VISSIM model, this section was coded as having either two or three through lanes due to parking and bus stops. Signals are spaced between 0.04 miles (215 feet) to 0.30 miles apart.
- Woodward Avenue between McNichols Road and State Fair Avenue: Woodward Avenue has a wide cross-section with a 40-foot median dividing the northbound and southbound lanes of traffic. Direct left-turns are not allowed at any intersection and are essentially completed by doing an indirect left-turn using median cross-overs. Within this section, there are typically five lanes of traffic in each direction, with the outside lane used for unrestricted parking and bus stops. Within the VISSIM model, this section was coded as four through lanes due to the number of buses stopping along Woodward Avenue. Signals are spaced approximately 0.35 miles apart.

The traffic signal controllers were all modeled in VISSIM to match the signal operations provided by MDOT and the City of Detroit. The MDOT signal timings were obtained from various Synchro/SimTraffic models. The models were from recent signal optimization projects that MDOT has conducted. Woodward Avenue south of Adams Street is under the jurisdiction of the City of Detroit. Woodward Avenue (M-1) north of Park Avenue is under the jurisdiction of MDOT. Within Downtown Detroit, Fort Street (M-85) and Randolph Street (M-3) are under the jurisdiction of MDOT. All other roadways within Downtown along the alignment, other than those mentioned above, are under the jurisdiction of the City of Detroit. Timing permits were obtained from the City of Detroit for the signals that are under the City's jurisdiction.

Traffic Volumes

In 2003, MDOT updated the signal timings of all the signalized intersections between Adams Road in Downtown Detroit and 8 Mile Road. The study included collection of turning-

movement counts, a field inventory, and the development of Synchro networks of the Corridor for the morning and evening peak hours. These Synchro networks were then converted to VISSIM networks for a Transit Signal Priority (TSP) study in 2005, using the 2003 volumes. The difference between the Synchro and VISSIM models is that Synchro analyzes only vehicular traffic while VISSIM also takes transit networks into account. In addition, there have been several other MDOT and City of Detroit studies within Downtown Detroit from which turning-movement count data are available, for Randolph Street, Fort Street, and Michigan Avenue.

Turning-movement counts were collected at the following intersections in the morning and evening peakperiods (between the hours of 7 a.m. to 9 a.m. and 3 p.m. to 6 p.m.) during a one-day period (on a Tuesday, Wednesday, or Thursday when schools were in session) in February or March 2009:

- Larned Street and Washington Boulevard
- Congress Street and Washington Boulevard
- Grand River Avenue and Washington Boulevard
- Woodward Avenue and Larned Street
- Woodward Avenue and Congress Street
- Woodward Avenue at Campus Martius (6 Intersections)
- Woodward Avenue and Grand River Avenue
- Woodward Avenue and Adams Avenue
- Woodward Avenue and MLK Jr. Boulevard/Mack Avenue
- Woodward Avenue and Warren Avenue
- Woodward Avenue and Piquette Street
- Woodward Avenue and Grand Boulevard
- Woodward Avenue and Hazelwood Street/Holbrook Street
- Woodward Avenue and Calvert Street
- Woodward Avenue and Glendale Street
- Woodward Avenue and Manchester Boulevard
- Woodward Avenue and McNichols Road
- Woodward Avenue and 7 Mile Road
- Woodward Avenue and State Fair Avenue

In addition, 24-hour counts were collected at all the median turn-arounds between McNichols Road and north of State Fair Avenue. These were collected on either a Tuesday, Wednesday, or Thursday for a one-day period within the month of February, 2009. Origin-destination studies were also conducted at the median turn-arounds north and south of 7 Mile Road to determine the percentage of left-turning vehicles coming from 7 Mile Road and from Woodward Avenue. These studies were conducted on Wednesday, March 11, 2009.

Traffic volumes for the intersection of Woodward Avenue and 8 Mile Road were provided by MDOT. These volumes were obtained in September 2007 as part of a traffic impact study for the Shoppes at Gateway development. Volumes at the intersections of 8 Mile Road and Ralston Street and 8 Mile Road and Hilton Street were estimated based on field observations and approach counts collected in 2007.

Appendix A to this report summarizes the turning-movement counts that were coded into the VISSIM model. The appendix shows intersections where the new 2009 traffic volumes were

used. It also shows which intersections utilized prior-year volumes that were adjusted to 2009 volumes. VISSIM requires that all traffic be balanced within the model between intersections/driveways, as it does not allow vehicles to disappear mid-link when there is a volume imbalance. In order to follow the parameters that VISSIM have all the traffic balanced, the following practices were followed:

- All intersections with counts from 2009 were not adjusted.
- Through volumes at intersections along Woodward Avenue were adjusted to account for volume differences between 2003 and 2009. Turning movements off/on Woodward Avenue were kept within 50 vehicles of previous 2003 counts.

The traffic volumes were all entered as static routes within the VISSIM models for the morning and evening peak hours.

Transit Modeling

The existing bus transit operations along Woodward Avenue between State Fair Avenue and Adams Avenue were coded within the VISSIM model. The following routes were incorporated into the Existing Conditions VISSIM models along Woodward Avenue north of Downtown Detroit:

- DDOT Route 16: Dexter
- DDOT Route 18: Fenkell
- DDOT Route 23: Hamilton
- DDOT Route 31: Mack
- DDOT Route 47: Tireman
- DDOT Route 53: Woodward
- SMART Route 445/475: Woodward Limited
- SMART Route 450/460: Woodward Local

Within Downtown Detroit, bus routes were added in the VISSIM model onto each of the roadways within the study corridor to mimic the number of buses per hour for all of the routes along these roadways. The number of routes was estimated by reviewing schedules from DDOT and SMART. The following routes were added to the model within Downtown Detroit:

- Larned Street/Congress Street: 40 buses per hour during the morning and evening peak hours. The route runs from Woodward Avenue south of Larned Street, turns onto Larned Street, turns left onto Randolph Street, turns left onto Congress Street, then turns right onto Woodward Avenue. Bus stops were located on Larned Street east of Woodward Avenue and on Congress Street east of Woodward Avenue. The VISSIM route represents the following routes, which are on more than two blocks of Larned Street/Congress Street:
    - DDOT Routes 7, 10, 23, 40, 48, 76, 78
    - SMART Routes 125, 150, 200, 225, 305, 610/615, 135/830, 805/851
- Washington Boulevard: eight buses per hour during the morning and evening peak hours. The route runs from Washington Boulevard starting north of Clifford Street then south to Larned Street, onto Larned Street, then onto Randolph Street, onto Congress Street, then back onto Washington Boulevard. Bus stops were located along Washington Boulevard

south of Lafayette Street and north of Michigan Avenue. There was also a bus stop located along Larned Street east of Woodward Avenue and Congress Street east of Woodward Avenue. The VISSIM route represents the following routes that are on more than two blocks of Washington Boulevard:

  - DDOT Routes 10, 19, 40, 48

- Grand River Avenue: 20 buses per hour during the morning and evening peak hours between Times Square and Broadway Avenue. The bus stop for this route was along Grand River Avenue east of Griswold Street. The VISSIM route represents the following routes that are on part of Grand River Avenue:

  - DDOT Routes 21, 36, 37, 47

- Woodward Avenue: 52 buses per hour during the morning and evening peak hours between Adams Avenue and Campus Martius. Bus stops along this route were between Adams Avenue and Park Avenue and south of State Street/Gratiot Avenue. The VISSIM route represents the following routes that are on more than two blocks of Woodward Avenue:

  - DDOT Routes 16, 18, 23, 31, 47, 53
  - SMART Routes 415/420, 445/475, 450/460, 465, 495, 610/615

Major and minor stops were included along all routes along Woodward Avenue in the VISSIM model. An average vehicle dwell time of 15 seconds with a standard deviation of one second was used for a major stop, and a dwell time of six seconds with a standard deviation of one second was used for a minor stop.

Vehicle Compositions

The vehicle composition (cars versus heavy vehicles) was based on the VISSIM model that was provided by MDOT from the TSP study. The overall composition in the study corridor is 96.6 percent cars and 3.4 percent heavy vehicles.

Driver Behavior

The default VISSIM driver-behavior parameters were left in place and unadjusted for the existing conditions models. The Wiedemann 74 car-following-model defaults were utilized, which are specifically oriented towards urban surface street driving parameters, versus the Wiedemann 99 car-following model that is specifically oriented towards freeway driving and is the other car-following model supported within VISSIM.

Seed Interval

A seed interval is the amount of time the model is run in advance of summarizing MOEs. A seed interval is used to load traffic onto the empty transportation network before beginning the analysis period, and is usually the minimum time for a vehicle to traverse the network. A 1,800-second (30-minute) seed interval was used for both the morning and evening peak-hour models. This ensures that the appropriate level of traffic is on the roadway network at the time the MOEs begin recording in the model.

Model Calibration/Validation

In order to obtain accurate results from the VISSIM traffic simulation model, a series of adjustments were made to various parameters to calibrate the model to real-world conditions. Because driver behavior varies significantly based on location, weather, roadway condition, geometry, and other factors, these parameters must be adjusted in VISSIM to replicate existing conditions accurately. Once adjustments are made, model results must be validated by comparing them to real-world measures of operational performance, such as traffic volume served, travel time, queuing, and delay, until a certain level of accuracy is reached.

For this study, model results were validated based on a combination of traffic volume served, field-conducted travel-time runs, and field queuing observations. While volume served is a useful comparison measure for use in model validation, it does not always reflect actual demand. For instance, in real-world conditions, when the demand on a particular segment of roadway exceeds its capacity, the unserved demand results in queuing, while a volume count on the segment may remain constant or potentially decrease as congestion builds. This relationship is illustrated in Figure 3-6.

Once demand exceeds capacity, a breakdown of flow occurs, and volume served begins to decrease as demand increases (Figure 3-6). For this reason, volume served is not an adequate validation measure alone, as it does not include a measure of unserved demand.

Figure 3-6. Volume Served/Demand Relationship

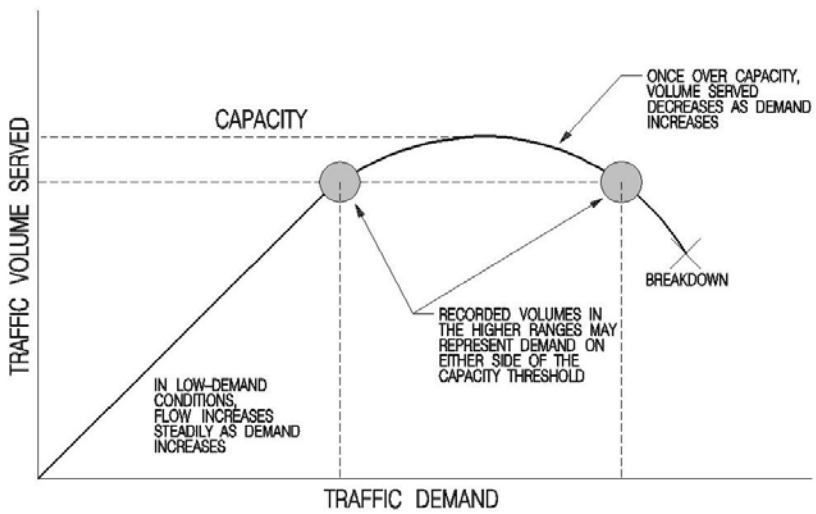

Source: Parsons Brinckerhoff, 2007

Based on the volume data obtained, field travel-time runs, and field observations of queuing conditions, a number of calibration runs were conducted until the volumes served, as reported by the model, were within the greater of 10 percent or 50 vehicles of the actual recorded volumes. In addition, simulation travel times were modeled to within 10 percent of observed travel times. Modeled queuing conditions were also checked against the field-observed conditions for verification.

Minor adjustments from the default VISSIM parameters for lane-change distances were necessary to obtain calibrated existing-conditions models. Appendix B of this report summarizes the input volumes, output VISSIM volumes, VISSIM travel times and actual travel times.

The performance of the intersections within the study corridor was evaluated as part of the VISSIM modeling effort. The level-of-service (LOS) criteria for signalized intersections are taken from Chapter 16 the *Highway Capacity Manual*, *Version 2000*, Exhibit 16-2 (Table 3-14). The LOS criteria are based on average control delay per vehicle and a common standard for measuring delay. Control delay includes the initial deceleration delay, queue move-up time, stopped delay and final acceleration delay. Control delay for signalized intersections may also be referred to as signal delay. Within VISSIM, delay is measured between the ideal travel time (no other vehicles, no signal control) and the mean travel time measured on that section of roadway. For example, if it would take 10 seconds to travel a section of roadway without a traffic signal and it would take an average travel time of 20 seconds with a traffic signal, the delay would be 10 seconds. While the two methodologies are different for calculating delay, the difference between the delay times would be within seconds. Therefore, the LOS criteria listed in Table 3-14 were used for the VISSIM analysis.

3.7.2 Traffic Operations

Seventy-four intersections were reviewed as part of the analysis (Figure 3-7). Based on the analysis, all study corridor intersections are currently operating at acceptable LOS (LOS D or better) during the morning and evening peak hours. Appendix B of this report summarizes the morning and evening peak-hour LOS and delay for all signalized intersection in the study corridor. The results are the average of five runs using different random number seeds.

Table 3-14. Level-of-Service Definitions for Signalized Intersections

Level-of-Service	Description	Average Control Delay Per Vehicle (seconds)
A	Operations with very low control delay occurring with favorable progression and/or short cycle lengths.	≤ 10.0
B	Operations with low control delay occurring with good progression and/or short cycle lengths.	> 10.0 and ≤ 20.0
C	Operations with average control delays resulting from fair progression and/or longer cycle lengths. Individual cycle failures begin to appear.	> 20.0 and ≤ 35.0
D	Operations with longer control delays due to a combination of unfavorable progression, long cycle lengths, or high V/C ratios. Many vehicles stop and individual cycle failures are noticeable.	> 35.0 and ≤ 55.0
E	Operations with high control delay values indicating poor progression, long cycle lengths, and high V/C ratios. Individual cycle failures are frequent occurrences. This is considered the limit of acceptable delay.	> 55.0 and ≤ 80.0
F	Operation with control delays unacceptable to most drivers occurring due to oversaturation, poor progression, or very long cycle lengths.	> 80.0

Source: *Highway Capacity Manual*, Transportation Research Board National Research Council, 2000

While the overall intersections are operating at an acceptable LOS, two individual approaches are failing (LOS E or F) during the evening peak hour. These approaches are:

- Westbound Ferris Street at Woodward Avenue – operating at LOS F
- Eastbound Peterboro Street at Woodward Avenue – operating at LOS E

The modeled vehicle travel time along Woodward Avenue between Adams Avenue and State Fair Avenue from the VISSIM model is summarized in Table 3-15.

Table 3-15. Modeled Existing Travel Time along Woodward Avenue

Section		Travel Time	
		Southbound in Morning Peak Hour	**Northbound in Evening Peak Hour**
Adams	MLK Jr. /Mack	1 min 24 sec	1 min 39 sec
MLK Jr. /Mack	Warren	1 min 17 sec	1 min 31 sec
Warren	Grand Blvd	1 min 57 sec	2 min 1 sec
Grand Blvd	Glendale	4 min 5 sec	4 min 16 sec
Glendale	McNichols	2 min 35 sec	4 min 12 sec
McNichols	State Fair	2 min 27 sec	2 min 27 sec
Total		**13 min 45 sec**	**16 min 6 sec**
Average Speed		**34.5 mph**	**29.4 mph**

Source: Parsons Brinckerhoff, 2011

The average modeled travel time southbound along Woodward Avenue between State Fair Avenue and Adams Avenue in the morning peak hour is 13 minutes and 45 seconds. The evening peak-hour time for a northbound vehicle at the same location is 16 minutes and six seconds.

The average modeled travel speed along southbound Woodward Avenue between State Fair Avenue and Adams Street in the morning peak hour is 34.5 mph, while it is 29.4 mph northbound in the evening peak hour. This is for the distance of 41,850 feet, or 7.9 miles, between State Fair Avenue and Adams Street.

Figure 3-7. Study Intersections

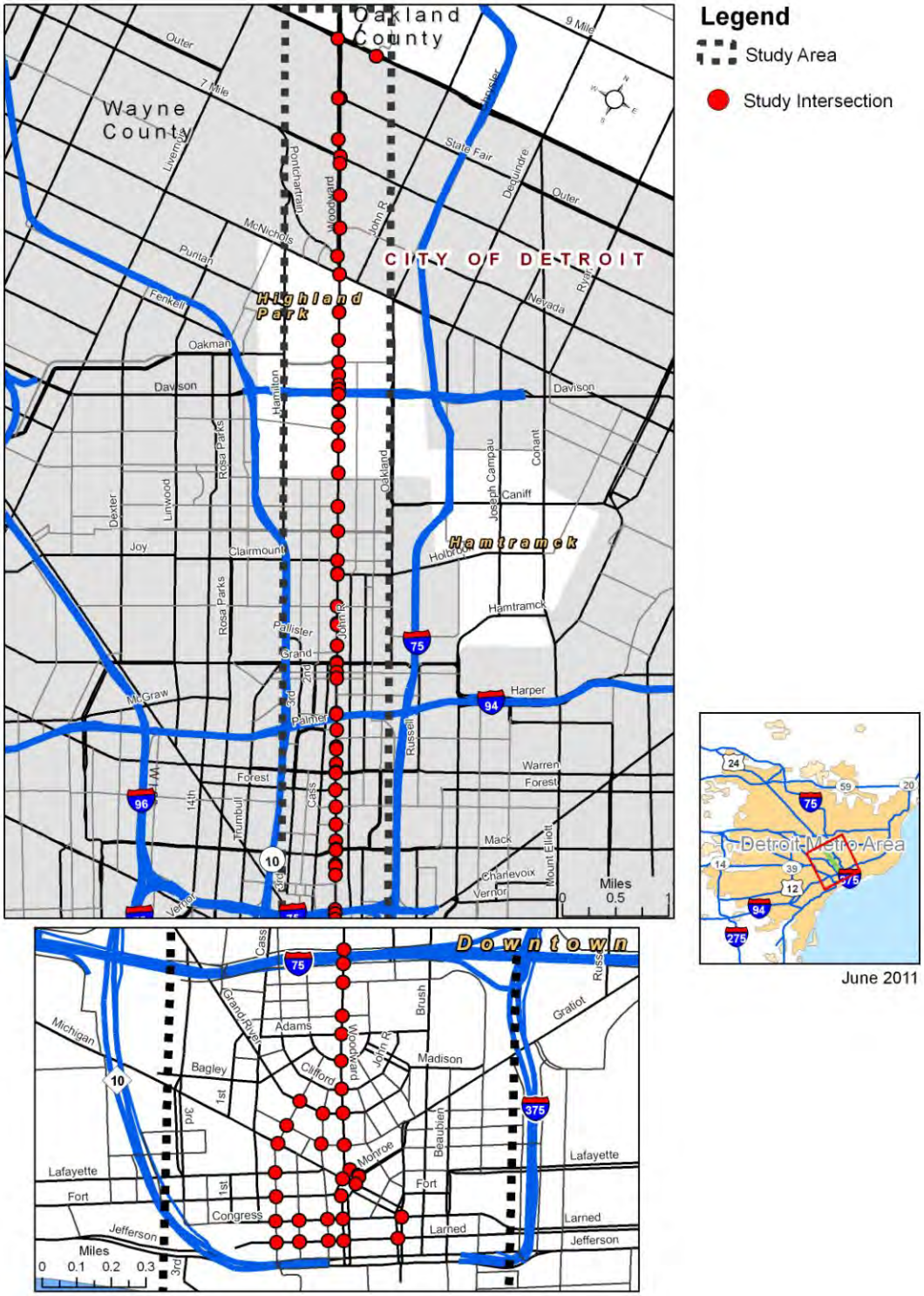

Source: Parsons Brinckerhoff, 2011

4.0 Future Transportation Conditions

This chapter summarizes future (2030) transportation conditions in the study corridor with and without the Woodward Avenue LRT Project.

4.1 Future (2030) Transportation Patterns

According to SEMCOG's 2030 Regional Transportation Plan forecasts, the region will gain approximately 575,000 more people and 436,000 more jobs between 2000 and 2030. This population and employment growth is expected to result in an increase in the number of bottleneck locations and congested corridors in the region. By 2030, Wayne County will have 26 miles of bottleneck congestion and 331 miles of congested roadways. Congested corridors forecast for the seven-county Southeast Michigan region in 2030 are shown on Figure 4-1. Congested highways near the Woodward Avenue Corridor where demand is expected to exceed capacity (volume-to-capacity ratio greater than one) by 2030 include the I-94 corridor and segments of I-75. Congested non-major roadways in the study corridor are also shown on Figure 4-1.

Recently issued 2010 U.S. Census figures show a decline in population between 2000 and 2010 in the region and within the City of Detroit. However, future transportation conditions modeling forecasts was completed before 2010 Census results were made available; therefore, the future transportation conditions discussed in this report and in the FEIS are based on SEMCOG's 2030 Regional Transportation Plan and do not reflect 2010 U.S. Census statistics.

This section summarizes study corridor travel patterns in 2030, compared to conditions in 2005. In determining the travel patterns in the study corridor, trip volumes between major activity centers were identified by trip category. The trip categories include work and non-work trips, with non-work trips comprising trips to school, shopping, and other destinations. The numbers of work and non-work trips were determined from the SEMCOG travel demand forecasting model (Tables 4-1 and 4-2).

4.1.1 Travel Pattern Analysis

For this analysis, the region was divided into 27 districts (Figure 4-2) to better focus attention on travel occurring in the Woodward Avenue Corridor. The CBD (bounded by I-75, M-10, I-375, and the Detroit River) was divided into nine districts that are referred to collectively as Downtown. The other districts comprising the Woodward Avenue Corridor are Lower Woodward, Medical Center, Wayne State, New Center, Boston Edison, Highland Park, and Upper Woodward. Some of the districts were grouped based on their close proximity to each other and similar land uses among the districts.

The analysis focused on trips to the districts along the study corridor, including trips internal to the Corridor and trips that begin or end outside of the Corridor. These external districts include the remainder of the City, the remainder of Wayne County and the counties of Oakland, Macomb, and Washtenaw.

Figure 4-1. Congested Roadways in 2030

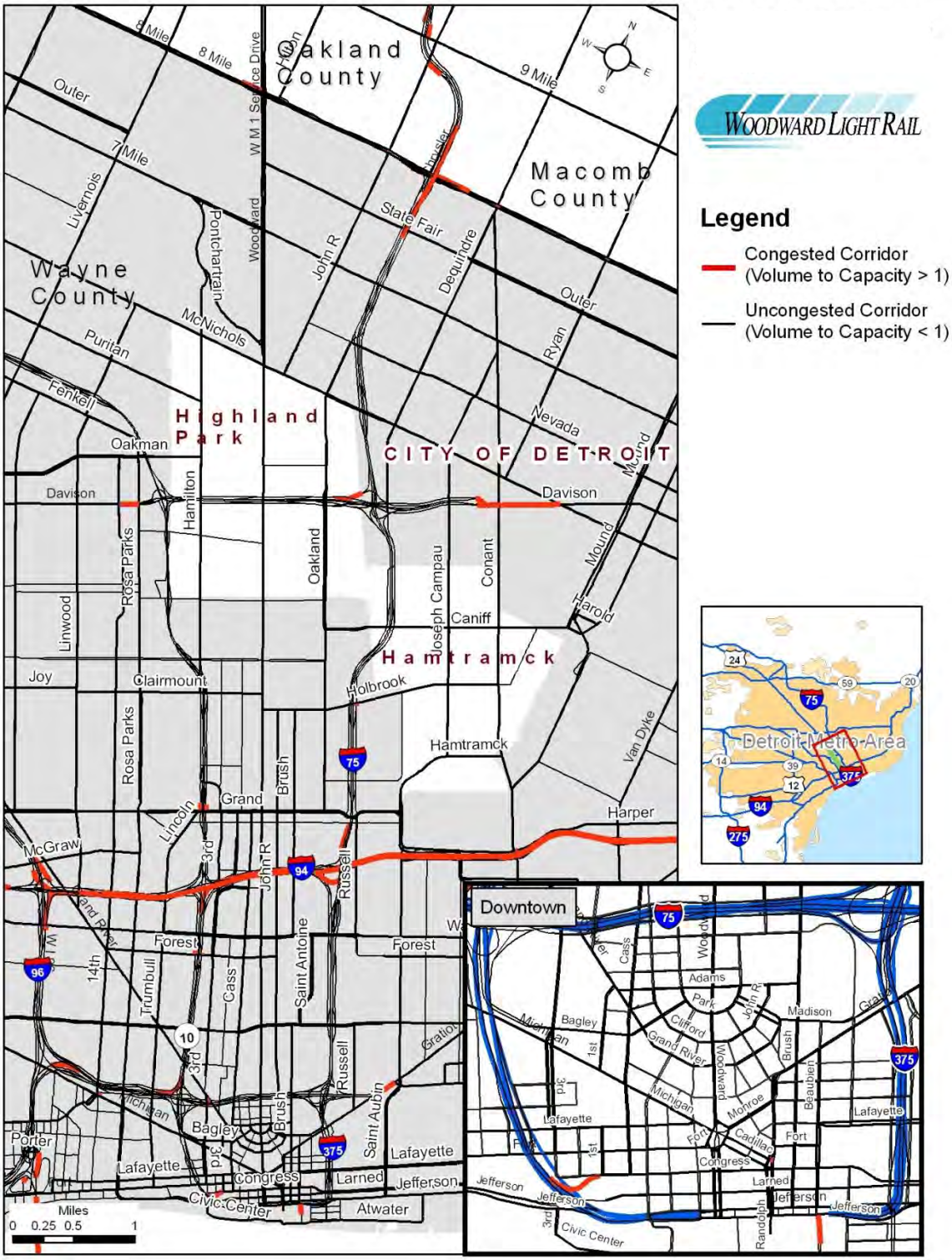

Source: 2030 SEMCOG Travel Demand Model, 2009

Figure 4-2. Study Corridor Districts

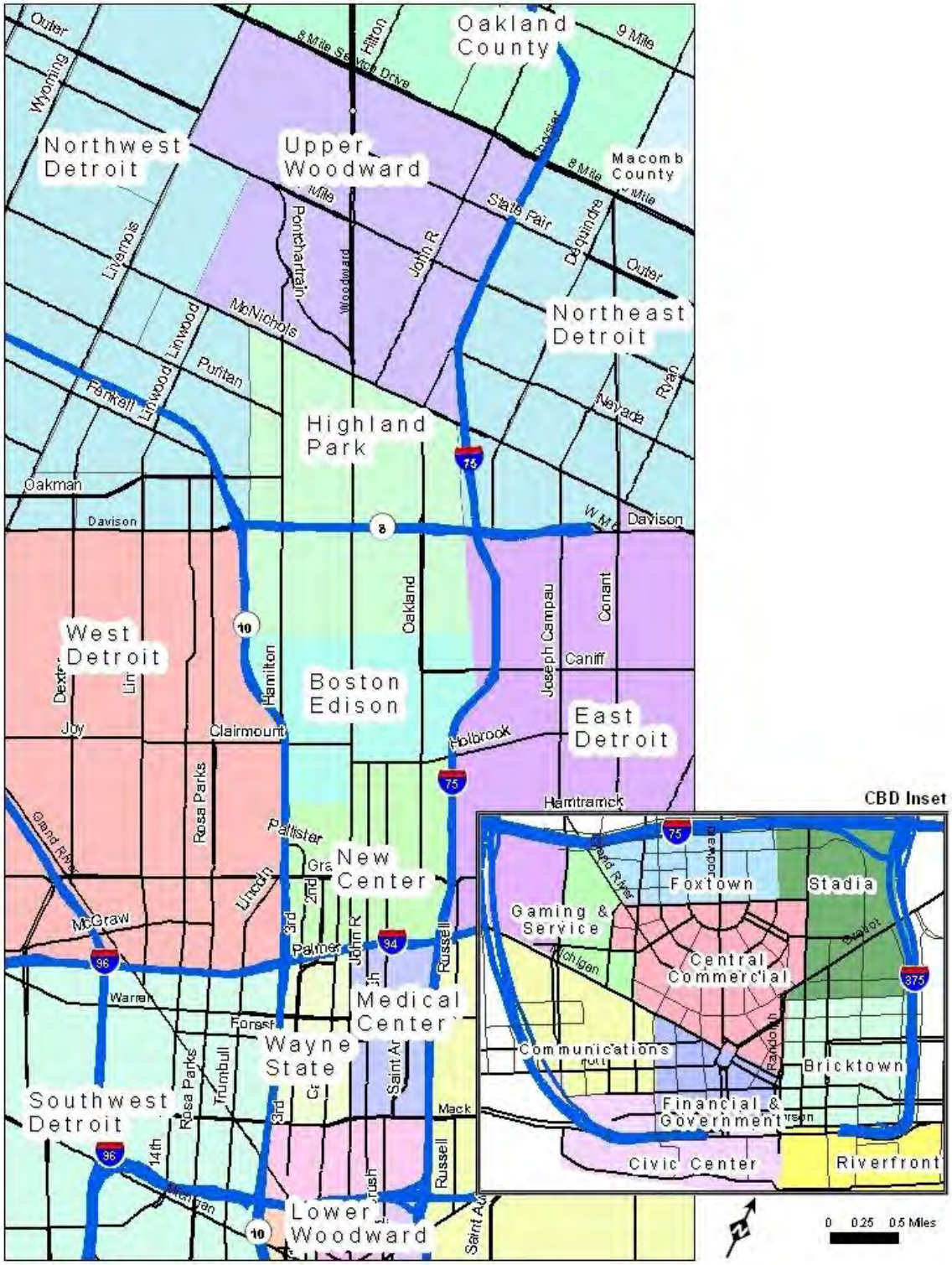

Source: Parsons Brinckerhoff, 2009

4.1.2 Travel To and From the Study Corridor

Within the southeastern Michigan region, there were approximately 15.7 million person trips per day in 2005. The majority of trips – 77.1 percent – were for non-work purposes. By 2030, it is expected that trips will total 17.4 million person trips, an estimated 10.9 percent increase from 2005.

Woodward Avenue is a primary transportation corridor in the region. Many trips to and from the Corridor are expected, since the Corridor has numerous activity centers, including both local and regional attractors. The analysis confirmed this expectation, with only 7 to 8 percent of work trips and 12 percent of non-work trips both starting and ending within the study corridor.

Most of the trips in 2005 came from parts of Detroit outside the study corridor; this trend is expected to continue in 2030. Wayne County is another area with significant travel to and from the study corridor, while Oakland County has a significant number of non-work trips to and from the Corridor. Table 4-1 summarizes work trips to and from the Corridor and locations outside of the Corridor; Table 4-2 presents the same information for non-work trips. Overall, in both 2005 and 2030, 59 percent of Corridor trips originate within the City of Detroit.

Table 4-1. Origins of Work Trips in Study Corridor (2005 and 2030)

Year	Within Corridor	Rest of Detroit	Rest of Wayne County	Oakland County	Macomb County	Washtenaw County	Total
2005	18,570	100,852	55,382	45,109	28,151	2,594	250,658
2030	16,918	87,315	51,499	41,843	28,313	3,104	212,074

Source: SEMCOG 2030 Regional Transportation Plan

Table 4-2. Origins of Non-Work Trips in Study Corridor (2005 and 2030)

Year	Within Corridor	Rest of Detroit	Rest of Wayne County	Oakland County	Macomb County	Washtenaw County	Total
2005	62,170	274,463	66,272	81,579	40,745	2,600	527,828
2030	60,447	253,943	67,113	76,846	41,205	2,948	502,502

Source: SEMCOG 2030 Regional Transportation Plan

4.1.3 Travel To and From the Corridor by District

Although the analysis shows a decline in total trips entering and leaving the Corridor over the coming decades, traffic is forecast to increase in some districts in the Corridor (Table 4-3). Some of the districts were grouped based on their close proximity to each other and similar land uses among the districts. Specifically, trips to and from Downtown East (Stadia/Bricktown/Riverfront) are projected to grow by 9 percent (an additional 8,120 daily trips). Likewise, Lower Woodward and Foxtown are expected to see a 12 percent growth in trips. The major job centers of Wayne State University (WSU), the Detroit Medical Center (DMC), and Downtown Central (Central Commercial/Financial & Government/Civic Center) are anticipated to decline slightly, but will remain significant generators in the Corridor, with over

113,000 daily trips to WSU/DMC and approximately 240,000 daily trips to and from Downtown Central.

Table 4-3. Trips Beginning or Ending in Study Corridor Districts (2005 and 2030)

District	2005	2030	Growth	Percent Growth
Stadia, Bricktown, Riverfront (Downtown East)	93,223	101,343	8,120	9%
Lower Woodward, Foxtown	56,026	62,556	6,530	12%
Central Commercial, Finance & Government, Civic Center (Downtown Central)	116,585	113,163	-3,422	-3%
West Gaming, Services, Communications (Downtown West)	44,624	37,292	-7,332	-16%
New Center	71,646	53,333	-18,313	-26%
WSU & DMC	240,841	239,560	-1,281	-1%
Highland Park, Boston Edison/North End	126,499	103,800	-22,699	-18%
Upper Woodward	87,259	76,016	-11,243	-13%
Total	**836,703**	**787,063**	**-49,640**	**-6%**

Source: SEMCOG 2005 Regional Transportation Plan

Corridors that are adjacent to Woodward Avenue between Downtown Detroit and State Fair Avenue are M-10, I-75, Oakland Street, Hamilton Avenue, Brush Street, John R Street, and Cass Avenue. The 2030 SEMCOG travel demand forecasting model indicates that M-10 and the majority of I-75 are expected to operate at a vehicle-to-capacity (V/C) ratio of 1.0 or less during the morning and evening peak hours. Most of the other area roadways are not expected to operate under congested conditions, with the exception of I-94 (Figure 4-1).

4.1.4 Travel Forecasting Methodology

The travel demand forecasting and the ridership estimates developed for the Woodward Avenue LRT Project are based on the SEMCOG Hybrid Travel Demand Forecasting Model used in the DTOGS. The model was developed following the general forecasting procedures of SEMCOG (E4 Model) with transit forecasting-related model components adopted from the Ann Arbor to Downtown Detroit Transportation Alternative Analysis Model. The SEMCOG Hybrid Travel Model utilized a 2005 base year and a 2030 forecast year, based on the SEMCOG 2030 Regional Transportation Plan. For more information on the SEMCOG Hybrid Model, please refer to DTOGS Alternatives Analysis Appendix I for the travel demand forecasting documentation.

4.2 Future (2030) No Build Conditions

This section summarizes future (2030) No Build transportation conditions in the study corridor, i.e., without the Woodward Avenue LRT Project.

4.2.1 Transit

In accordance with the FTA, the No Build Alternative must include the following features:

- Maintenance of existing facilities and services in the study corridor and region;

- Completion and maintenance of committed projects in the study corridor that have successfully completed their environmental reviews; and
- Continuation of existing transportation policies.

There is discretion regarding what is incorporated in the No Build condition for the region outside the study corridor:

- An alternative that incorporates "planned" improvements that are included in the fiscally constrained long-range plan for which need, commitment, financing, and public and political support are identified and may reasonably expect to be implemented.
- A conservative definition that adds only "committed" improvements – typically those in the annual element of the Transportation Improvement Program (TIP) or local capital programs – together with minor transit service expansions and/or adjustments that reflect a continuation of existing service policies into newly developed areas. In some metropolitan areas with severe financial constraints, this definition may involve no improvements to transportation facilities or transit services in the Corridor beyond routine maintenance and replacement.

The No Build Alternative assumes existing service (as represented in SEMCOG's base network of existing transit in its 2030 network) as well as the relocation of downtown transit center to Rosa Parks site and bus route modifications associated with the relocation for applicable DDOT, SMART, and Transit Windsor routes, all of which occurred in 2009..

In addition, the No Build Alternative incorporates several new express routes discussed in DDOT's 5-Year Service Plan:

- Dexter Avenue (Express Route 72)
- Crosstown (Express Route 70, East Warren Avenue)
- Gratiot Avenue (Express Route 74).
- Grand River Avenue (Express Route 71)
- 7 Mile Road – 8 Mile Road corridor (represented on 7 Mile Road)
- Evergreen – Greenfield Road corridor (represented on Greenfield Road)
- Michigan Avenue - West Warren Avenue corridor (represented on West Warren)
- Fort Street – Jefferson Avenue corridor (represented as two separate express routes terminating in downtown)

The service levels and alignments assumed for Woodward Avenue transit routes for the No Build Alternative are as follows:

- Route 53 (Woodward Local): 10-minute headways all day (currently eight minutes, which does not reflect adjustment with implementation of Woodward Express).
- Express Route 53: 30-minute headways only in the peak direction, peak period (the route does not currently exist but is included in the DDOT 5-Year Service Plan).

The combination of local and express services totals eight buses per hour inbound/six buses per hour outbound in the peak period, and six buses per hour in the base period. Like all DDOT

routes serving Downtown Detroit, DDOT routes using Woodward Avenue would make connections at the Rosa Parks Transit Center, using the routing identified in DDOT's draft report entitled *Rosa Parks Transit Center Routing Options* (May 2009). SMART routes using Woodward Avenue would not be modified and would bypass the Rosa Parks Transit Center. No specific changes to future SMART or DTC services were identified for the No Build Alternative.

4.2.2 Traffic Conditions

This section reviews future traffic growth and traffic operations within the study corridor with the No Build Alternative.

SEMCOG travel demand forecasts for the study corridor were reviewed. Differences in morning and evening peak-period traffic volumes between 2005 and 2030 are minimal (either negative or less than 5 percent difference). Through discussions with the City of Detroit and MDOT, a 1 percent growth rate per year was agreed upon to forecast traffic volume increase s from 2009 to 2030. On this basis, traffic growth of 23 percent was added to the 2009 morning and evening peak hour volumes for the 2030 forecast (see Appendix C of this report). These volumes were input to the VISSIM model to determine future 2030 No Build delay and LOS. The City of Detroit and the City of Highland Park do not have any projects on Woodward Avenue that impact the roadway for the No Build Alternative.

Appendix D of this report summarizes the morning and evening peak-hour LOS and delay derived from the VISSIM models. The results are the average of five runs using different random number seeds. All intersections are expected to operate with an overall LOS D or better during the morning and evening peak hours with the No Build Alternative.

There are two intersections where the approach LOS is expected to perform below LOS D during the evening peak hour:

- Westbound Ferris Street at Woodward Avenue – operating at LOS F
- Eastbound Davison (M-8) Service Drive at Woodward Avenue – operating at LOS E

The signal timings were adjusted at these intersections to mitigate the failing levels of service. With adjusted signal timings, all the intersection approaches would operate at LOS D or better in both the morning and evening peak hours. Appendix D of this report also summarizes the intersection LOS; all of the intersections would operate at LOS D or better.

The anticipated travel time along Woodward Avenue between State Fair Avenue and Adams Avenue, based on VISSIM modeling, is summarized in Table 4-4.

Table 4-4. Future No Build Modeled Travel Time along Woodward Avenue (2030)

Section of Woodward Avenue		Travel Time	
		Southbound in Morning Peak Hour	**Northbound in Evening Peak Hour**
Adams	MLK Jr. /Mack	1 min 54 sec	1 min 48 sec
MLK Jr. /Mack	Warren	1 min 25 sec	1 min 36 sec
Warren	Grand Blvd	1 min 55 sec[1]	1 min 56 sec[1]
Grand Blvd	Glendale	4 min 18 sec	4 min 5 sec
Glendale	McNichols	2 min 54 sec	4 min 32 sec
McNichols	State Fair	2 min 29 sec	2 min 31 sec
Total		**14 min 55 sec**	**16 min 28 sec**
Average Speed		**31.8 mph**	**28.8 mph**

[1]Trav el time is reduced form Existing Conditions and No Build Alternatives due to additional green signal time provided

Source: Parsons Brinckerhoff, 2011

The amount of time for a vehicle to travel southbound along Woodward Avenue between State Fair Avenue and Adams Avenue in the morning peak hour is expected to be 14 minutes and 55 seconds. The evening peak-hour travel time for a northbound vehicle at the same location is expected to be 16 minutes and 28 seconds. These travel times represent increases of about 70 seconds in the morning peak hour and 22 seconds in the evening peak hour over existing conditions.

5.0 Roadway and Rail Guideway Design Principles

This chapter summarizes roadway and rail guideway design principles related to operations and safety, which were used to refine the Project alternatives. The concept-level design of the Preferred Alternative is consistent with these design principles.

5.1 Background to Refinement of the Preferred Alternative

The Federal Highway Administration (FHWA) and the Michigan Department of Transportation (MDOT) identified several operations- and safety-related issues with the proposed Project's design features. Therefore, FTA, FHWA, MDOT, and City of Detroit officials and representatives held a series of meeting to address the operational and safety issues for the Project segment on Woodward Avenue north of Adams Street. Appendix E provides meeting minutes and presentations from those meetings. Over the course of the meetings, the agencies reached consensus on a set of design principles based on current standards and best practices in the industry (Section 5.2, below). The refinements made in conformance with the design principles and underlying standards are considered acceptable by FHWA and MDOT, pending further detailed engineering in subsequent phases of project development. The Preferred Alternative, discussed in Chapter 6.0, and the curb-running operating option associated with Alternatives B2 and B3, discussed in Chapter 7.0, reflect these refinements.

5.2 Principles Applied in Modifying the Preferred Alternative

The design principles applied in refining the Preferred Alternative and the curb-running operating option have been categorized relative to operations and safety within the study corridor's roadways, within the sidewalk areas, and within the LRT or rail guideway. Each design principle is described below.

5.2.1 Roadway and Parking Design Principles

The roadway area is defined to include the travel lanes and adjacent on-street parking for vehicular traffic from curb to curb. The following principles guided refinement of the Project alternatives between Adams Street and the Michigan State Fairgrounds:

Principle 1: 11-foot travel lanes are to be used along the entire Project alignment (except where infeasible – e.g., freeway overpasses). This design principle is from the *MDOT Road Design Manual* (Chapter 3, Appendix 3A), which states that a minimum 11-foot lane width must be maintained along non-freeway arterials with a design speed of less than 40 miles per hour (mph).

Principle 2: Parking lanes adjacent to a LRT lane are to be a minimum of 10 feet in width. This design principle is derived from the 2004 edition of *Geometric Design of Highways and Streets* from the American Association of State Highway and Transportation Officials (AASHTO). The manual (Chapter 4, On-Street Parking) states:

> "To provide better clearance and the potential to use the parking lane during peak periods as a through-travel lane, a parking lane width of 10 to 12 feet is desirable. A 10 to 12 foot parking lane will also accommodate urban transit operations. This width is also sufficient to accommodate delivery vehicles and serve as a bicycle route, allowing a bicyclist to maneuver around an open door on a motor vehicle."

The minimum width for a parking lane is eight feet, based on the 2004 edition of *Geometric Design of Highways and Streets* from AASHTO. However, given the potential for snow accumulation within the parking lane in northern climates, as well as a desired 2-foot distance between a parked vehicle and a LRT vehicle, the 10-foot parking lane was recommended and agreed upon for the curb-running design.

Also, this design principle reflects guidance provided in the January 2011 article "General Design and Engineering Principles of Streetcar Transit" (*Institute of Transportation Engineers (ITE) Journal)*, which stated:

> "Any parking/loading lane that is adjacent to a travel lane with streetcar movements should be slightly wider than the customary eight feet. Some trucks have a body width of 8½-feet with protruding mirrors. Moreover, codes generally allow vehicles to be positioned some distance away from the curb face without being considered illegally parked. Stationary vehicles must not protrude into the dynamic envelope of a passing streetcar. Ideally, these lanes would have a minimum width of 10-feet (although this is not always achievable) and the outer limit should be marked with an edge line."

Principle 3: The roadway design is to stay within the existing curb-line (except where infeasible – e.g., LRT station locations). Staying within the existing curb-line is recommended as a measure to reduce impacts to the width of the sidewalk and the cost of moving utilities. Numerous underground and aboveground utilities have been identified in the public rights-of-way within the sidewalk area; the utilities would need to be relocated should the curb line be moved within the sidewalk area. In addition, relocating the curb would disrupt the location of proposed pedestrian ramps included in the LRT curb-running design to conform to Americans with Disabilities Act (ADA) requirements at intersections; this would also result in additional cost to the Project. Lastly, staying within the existing curb-line would minimize reducing the width to the sidewalk area (see Section 5.2.2 regarding sidewalk area).

Principle 4: The design is to maintain reasonable corridor capacity with two travel lanes in each direction. Through the discussions among FHWA, MDOT, and the City of Detroit, it was agreed that two general-use lanes (lanes excluding the proposed LRT) in each direction along Woodward Avenue north of Adams Street would constitute "reasonable corridor capacity." In addition to considering traffic demand along the Corridor in reaching this consensus, it was determined that two through lanes would be needed in each direction to maintain traffic flows should a disabled vehicle, illegally parked vehicle, or delivery truck block one travel lane.

5.2.2 Sidewalk Margin Design Principles

The term "sidewalk margin," as used in this report, includes all pedestrian structures or other improvements for pedestrians that are within the space between the street margin, as defined by a curb on the edge of the traveled road surface, and the line where the public right-of-way meets the abutting property. Figure 5-1 illustrates the sidewalk margin. With this definition, the following principle was defined for use in refining the LPA Alternatives.

Principle 5: A 15-foot sidewalk margin is preferred. The City of Detroit Traffic Engineering Division recommends a 15-foot sidewalk margin along major roadways, such as Woodward Avenue. In locations where a 15-foot sidewalk margin cannot be achieved, a minimum six-foot clear sidewalk area and a four-foot buffer space is to be maintained along the entire alignment, for a total of 10 feet of sidewalk margin. The four feet of buffer space may be used for pedestrian amenities, such as bus shelters and waste receptacles, as well as provide an area for aboveground utilities. There are locations along the Corridor where the 15-foot sidewalk margin cannot be achieved within the existing right-of-way, particularly at station locations and in the 100-foot section.

Figure 5-1. Illustration of Sidewalk Margin

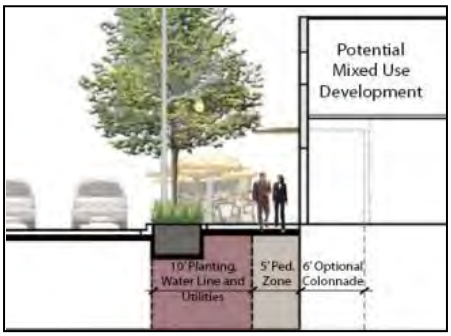

Source: www.HoustonTomorrow.org

ADA, which was amended in 2010, states that the minimum continuous and unobstructed clear width of a pedestrian access route shall be four feet, exclusive of the width of the curb. However, if the existing sidewalk width is less than five feet, "passing pads" measuring 60" x 60" must be constructed every 200 feet to allow disabled persons to pass one another. Crossing driveways and alleys are considered "passing pads."

According to the City of Detroit Department of Public Works, the minimum width for a paved sidewalk is six feet, with a recommended buffer space of four feet between a sidewalk and a curb, for a total 10-foot wide sidewalk margin.

MDOT design standards require only a minimum six-foot wide paved sidewalk within the City of Detroit.

ITE's *Design for Safety of Pedestrian Facilities* states that, within commercial areas, the minimum width for paved sidewalk is five feet, with a minimum buffer space of two feet and a recommended buffer space of four or five feet. Within residential areas, the minimum width of paved sidewalk is five feet and a buffer space of two feet is recommended. Within downtown areas, a minimum eight-foot wide pavement sidewalk margin should be used.

The *Pedestrian Facilities User Guide—Providing Safety and Mobility* (2002) recommends the following sidewalk guidelines (Table 5-1) for cities large and small.

Table 5-1. Recommended Pedestrian Sidewalk Guidelines

Type of Facility	Sidewalk Width	Buffer Space	Total Margin
Along Parks, Schools and Other Major Pedestrian Generators	8 to 10 feet	4 to 6 feet	12 to 16 feet
Arterial or Major Streets	6 to 8 feet	4 to 6 feet	10 to 14 feet
CBD areas	8 to 12 feet*		

Source: Pedestrian Facilities User Guide – Providing Safety and Mobility, 2002
*8-feet with a planter strip, 12-feet with no planter strip

As seen by various Federal, State and city standards and the recommendations from various documents, the minimum and preferred sidewalk margin principles for this Project can be achieved.

5.2.3 Rail Guideway Design Principles

The rail guideway is the area where the LRT vehicles travel, either in a shared-use lane with other vehicular traffic or in a dedicated lane separated from other vehicular traffic. The width needed for the guideway depends on whether LRT traffic is mixed with or is separated from other traffic.

Operating Option A: Median Running

Principle 6a: The median-running LRT guideway width is to be 28 feet. With the median-running operating option, the LRT vehicles would operate in the center median of Woodward Avenue from north of Adams Street to the Michigan State Fairgrounds. Within this section, the LRT vehicles would travel separately from other traffic. According to the American Railway Engineering and Maintenance-of-Way Association (AREMA) and Transit Cooperative Research Program (TCRP) Report #57-*Track Design Handbook for Light Rail Transit*, the recommended width for two exclusive side-by-side LRT guideways, i.e., one guideway in each direction of travel, is 28 feet.

The recommended 28-foot width for two guideways is based on the combined distance requirements for various elements of the LRT system. A typical LRT vehicle is approximately 8.8-feet wide. Between the two LRT guideways, approximately five feet of space is recommended to allow for placement of the catenary poles that supply power to the LRT vehicles, as well as the dynamic envelope of the LRT vehicle. In addition, 2.5 feet of shy distance is recommended between the LRT vehicles and other traffic, which accommodates the swaying of the LRT vehicles as they travel along the guideway and buffer between vehicular traffic and the LRT vehicles.

Operating Option B: Curb Running

Principle 6b: The curb-running LRT guideway width is to be 12 feet. With the curb-running operating option, the LRT vehicles would operate in the right-most travel lane of Woodward Avenue from Adams Street to just north of Grand Boulevard. Within this section, the LRT vehicles would travel in a shared-use lane with other vehicles. According to AREMA and TCRP Report #57, a recommended width of a travel lane for

LRT vehicles is 12 feet, accounting for the typical LRT vehicle width of 8.8 feet, and an additional one to two feet to accommodate a buffer between autos and trucks traveling next to the LRT vehicles and the dynamic envelope of the LRT vehicle.

5.2.4 Station/Platform Width

The recommended width of a LRT station varies, depending on whether the LRT is median- or curb-running, as well as whether the LRT stations serve LRT vehicles traveling in one direction (single-loaded station) or two directions (double-loaded station).

Principle 7: LRT station width is to be 15 feet for median-running operations with double-sided platforms and 10.5 feet for median- and curb-running operations with single-sided platforms. In general, LRT station design includes several components that are essential to travel safety and security, as well as amenities for passenger comfort and convenience. LRT station design also reflects compliance with ADA requirements. Primary elements of a LRT station include the platform(s), shelter, wheelchair ramps, and station amenities such as lighting, benches, security systems and informational displays. Platforms for the Project alternatives would be compatible with low-floor LRT vehicles, typically requiring a 14-inch station platform height. The platform length would likely range from 190 to 200 feet, based on the LRT vehicle length of two linked vehicles, space available for each LRT station at the proposed station locations, and whether the alignment is median- or curb-running.

Platform width would typically range from 15 to 24 feet for double-sided median platforms with the median-running operating option, and 10.5 to 12 feet for single-sided platforms with either the median- or curb-running operating option. Stations with the curb-running operating option would bump out approximately eight feet from the existing sidewalks, and any current on-street parking would be removed at station locations. The remaining sidewalk width behind curb-running LRT stations would be no less than six feet.

A minimum LRT station width of 15 feet was used for the median-running operating option for double-sided platforms. For single-sided platforms, a minimum width of 10.5-feet was used. For the curb-running operating option, all stations would be single-sided; therefore, a minimum station width of 10.5 feet was used.

6.0 Preferred Alternative

This chapter summarizes future transportation conditions in the Woodward Avenue study corridor that would result with implementation of the Preferred Alternative (Chapter 2, Section 2.2). Section 6.1 discusses the proposed alignment, operating conditions, and station locations for the Preferred Alternative along Woodward Avenue and within Downtown Detroit. Sections 6.2 through 6.10 discuss Project-related impacts to transit, motorized and non-motorized safety, traffic operations, construction, and other alignment and operations elements. Section 6.11 summarize impacts from the two vehicle storage and maintenance facility (VSMF) sites proposed as part of the Preferred Alternative.

6.1 Proposed Alignment, Operating Conditions and Station Locations

6.1.1 Alignment and Operations

This section of the report provides additional detail on the Preferred Alternative within Downtown Detroit and along Woodward Avenue from downtown to the Michigan State Fairgrounds. The Preferred Alternative's Downtown alignment, south of the Northbound I-75 Service Drive to Larned Street, would be as illustrated in Figure 6-1 and described in Chapter 2, Section 2.2.1. The Preferred Alternative would be a median-running operation along Woodward Avenue from the Northbound I-75 Service Drive to the Michigan State Fairgrounds. Refinements made to the median-running alignment to address safety and operating issues are discussed in Appendix F of this report and summarized as follows:

- 11-foot lane widths on Woodward Avenue for all cross-sections;
- Exclusive left-turn lanes and simultaneous left-turn phasing at all intersections, except the following for which lead/lag phasing is proposed: Amsterdam Street/Piquette Street; Hazelwood Street/Holbrook Street; and Buena Vista Street;
- Within the 100-foot right-of-way (ROW) section, the left-turn lanes would be shared with the LRT rail guideway;
- Stations at Manchester Boulevard and McNichols Road would be moved to accommodate left-turn lanes;
- Baltimore Street would have right-in/right-out access only and the signal would be removed;
- The Piquette Street/Amtrak Station would be moved south of Piquette Street; and
- Kirby Street intersection, the signal will remain

The Preferred Alternative's alignment within Downtown Detroit is described below, by section.

Woodward Avenue between Northbound I-75 Service Drive and Park Avenue / Witherell Street (~0.2 miles)

The existing ROW between the Northbound I-75 Service Drive and Park Avenue is 120 feet wide, with 90 feet of curb-to-curb roadway width and 15-foot-wide sidewalks on each side.

Figure 6-1. Preferred Alternative

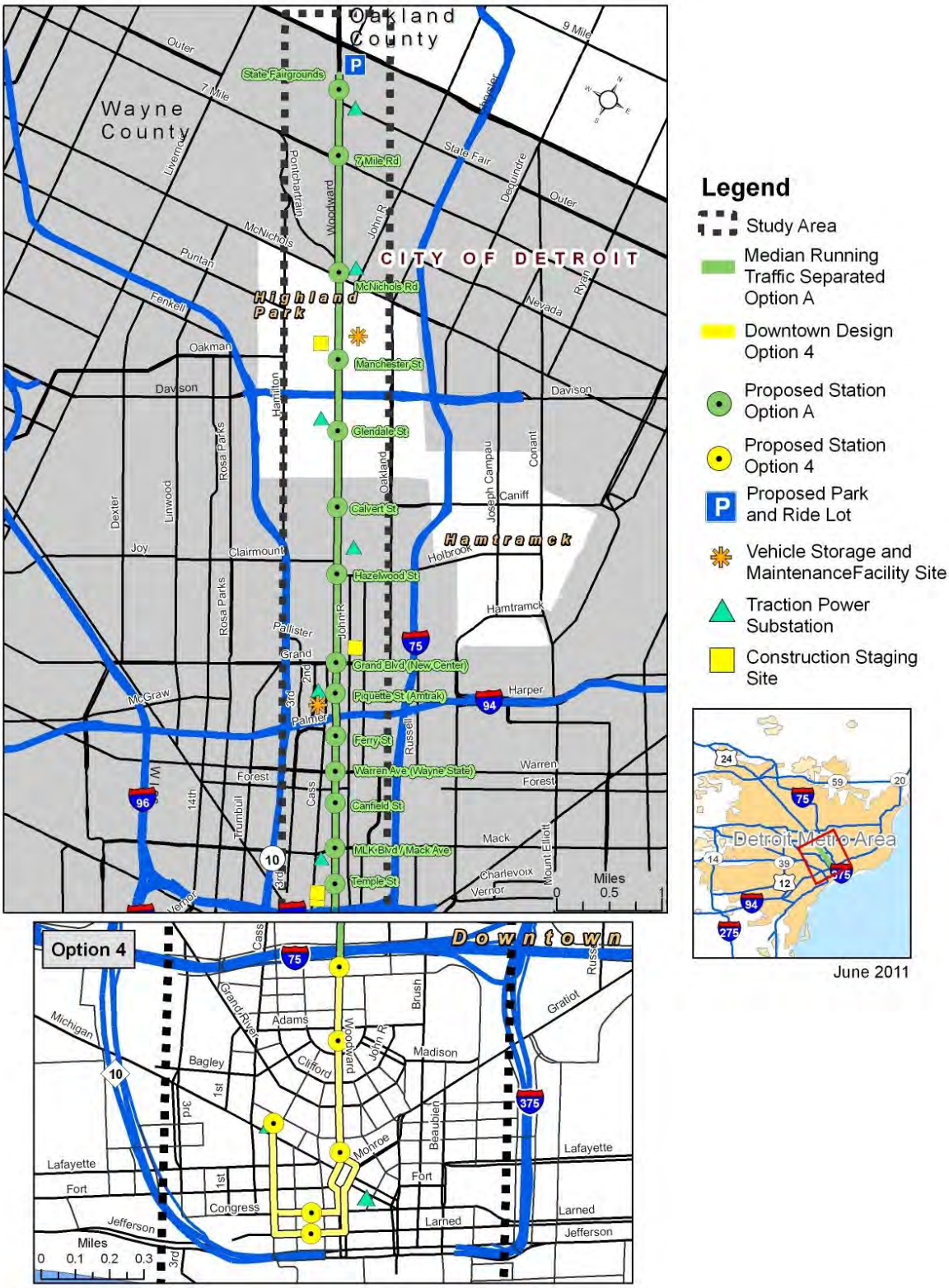

Source: Parsons Brinckerhoff, 2011

The alignment through this segment would be median-running, with two 11-foot-wide general-use lanes in each direction, a 28-foot-wide LRT rail guideway and 11-foot-wide exclusive left-turn-only lanes for both directions of travel at the intersection of Woodward Avenue and Montcalm Street. The Woodward Street/Montcalm Street intersection would become right-in/right-out only due to the Foxtown/Stadium LRT station to be located between the Northbound I-75 Service Drive and Montcalm Street (Figure 6-2). The signal at Woodward Street at Montcalm Street would become a pedestrian-only signal. There would be no on-street parking in this section of the alignment.

Figure 6-2. Median-Running Exclusive Lane Cross-Section along Woodward Avenue Foxtown/Stadium Station

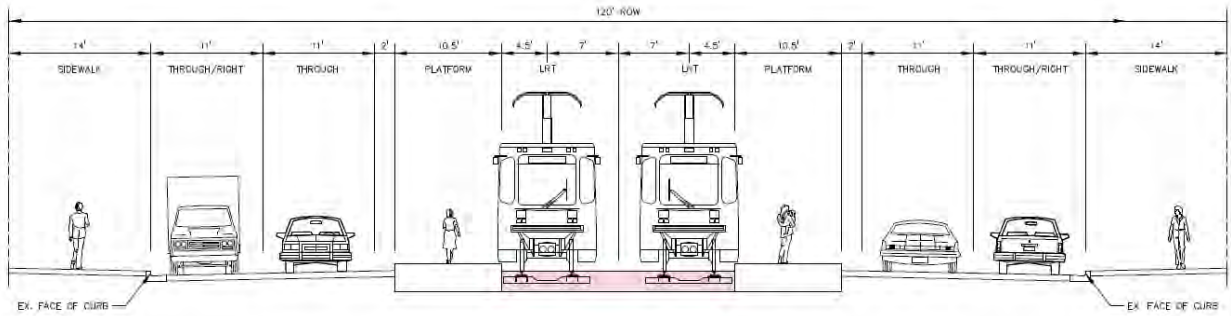

Source: URS Corporation, 2011

Woodward Avenue between Park Avenue/Witherell Street and Congress Street/Larned Street

At the intersection of Woodward Avenue and Park Avenue/Witherell Street, the Preferred Alternative would transition from a median-running exclusive LRT lane to curb-running operation in an LRT/shared-use lane. South of Park Avenue, Woodward Avenue would include two 13-foot-wide curb-running shared LRT lanes and two 11-foot-wide general use lanes (Figure 6-3) until it reaches Campus Martius Park. The laneage would remain as it is today, except with the introduction of LRT sharing the outside lane with other vehicular traffic.

Figure 6-3. Curb-Running Shared-use Lane Cross-Section on Woodward Avenue between Park Avenue/Witherell Street and Campus Martius Park

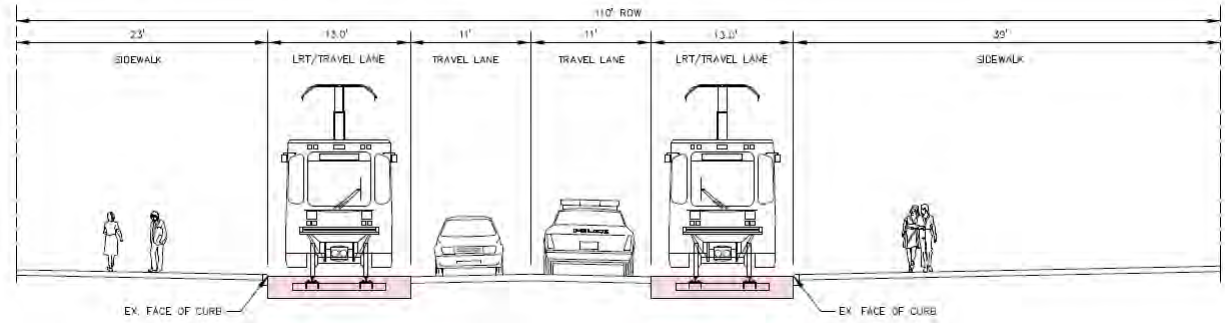

Source: URS Corporation, 2011

Woodward Avenue around Campus Martius Park to Congress Street

Existing roadway width around Campus Martius Park varies greatly. Laneage generally consists of two to three travel lanes around the traffic circle, with right-turn-only lanes onto Woodward

Avenue and other intersection streets. The LRT vehicles would travel in a shared lane running counter-clockwise around Campus Martius in the same direction as vehicular traffic, and then continuing south on Woodward Avenue to Congress Street (Figures 6-4 and 6-5). On the reverse trip, when the LRT vehicles would travel north on Woodward Avenue, the LRT would travel counter-clockwise around Campus Martius in the same direction as vehicular traffic and then continue north.

Figure 6-4.Median-Running Exclusive Lane Cross-Section on Woodward Avenue between Campus Martius Park and Larned Street

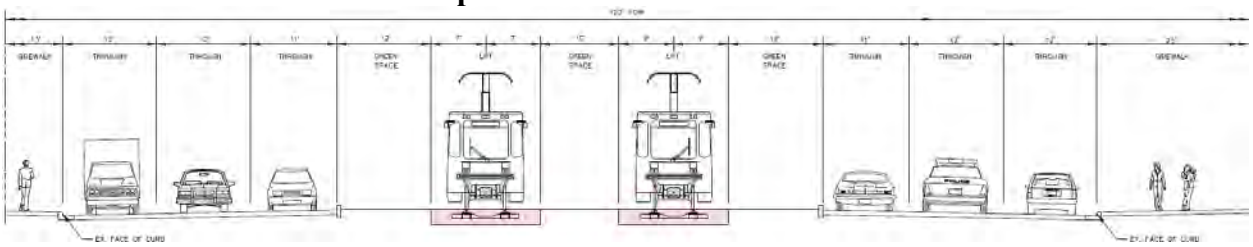

Source: URS Corporation, 2011

Congress Street between Woodward Avenue and Washington Boulevard (~0.2 miles)

Between Woodward Avenue and Griswold Street, the curb-to-curb roadway width of Congress Street is 45 feet, with three 11- to 12-foot-wide travel lanes, and parking on the south side. Between Griswold Street and Washington Boulevard, the curb-to-curb roadway width is 35 feet, with two 12-foot-wide travel lanes, and parking on the south side. The sidewalk width varies throughout the section, with a typical width of approximately 12 feet on the south side, and a width of between 9 and 13 feet on the north side. Congress Street operates one-way westbound. Deliveries are occasionally made on the north side of the street between Griswold Street and Washington Boulevard.

The LRT guideway would run along the south side of the roadway west of Woodward Avenue (Figures 6-6 and 6-7). The LRT rail guideway would occupy an 18-foot-wide lane. As a result, Congress Street would be reduced to two 11-foot-wide general-use lanes between Woodward Avenue and Washington Boulevard. The sidewalk width and curb line on the north side of the roadway between Woodward Avenue and Washington Boulevard would not be affected. However, at station locations, the sidewalk may need to be narrowed by up to four feet.

Figure 6-5. Shared LRT Planview on Woodward Avenue through Campus Martius Park

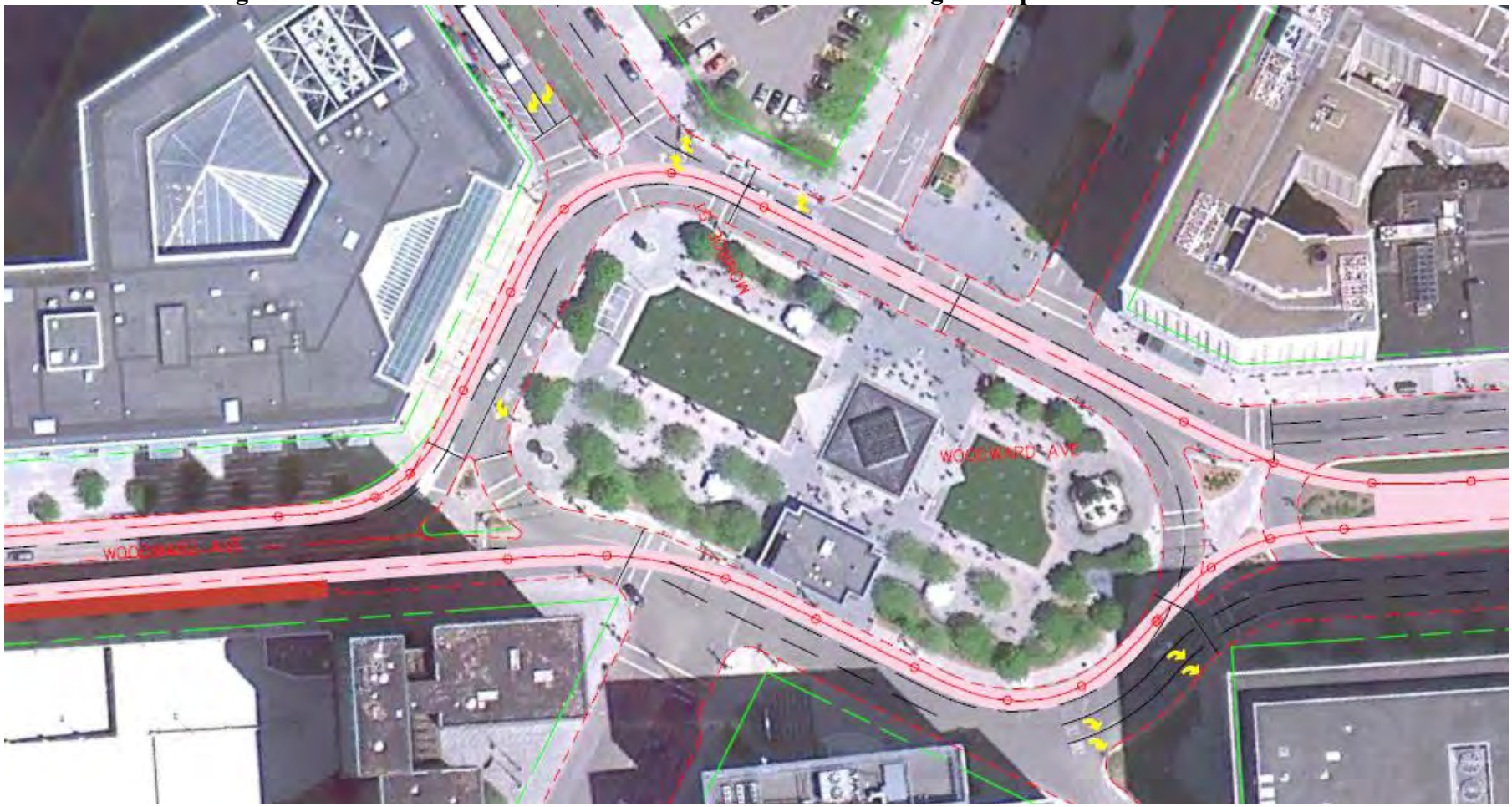

Source: URS Corporation, 2011

Figure 6-6. Curb-running Exclusive Lane Cross-Section at Congress Street/Larned Street with a Station Location

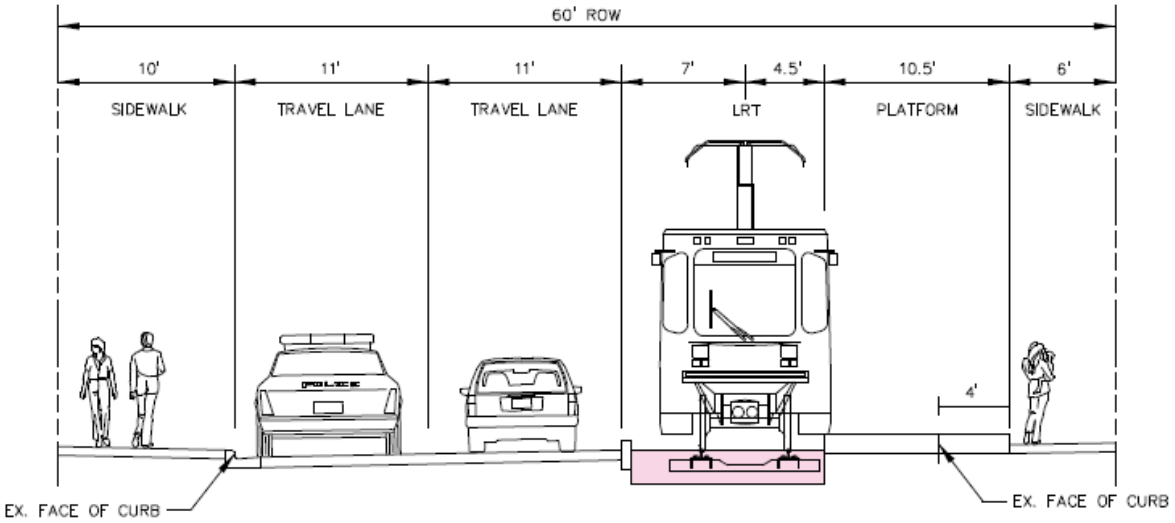

Source: URS Corporation, 2011

Figure 6-7. Curb-running Exclusive Lane Cross-Section at Congress/Larned Street without a Station Location

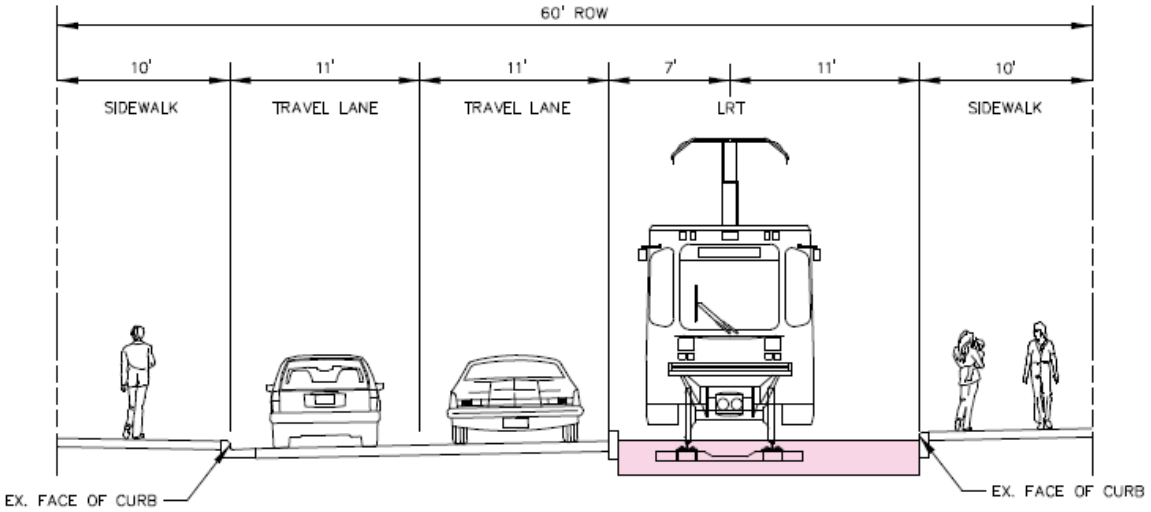

Source: URS Corporation, 2011

Because Congress Street would have only two westbound lanes between Woodward Avenue and Washington Boulevard, one of the existing travel lanes must terminate at Woodward Avenue. The laneage on westbound Congress Street at Woodward Avenue would include a dedicated right-turn-only lane, a through lane and a shared-through/left-turn-only lane.

Washington Boulevard between Michigan Avenue and Larned Street (~0.3 miles)

South of Michigan Avenue, the existing ROW width along Washington Boulevard is approximately 80 feet, with the curb-to-curb roadway width varying from 55 to 60 feet, and the

sidewalks width varying from eight to 12 feet on either side of the road. The roadway consists of two 11- to 12-foot-wide general-use lanes in each direction, and one 11- to 12-foot-wide left-turn-only lane at the signalized intersections.

With the median-running LRT, the roadway would comprise one 10- to 11-foot-wide general-use lane in each direction, one 10-foot-wide left-turn-only lane in one direction at each intersection and a 28-foot-wide LRT rail guideway between the northbound and southbound lanes. With this configuration, the sidewalk may need to be reduced by one to two feet on each side depending on the existing roadway width. Figure 6-8 illustrates the cross-section at one of the signalized intersections with a dedicated left-turn-only lane in one direction.

Figure 6-8. Median-running Exclusive Lane Cross-Section

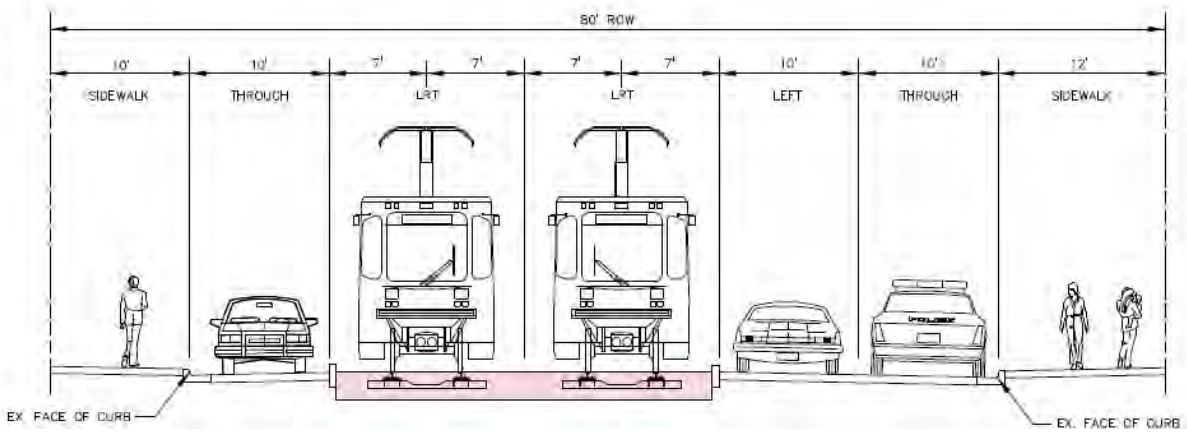

Source: URS Corporation, 2011

An exclusive left-turn-only lane can be accommodated in only one direction. Based on review of existing traffic volumes at each of the intersections along Washington Boulevard in this section of the alignment, the following locations would have exclusive left-turn-only lanes:

- Southbound Washington Boulevard at Lafayette Boulevard
- Northbound Washington Boulevard at Fort Street (M-85)
- Northbound Washington Boulevard at Congress Street
- Southbound Washington Boulevard at Larned Street

Future traffic volumes dictate that a left-turn lane is needed for both northbound traffic at Congress Street and southbound traffic at Larned Street. Therefore, there would be two 11-foot-wide northbound lanes at Congress Street, one a left-turn-only lane and the other a through-lane (Figure 6-8). There would be two 11-foot southbound lanes at Larned Street, one left-turn only lane and one through lane (Figure 6-9).

Figure 6-9. Median-running Exclusive Lane Cross-Section

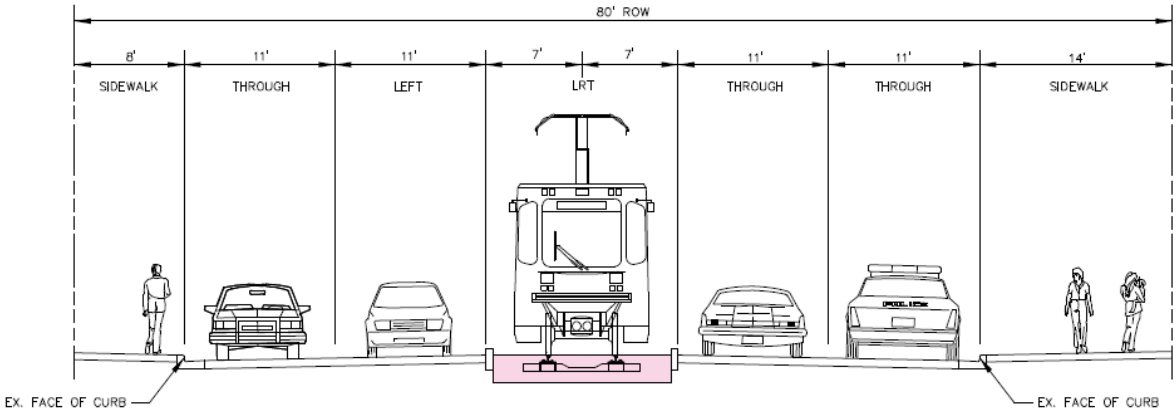

Source: URS Corporation, 2011

Larned Street between Washington Boulevard and Woodward Avenue (~0.2 miles)

The existing ROW along Larned Street is 60 feet wide between Washington Boulevard and Woodward Avenue, with a curb-to-curb roadway width of 40 feet and 10-foot-wide sidewalks on each side. Larned Street operates one-way eastbound and generally has three 10- to 11-foot-wide travel lanes. There is some on-street parking located on the northern side of the roadway west of Griswold Street.

The single LRT guideway would run along the south side of Larned Street and would occupy an 18-foot-wide lane, which would sit alongside two 11-foot-wide general-use lanes. The sidewalk width and curb line on the north side of Larned Street would not change. The sidewalk on the south side of the roadway may need to be narrowed by up to four feet at station locations. Figures 6-6 and 6-7 illustrate the proposed cross-section of Larned Street with and without a station location, respectively.

Woodward Avenue north of Northbound I-75 Service Drive

Between the Northbound I-75 Service Drive and State Fair Avenue, the Woodward Avenue Corridor has three different ROW widths (Table 6-1). Public ROW is defined as the area or property currently owned by the public for vehicle or pedestrian passage or use, and typically has private landowners on each side, which limits the opportunity to widen the existing ROW.

Table 6-1. Right-of-Way and Pavement Width along Woodward Avenue

Section	Right-of-Way Width	Pavement Width
Adams Street to Grand Boulevard	120 feet	90 feet
Grand Boulevard to Manchester Street	100 feet	70 feet
Manchester Street to Midland Street	120 feet	90 feet
Midland Street to McNichols Road	100 feet	70 feet
McNichols Road to State Fair Avenue	204 feet	170 feet*

Source: Michigan Department of Transportation, 2011
*Includes grass median between northbound and southbound lanes

Between Adams Street and Grand Boulevard, and between Manchester Street and Midland Street, the Woodward Avenue ROW is 120 feet. The typical cross-section for median-running

Operating Option A has two general-use lanes (defined as for use by all non-LRT vehicles) in each direction with widths between 11 and 12 feet, 28 feet of exclusive ROW for the LRT, and eight-foot-wide parking lanes on each side of the street for midblock locations without any stations. This typical cross-section fits within the existing 90-foot curb-to-curb pavement width on Woodward Avenue without impact to the existing curb lines or sidewalk widths; therefore, it did not require modification to meet the design principles discussed in Chapter 5.

Between Grand Boulevard and McNichols Road, the Woodward Avenue ROW is predominantly 100 feet wide (with the exception of 0.4 miles between Manchester and Midland streets, noted above). The typical cross-section for the median-running operating option would have two general-use lanes in each direction with individual lane widths of 11 feet; 28-foot width of exclusive ROW for the LRT; no parking on either side of the street; and 14-foot sidewalk width on each side.

North of McNichols Road, the Woodward Avenue ROW is predominantly 204 feet wide with a grassy median between the northbound and southbound lanes. The typical cross-section for the median-running LRT would generally have three general-use lanes in each direction with individual lane widths varying between 12 to 14 feet; 28-foot width of exclusive ROW for the LRT; a 10-foot parking lane on each side; a 12-foot sidewalk on one side; and a 18-foot sidewalk on the other side, with approximately 46 feet for the grassy median.

Intersection Signal Changes

LRT-only signal phases are proposed at the following intersections under the Preferred Alternative:

- Woodward Avenue and Park Avenue / Witherell Street – due to transition
- Woodward Avenue and North Campus Martius – due to lane transition
- Woodward Avenue and South Campus Martius – due to lane transition
- Congress Street / Larned Street and Woodward Avenue – due to turn
- Congress Street / Larned Street and Griswold Street – due to lack of turn lanes
- Congress Street / Larned Street and Shelby Street – due to lack of turn lanes
- Congress Street / Larned Street and Washington Boulevard – due to turn
- Washington Boulevard and Michigan Avenue – due to lack of turn lanes

6.1.2 Station Locations

The Preferred Alternative would have 19 LRT stations within Downtown Detroit and along Woodward Avenue to the Michigan State Fairgrounds, as follows:

- Rosa Parks Station
- Cobo Center Station
- Michigan Avenue / State Street Station
- Grand Circus Park Station
- Foxtown/Stadium Station
- Temple Street Station
- MLK Jr. Boulevard/Mack Avenue Station
- Canfield Street Station
- Warren Avenue Station
- Ferry Street Station

- Piquette Street/Amtrak Station
- Grand Boulevard Station
- Hazelwood Street/Holbrook Street Station
- Calvert Street Station
- Glendale Street Station
- Manchester Street Station
- McNichols Road Station
- 7 Mile Road Station
- State Fair Station

The following describes new stations locations along the alignment that have not be described in the DEIS.

Rosa Parks Station

The Preferred Alternative would begin and end near the Rose Parks Transit Center. The LRT would travel along Washington Boulevard to just north of Michigan Avenue and a transit plaza would be created to provide connectivity between Rosa Parks Transit Center and the LRT station (Figure 6-10). The interaction between the LRT vehicles entering and leaving the station and pedestrians on or crossing Michigan Avenue would be investigated in detail during the design phase of project development. Pedestrian gates and/or warning signs would be utilized to provide a safe pedestrian environment in this area.

Cobo Center Station: Congress Street/Larned Street/Washington Boulevard

This station pair would be located along the south side of Congress Street and Larned Street between Griswold Street and Shelby Street.

Michigan Avenue/State Street Station

The modified Michigan Avenue station from Downtown Design Option 3 is proposed for the Preferred Alternative. This station will have curb platforms on either side of State Street.

Grand Circus Park Station

A center-platform station would be sited at Grand Circus Park (Figure 6-11), where the LRT would operate in a median-running exclusive lane until Park Avenue/Witherell Street, at which point it would transition to operate in a curb-running shared-use lane.

Due to the station's location and the need to preserve the boundaries of Grand Circus Park, left-turn-only lanes could not be accommodated between Adams Street and Park Avenue/Witherell Street. Therefore, left-turn movements for northbound and southbound traffic would be restricted at the intersections of Adams Street and Park Avenue/Witherell Street. Vehicles would travel around Grand Circus Park via Adams Street or Park Avenue/Witherell Street to complete the left-turn movement.

Foxtown/Stadium Station

This would be a median-running station located between the Northbound I-75 Service Drive and Montcalm Street. The signal at Montcalm Elizabeth Street and Woodward Avenue would be changed to a pedestrian-only signal from a fully signalized intersection. This is to provide access

to the station platform north of Montcalm Street, which would be changed to right-in, right-out-only for traffic.

Figure 6-10. Rosa Parks Station Plan View

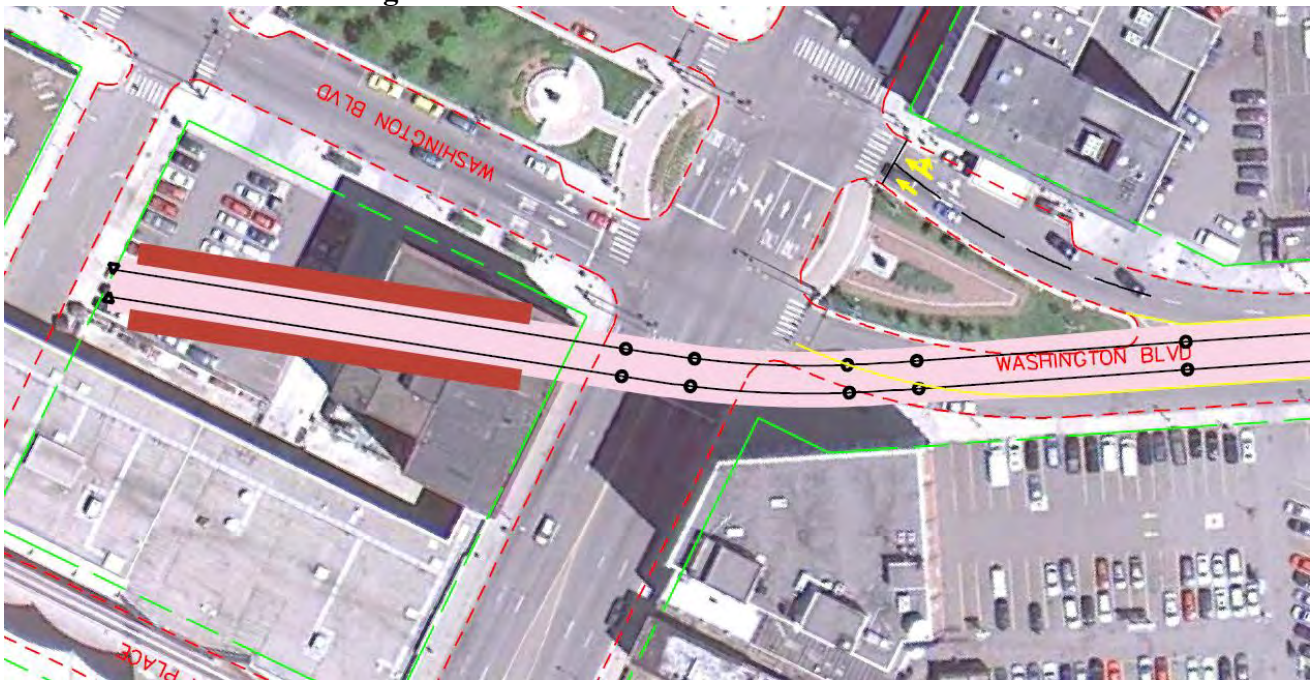

Figure 6-11. Grand Circus Park Center Station

Manchester Street and McNichols Road Stations

The Manchester Street and McNichols Road Stations were relocated to accommodate exclusive left-turn lanes at the intersections of Manchester Street and McNichols Road. Therefore, northbound and southbound exclusive left-turn lanes at Manchester Street and a southbound exclusive left-turn-only lane at McNichols Road were included in the traffic analysis. The exact locations of these two stations will be further refined in a later design phase of the Project.

6.1.3 Park-and-Ride Lot

A park-and-ride lot with approximately 400 spaces would be located near the Shoppes at Gateway development at the southeast corner of 8 Mile Road and Woodward Avenue. A preliminary site-plan of the development, produced for the Shoppes at Detroit's Gateway Park Development Traffic Impact Study (TIS) in May 2010 is shown in Figure 6-12. The surface parking lot or deck for the Preferred Alternative could be located on the northwest corner of the site that fronts on Woodward Avenue and 8 Mile Road.

Figure 6-12. Preliminary Site Plan of Shoppes at Gateway Development

Source: Shoppes at Detroit's Gateway Park Development Traffic Impact Study, May 2010

Trip generation estimates for the park-and-ride lot were generated using rates published in *ITE Trip Generation, Eighth Edition*. For the analysis, the "parking" land use designation was used for determining trip-generation rates for the park-and-ride lot. This land use is designated for

transportation stations that provide park and ride activity, where travelers transfer between private vehicles and LRT. This trip-generation rate is based on a single study completed in Oregon in 1994 and 1995. Table 6-2 summarizes the number of additional vehicular trips generated from the park-and-ride lot.

Table 6-2. Park-and-Ride Lot Trip Generation

Time Period	Trip Rate	Total Trips	Entering Trips	Exiting Trips
Morning Peak Hour	1.07	428	342 / 80%	86 / 20%
Evening Peak Hour	1.24	496	288 / 58%	208 / 42%

Source: Parsons Brinckerhoff, 2011

Trip distribution of the vehicles traveling to and from the park-and-ride lot was based on the TIS, which based trip distribution on existing travel patterns in the area. It was assumed that all new trips would come from the north, east, or west and there would be no trips coming from the south. As a result, the TIS' trip distribution was adjusted for this analysis. Table 6-3 provides the trip distribution for trips generated by the proposed park-and-ride lot.

Table 6-3. Trip Distribution Percentages

Direction from/to	Morning Peak Hour		Evening Peak Hour	
	Percent Entering From	Percent Exiting To	Percent Entering From	Percent Exiting To
North (Woodward Ave)	38%	24%	40%	32%
West (8 Mile Rd)	27%	43%	32%	40%
East (8 Mile Rd)	35%	33%	28%	28%

Source: Parsons Brinckerhoff, 2011

The trips forecast was then distributed to the roadway network. Table 6-4 summarizes the number of trips by direction of travel. The trip distribution was based on the following access assumptions (numbered Drives in the development are shown on Figure 6-12):

- Trips coming from the north would travel southbound on Woodward Avenue, turn left onto 8 Mile Road, and then use Drive 3 of the development to access the lot.
- Trips going to the north would use Drive 2 to exit the lot.
- Trips coming from the east would use Drive 5 on 8 Mile Road to access the lot.
- Trips going to the east would use Drive 3 to exit the lot.
- Trips from the west would use Drive 3 to access the lot.
- Trips going to the west would use Drive 2 to exit the lot onto northbound Woodward Avenue and turn left onto 8 Mile Road.

These trips were added to the future 2030 traffic forecast (Appendix G of this report).

6.1.4 Other Alignment and Operations Elements

Two railroad bridges near Piquette Street in the City of Detroit, and the single railroad bridge near Bartlett Street within the City of Highland Park were built in the same general timeframe and have similar designs.

Table 6-4. Park and Ride Trip Distribution

Direction	Morning Peak Hour		Evening Peak Hour	
	Number of Vehicle Trips From	Number of Vehicle Trips To	Number of Vehicle Trips From	Number of Vehicle Trips To
North (Woodward Ave)	130	21	115	67
West (8 Mile Rd)	92	37	92	83
East (8 Mile Rd)	120	28	81	58
Total	342	86	288	208

Source: Parsons Brinckerhoff, 2011

A preliminary roadway and rail guideway profile at the railroad bridges was developed to provide a minimum under-clearance of 14.75 feet for the Woodward Avenue general-use lanes and 15.5 feet for the median-running LRT. In addition to providing the required clearances, it would be desirable to maintain right-in/right-out access between Endicott and Baltimore Streets and Woodward Avenue. The under-clearance, which is the distance from the bottom of the railroad bridge to the existing roadway pavement, is greater at the outside edges of the existing pavement than at the center of the roadway due to the parabolic crown, which facilitates drainage from the center to the curblines of the road. The proposed Woodward Avenue profile for the vehicular roadway only needs to be lowered a few inches to meet the desired under-clearance of 14.75 feet. Additional lowering of the roadway under the railroad structures on the outside is limited due to the shallow depth of the existing spread footings for the railroad bridge structure. Figure 6-13 illustrates the proposed profile of the roadway and rail guideway, as well as the probable location of the spread footings of the bridges.

Figure 6-13. Profile of Woodward Avenue Under the Railroad Bridges

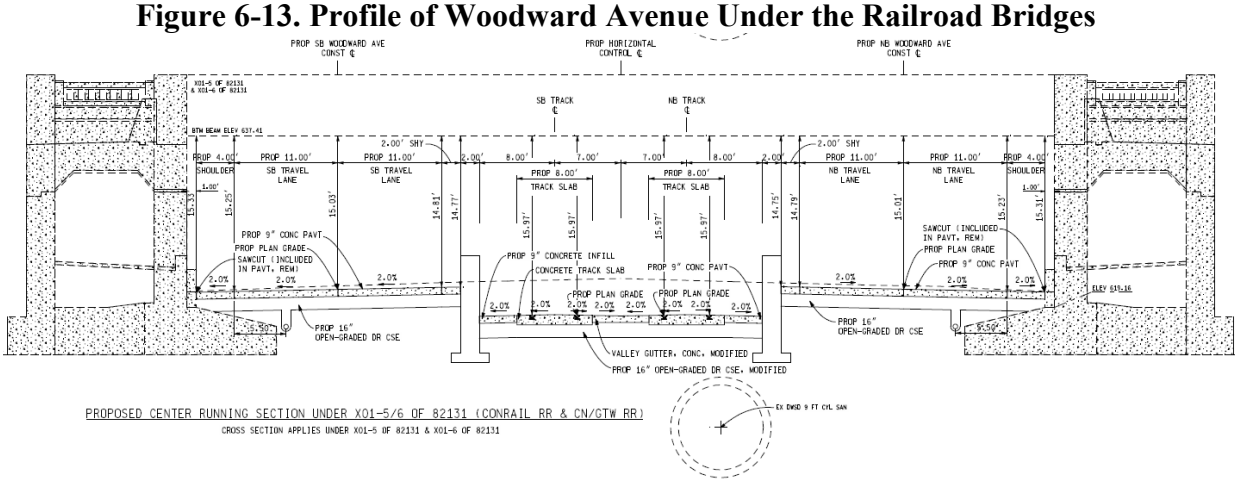

Source: URS Corporation, 2011

The proposed roadway profile has a crest-sag-crest (up-down-up) combination with a design speed of approximately 20 miles per hour (mph) under the railroad structures, with grades of 4.2 and 5.9 percents. To meet the desired median-running LRT under-clearance, the proposed track

profile was lowered approximately 1.2 feet under the railroad structures. However, the desirable vertical curve length and grade limitations for the LRT results in a track profile approximately 5.2 feet below the existing grade just north of the railroad structures. The lowering of the track profile in the median should be coordinated with the final exposed depth of the existing 9-foot Detroit Water and Sewerage Department (DWSD) sewer that runs underneath the Woodward Avenue roadway. The proposed track profile has a crest-sag-crest (up-down-up) combination with a 400-foot radius sag (down) vertical curve under the railroad structures, with grades of 4.0 and 3.9 percents.

To accommodate the grade differential between the proposed road and track profile, the proposed design would incorporate two new retaining walls, each approximately 750 feet long on either side of the track section. The maximum height differential between the top of road surface and top of track surface is approximately 5.2 feet. Since the posted speed of Woodward Avenue is 30 mph in this section, according to the 2006 AASHTO *Roadside Design Guide* (8.2.14), attenuation is not necessary. Instead, a sloped concrete end treatment could be utilized to introduce the walls. The ends of the retaining walls would be sloped from zero height (the existing roadway surface) to full height over a 12.5-foot distance. However, if attenuation is desired, an in-line attenuator could be installed.

Beyond the limits of the retaining wall, a proposed MDOT E-curb island has been included to delineate the vehicular travel lanes from the median-running LRT, which is permitted by MDOT (MDOT *Road Design Manual* 6.06.06 C). The final shape and size of the curb would be determined during the preliminary design phase of project development. A two-foot distance would be provided between the vehicular travel lanes and the base of the retaining wall or curbed islands. The proposed design would prohibit through or left-turn movements at Endicott Street and Baltimore Street. Because of this change in access, the signal at Baltimore Street would be removed. However, right-in/right-out movements would be possible, as the proposed road profile would match the existing grade at these two cross streets. The curbed island would end before the intersection at Amsterdam Street/Piquette Street and at Milwaukee Street, allowing movements in all directions. Due to the change of vertical grade between Amsterdam Street to Baltimore Street, a station would not be feasible north of Amsterdam Street. As a result, the station would need to move south of Piquette Street.

Appendix H provides conceptual plans, profiles, and typical sections for the median-running LRT alignment for the railroad bridges near Piquette Street. These conceptual plans, profiles and typical sections would be similar for the railroad bridge near Bartlett Street in Highland Park.

The currently signalized intersection at Woodward Avenue and Kirby Street is near the Detroit Library, Detroit Institute of Arts, Detroit Historical Museum, and the recently constructed Midtown Loop. Due to the proximity of these institutions, the signal will remain with the Preferred Alternative.

6.2 Transit Service, Safety, and Security

The Preferred Alternative's median-running LRT would be constructed in the center of Woodward Avenue. The LRT would replace the Express Route 53 bus service (assumed in the No Build Alternative). The transit service concept with the Preferred Alternative incorporates the following elements:

- Woodward Avenue LRT would operate with 10-minute headways during the morning and evening peaks and 15-minute headways during off-peak hours.
- The schedule for Route 53 (Woodward Local) bus service would be revised to 15-minute service all day; alternating Route 53 service would be extended northward to central Oakland County.
- Off-peak service and bi-directional service would be provided for all bus routes along Woodward Avenue, and hours of operation would be expanded.
- Service mileage extensions on Routes 17, 41, and 43, as identified in DDOT's 5-Year Service Plan, would be incorporated.
- Schedules of Routes 8, 14, 17, 32, and 43, which would feed LRT stops, would be adjusted to coordinate bus and LRT services.
- A park-and-ride facility, with 400 parking spaces, would be provided at the proposed development on the southeast corner of 8 Mile Road and Woodward Avenue (see Section 6.1.3).

The proposed LRT services, combined with bus services along Woodward Avenue, would result in transit service with six-minute headways in the morning and evening peak periods, and seven and one-half-minute headways in the off-peak period, including weekends. Compared to the No Build Alternative, this would result in increases in frequency of 25 percent in peak inbound, 67 percent in peak outbound, and 33 percent in off-peak weekday transit trips. As with the No Build Alternative, DDOT Route 53 along Woodward Avenue is assumed to serve the Rosa Parks Transit Center, then continue southward to serve the Renaissance Center via a loop on Larned Street and Jefferson Avenue. For the purposes of modeling, SMART routes using Woodward Avenue were not modified, as those routes bypass the Rosa Parks Transit Center.

For the purposes of modeling ridership with the Preferred Alternative, the Woodward Local Bus was assumed to operate so that every other bus proceeds northward along Woodward Avenue and into central Oakland County.

The median-running LRT would operate at the posted speed limit of the roadway on which it is travelling. Within Downtown Detroit, the posted speed limit on all roadways in 25 miles per hour (mph) south of Adams Street and 30 mph north of Adams Street. However, the LRT would not exceed 15 mph due to short spacing between stations and curves in the Downtown segment of the Preferred Alternative.

Station design features would include lighting and security systems to enhance passenger safety and security. In case of emergency, the operator of the LRT would notify a dispatcher, who would then notify City police, similar to the existing emergency procedures followed by bus operators. Local police would also patrol the LRT stations and vehicles. Informational and educational safety campaigns for drivers, students, pedestrians, cyclists, and transit users would begin prior to construction of the LRT.

6.3 Non-Motorized Facilities and Safety

6.3.1 Non-Motorized Facilities

On August 1, 2010, Governor Granholm signed into law the Complete Streets legislation, which amends Public Act 51 of 1951 governing the expenditure of State transportation funding. This

legislation requires MDOT to adopt a Complete Streets policy within two years (by August 1, 2012). A "Complete Street" is defined as a roadway designed to support legal users, including pedestrians, bicyclists, motorists, and public transportation users. Woodward Avenue from Adams Avenue to State Fair Avenue is under MDOT's jurisdiction; therefore, the impacts to all users must be considered in the evaluation of this corridor. The following is an overview of considerations for both pedestrians and cyclists conducted as part of this evaluation.

Pedestrian Facilities

Pedestrian mobility within the Woodward Avenue Corridor is largely defined by two key measures: continuity and widths of sidewalks, and designated locations to cross Woodward Avenue. While the design principles outlined in Chapter 5.0 provide for a minimum sidewalk width to assure sufficient pedestrian space, the number of crossing locations would be impacted by the proposed removal of signals along the study corridor.

Within Downtown, the signal at Montcalm Street and Woodward Avenue would be changed to a pedestrian-only signal from a fully signalized intersection with the LRT. This is to provide access to the Foxtown/Stadium Station north of Montcalm Street, which is proposed to become right-in, right-out-only for traffic. Pedestrian crossing times in Downtown are not expected to increase with the Preferred Alternative. Along Woodward Avenue, north of Downtown, the following eight signals would be removed with the Preferred Alternative, listed from south to north in order to improve LRT travel time:

- Sibley Street/Woodward Avenue
- Charlotte Street/Woodward Avenue
- Peterboro Street/Erskine Street/Woodward Avenue
- Baltimore Avenue/Woodward Avenue
- Seward Street/Marston Street/Woodward Avenue
- Cortland Street/Woodward Avenue*
- Grand Street/Woodward Avenue*
- Gerald Street/Woodward Avenue*

(* = Intersections in the City of Highland Park)

Traffic signals would be installed at four locations:

- Woodward Avenue/Amsterdam Street/Piquette Street
- Southbound Woodward Avenue/Hollywood Avenue
- Northbound Woodward Avenue/Carmel Street
- Southbound Woodward Avenue/Strathcona Drive

These signals are recommended for installation at median crossovers that will cross the LRT tracks. The signal at Amsterdam Street/Piquette Street is recommended to provide pedestrian access to the proposed station in this area. These signals would also include signalized crosswalks, which would reduce the crossing time required for pedestrians.

Table 6-5 summarizes the distance and approximate walking time for a pedestrian to cross the street from mid-block on one side of Woodward Avenue to mid-block on the other side of Woodward Avenue.

With the median-running LRT, the time it would take a pedestrian to cross Woodward Avenue safely at a signalized intersection would increase at some locations. This increased walk-time

may motivate pedestrians to jaywalk at the newly unsignalized intersections, which may increase pedestrian/vehicle or pedestrian/LRT conflicts.

Table 6-5. Maximum Walking Distance

From Street	To Street	Maximum Distance/Time to Cross the Street		
		feet	miles	minutes
Southbound I-75 Service Dr	MLK Jr. Blvd/Mack Ave	2,940	0.56	13.5
MLK Jr. Blvd/Mack Ave	Parsons St	370	0.07	2.5
Parsons St	Alexandrine St	840	0.16	4.5
Alexandrine St	Canfield St	850	0.16	4.5
Canfield St	Forest Ave	850	0.16	4.5
Forest Ave	Warren Ave	860	0.16	4.5
Warren Ave	Farnsworth St	410	0.08	3
Putnam St/Farnsworth St	Kirby St	810	0.15	6.0
Kirby St	Palmer St	895	0.17	4.0
Palmer St	WB I-94/Antoinette St	810	0.15	4.5
WB I-94/Antoinette St	Piquette St	980	0.19	5
Piquette St	Milwaukee St	1,000	0.19	5
Milwaukee St	Grand Blvd	460	0.09	3
Grand Blvd	Bethune St	860	0.16	4.5
Bethune St	Euclid St	1,930	0.37	9
Euclid St	Hazelwood St/Holbrook St	1,630	0.31	8
Hazelwood St/Holbrook St	Clairmount St/Owen St	670	0.13	4
Clairmount St/Owen St	Chicago Blvd/Arden Park Blvd	1,450	0.27	7
Chicago Blvd Arden Park Blvd	Calvert St/Trowbridge St	1,240	0.23	6
Calvert St/Trowbridge St	Tuxedo St/Tennyson St	1,680	0.32	8
Tuxedo St/Tennyson St	Glendale St	2,140	0.41	10
Glendale St	Buena Vista St	900	0.17	5
Buena Vista St	EB M-8	830	0.16	4.5
EB M-8	WB M-8	260	0.05	2
WB M-8	Manchester Pkwy	1,370	0.26	6.5
Manchester Pkwy	Sears St	1,070	0.20	5.5
Sears St	Ferris St/Pilgrim St	1,360	0.26	6.5
Ferris St/Pilgrim St	McNichols Rd	1,910	0.36	9
6 Mile Rd	Merrill Plaisance St	1,020	0.19	5.5
Merrill Plaisance St	Nevada St	1,300	0.25	6.5
Nevada St	Grixdale St	1,600	0.30	7.5
Grixdale St	Hollywood	1,270	0.24	6.5
Hollywood	7 Mile Rd	690	0.13	4
7 Mile Rd	Carmel St	1,260	0.24	6.5
Carmel St	Strathcona Dr	1,050	0.20	5.5
Strathcona Dr	State Fair Ave	600	0.11	3.5
State Fair Ave	State Fair Bus Loop	870	0.16	4.5

Source: Parsons Brinckerhoff, 2011

*Based on four feet/second walking speed and one minute to wait for the signal to cross the street

Signalized crosswalks should be considered in locations where a signal would be removed and, thus, increase the distance to safely cross Woodward Avenue. Unsignalized crosswalks across all four lanes of Woodward Avenue are not recommended, based on FHWA's study entitled "Safety Effect of Marked vs. Unmarked Crosswalks at Uncontrolled Locations: Executive Summary and Recommended Guidelines" (2002). However, unsignalized crosswalks could be considered for crossing two lanes of Woodward Avenue, such as at a station location or a median refuge area, if the latter is provided.

Crosswalks should be spaced every half mile, or every 2,600 feet. Generally, a conservative use of crosswalks is preferred. It is recommended that, in situations where marked crosswalks alone are acceptable, they be used at locations with a minimum of 20 pedestrian crossings per peak hour (or 15 or more elderly and/or child pedestrians per peak hour), or a total of 60 pedestrian crossings during the highest consecutive four-hour period. Crosswalks are also recommended at direct routes to or from a pedestrian generator, such as a school, library, hospital, senior center, shopping center, park, employment center, and transit center or service. In all cases, good engineering judgment should be applied by reviewing existing pedestrian crossings and the land uses along the Corridor.

Signalized pedestrian crosswalks should not be installed near traffic signals since, in most situations, pedestrians should be encouraged to cross at the traffic signal. The minimum distance between a traffic signal and a marked signalized crosswalk is approximately 300 feet, according to the Michigan Manual of Uniform Traffic Control Devices (MMUTCD). The objective of adding a marked crosswalk is to channel pedestrians to safer crossing points. However, pedestrian crossing behavior may be difficult to control merely with the addition of marked crosswalks. The new marked crosswalk should not unduly restrict platooned traffic and should be consistent with marked crosswalks at other unsignalized locations in the area.

There are no current guidelines for how often a mid-block crosswalk should occur along a corridor. Generally, in densely populated areas, marked crosswalks are recommended at least every one-quarter mile, or every 1,300 feet. In less dense areas (e.g., north of McNichols Road), marked crosswalks should be considered every one-half mile, or every 2,600 feet.

Consideration of a signalized crosswalk, signalized intersection or unsignalized median platform crosswalk should be given between the following intersections:

- Southbound I-75 Service Drive and MLK Jr. Boulevard/Mack Avenue
- Bethune Street and Euclid Street
- Tuxedo Street/Tennyson Street and Glendale Street

The distance to walk north of McNichols Road to reach a signalized crossing location would be less with the Preferred Alternative's median-running operation than it is today, due to placement of more signals along Woodward Avenue between McNichols Road and State Fair Avenue. Between Grand Boulevard and McNichols Road, two signals would be removed at Gerald Street and Grand Street, which would increase the walking distance by less than one-quarter mile.

All crosswalks accessing the LRT station platforms would be at signalized intersections with appropriate pedestrian signal heads. At this time, there are no proposed mid-block crosswalks along the Woodward Avenue Corridor other than at a station location. However, additional analysis may be conducted during the preliminary design phase of project development to determine if and where signalized or unsignalized crosswalks may be needed.

It is recommended that a signal warrant analyses be conducted during the preliminary design phase of project development at each of the eight locations where signals are proposed to be removed; the purpose of the analysis is to determine if the signals are still warranted by vehicular or pedestrian traffic. Discussion between MDOT and the City of Detroit regarding the removal of these signals should continue. If these signals are not warranted by vehicular or pedestrian volumes, mid-block crossings may be needed at some locations to mitigate the impact of signal removal on pedestrian crossing distances.

Bicycle Facilities

As discussed in Chapter 3.0, there are currently no designated bicycle lanes or bicycle routes within Downtown Detroit. Due to narrow roadway widths, the addition of bicycle lanes in Downtown Detroit is not feasible. However, the speed limit within Downtown Detroit is 25 mph, and the average vehicle speed is expected to be less than 25 mph. The lower speeds in Downtown Detroit make it easier for cyclists to mix with vehicle traffic safely, and bicycle lanes may not be necessary to improve safety conditions. LRT vehicle and bicycle conflicts would occur whenever a bicycle crosses the LRT path, either when the cyclist is turning left or the LRT vehicle route makes a right-hand turn.

There are currently no designated bicycle lanes or bicycle routes along Woodward Avenue within the Project limits. Consideration was given to adding bicycle lanes to the median-running LRT's cross-section to better serve cyclists along the Woodward Avenue Corridor.

However, accommodation of bicycle lanes within the existing curb-to-curb width of Woodward Avenue, while maintaining other proposed lane uses within the cross-section, would require that travel-lane widths be narrowed to less than 11 feet, which would violate an agreed-upon design principle (see Chapter 5.0). In addition, it would be necessary to move curb lines, reducing sidewalk width and adding significantly to Project costs.

In the 120-foot-wide ROW section, removing the parking lane or a general-use lane could provide enough room for a five-foot bicycle lane in each direction without moving the curb line. However, removing a general-use lane would reduce Woodward Avenue to one lane for vehicle traffic, which again would violate an agreed-upon design principle. Removing a parking lane would have a significant impact on local businesses.

Within the 100-foot-wide ROW along the 2.8-mile alignment section between Grand Boulevard and Manchester Boulevard, the inclusion of a five-foot bicycle lane in each direction would require maintaining the existing 10-foot-wide travel lanes and reducing the sidewalk width (currently between 10 and 14 feet) by a total of three feet in each direction of travel. Reducing the lane width or sidewalk width would violate agreed-upon design principles. This accommodation would also involve moving the curb line, which would add significantly to Project costs. Another option in this area would be to remove the outside general-use lane. However, removing a general-use lane would reduce Woodward Avenue to one lane for non-LRT traffic, which would also violate the agreed-upon design principles. Therefore, it was determined that the addition of bicycle lanes to the median-running cross-section would not be feasible, and it was eliminated from further consideration.

However, while bicycle lanes could not be accommodated within the median-running cross-section, a number of options to better accommodate bicycle traffic should be considered during the preliminary design phase of project development. These options are described below.

Alternative Routes

There are a number of nearby parallel routes to Woodward Avenue along its corridor, although none of them is contiguous between Adams Avenue and State Fair Avenue. One option to provide bicycle accommodations in the study corridor would be to provide bicycle facilities on these adjacent streets, rather than on Woodward Avenue. While this would be an improvement in bicycle accommodation in the overall study corridor, it would not necessarily address safety concerns on Woodward Avenue. According to the State of Michigan *Vehicle Code*, bicycles would still be permitted on Woodward Avenue and would still travel in the right-most lane. Some cyclists may opt to use the adjacent routes if bicycle lanes are added to parallel roadways. However, under current State law, there is no way to enforce which roads cyclists choose to use.

Shared Bicycle/Vehicle Lanes

An 11-foot shared vehicle/bicycle lane with shared lane marking in the rightmost lane would not require any changes to the LRT footprint or the curb. The MUTCD standard marking (Figure 6-14) can be used in conjunction with a "Share the Road" sign (W16-1P) or other regulatory signs. Bicycles would still be required by the State of Michigan Vehicle Code to "ride as close as practicable to the right-hand curb or edge of the roadway." The shared-lane markings and "Share the Road" signs help bicyclists to know where to ride and, more importantly, help motorists know where to expect to see bicyclists. The addition of shared-lane markings would also address the designation of Woodward Avenue as a regional connector in the City of Detroit Non-Motorized Urban Transportation Master Plan.

Figure 6-14. Shared Lane Marking

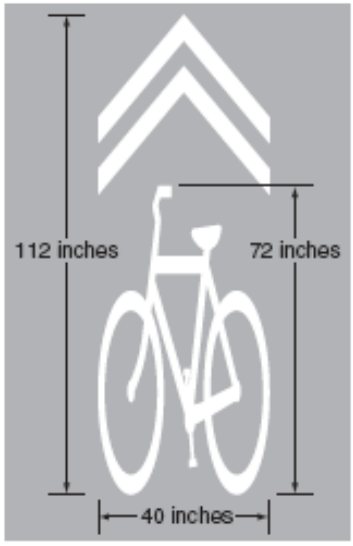

The LRT vehicles would allow for up to four bicycles to be transported on them. In addition, it is anticipated that all LRT stops would be designed to include bicycle racks allowing users to bike to and from the stations or to take their bicycle along on the LRT train.

6.3.2 Non-Motorized Safety

It has not yet been determined whether there would be a barrier separating the LRT from vehicular traffic (which would discourage pedestrian mid-block crossing). As discussed in Section 6.3.1, the proposed removal of eight traffic signals would increase the time it would take a pedestrian to safely cross Woodward Avenue at a signalized crossing. This may motivate pedestrians to jaywalk at the now-unsignalized intersections, which may increase pedestrian/vehicle or pedestrian/LRT conflicts. Without a barrier, the presence of the LRT median, when unoccupied by an LRT vehicle, would provide a refuge for pedestrians attempting to cross Woodward Avenue in stages. With a barrier, pedestrians would cross in more controlled locations, which would provide for a safer pedestrian crossing environment.

Even without the installation of bicycle lanes, the Project would have some positive impacts on the cycling environment. The average vehicle speed on Woodward Avenue is expected to

decrease from 34.5 mph to 21.1 mph for southbound traffic during the morning period, and from 29.4 mph to 17.5 mph for northbound traffic in the evening. This reduction in average speeds should make it easier for cyclists to mix safely with vehicular traffic. With the median-running LRT, the only anticipated conflicts between LRT vehicles and bicycles would occur when a bicyclist turns left across the LRT tracks. Lastly, the addition of a LRT facility may be an environmental benefit by providing another mode for bicyclists and accommodates bicyclists, thereby aiding in reducing conflicts between bicyclists and pedestrians and motorists.

6.4 Motor Vehicle Safety

Within Downtown Detroit, there is likely to be more interaction between LRT vehicles and other vehicles due to the narrower roadway widths and the likelihood that it will be necessary for the rail guideway to be level with the adjacent general-use lane. Separation between the rail guideway and the general-use lane may be confusing to motorists along these roadways, causing an increase in sideswipe crashes. Mitigation for this may include the addition of colored pavement treatments for the rail guideway or of bollards between the LRT guideway and the general-use lane to let motorists know that the rail guideway is for the train only. Conflicts between LRT vehicles and other vehicles may also occur in locations where the LRT vehicle crosses other vehicle paths to make a turn. At these locations, an LRT-only phase is proposed to be added to the traffic signal.

The median-running LRT would include an exclusive median-running guideway from Adams Street to State Fair Avenue, which may or may not be barrier separated from vehicular traffic. All unsignalized intersections would be right-in/right-out-only and left-turn movements across the tracks would not be permitted.

As discussed in Chapter 3.0 of this report, there were 64 sideswipe, head-on, and left-turn crashes between signalized intersections between 2005 and 2008. The median-running LRT operation would reduce these types of crashes, as the LRT would separate the northbound and southbound lanes of motor vehicle travel.

All intersections where an exclusive left-turn lane is proposed would have lagging protected left-turn phases, meaning a green-arrow indication would lag, or follow, the through-traffic phase for Woodward Avenue. A protected left-turn phase would reduce the potential for angle and head-on left-turn crashes on Woodward Avenue.

For the two critical crash locations (the intersections of Woodward Avenue with Mack Avenue/MLK Jr. Boulevard and Warren Avenue) identified within the study corridor, it is recommended that left-turn lanes be designed, during the Project's design phase, for turns from MLK Jr. Boulevard/Mack Avenue onto Woodward Avenue. The design could either align the lanes across the intersection or provide a positive offset, reducing the potential for head-on left-turn crashes at this intersection.

It is also recommended that direct left-turns off Warren Avenue onto Woodward Avenue be changed to indirect left-turns. Eliminating the direct left-turns from Warren Avenue onto Woodward Avenue would reduce the potential for head-on left-turn crashes on Warren Avenue. Vehicles intending to turn left would be required to go through the intersection at Woodward Avenue and execute a u-turn at a crossover, which would be constructed on either side of Woodward Avenue. In conjunction with this proposed left-turn treatment, intersection operations would need to change at the intersection of Cass Avenue and Warren Avenue due to

an updated crossover between Woodward Avenue and Cass Avenue. Currently, direct left-turns are prohibited from Cass Avenue or Warren Avenue. It is recommended that direct left-turns be allowed from Cass Avenue onto Warren Avenue, and left-turn lanes be installed to accommodate this movement. It is also recommended that the eastbound left-turn movement be allowed, but that the westbound left-turn movement continue to be prohibited to eliminate any offset conflicts. Some of the parking along Warren Avenue between Cass Avenue and John R Street may need to be removed.

With a semi-exclusive median-running LRT, the only interaction between the LRT vehicles and motor vehicles would be at signalized intersections. In particular, vehicles operating parallel to the LRT and turning left across the tracks, as well as vehicles queuing on the tracks during peak hours, are listed as two of the top safety issues in TCRP Report 173 (2009). According to the report, education and enforcement programs can be used to train LRT vehicle operators and motorists on proper behavior. Physical treatments in the field, such as static warning signs or active train warning signals that alert drivers to the presence of an LRT vehicle, may be used to address left-turning safety issues.

6.5 Parking

With the Preferred Alternative, the number of parking spaces along Woodward Avenue would be reduced (Table 6-6). The number of future parking spaces was calculated based on drawings of the alignment, including LRT station areas, typical cross-sections and transition areas. An average parking-space length of twenty feet was used to calculate the number of on-street parking spaces from the drawings; however, the total number of parking spaces may vary due to locations of bus stops, fire hydrants and driveways. These parking estimates are preliminary and would be assessed further during the preliminary design phase of project development.

The number of parking spaces in the Future No-Build is expected to be the same as existing. A net decrease of 156 parking spaces along the alignment is anticipated with the Preferred Alternative. Very limited parking would be available on Woodward Avenue between Grand Boulevard and McNichols Road. Approximately 413 parking spaces would be removed in this area, of which only two are metered. However, up to 454 on-street parking spaces may be added between McNichols Road and 8 Mile Road.

Table 6-6. Existing and Estimated Parking Spaces for the Preferred Alternative

Section	Existing			Option A4	Net Change
	Metered	Non-Metered	Total		
Larned between Washington and Griswold	12	0	12	0	-12
Larned between Griswold and Randolph	0	0	0	0	0
Randolph between Congress and Larned	14	0	14	14	0
Congress between Randolph and Griswold	0	3	3	3	0
Congress between Griswold and Washington	17	0	17	0	-17
Washington between Michigan and Larned	2	0	2	0	-2
Washington between State and Michigan	15	0	15	15	0
Washington between Grand River and State	40	0	40	40	0
Grand River between Woodward and Washington	7	0	7	7	0

Table 6-6. Existing and Estimated Parking Spaces for the Preferred Alternative

Section	Existing			Option A4	Net Change
	Metered	Non-Metered	Total		
State between Woodward and Washington	0	0	0	0	0
Woodward between Larned Street and Campus Martius	3	0	3	0	-3
Woodward between Campus Martius and State	6	0	6	0	-6
Woodward between State and Grand River	8	0	8	8	0
Woodward between Grand River and Adams	10	0	10	10	0
Woodward between Adams and I-75	0	0	0	0	0
Woodward between I-75 to Alexandrine	26	111	137	119	-18
Woodward between Alexandrine to Kirby	66	79	145	71	-74
Woodward between Kirby to Piquette	41	27	68	49	-19
Woodward between Piquette to Grand	27	19	46	0	-46
Woodward between Grand to Clairmount	2	124	126	0	-126
Woodward between Clairmount to McLean	0	187	187	0	-187
Woodward between McLean to Sears	0	81	81	29	-52
Woodward between Sears to McNichols	0	48	48	0	-48
Woodward between McNichols to 7 Mile	0	98	98	321	+223
Woodward between 7 Mile and 8 Mile	0	27	27	258	+231
Total	**296**	**804**	**1,100**	**944**	**-156**

Source: DTOGS Locally Preferred Alternative Report, April 2009

The locations where parking would be removed and not replaced within Downtown Detroit and along sections of Woodward Avenue are discussed below. The number of first-floor active businesses along Woodward Avenue, impacts to parking near such businesses and potential mitigation for such impacts are also discussed. Appendix I of this report provides details on each active business location (as of March 2011); identifies whether on-street parking would be located along Woodward Avenue in front of a given business with the Preferred Alternative; and identifies whether the business has an adjacent parking lot. If a business location would lose existing on-street parking along Woodward Avenue and does not have an adjacent parking lot, measures to mitigate the impact are discussed. For business locations that do not have existing on-street parking, it is assumed that mitigation is not necessary. The metering of new or currently unmetered parking spaces would be determined in the Project's future design phases.

6.5.1 Parking within Downtown Detroit

Along all the Project alignments, there is a total of 137 parking spaces within Downtown Detroit. With the Preferred Alternative, there would be a total of 97 parking spaces, resulting in a net loss of 40 spaces within Downtown Detroit.

There are currently more than 29,000 parking spaces available in public parking structures in Downtown Detroit (Figure 6-15). Current parking rates range from $1 per hour for metered on-street parking and up to $4 per hour within parking structures. According to the City of Detroit Municipal Parking Department, which operates six of these garages, the average weekday utilization of the garages ranges from 50 to 75 percent, varying by location of facility. Given

these utilization rates, it is likely that these public parking structures, supplemented by on-street parking within one block of locations where parking spaces would be lost and other available surface parking lots would have adequate available parking within Downtown Detroit to offset parking space losses. The cost to park may increase over time due to the reduction of on-street parking availability within Downtown.

6.5.2 Parking along Woodward Avenue from I-75 to Kirby Street

Within this section of Woodward Avenue, there are currently 282 parking spaces, of which 92 are metered. It is anticipated that 92 parking spaces would need to be removed between I-75 and Kirby Street, leaving 190 spaces.

Figure 6-15. Existing Parking Structures Located Within Downtown Detroit

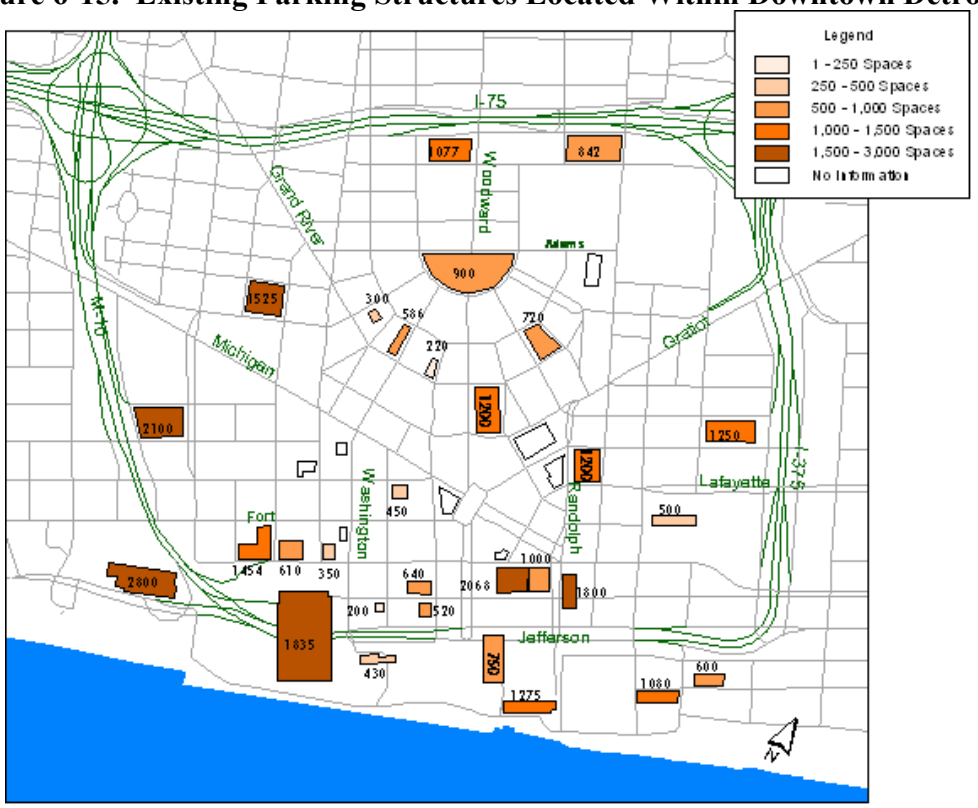

Source: Downtown Detroit Transportation Master Plan, 2004

Between I-75 and Alexandrine Street, there are currently 137 parking spaces, 26 of which are metered. With the Preferred Alternative, it is expected that this area would lose 18 parking spaces.

There are currently 145 parking spaces between Alexandrine Street and Kirby Street, 66 of which are metered. Some of the on-street parking would be eliminated in this section, resulting in 71 total spaces.

There are currently 28 and 37 active businesses located on the east and west sides, respectively, of Woodward Avenue, for a total of 65 businesses. All of the businesses on the west side of Woodward Avenue would have either nearby on-street parking along Woodward Avenue or have

an adjacent parking lot; therefore, there would be no long-term parking-related impact to these businesses.

On the east side of Woodward Avenue, north of Willis Avenue, there are four businesses that currently have adjacent on-street parking (Figure 6-16). They would not have adjacent on-street parking on Woodward Avenue with the median-running LRT and do not have access to an adjacent parking lot.

These four businesses include a restaurant, a small retail store, a produce stop and a pizza shop. There are currently nine unmetered parking spaces located in front of these businesses. Parking is allowed on Willis Avenue east of Woodward Avenue and is also unmetered. Mitigation for these lost spaces on Woodward Avenue in front of these businesses could be provided by metering of at least nine parking spaces along Willis Avenue. Replacing unmetered parking with metered parking causes the space to be available more often and discourages all-day parking at an unmetered parking space. The metering of these spaces is recommended to be shorter in duration (e.g., one hour) to encourage more turnover of the spaces for these businesses.

There are no other businesses on the east side of Woodward Avenue in this section that would have parking impacts.

Figure 6-16. Parking along Woodward Avenue North of Willis Avenue

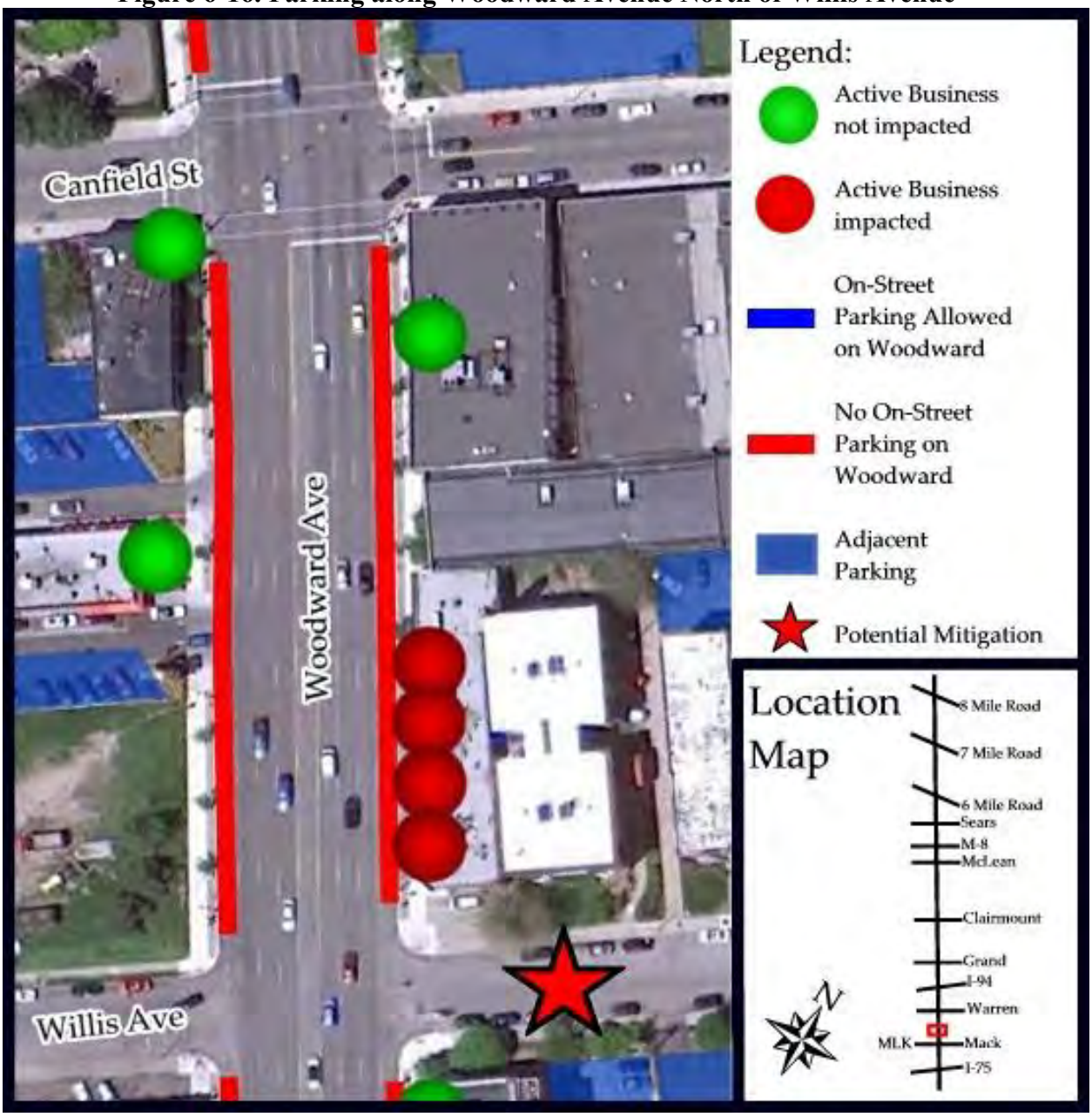

Source: Google Earth and Parsons Brinckerhoff, 2011

6.5.3 Parking along Woodward Avenue from Kirby Street to Grand Boulevard

Within this section, there are currently 114 parking spaces, 68 of which are metered (Figure 6-17). It is anticipated that 65 parking spaces would be removed with the Preferred Alternative. All parking between Piquette Street and Grand Boulevard would be removed; there are currently 27 metered parking spaces generating approximately $351 per day in parking revenue.

There are currently 32 active businesses located on the east side of Woodward Avenue and 11 active businesses on the west side of Woodward Avenue in this section, for a total of 43 businesses. All of the active businesses between Kirby and Milwaukee Streets would either have available on-street parking along Woodward Avenue or have an adjacent parking lot.

On the east side of Woodward Avenue, north of Milwaukee Street, there are eight businesses that would not have any on-street parking on Woodward Avenue and do not have access to an adjacent parking lot.

Figure 6-17. Parking along Woodward Avenue South of Grand Boulevard

Source: Google Earth and Parsons Brinckerhoff, 2011

These eight businesses include clothing stores, beauty supply and specialty services. There are currently 10 metered parking spaces located in front of these businesses. There are also 10 metered parking spaces along Baltimore Street and unmetered parking along Grand Boulevard east of Woodward Avenue. There is also a 135-space public surface lot located west of Woodward Avenue between Milwaukee Street and Grand Boulevard. Replacing unmetered parking along Grand Boulevard with metered parking would cause the space to be available

more often and discourage all-day parking at an unmetered parking space. It is recommended that the non-metered spaces along Grand Boulevard east of Woodward Avenue be metered with a short duration (e.g., one hour) to encourage more turnover of the spaces for these businesses. The conversion to metered parking along Grand Boulevard along with the availability of a surface lot within a block would offset the loss of parking in this location.

There are no other businesses on the east side of Woodward Avenue in this section that would have parking impacts.

6.5.4 Parking along Woodward Avenue from Grand Boulevard to Clairmount Street

There are currently 126 parking spaces along Woodward Avenue in this section, with two of those being metered parking spaces. The Preferred Alternative would eliminate all of the on-street parking in this section. There are currently 10 active businesses located on the east and west sides, respectively, of Woodward Avenue, for a total of 20 businesses. All of the businesses on the west side of Woodward Avenue have an adjacent parking lot and, therefore, would have no long-term parking-related impact.

On the east side of Woodward Avenue, there are four businesses that currently have adjacent on-street parking, and would not have adjacent on-street parking on Woodward Avenue with the Preferred Alternative (Figure 6-18). Three businesses north and south of Melbourne Street currently have access to unpaved parking lots in the rear of their businesses, but mainly use Woodward Avenue and Melbourne Street for their customer parking.

These three businesses include a restaurant, a barber and a retail facility. There are currently 10 unmetered parking spaces located in front of these businesses along Woodward Avenue. Parking is allowed on both sides of Melbourne Street, east of Woodward Avenue, and is also unmetered. Mitigation for these lost spaces could be provided by metering of at least 10 parking spaces along Melbourne Street. Replacing unmetered parking with metered parking causes parking to be available more often and discourages all-day parking at an unmetered parking space. The metering of these spaces is recommended to be shorter in duration (e.g., one hour) to encourage more turnover of the spaces for these businesses. Another option may be to pay one of the unpaved parking lots located behind the business and allow the lot to be shared among the businesses. Neither of these parcels or lots is owned by the City of Detroit.

The fourth business is located south of Alger Street (Figure 6-19). This retail business currently has three unmetered parking spaces located in front of the business along Woodward Avenue. Parking is allowed on both sides of Alger Street east of Woodward Avenue and is also unmetered. Mitigation for these lost spaces on Woodward Avenue in front of these business could be provided by metering of at least three parking spaces along Alger Street. Replacing unmetered parking with metered parking causes the space to be available more often and discourages all-day parking at an unmetered parking space. The metering of these spaces is recommended to be shorter in duration (1-hour) to encourage more turnover of the spaces for this business.

There are no other businesses on the east side of Woodward Avenue in this section that would have parking impacts.

Figure 6-18. Parking along Woodward Avenue Near Melbourne Street

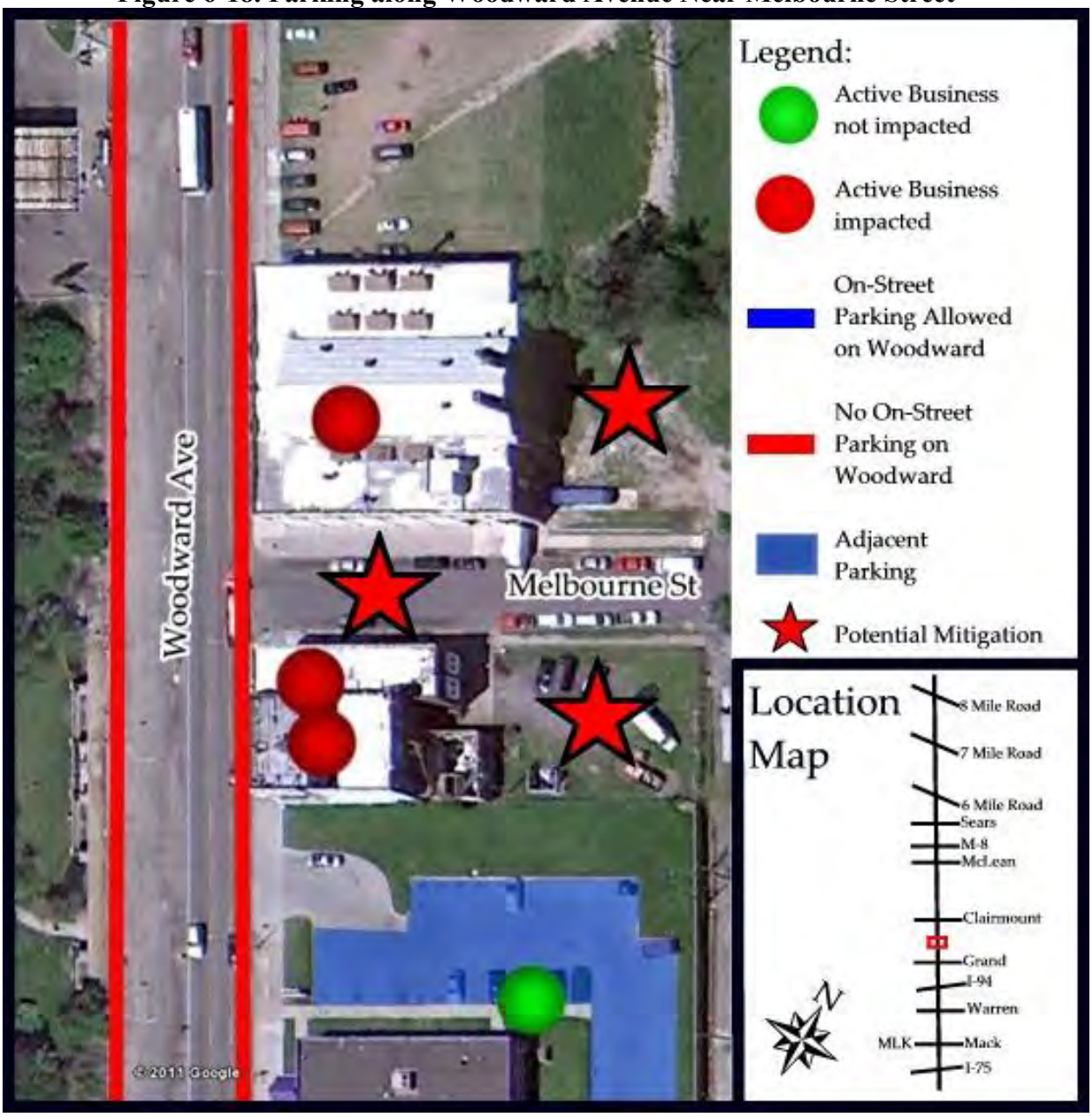

Source: Google Earth and Parsons Brinckerhoff, 2011

Within this section is Northern High School, which is operated by the Detroit Public Schools and located south of Owen Street on the east side of Woodward Avenue. Vehicles pick up and drop off students along Woodward Avenue in front of the high school. The Preferred Alternative would eliminate parking in this area. It is recommended that the drop-off/pick-up parking area be moved to Owen Street, or that a drop-off/pick up lane be added in front of the school.

Figure 6-19. Parking along Woodward Avenue South of Alger Street

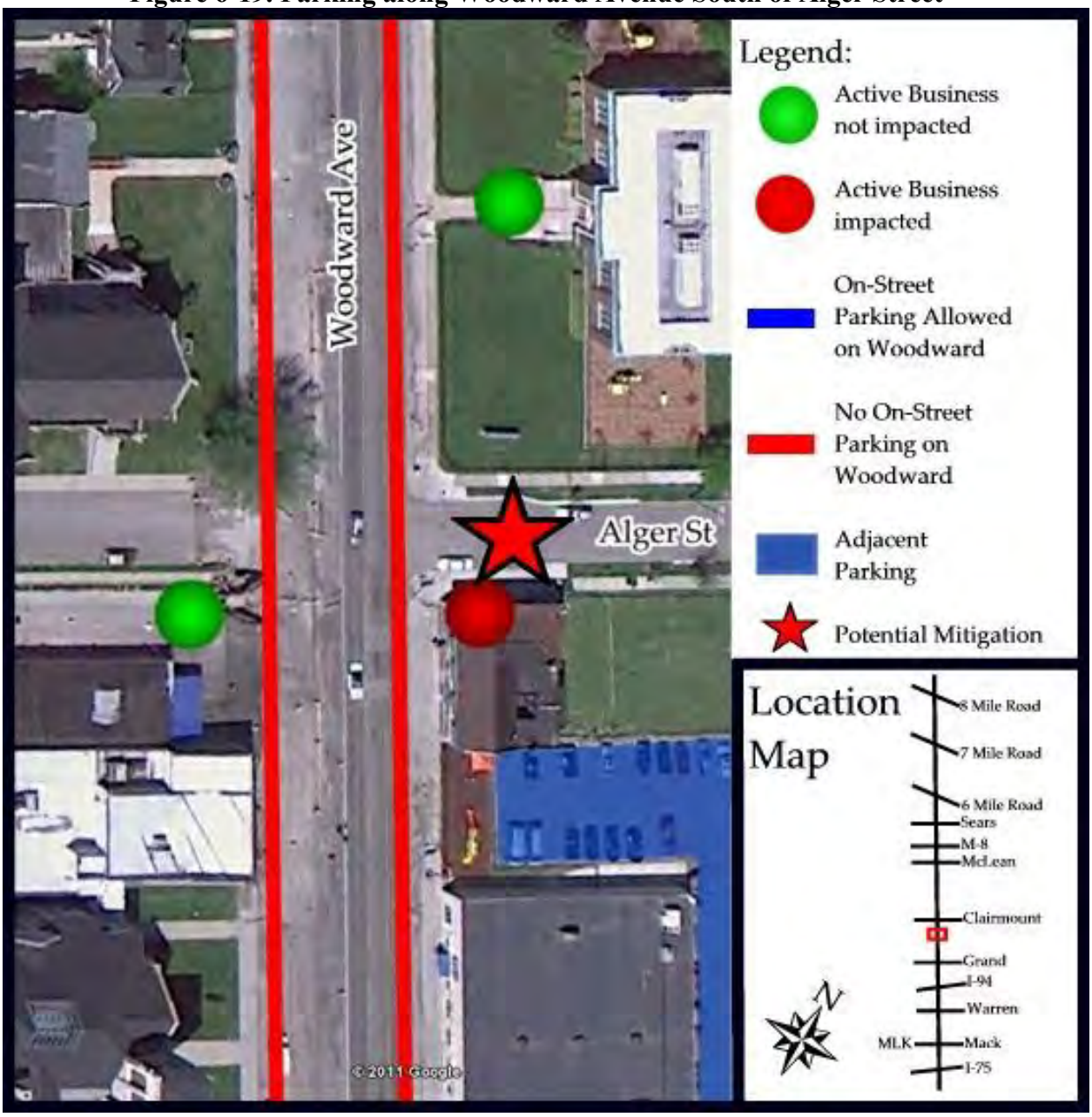

Source: Google Earth and Parsons Brinckerhoff, 2011

6.5.5 Parking along Woodward Avenue from Clairmount Street to McLean Street

In this section of Woodward Avenue, there are approximately 187 non-metered parking spaces available, which would all be removed with the Preferred Alternative. There are currently 24 and 18 active businesses located on the east and west sides, respectively, of Woodward Avenue, for a total of 42 businesses. All of the businesses on the east side of Woodward Avenue have an adjacent parking lot and, therefore, there would be no long-term parking-related impact to these businesses.

On the west side of Woodward Avenue, there are seven businesses that currently have adjacent on-street parking. They would not have adjacent on-street parking on Woodward Avenue with

the Preferred Alternative and do not have access to an adjacent parking lot. One of the businesses is located south of Lawrence Street (Figure 6-20).

Figure 6-20. Parking along Woodward Avenue south of Lawrence Street

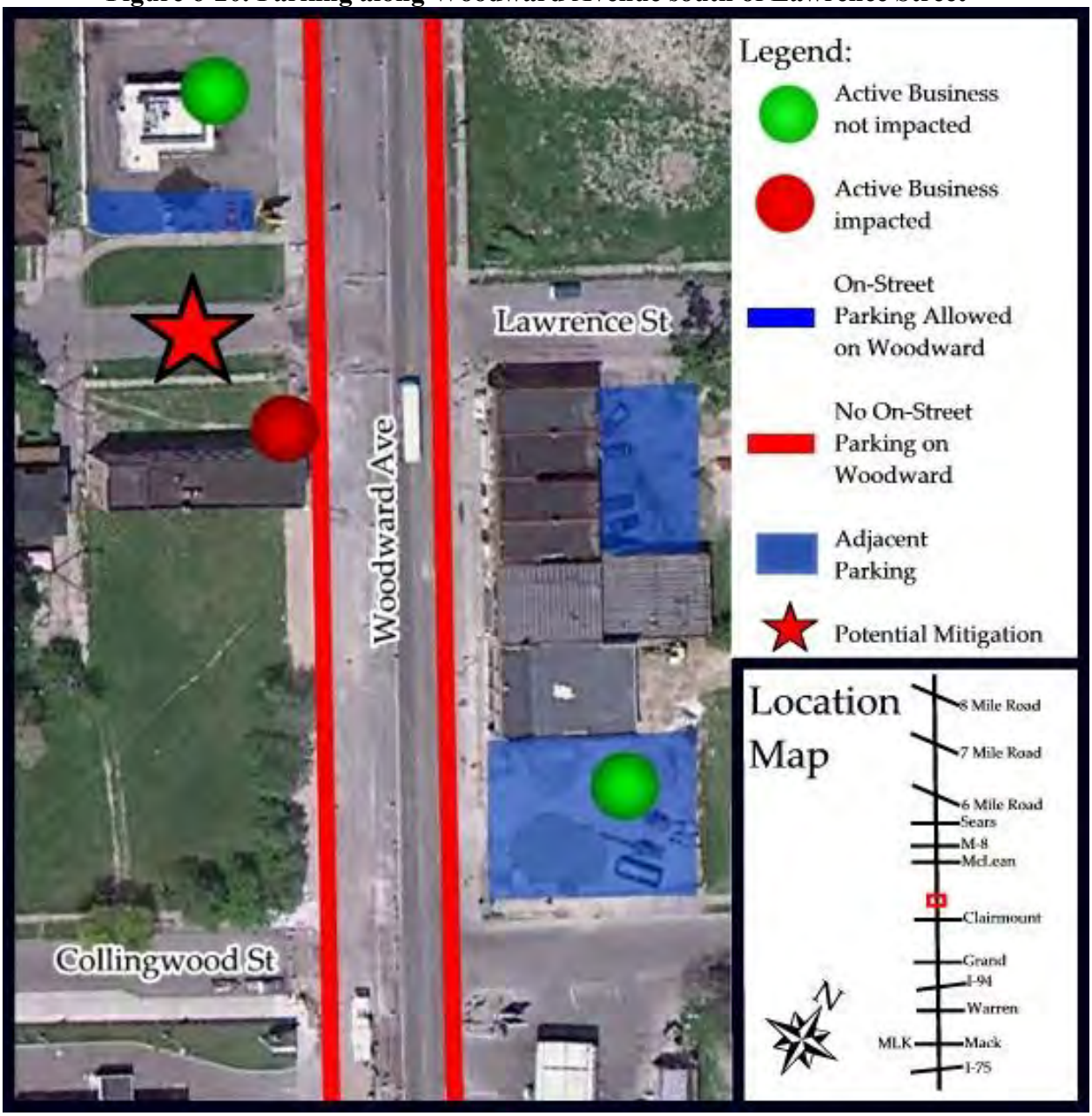

Source: Google Earth and Parsons Brinckerhoff, 2011

This specialty business currently has three unmetered parking spaces located in front of it, along Woodward Avenue. Parking is allowed on the south side of Lawrence Street west of Woodward Avenue and is also unmetered. Mitigation for the loss of spaces on Woodward Avenue in front of these businesses could be provided by metering at least three parking spaces along Lawrence Street. Replacing unmetered parking with metered parking causes the space to be available more often and discourages all-day parking at an unmetered parking space. The metering of these

spaces is recommended to be shorter in duration (e.g., one hour) to encourage more turnover of the spaces.

The other six businesses are located on either side of Highland Street on the west side of Woodward Avenue (Figure 6-21).

Figure 6-20. Parking along Woodward Avenue near Highland Street

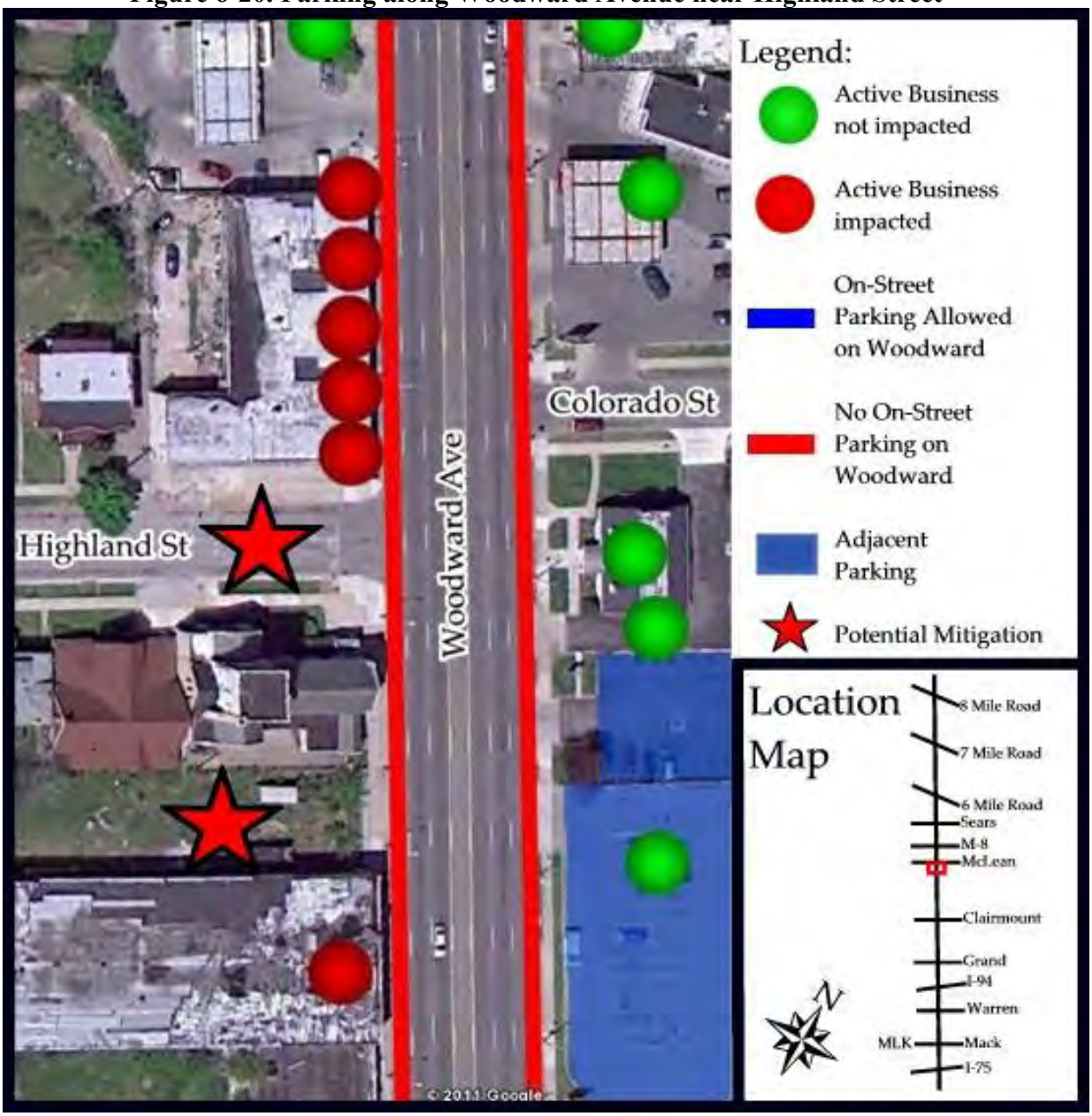

Source: Google Earth and Parsons Brinckerhoff, 2011

These businesses include a specialty services, a restaurant and a barber. There are currently 18 unmetered parking spaces located in front of these businesses along Woodward Avenue. Parking is allowed on both sides of Highland Street, west of Woodward Avenue, and is also unmetered. Mitigation for the loss of spaces on Woodward Avenue in front of these businesses could be provided by metering some of the spaces along Highland Street. Replacing unmetered parking

with metered parking causes the space to be available more often and discourages all-day parking at an unmetered parking space. The metering of these spaces is recommended to be shorter in duration (e.g., one hour) to encourage more turnover of the spaces for these businesses. Another option is to pave a vacant parcel located south of Highland Street and next to a church to convert it to off-street parking. This lot is approximately 50 feet wide and 190 feet long and could fit approximately 20 parking spaces, which would adequately mitigate the impact of lost parking to these businesses.

There are no other businesses on the west side of Woodward Avenue in this section that would have parking impacts.

6.5.6 Parking along Woodward Avenue from McLean Street to Sears Street

In this section of Woodward Avenue, there are approximately 81 non-metered parking spaces available, which would all be removed with the Preferred Alternative. There are currently 44 and 36 active businesses located on the east and west sides, respectively, of Woodward Avenue, for a total of 80 businesses. All of the active businesses on the east side of Woodward Avenue either have an adjacent parking lot or have no current parking in front of their business along Woodward Avenue. Therefore, there would be no long-term parking-related impact to these businesses.

There is one business on the west side of Woodward Avenue that currently has adjacent on-street parking; it would not have adjacent on-street parking on Woodward Avenue with the Preferred Alternative and does not have access to an adjacent parking lot. This business is located south of Pasadena Street (Figure 6-22).

This specialty business currently has three unmetered parking spaces located in front of the businesses along Woodward Avenue. Parking is allowed on both sides of Pasadena Street, west of Woodward Avenue, and is also unmetered. Mitigation for these lost spaces on Woodward Avenue in front of this business could be provided by metering three of the spaces along Pasadena Street. Replacing unmetered parking with metered parking causes the space to be available more often and discourages all-day parking at an unmetered parking space. The metering of these spaces is recommended to be shorter in duration (e.g., one hour) to encourage more turnover of the spaces for these businesses.

There are no other businesses on the west side of Woodward Avenue in this section that would have parking impacts.

6.5.7 Parking along Woodward Avenue between Sears Street and McNichols Road

In this section of Woodward Avenue, there are approximately 48 non-metered parking spaces available, all of which would be removed with the Preferred Alternative. There are currently 16 and 23 active businesses located on the east and west sides, respectively, of Woodward Avenue, for a total of 39 businesses. All of the businesses on the west side of Woodward Avenue have an adjacent parking lot and, therefore, there would be no long-term parking-related impact to these businesses. On the east side of Woodward Avenue, all of the businesses either have an adjacent parking lot available or do not currently have adjacent on-street parking on Woodward Avenue. Therefore, there would be no long-term parking-related impacts to these businesses.

Figure 6-21. Parking along Woodward Avenue Near Pasadena Street

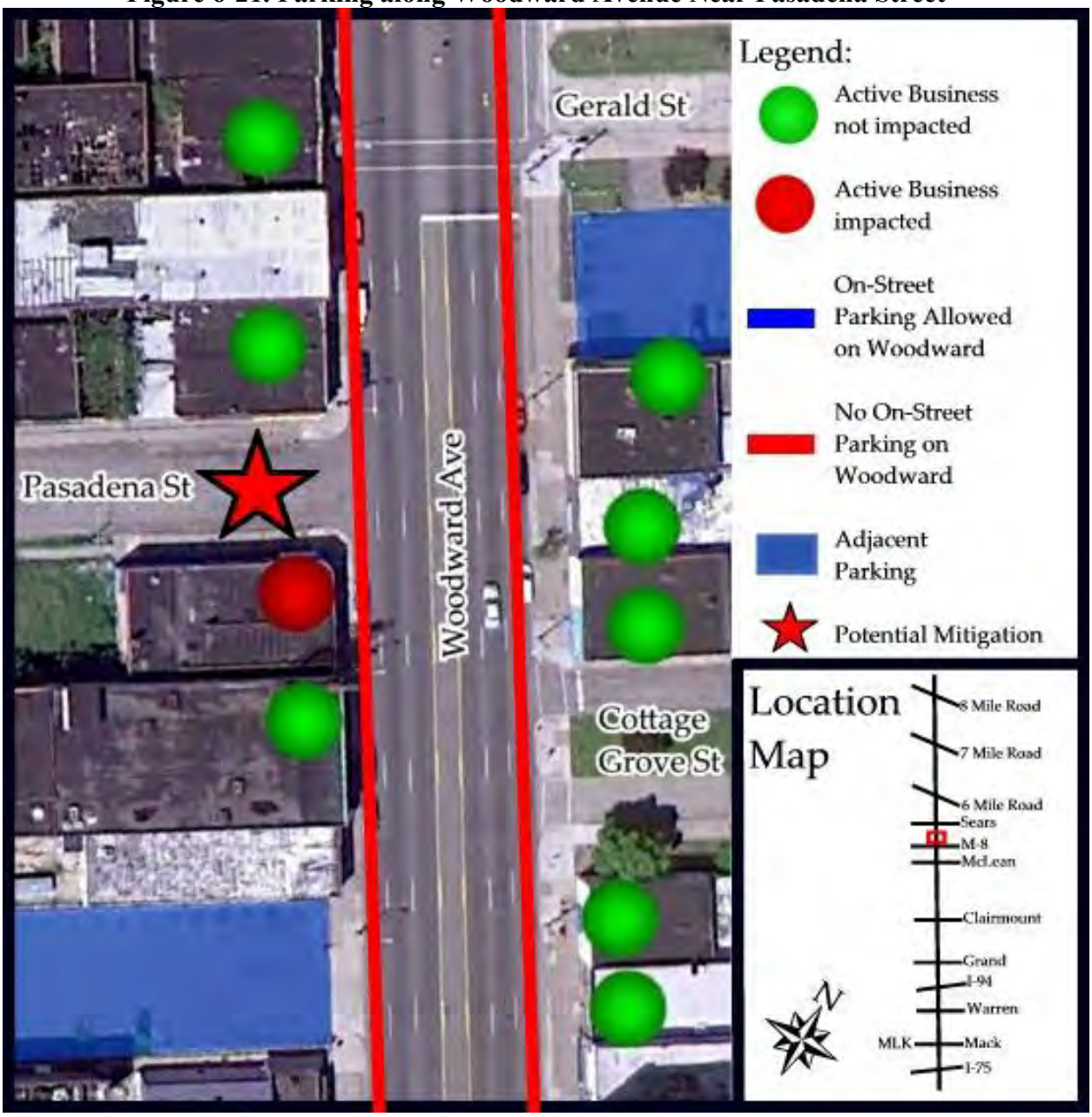

Source: Google Earth and Parsons Brinckerhoff, 2010

6.5.8 Parking along Woodward Avenue between McNichols Road and 8 Mile Road

In this section of Woodward Avenue, there are approximately 125 non-metered parking spaces available. With the Preferred Alternative, approximately 579 parking spaces would be available. None of the parking spaces would be removed and there would be parking spaces in front of all businesses located along Woodward Avenue. No parking impacts are expected to businesses in this section.

6.6 Freight Movement

6.6.1 Trucking and Deliveries

Recent traffic counts indicate that commercial vehicles account for an average of about 3 percent of traffic on roadways in Downtown Detroit. Much of this is delivery traffic for Downtown businesses and is characterized by smaller delivery trucks. The addition of LRT would not decrease any of the existing curb radii, meaning that commercial vehicles would be able to complete the same turns that they are able to today. Right and left-turning analysis with commercial vehicles would be completed during the design phase of project development to verify that these vehicles would be able to complete these movements.

Deliveries along the roadways with the exclusive LRT rail guideway and only one general-use lane in each direction would be prohibited. Deliveries along roadways with two general-use lanes would be restricted during the peak traffic times (7 to 9 a.m. and 3 to 6 p.m.). Deliveries along roadways that have an outside LRT/shared-use lane on both sides of the roadway would be prohibited (Table 6-7).

The table below summarizes the expected delivery restrictions by roadway segment for the Preferred Alternative with Downtown Detroit.

Table 6-7. Downtown Delivery Restrictions

Section	Alternative A4
Larned between Washington and Woodward	Morning/Evening
Congress between Woodward and Washington	Morning/Evening
Washington between Michigan and Larned	All-Day
Woodward between Grand River and Adams	All-Day
Woodward between Adams and I-75	Morning/Evening

Source: Parsons Brinckerhoff, 2011

Given the assumed 1 percent per year growth in commercial vehicle traffic volumes, it is expected that there would be between 860 and 1,050 commercial vehicles per day utilizing Woodward Avenue in 2030.

An analysis was conducted of trucks with a wheel base of 50 feet (WB-50) that turn right onto and off Woodward Avenue. This analysis was conducted to determine if there would be any change in the ability of heavy vehicles to make turning maneuvers with the Preferred Alternative's median-running operation, compared to existing conditions. Appendix J of this report discusses the right-turning truck analysis for the following representative signalized intersections in the 120-foot-wide ROW section:

- MLK Jr. Boulevard/Mack Avenue and Woodward Avenue
- Canfield Street and Woodward Avenue
- Antoinette Street/Medbury Avenue/ Westbound I-94 Service Drive and Woodward Avenue

These are considered representative of other cross streets along the study corridor in this section of the alignment. At MLK Jr. Boulevard/Mack Avenue it was found that trucks would have difficulty turning off and onto Woodward Avenue. For trucks turning *onto* Woodward Avenue from MLK Jr. Boulevard/Mack Avenue, trucks would need to "swing out" and encroach into the

adjacent lane to complete the right-turn onto Woodward Avenue. This would be slightly worse than the current condition. During preliminary design of the proposed Project, relocation of the proposed station locations further away from the intersection would need to be evaluated to accommodate the truck-turning radius. For trucks turning *off* Woodward Avenue at MLK Jr. Blvd/Mack Avenue, trucks would swing out slightly and encroach into the adjacent lane to complete the right turn, which would be the same as the current condition.

At Canfield Street, the analysis found that trucks would have no difficulty turning from the cross street onto Woodward Avenue, as long as the vehicles turn from the left-most part of the lane. Trucks turning from Woodward Avenue onto Canfield Street would need to swing out across multiple lanes and encroach into the left-turn lane to complete the maneuver, making this movement impractical. Currently, trucks swing out into the adjacent through lanes to complete this maneuver. Recent turning movement counts indicate that there is at most one truck turning onto or off Canfield Street during each of the morning and afternoon peak hours.

At Medbury Avenue, the analysis found that trucks would have no difficulty turning onto Woodward Avenue. Trucks turning off Woodward Avenue onto Antoinette Street would need to swing out across multiple lanes and encroach into the LRT tracks to complete the maneuver, making this movement impractical. Currently, trucks swing out into adjacent through lanes and possibly the left-turn lane to complete this maneuver. Trucks turning off Antoinette Street onto Woodward Avenue would swing out slightly and encroach into the adjacent lane to complete the turn, which would be worse than existing conditions.

A right-turning analysis was also conducted of each signalized intersection along Woodward Avenue between Grand Boulevard and the Davison Freeway. Overall, the analysis found that trucks would need to swing out and encroach into the adjacent lane on Woodward Avenue to complete a right-turn onto a side street. This would be the same as the existing condition. Trucks turning onto Woodward Avenue would need to encroach into the LRT tracks to complete the turn within the intersection. Given this, the rail guideway should remain at the same grade as the roadway pavement within approximately 50 to 75 feet of either side of an intersection.

North of McNichols Road, the median-divided segment with crossovers would allow all types of trucks and passenger vehicles to complete left-turn and u-turn movements.

A u-turning analysis was also conducted of various signalized intersections between I-75 and McNichols Road (see Appendix K of this report). This analysis found that trucks and buses would not be able to complete a u-turn movement at any signalized intersection. Passenger vehicles and smaller trucks would be able to complete u-turn movements at all signalized intersections.

Deliveries would continue to be allowed along Woodward Avenue where on-street parking is allowed, which is primarily south of Piquette Street. Parking would generally be removed at LRT station locations and approximately 150 feet north and south of a station. Removal of delivery access may impact some businesses along Woodward Avenue. These businesses are typically those that have food or beverage deliveries.

Due to the proposed removal of some parking spaces with the Preferred Alternative (see Section 6.5), which would affect on-street deliveries, mitigation may be necessary at those locations where on-street delivery is currently the only available option. Mitigation measures may include allowing off-peak or night-time deliveries to affected business locations.

6.6.2 Freight Railroads

Woodward Avenue intersects with three grade-separated rail lines at two bridges near Piquette Street in Detroit and a third bridge near Bartlett Street in Highland Park. The three existing railroad bridges may need to be modified to accommodate the median-running operating option. Impacts of the Preferred Alternative at these railroad bridge locations would be investigated in detail during the preliminary design phase of project development. It is not anticipated that freight service would be interrupted during construction of the Preferred Alternative.

6.7 Emergency Vehicles

It will be determined during the design phases of project development whether the median-running operation with the Preferred Alternative would have a barrier separating the LRT from vehicular traffic. If a barrier is present, this may result in an increase in emergency response times, as it would not be possible to traverse the barrier at unsignalized intersections during an emergency situation. However, a mountable curb separating the LRT from vehicular traffic would not impede emergency vehicle turning movements.

There are five fire stations located either within Downtown Detroit or along the Woodward Avenue Corridor to State Fair Avenue. The locations of the fire stations and the potential impact of the Preferred Alternative on response time are discussed below.

Location 1: Engine 1 - 111 Montcalm

The location of Engine 1 is at 111 Montcalm Street, west of Park Avenue within Downtown Detroit. This fire house is approximately one block from Woodward Avenue (Figure 6-23). With the Preferred Alternative, there would be signals at the intersections of Woodward Avenue with Northbound I-75 Service Drive and at Park Avenue/Witherell Street. Given the proximity of the signals on either side of the fire station along Woodward Avenue, it is not expected that response times would increase.

Figure 6-22. Location of Engine 1

Location 2: Engine 5 – 433 West Alexandrine Street

Engine 5 is located at 433 West Alexandine Street, approximately 0.21 miles west of Woodward Avenue and Cass Avenue. With the Preferred Alternative, the existing Woodward Avenue signals located at Alexandrine Street, Canfield Street, and Parsons Street would remain (Figure 6-24). Because this firehouse is located on a street where there is a signal with Woodward Avenue, it is not expected that response times would increase.

Figure 6-23. Location of Engine 5

Source: Google Earth and Parsons Brinckerhoff, 2011

Location 3: Engine 17 – 6100 Second Avenue

Engine 17 is located at 6100 Second Avenue, north of Burroughs Street (Figure 6-25). The firehouse is approximately 0.20 miles from Woodward Avenue. With the median-running alignment, there would be a new signal located at the intersection of Amsterdam Avenue/Piquette Street and Woodward Avenue. The existing signal at Antoinette Street/Medbury Avenue and Woodward Avenue would remain. The existing signal at Baltimore Street would be removed due to a vertical grade differential at that intersection, where the grade of the LRT guideway must be reduced from that of the roadway to achieve the necessary vertical clearance under the adjacent railroad overpass. The VSMF site for Phase 1 of Project construction would be located off Amsterdam Street west of Woodward Avenue. Access for the LRT to the VSMF site would be along Burroughs Street between Woodward and Cass avenues and along Cass Avenue. Burroughs Street may need to be converted to one-way westbound traffic between Cass Avenue and Woodward Street while the VSMF site is operational during

Phase 1 Project construction. Due to the new signal at Amsterdam Street / Piquette Street, it is not expected that response times would increase at this firehouse.

Figure 6-24. Location of Engine 17

Source: Google Earth and Parsons Brinckerhoff, 2011

Location 4: Engine 35 – 111 Kenilworth Street

Engine 35 is located at 111 Kenilworth Street, east of Woodward Avenue (Figure 6-26). The firehouse is approximately 0.12 miles east of Woodward Avenue. With the Preferred Alternative, there would be right-turn-only access to Woodward Avenue at Kenilworth Street. The existing signal located north of the fire station at the intersection of Chicago Boulevard/Arden Park Boulevard and Woodward Avenue would remain. The existing signal located south of the fire station at the intersection of Clairmount Street/Owen Street and Woodward Avenue would provide southerly access to Woodward Avenue via John R Street. No signals would be removed in this area. It is not expected that response time would increase if the fire station were responding to an incident to the north of its location. However, there may be a slight increase in response time to an incident to the south or on the other side of Woodward Avenue.

Figure 6-25. Location of Engine 35

Source: Google Earth and Parsons Brinckerhoff, 2011

Location 5: Engine 44 – 35 7 Mile Road

Engine 44 is located at 35 7 Mile Road, approximately 0.6 miles east of Woodward Avenue (Figure 6-27). The existing signals located at Woodward Avenue and 7 Mile Road would remain and allow full access to Woodward Avenue. Full access would also be provided at Nevada Street. Some crossovers along Woodward Avenue would be eliminated north of McNichols Street and all remaining crossovers would be signalized. There would be full access to Woodward Avenue at the following locations north of McNichols Road: Nevada Street, Grixdale Avenue, Hollywood Avenue, Carmel Street, Strathcona Drive and State Fair Avenue. It is expected that response time would not increase at this firehouse location.

Figure 6-26. Location of Engine 44

Source: Google Earth and Parsons Brinckerhoff, 2011

According to the Detroit Fire Department (DFD), fire trucks need a minimum of 13 feet and six inches of vertical clearance and a 38-foot turning radius to complete a u-turn. With the median-running alignment, fire trucks would be able to complete a u-turn at all signalized locations from the left-turn lane on Woodward Avenue. The DFD also needs approximately 20 feet from a building face to raise the ladder to access windows on the building face. Because the width of most sidewalks is 15 feet along the study corridor, fire trucks would need to occupy either the parking lane (if available) or one of the general-use lanes. There would be no disruption to the median-running LRT during a fire event on Woodward Avenue.

There are several major hospitals with emergency room within the study corridor. Detroit Receiving Hospital uses Canfield Street to access its emergency room off St. Antoine Street. With the Preferred Alternative, Canfield Street at Woodward Avenue would be signalized and all turning movements would be allowed; therefore, there would be no change in response times. Emergency Medical Service (EMS) vehicles have the same approximate turning radius as does a

passenger vehicle; therefore, EMS vehicles would be able to complete u-turns at all signalized intersection.

6.8 Traffic Operations

Changes to Downtown Detroit roadways with the Preferred Alternative are described in Section 6.1. The Preferred Alternative would generally include removal of a lane in each direction of travel along Woodward Avenue between I-75 and State Fair Avenue to accommodate the median-running LRT operation. Proposed intersection operations with the LRT, the use of Transit Signal Priority (TSP), Project-related impact to vehicles and trucks accessing businesses and homes and traffic operations are discussed below.

6.8.1 Methodology

Traffic Volumes and Signalization

For purposes of a conservative analysis, it was assumed that all traffic currently within Downtown Detroit or on Woodward Avenue would maintain current traffic patterns, and would not divert to other roadways or switch mode from automobile to LRT. Therefore, the non-LRT traffic volumes projected for the 2030 No Build Alternative were used in the evaluation of conditions with the Preferred Alternative. This represents a "worst-case" scenario, as most roadways adjacent to the alignment have additional capacity to accommodate diverted trips (Chapter 4.0, Figure 4-1 Congested Roadways in 2030).

LRT-only signal phases are proposed at the following intersections within Downtown Detroit with the Preferred Alternative:

- Woodward Avenue and Park Avenue / Witherell Street – due to transition
- Woodward Avenue and North Campus Martius – due to lane transition
- Woodward Avenue and South Campus Martius – due to lane transition
- Congress Street / Larned Street and Woodward Avenue – due to turn
- Congress Street / Larned Street and Griswold Street – due to lack of turn lanes
- Congress Street / Larned Street and Shelby Street – due to lack of turn lanes
- Congress Street / Larned Street and Washington Boulevard – due to turn
- Washington Boulevard and Michigan Avenue – due to lack of turn lanes

Signalization would be removed at the following intersections to improve LRT travel time:

- Sibley Street at Woodward Avenue
- Charlotte Street at Woodward Avenue
- Peterboro Street/Erskine Street at Woodward Avenue
- Baltimore Avenue at Woodward Avenue
- Seward Street/Marston Street at Woodward Avenue
- Grand Street at Woodward Avenue*
- Gerald Street at Woodward Avenue*

(* = Intersections in the City of Highland Park)

With these signals removed, vehicles would be prohibited from turning left at these intersections. The left-turning volumes projected with the 2030 No Build condition were reassigned in the traffic impact analysis to intersections further upstream where they would be able to make u-

turns to complete the left-turn. Appendix G of this report discusses the change in traffic volumes with removal of these signals and the redistribution of traffic.

Traffic signals would be installed at the following locations:

- Woodward Avenue at Amsterdam Street/Piquette Street
- Southbound Woodward Avenue at Hollywood Avenue
- Northbound Woodward Avenue and Carmel Street
- Southbound Woodward Avenue at Strathcona Drive

Signals are recommended at all median crossovers that would cross the LRT tracks. Unsignalized crossovers with the median-running LRT are not recommended due to potential safety conflicts between the LRT and the vehicles using the crossover. Installation of a signal at Amsterdam Street/Piquette Street is recommended to provide LRT access to the proposed VSMF site and pedestrian access to the proposed LRT station in this area.

Transit Signal Priority

TSP was included in the travel demand modeling of all the signalized intersections along the alignment within Downtown Detroit and along Woodward Avenue between Park Avenue near Downtown Detroit to State Fair Avenue. TSP is a less aggressive method to integrate transit service into traffic signal operation than is signal preemption, which forces a signal-phase change to serve the priority every time a priority vehicle approaches an intersection. TSP would enable extension of the green indication or an early return to green indication for an approaching LRT vehicle. This would maintain signal coordination in the overall system. Several constraints can be placed on how the TSP would operate. For analysis of the proposed Project, TSP assumptions developed in the report *Transit Signal Priority on Woodward Avenue* (Wilbur Smith Associates, 2006) were used, as the 2006 study had been approved previously by MDOT. City of Detroit traffic engineering staff agreed with the use of these assumptions for the Downtown portion of the study corridor that is not on the MDOT trunk line.

The base assumptions are as follows:

- Traffic signal controller would be a Siemens EPAC, which is a controller type commonly used by MDOT and other agencies in Michigan.
- The controllers would be able to run both early green and green extension.
- Maximum green-time reduction for the non-priority phase would be 20 percent of the total green time without violating minimum split.
- Maximum green-time extension would be 20 percent of cycle length.
- Recovery after activation of the TSP would take no longer than one cycle.
- TSP would be unconditional (active every time an LRT vehicle approaches, compared to conditional, where it would only run if an LRT vehicle was behind schedule).
- LRT dwell times at stations were assumed to be 20 seconds.

It was assumed that the TSP would only be activated by the LRT; TSP was not modeled for activation by buses. In the modeling, TSP at locations with direct left-turns allowed for vehicles following the LRT to be handled in one of two ways. If an exclusive left-turn bay was present, the LRT shared the same phase as Woodward Avenue through traffic, and the

left-turn vehicles had their own protected phase. This was typical of all signalized intersections in the 120-foot-wide ROW section. For the 100-foot-wide ROW section where the left-turn lane would be shared with the LRT track, the signal phasing is described in detail in Appendix F of this report.

U-Turn Estimation

With the median-running LRT, only right-turns would be allowed to and from unsignalized cross streets and driveways along Woodward Avenue. Left-turns and u-turns would be permitted only at signalized intersections. Vehicles wanting to turn left at unsignalized locations would need to either make a u-turn at the next signalized intersection, or complete a left-turn at a signalized intersection and use other surface streets in the area to reach their intended destination or route. For the traffic analysis, an estimate was made regarding the number of u-turn maneuvers that would result from the prohibition of left-turns at unsignalized intersections. This estimate was then included in the VISSIM analysis of the Preferred Alternative's median-running operation.

In order to determine the volume and location of u-turns, the re-directions of left-turns both onto and off Woodward Avenue were considered. Both of these movements would be restricted with the median-running LRT. In either case, the two options for left-turning vehicles are to:

1. Complete a u-turn on Woodward Avenue at the next signalized cross-street, or;
2. Turn left at the nearest signalized cross street on Woodward Avenue and use adjacent side streets to reach the intended destination or route.

Therefore, the number of additional u-turns or side-street left-turns at a signalized intersection is determined by the number of unsignalized intersections between signals. For example, to determine the number of southbound u-turns at an intersection, the number of eastbound left-turning vehicles was estimated for each cross street based on a similar, nearby cross street where a turning-movement count was taken. With the median-running LRT, eastbound left-turning vehicles from a cross street would be required to turn right onto southbound Woodward Avenue and then make a u-turn during the protected southbound left-turn phase at that nearest signal to the south.

Similarly, southbound vehicles on Woodward Avenue turning left onto an eastbound cross street would be required to continue south to the next signalized intersection and make a u-turn. These southbound left turns were estimated at each cross street based on southbound left turns made at similar intersections where counts were available. The same maneuver would be required for northbound traffic (Figure 6-28).

This estimation process was repeated for the segments between signalized intersections in both directions along the Woodward Avenue Corridor from I-75 to McNichols Road. North of McNichols, Woodward Avenue is already a median-divided roadway, and direct left-turns are prohibited at all locations.

Along the Corridor, the number of unsignalized intersections between signalized intersections ranged from none to seven, the latter between I-75 and Mack Avenue. There were 10 signalized intersections where no northbound u-turns are expected and nine intersections where no southbound u-turns are expected. At these locations, either there was no protected left-turn phase during which u-turns could be performed or there were no unsignalized cross streets between signalized intersections. The number of estimated u-turns at the intersections where u-

turns are expected was averaged to provide a simplified value to add to the VISSIM models (Table 6-8).

Figure 6-27. Left-turns at Unsignalized Cross -Streets

Source: Parsons Brinckerhoff, 2011

Table 6-8. Average Estimated Number of U-Turns used for VISSIM Analysis

Direction of Travel	Morning U-turns	Evening U-turns
Southbound on Woodward Avenue	35	66
Northbound on Woodward Avenue	37	56

Source: Parsons Brinckerhoff, 2011

In all cases, there was an available nearby alternate route between the unsignalized cross streets and a signalized intersection, including Cass Avenue and John R Street south of Grand Boulevard and Second Avenue, and John R Street north of Grand Boulevard. North of Grand Boulevard, John R Street is one-way southbound and Second Avenue is one-way northbound, making them ideal alternate routes for southbound and northbound traffic, respectively. The furthest additional distance a vehicle may need to travel on an alternate route is 0.41 miles north on Second Avenue between Puritan Street and McNichols Road. For purposes of a conservative analysis, it was assumed that no alternate routes would be used and that all vehicles would make u-turns on Woodward Avenue.

6.8.2 Traffic Conditions

For the future year 2030 Preferred Alternative VISSIM Model, the LRT operations was assumed to operate as described in Section 6.1 of this Chapter within Downtown Detroit and along the center median of Woodward Avenue from I-75 in Downtown Detroit to north of State Fair Avenue.

Within the model, left turns were prohibited at unsignalized intersections north of Downtown Detroit. All types of turns were allowed at most signalized intersections, except at the intersection of Warren Avenue at Woodward Avenue where indirect left turns are recommended.

At intersections with left-turn lanes, a protected left-turn phase was assumed, along with vehicle detection. The left-turn phase would be activated if a vehicle was present, and the phase was typically assumed to be a lagging protected left-turn phase. LRT trains were allowed through the intersection when northbound and southbound Woodward Avenue had a green indication. It was assumed that side-street detection and pedestrian push buttons would be installed at all signalized intersections along the study corridor. The signalized intersections all had a cycle length of 120 seconds.

The projected 2030 traffic volumes (Appendix G of this report), along with the additional u-turning vehicles north of Downtown Detroit and the proposed lane configuration described earlier, were inputs to the VISSIM model. U-turning vehicles were prohibited northbound at Clairmount Avenue and southbound at Hazelwood Street due to close intersection spacing and the amount of expected left-turn vehicles.

The geometry of five cross streets was modified in the VISSIM model to address excessive delay during the peak hours. A right-turn pocket between 100- and 200-feet long was added to the following locations:

- Eastbound Palmer Street
- Eastbound Milwaukee Street
- Eastbound Euclid Street
- Eastbound/Westbound Clairmount Street
- Eastbound Chicago Boulevard

The addition of this storage length allows right-turning vehicles to pass through and left-turning vehicles to queue at the signal. This would require the removal of parking along these streets. It is not anticipated that this storage would be needed at the beginning of LRT operation, but may need to be added as traffic volumes increase to 2030 levels.

Appendix L of this report summarizes the morning and evening peak-hour operational results (level of service and delay) from the VISSIM models for all signalized intersections along the Corridor for the Preferred Alternative.

The results of the VISSIM modeling indicate that all signalized intersections would operate at an overall LOS D (which is generally considered acceptable) or better in the morning and evening peak hours. While the overall intersections would operate at an acceptable LOS overall, a number of individual approaches would operate at LOS E (congested conditions) during the morning or evening peak hours. These approaches are:

- Westbound Gerald Street – evening peak hour
- Eastbound Buena Vista Street – morning and evening peak hours
- Eastbound Tuxedo Street – morning peak hour
- Eastbound Chicago Street – evening peak hour
- Westbound Holbrook Street – morning peak hour
- Eastbound Putnam Street – evening peak hour

The westbound Buena Vista Street approach to Woodward Avenue would operate at LOS F in the morning peak hour. In the future morning peak hour, there is expected to be 13 vehicles using this approach. A LOS F for this approach is the result of the addition of side-street detection and the low volume of vehicles arriving at the signal. With the proposed cycle length

of 120 seconds at this intersection and the low volume, vehicles may need to wait for more than 80 seconds for the green signal, which is the criteria for LOS F. Typically, mitigation is not applied for signalized approaches that have such low traffic volumes.

Table 6-9 provides a summary of the anticipated travel time for a vehicle to travel along southbound Woodward Avenue between State Fair Avenue and Northbound I-75 Service Drive in the morning peak hour and northbound Woodward Avenue in the evening peak hour.

Table 6-9. Non-LRT Vehicle Travel Time along Woodward Avenue

Woodward Avenue Section		Travel Time	
		Southbound in Morning Peak Hour	Northbound in Evening Peak Hour
MLK Jr. /Mack	I-75	2 min 45 sec	3 min 23 sec
Warren	MLK Jr. /Mack	2 min 37 sec	4 min 3 sec
Antoinette	Warren	3 min 50 sec	3 min 49 sec
Glendale	Antoinette	6 min 54 sec	7 min 28 sec
McNichols	Glendale	3 min 28 sec	4 min 57 sec
State Fair	McNichols	3 min 12 sec	3 min 48 sec
Total		**22 min 46 sec**	**27 min 28 sec**
Average Speed		**21.1 mph**	**17.5 mph**

Source: Parsons Brinckerhoff, 2011

It would take approximately 23 minutes for a vehicle to travel along southbound Woodward Avenue in the morning peak hour from State Fair Avenue to Northbound I-75 Service Drive. Northbound, in the evening peak hour, it would take approximately 27 minutes from Northbound I-75 Service Drive to State Fair Avenue. Comparing this to the 2030 No Build Alternative (Table 4-4), it would take approximately 11 additional minutes for a vehicle to travel these sections.

6.9 Construction Impacts

Construction of the Preferred Alternative is expected to take approximately 36 to 42 months and is proposed to occur sequentially in two phases (see Chapter 2.0, Section 2.2.4). Detailed maintenance of traffic plans would be prepared during the design phase of project development.

6.9.1 Transit Service

Construction of a median-running LRT system would be least disruptive to the existing bus service, as the majority of construction activity would occur away from the curb, except where intersections and crosswalks are rebuilt at LRT station locations. Existing traffic patterns would be affected during construction, which would result in longer travel times and may result in temporary detours for some bus routes.

6.9.2 Motor Vehicle and Non-Motorized Traffic

Existing traffic patterns would be affected during construction, resulting in longer travel times for motor vehicles and temporary detours in some locations, varying as construction progresses along sections of the LRT alignment.

Crosswalks across Woodward Avenue may need to be closed at signalized intersections while center stations and LRT tracks are constructed. Construction would be staged so that at least one crosswalk would be maintained at each intersection location and signage would be placed to guide pedestrians to available crossing locations. Cyclists would continue to ride in the right-most traffic lane. Construction would likely result in reduced vehicle travel speeds, allowing cyclists to mix with vehicular traffic more safely.

6.9.3 Parking

As discussed in Chapter 2.0 of the report, construction of the LRT along the Woodward Avenue Corridor would be completed in two phases. Phase 1 would entail construction of the southern section between Downtown and Grand Boulevard. Phase 2 would entail construction of the northern section, from Grand Boulevard to the Michigan State Fairgrounds. During Phase 1, construction of the LRT within Downtown Detroit would cause the temporary loss of all parking during construction staging. This is due to the narrower roadway widths and the possibility of even some roadway closures during construction. Access to businesses would be maintained during all phases and stages of construction.

Construction of the LRT between Adams Street and Grand Boulevard during Phase 1 would entail closing half of Woodward Avenue during a construction stage. One travel lane along Woodward Avenue would be maintained in each direction and left-turn lanes would be maintained at signalized intersections. Left-turn access at unsignalized intersections and driveways may not be maintained; however right-turn access would be maintained. On-street parking may be feasible between signalized intersections on only the side of the roadway where traffic is maintained. On-street parking on the other side would not be maintained.

Between Grand Boulevard and McNichols Road, during Phase 2, construction of the LRT would entail closing half of Woodward Avenue during a construction stage. One travel lane along Woodward Avenue would be maintained in each direction. Left-turn lanes may not be provided and left-turns along Woodward Avenue could be restricted. Parking would be removed during construction in this section.

North of McNichols Road, during Phase 2, construction may entail closing the inner-most lanes of Woodward Avenue for the construction of the LRT guideway. Crossovers would be closed during construction, causing vehicles to travel to the next crossover to turn around. Parking along Woodward Avenue could be maintained, but may be restricted in the peak period in the peak direction (i.e., restricted along northbound Woodward Avenue in the evening rush hour).

Deliveries along all roadways with active construction would be prohibited.

6.10 Other Impacts

6.10.1 Signal Head Placement

This section provides a general description of how the overhead catenary wire for the median-running LRT and signal heads at signalized intersections would coexist. The catenary wire needs to be in direct contact with the LRT vehicle, so it must be the lowest overhead object at an

intersection. MDOT requires a minimum of 17 feet from the road surface to the bottom of the signal heads to avoid collisions with high-load vehicles, while still maintaining signal head visibility for drivers. A similar height would be needed for the low point of the catenary wire over intersections. The clearance needed between the LRT catenary wire and any other surface is six feet in every direction. MDOT currently uses this clearance for primary electrical lines.

There are two options for signal head mounting: mast arms or span wires. With the median-running LRT, mast-arm placement could be designed so that the end of the mast arm would stop short of the LRT alignment and would not encroach into the clear zone around the catenary wires.

With span-wire installation, the wire that supports the signal heads going across Woodward Avenue would need to be a minimum of six feet above the catenary wire. However, the bottom of the signal head would still need to be 17 to 19 feet above the roadway to maintain proper visibility for motorists. Given a minimum span-wire height of 23 feet, and a typical signal-head height of three to four feet, extenders would be required of up to three feet in length to allow the signal head to hang further below the span wire in a position suitable for motorist visibility.

The details of signal design and configuration would be defined during the design phase of project development. Within Downtown Detroit, all signalized intersections require mast arm mountings based on a City of Detroit ordinance.

6.10.2 Snow Removal

The LRT vehicles would be capable of running in snow, as they would push snow from the tracks. In heavy snow conditions, the LRT trains may need to run at a higher service frequency to keep the tracks clear or may need to be run overnight for the same purpose. Snow removal from general-use lanes would not change from the existing condition. Snow from travel lanes should not be piled at station locations due to ADA requirements, so some snow hauling may be necessary to keep these areas clear.

6.10.3 Bridge Overpass Configurations

There are three bridges between I-75 and State Fair Avenue, which carry Woodward Avenue over the following freeways:

- I-75 Fisher Freeway
- I-94 Ford Freeway
- M-8 Davison Freeway

The bridge overpasses for the I-75 Fisher Freeway and I-94 Ford Freeway overpasses have the same configuration. Currently, these overpasses have 90 feet of pavement width between the curbs and 15-foot-wide sidewalks on each side. Parking would not be allowed on any of the overpasses. Each of the three overpasses is discussed below.

I-75 Fisher Freeway Overpass

Currently there are 50-foot-long left-turn lanes on the I-75 Fisher Freeway overpass. These left-turn lanes would be maintained with the median-running LRT. Therefore, there would be six 11-foot-wide general-use lanes on the overpass with a two-foot-wide distance added between the outside lane and the sidewalk, with the 28-foot-wide LRT rail guideway between the northbound and southbound lanes. This totals 98 feet, which exceeds the existing 90-foot curb-to-curb width, and may require that the sidewalks be narrowed by approximately four feet on each side.

The resulting sidewalk width would be 11 feet on each side of the roadway. Narrowing the LRT guideway from 28 feet was also considered, to provide additional width on the bridges. However, upon considering an LRT vehicle's width, dynamic envelope, and space for a catenary pole between two LRT tracks, this change would result in a gain of only about one foot. Figure 6-29 illustrates the proposed cross-section of the I-75 Fisher Freeway overpass.

To eliminate the need to reduce the sidewalk width, a design exception would be required to allow 10-foot-wide travel lanes on the overpass for a distance of approximately 310 feet. Such design options would be explored further in the design phases of project development.

Figure 6-28. Cross-Section over I-75 Fisher Freeway

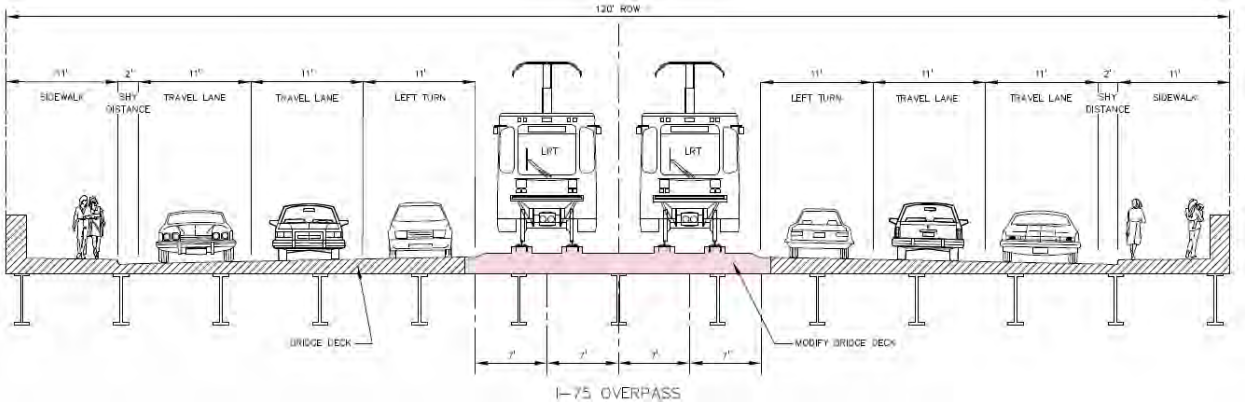

Source: URS Corporation, 2011

I-94 Ford Freeway Overpass

Currently there is a northbound left-turn-only lane on the I-94 Ford Freeway overpass. In order to retain this left-turn lane with the median-running LRT, the cross-section would comprise 13-foot-wide outside general-use lanes, one 12-foot-wide general-use lane, an 11-foot-wide left-turn lane, and an 11-foot-wide general-use lane. The LRT guideway would be 28 feet wide between the northbound and southbound lanes. This totals 94 feet, leaving an additional six feet of roadway pavement available for shoulder space (Figure 6-30). No modifications to the existing sidewalk width or curb lines would be necessary.

The current SEMCOG Regional Transportation Plan includes expansion of I-94 between I-96 and Connor Avenue by one lane in each direction. The Woodward Avenue bridge over I-94 would need to be reconstructed to accommodate this widening.

Figure 6-30. Cross-Section over I-94 Ford Freeway

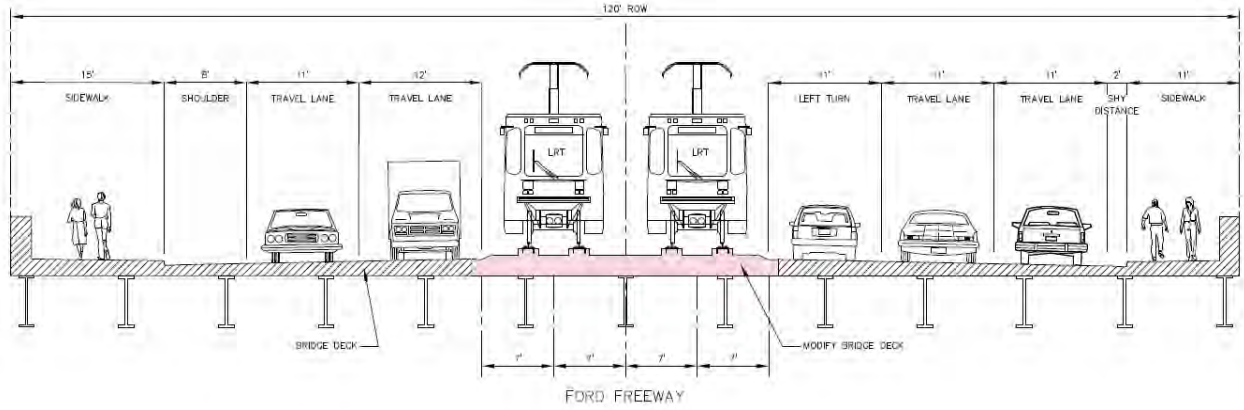

Source: URS Corporation, 2011

M-8 Davison Freeway Overpass

The M-8 Davison Freeway overpass is currently 104 feet wide, with 80 feet of curb-to-curb roadway width, and a 10-foot-wide sidewalk on the west side and 14-foot-wide sidewalk on the east side. Left-turns are not allowed from Woodward Avenue onto either of the service drives. As a result, the proposed cross-section includes two 13-foot-wide outside general-use lanes, two 11-foot-wide general-use lanes, and the 28-foot-wide LRT rail guideway between the northbound and southbound lanes, for a total of 76 feet in width. This leaves an additional four feet of width available for a shoulder. The sidewalk width and curb lines would not be affected at this location. Figure 6-31 illustrates the cross-section of the M-8 Davison Freeway overpass with the median-running LRT.

Figure 6-29. Cross-Section over M-8 Davison Freeway

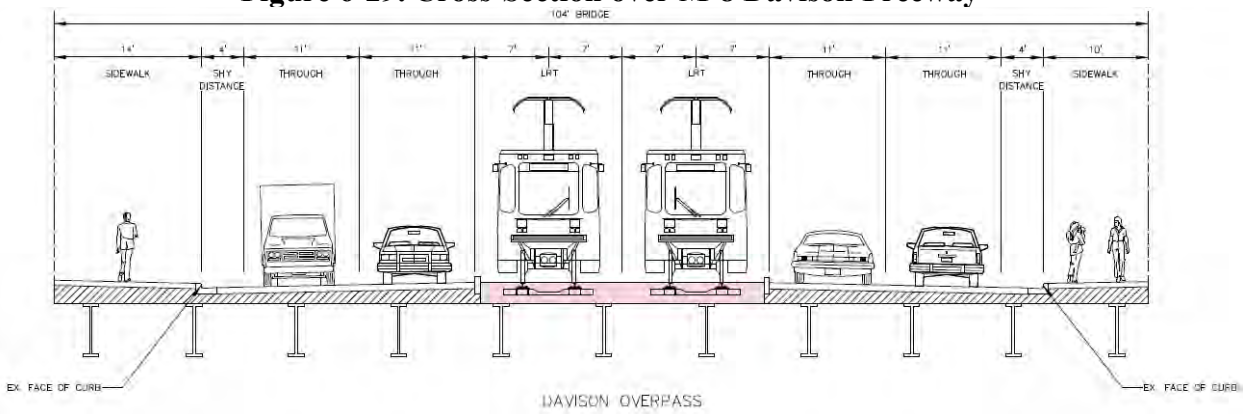

Source: URS Corporation, 2011

6.10.4 Long-Term Construction Impacts to Woodward Avenue

Future rehabilitation or reconstruction of the Woodward Avenue Corridor after completion of the LRT construction must consider maintenance of both automobile and LRT traffic. While automobile traffic can be transitioned from lane to lane or detoured to other routes to accommodate construction activity, the LRT operates on a fixed rail guideway, and options to transition or detour LRT traffic are therefore limited. In general, for major reconstruction activities, it is proposed that part-width construction be utilized, with a minimum of one

automobile travel lane in each direction on one side of the road, along with a single LRT rail guideway maintained. Two-way LRT traffic would be maintained on the single guideway with strategically placed crossover rails and train signals installed during the initial construction. This operation would likely require prohibition of left turns along the Corridor due to limited space to provide left-turn storage. Depending on the nature of the construction activity, it may not be possible to maintain LRT traffic in one or both directions. In that case, operation of LRT in the peak direction only may be considered, with enhanced bus operations serving the off-peak direction. In some cases, use of buses may be required to serve LRT users should the LRT need to be taken out of service entirely due to construction activities.

6.11 Vehicle Storage and Maintenance Facility Sites

The Preferred Alternative would have two VSMF sites. One would be a temporary facility constructed on the 4.6-acre Amsterdam Street site for use during the first phase of Project construction; this facility would likely be demolished once the second, permanent VSMF is constructed. The permanent VSMF would be located on the 19-acre Highland Park Ford Plant site. As this site is about 900 feet east of Woodward Avenue, direct access to the site would be via the right of way for CR's currently abandoned rail line.

7.0 Other Alternatives

This chapter summarizes transportation conditions on Woodward Avenue that would result with Alternatives A1, B2 and B3, including potential parking, safety, transit and traffic impacts.

As described in Chapter 2.0, Alternative A1 would be median-running (Operating Option A) from the Northbound I-75 Service Drive to the Michigan State Fairgrounds. Alternatives B2 and B3 would be curb-running (Operating Option B) from Adams Street to Piquette Street, at which point they, also, would be median-running to the Michigan State Fairgrounds. The curb-running operating option was refined, based on comments received on the DEIS and additional transportation analyses conducted for the FEIS. Alternatives A1, B2, and B3 have different alignments within Downtown Detroit (Chapter 2.0), described below.

7.1 Alternative A1

The following section describes Alternative A1 within Downtown Detroit. North of Downtown, the alternative would be median-running and identical to the Preferred Alternative (Chapter 6.0, Section 6.1) with the exception of the LRT station locations.

Woodward Avenue between Northbound I-75 Service Drive and Park Avenue/Witherell Street (~0.2 miles)

The existing right-of-way (ROW) between the Northbound I-75 Service Drive and Park Avenue is 120 feet wide, with 90 feet of curb-to-curb roadway width and 15-foot-wide sidewalks on each side of the avenue. The A1 alignment through this segment would be median-running, with two 11-foot-wide general-use lanes in each direction, the 28-foot-wide LRT rail guideway and 11-foot-wide exclusive left-turn-only lanes for both directions of travel at the intersection of Woodward Avenue and Montcalm Street. The intersection of Woodward Street at Elizabeth Street would become right-in/right-out-only due to the LRT station location between Elizabeth and Columbia streets (Figure 7-1). The signal at the intersection of Elizabeth Street would become a pedestrian-only signal. At the Woodward Avenue intersections with Adams Street and Park Avenue/Witherell Street, there would be an exclusive left-turn lane in one direction only. There would be no on-street parking in this section.

Figure 7-1. Foxtown/Stadium Station Cross-Section

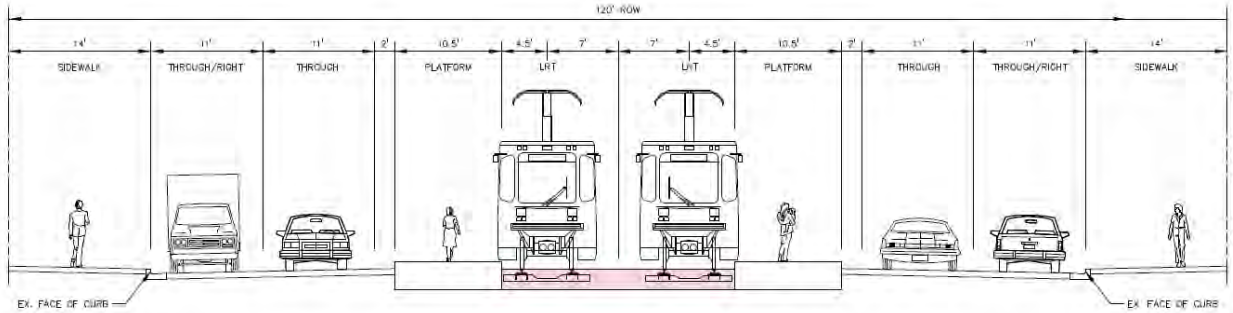

Source: URS Corporation, 2011

Woodward Avenue between Park Avenue/Witherell Street and Grand River Avenue (~0.2 miles)

The existing ROW along Woodward Avenue south of Park Avenue/Witherell Street is 110 feet wide. For purposes of the traffic analysis, it was assumed that the LRT would operate in an

exclusive median-running lane in this section. The proposed cross-section would include two 11-foot-wide general-use lanes and a 28-foot-wide LRT rail guideway. This would require removal of one foot of width from the sidewalks on the west and east sides of Woodward Avenue, reducing the sidewalks to 22 and 39 feet widths, respectively (Figure 7-2). It was assumed that all movements would be allowed at all signalized intersections. The laneage on northbound Woodward Avenue at Grand River Avenue would comprise one northbound through lane and one right-turn-only lane. Parking could be maintained on the east side of Woodward Avenue where there would not be a station location.

Figure 7-2. Median Running Exclusive-Lane Cross–section on Woodward between Park Avenue/Witherell Street and Grand River Avenue

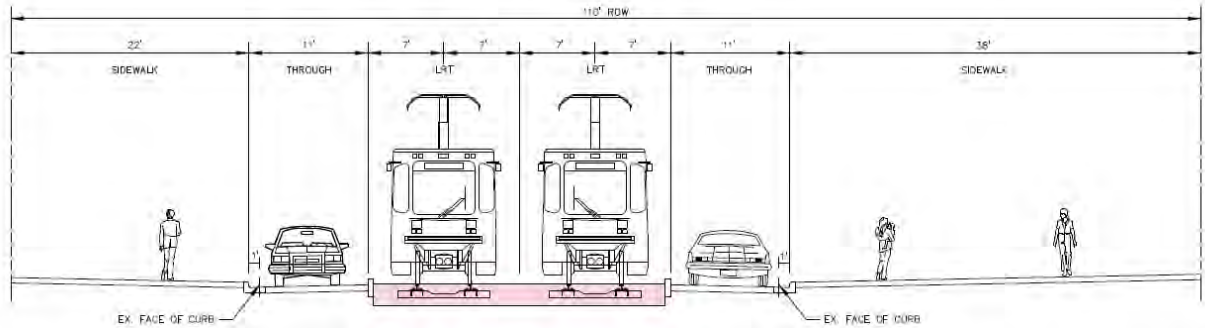

Source: URS Corporation, 2011

Grand River Avenue between Woodward Avenue and Washington Boulevard (~0.1 miles)

The existing ROW along Grand River Avenue between Woodward Avenue and Washington Boulevard is approximately 60 feet wide. The existing curb-to-curb roadway width is 38 feet, with 11-foot-wide sidewalks on each side of the roadway. Along most of this segment of Grand River Avenue, adjacent buildings have no setback from the ROW. Grand River Avenue is one-way eastbound, with parking allowed in some locations on either the north or south side of the street. The cross-section of Grand River Avenue changes from three travel lanes between Washington Boulevard and Griswold Street to two travel lanes between Griswold Street and Woodward Avenue.

With the proposed LRT, there would be one 11-foot-wide lane general-use lane along the northern side of Grand River Avenue, while the southern side would have a 27-foot-wide exclusive LRT rail guideway. The sidewalks would remain 11 feet wide on either side. Figure 7-3 illustrates the proposed cross-section for Grand River Avenue east of Washington Boulevard.

There is an entrance and exit to a parking structure located along the south side of Grand River Avenue between Griswold Street and Woodward Avenue. As this is the only access to this parking structure, it would be necessary to maintain access across the LRT guideway. Design features to accommodate this access may include gates or a specialized traffic signal or sign to make drivers aware of an approaching LRT vehicle.

Figure 7-3. Exclusive-Lane Cross-Section on Grand River Avenue between Woodward Avenue and Washington Boulevard

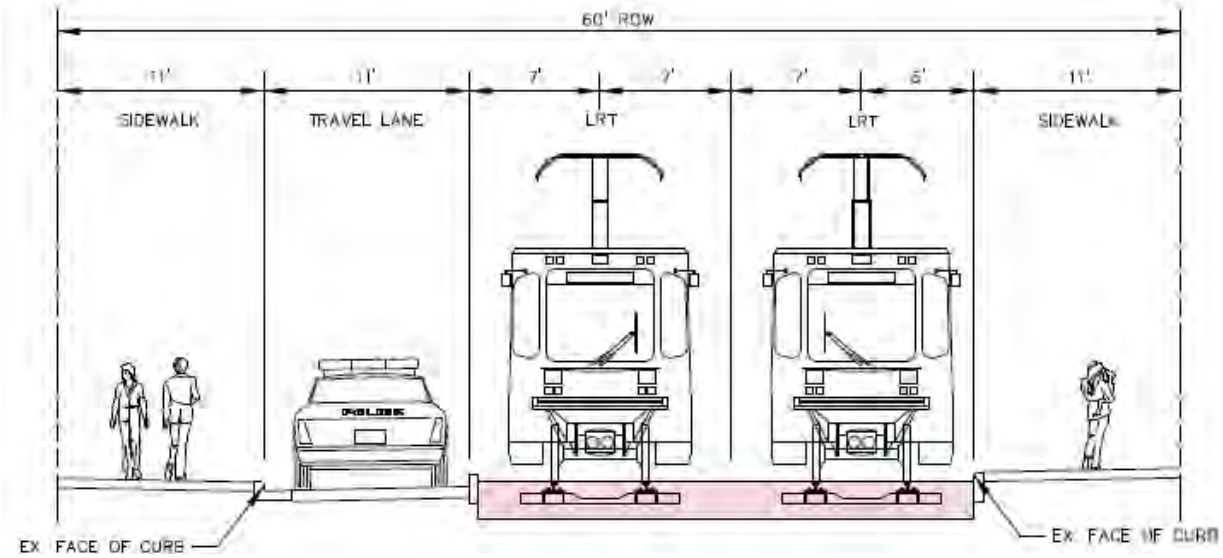

Source: URS Corporation, 2011

Since Grand River Avenue would only have one eastbound lane between Washington Boulevard and Woodward Avenue, one of the existing travel lanes must terminate at Washington Boulevard. The laneage on Grand River Avenue approaching Washington Boulevard from the west would comprise two eastbound approach lanes, with one serving as a shared through/left-turn-only lane, and the second lane as a right-turn-only lane (not shown). The signals along Grand River Avenue between Washington Boulevard and Woodward Avenue would be optimized for progression along Grand River Avenue.

Washington Boulevard between Grand River Avenue and Michigan Avenue (~0.1 miles)

The existing ROW along Washington Boulevard in this section is 190 feet wide, with a 60-foot-wide landscaped median separating northbound and southbound lanes. The curb-to-curb width of both the northbound and southbound roadways is 43 feet, which includes two travel lanes and on-street parking on both sides of the roadway. Existing sidewalks are approximately 21 feet wide on the west side and 23 feet wide on the east side of Washington Boulevard.

The LRT track would run within the existing inside parking lanes of the northbound and southbound roadways. The existing 60-foot-wide landscaped median would be maintained, except at the proposed LRT station location between Grand River Avenue and State Street, where the station platform would be located within the median. The cross-section of each side of the roadway would consist of a 12-foot-wide dedicated rail guideway within the inside lanes, two 11-foot-wide general-use lane and one eight-foot-wide parking lane on the outside of the roadway (Figure 7-4).

Washington Boulevard between Michigan Avenue and Larned Street (~0.3 miles)

South of Michigan Avenue, the existing ROW width along Washington Boulevard narrows to approximately 80 feet, with the curb-to-curb roadway width varying from 55 to 60 feet, and the sidewalk width varying from eight to 12 feet on either side of the road. The roadway consists of two 11- to 12-foot-wide general-use lanes in each direction, and one 11- to 12-foot-wide left-turn-only lane at the signalized intersections.

Figure 7-4. Cross-Section of Washington Boulevard North of Michigan Avenue

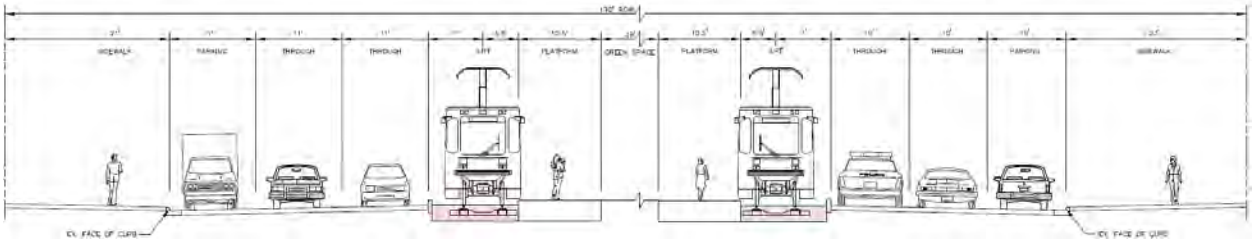

Source: URS Corporation, 2011

With the median-running LRT, the roadway would comprise one 10- to 11-foot-wide general-use lane in each direction, one 10-foot-wide left-turn-only lane in one direction at each intersection, and a 28-foot-wide LRT rail guideway between the northbound and southbound lanes. With this configuration, the sidewalk may need to be reduced by one to two feet of width per side, depending on the existing roadway width. Figure 7-5 illustrates the proposed cross-section at one of the signalized intersections with a dedicated left-turn-only lane in one direction.

Figure 7-5. Cross-Section of Washington Boulevard South of Fort Street

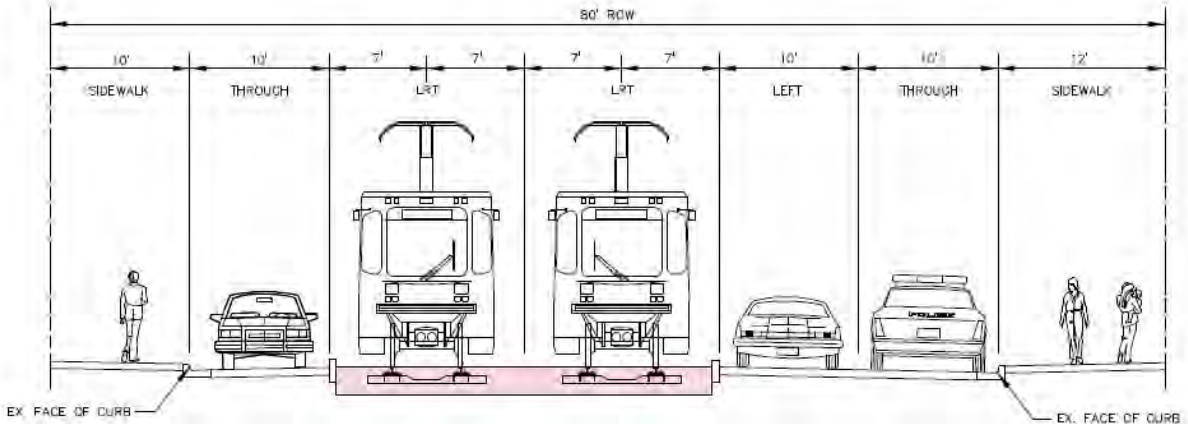

Source: URS Corporation, 2011

An exclusive left-turn-only lane could only be accommodated in one direction along Washington Boulevard in this section. Based on review existing traffic volumes at each of the intersections along Washington Boulevard in this section, the following locations would have exclusive left-turn-only lanes:

- Southbound Washington Boulevard at Lafayette Boulevard
- Northbound Washington Boulevard at Fort Street (M-85)
- Northbound Washington Boulevard at Congress Street
- Southbound Washington Boulevard at Larned Street

Traffic volumes dictate that a left-turn lane would be needed for both northbound traffic at Congress Street and southbound traffic at Larned Street. Therefore, there would be two 11-foot-wide northbound lanes at Congress Street, one of which would be a left-turn-only lane and one a through lane (Figure 7-5). There would be two 11-foot-wide southbound lanes at Larned Street, one left-turn-only lane and one through lane (Figure 7-6).

Figure 7-6. Cross-Section of Washington Boulevard at Larned Street

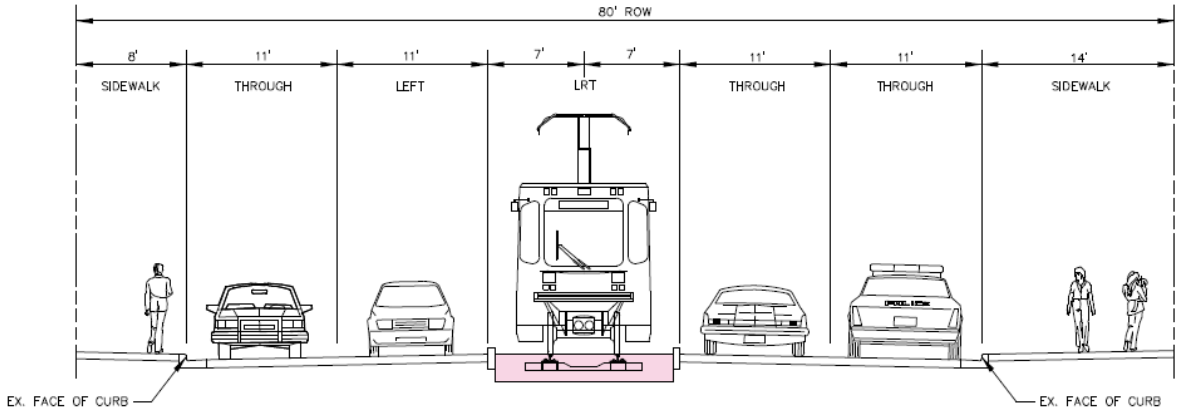

Source: URS Corporation, 2011

Larned Street between Washington Boulevard and Randolph Street (M-3) (~0.4 miles)

The existing ROW along Larned Street is 60 feet wide between Washington Boulevard and Randolph Street, with a curb-to-curb roadway width of 40 feet and 10-foot-wide sidewalks on each side. Larned Street operates one-way eastbound and generally has three 10- to 11-foot-wide travel lanes. There is some on-street parking on the north side of the roadway west of Griswold Street, and a major bus stop transfer point on the south side of the roadway just east of Woodward Avenue. There is also some on-street parking permitted on the south side of Larned Street just west of Randolph Street.

The single LRT guideway would run along the south side of Larned Street and would occupy an 18-foot-wide lane, which would sit alongside two 11-foot-wide general-use lanes. It is expected that the sidewalk width and curb line on the north side of Larned Street would not change. The sidewalk on the south side of the roadway may need to be narrowed by up to four feet at LRT station locations. Figures 7-7 and 7-8 illustrate the proposed cross-section of Larned Street with and without a station location, respectively.

Figure 7-7. Cross-Section of Larned/Congress Street with a Station Location

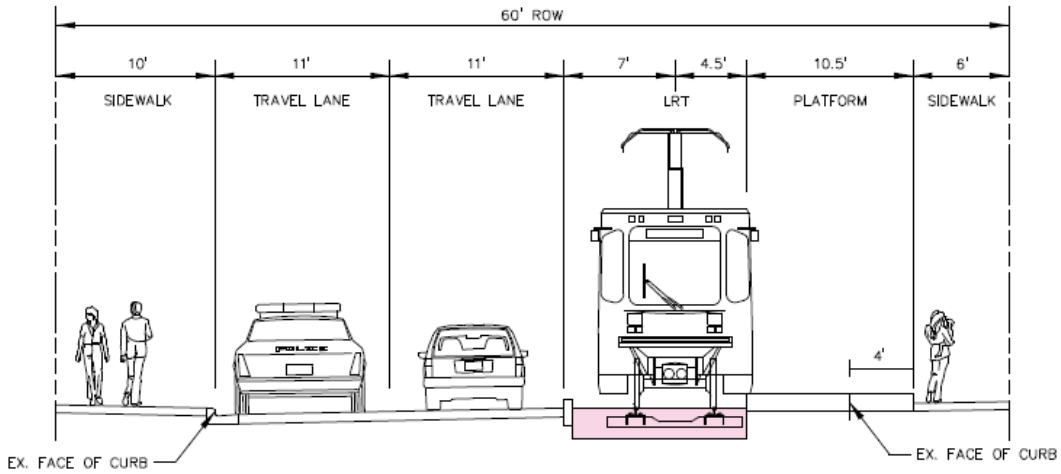

Source: URS Corporation, 2011

Figure 7-8. Cross-Section of Larned/Congress Street without a Station Location

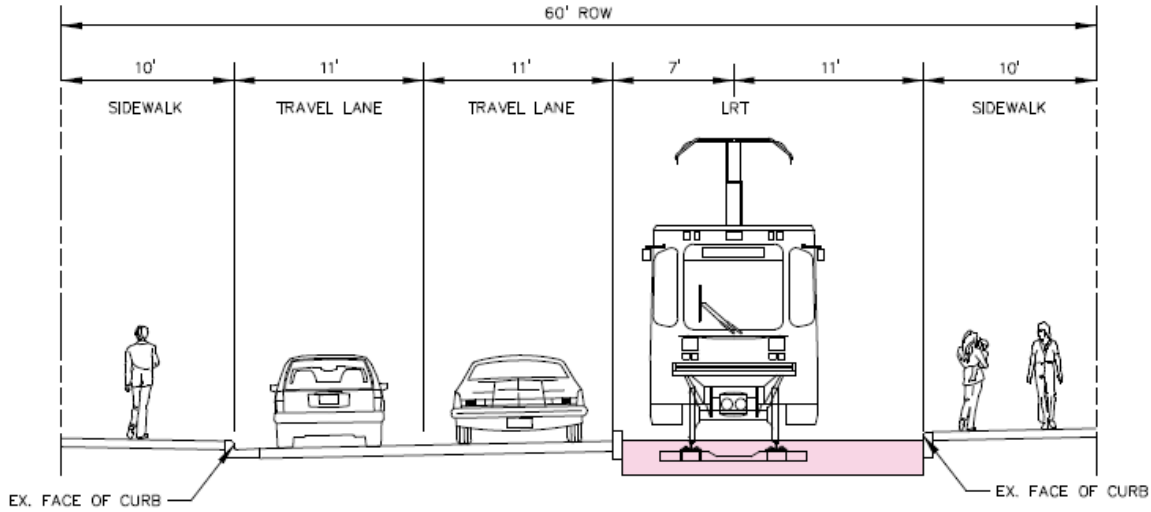

Source: URS Corporation, 2011

Since Larned Street would have only two eastbound lanes between Washington Boulevard and Randolph Street, one of the existing travel lanes must terminate at Washington Boulevard. Therefore, the laneage on eastbound Larned Street at Washington Boulevard would include a dedicated left-turn-only lane, a through lane, and a shared through/right-turn-only lane. The signals along Larned Street between Washington Boulevard and Randolph Street would be optimized for progression along Larned Street.

Randolph Street (M-3) between Larned Street and Congress Street (~0.1 miles)

Randolph Street (M-3) is a designated State Trunkline roadway under the jurisdiction of MDOT, and has an existing ROW width of approximately 122 feet in this section. There is a 24-foot-wide landscaped median between the northbound and southbound roadways, each of which has an existing curb-to-curb width of 34 feet. Parking is allowed along the outside in both the northbound and southbound roadways. Existing sidewalks on both the east and west sides of the roadway are approximately 11 to 19 feet wide. There are median breaks to allow u-turn movements before the intersections.

The proposed LRT would require a 14- foot-wide rail guideway in the northbound direction, which would be constructed within the landscaped median. Therefore, the cross-sections and lane use of the northbound and southbound roadways would not change with introduction of the LRT. Figure 7-9 illustrates the cross-section of the roadway in this section.

Congress Street between Randolph Street (M-3) and Washington Boulevard (~0.4 miles)

Between Randolph Street and Woodward Avenue, the curb-to-curb roadway width of Congress Street is 40 feet, with three to four 10-foot-wide travel lanes, and parking provided in some locations on the north side. Between Woodward Avenue and Griswold Street, the curb-to-curb roadway width is 45 feet, with three 11- to 12-foot-wide travel lanes and parking on the south side. Between Griswold Street and Washington Boulevard, the curb-to-curb roadway width is 35 feet, with two 12-foot-wide travel lanes and parking on the south side. The sidewalk width varies throughout the section, with a typical width of approximately 12 feet on the south side and between 9 and 13 feet on the north side. Congress Street operates one-way westbound.

Deliveries occasionally occur on the north side of the street between Griswold Street and Washington Boulevard.

Figure 7-9. Cross-Section of Randolph Street (M-3)

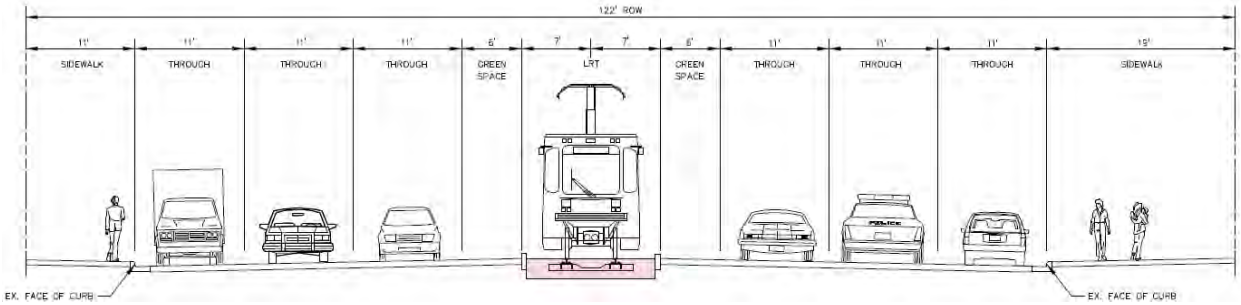

Source: URS Corporation, 2011

The LRT guideway would run along the north side of the roadway between Randolph Street and Woodward Avenue (not shown) and transition to the south side of the roadway west of Woodward Avenue (Figures 7-7 and 7-8). The LRT rail guideway would occupy an 18-foot-wide lane. As a result, Congress Street would be reduced to two 11-foot-wide general lanes throughout the section between Randolph Street and Washington Boulevard. It is expected that the sidewalk width and curb line on the south side of the roadway between Randolph Street and Woodward Avenue and on the north side between Woodward Avenue and Washington Boulevard would not be affected. The sidewalk may need to be narrowed by up to four feet in width at LRT station locations.

As Congress Street would have only two westbound lanes between Randolph Street and Washington Boulevard, one of the existing travel lanes must terminate at Randolph Street. The laneage on westbound Congress Street at Randolph Street would include a dedicated right-turn-only lane, a through lane, and a shared through/left-turn-only lane.

Downtown Intersection Signal Changes

The following modifications to signalization are proposed with Downtown Design Option 1, for Alternative A1:

- The signalized intersections along Woodward Avenue between Campus Martius and Park Avenue/Witherell Street would have a cycle length of 90 seconds and would be optimized for progression along Woodward Avenue for peak traffic.
- Left turns are proposed to be prohibited at unsignalized intersections, which includes Montcalm and Columbia streets. All types of turns would be permitted at signalized intersections.
- At intersections with left-turn lanes, a protected left-turn phase would be added with vehicle detection. The left-turn phase would be initiated only when a vehicle is present, and would typically be a lagging protected left-turn phase. LRT trains would be allowed through the intersection when the parallel movement has a green light.

In addition, LRT-only phases are proposed at the following intersections, listed from north to south:

- Woodward Avenue and Clifford Street/John R Street – due to one lane in each direction on Woodward Avenue

- Woodward Avenue and Grand River Avenue – due to turn
- Grand River Avenue and Griswold Street – due to one lane on Grand River
- Washington Boulevard and Grand River Avenue – due to turn
- Washington Boulevard and State Street – due to lack of turn lanes
- Washington Boulevard and Michigan Avenue – due to lack of turn lanes
- Larned Street / Congress Street and Shelby Street – due to lack of turn lanes
- Larned Street / Congress Street and Griswold Street – due to lack of turn lanes
- Larned Street / Congress Street and Woodward Avenue – due to lack of turn lanes and transition from north to south side on Congress Street
- Larned Street and Randolph Street (M-3) – due to turn
- Congress Street and Randolph Street (M-3) – due to turn
- Congress Street and Washington Boulevard – due to turn

Station Locations

The 16 LRT stations proposed with Alternative A1 from Downtown Detroit to State Fairground are as follows:

- Randolph Street Station: Larned at Randolph and Congress at Randolph
- Cobo Center Station: Larned at Washington and Congress at Washington
- Rosa Parks Transit Center Station
- Grand River Avenue Station
- Foxtown/Stadium Station
- MLK Jr. Boulevard/Mack Avenue Station
- Warren Avenue Station
- Piquette Street/Amtrak Station
- Grand Boulevard Station
- Hazelwood Street/Holbrook Street Station
- Trowbridge Street/Calvert Street Station
- McLean Street Station
- Manchester Boulevard Station
- McNichols Road Station
- 7 Mile Road Station
- State Fair Station

The Grand River Avenue Station, which was added to Alternative A1 in response to stakeholder input following the DEIS, is described below.

Grand River Avenue Station

This station, proposed to be located along Woodward Avenue between Clifford Street/John R Street and Grand River Avenue would be a median-running center station with a shared platform (Figure 7-10).

Figure 7-10. Median-Running Grand River Avenue Station

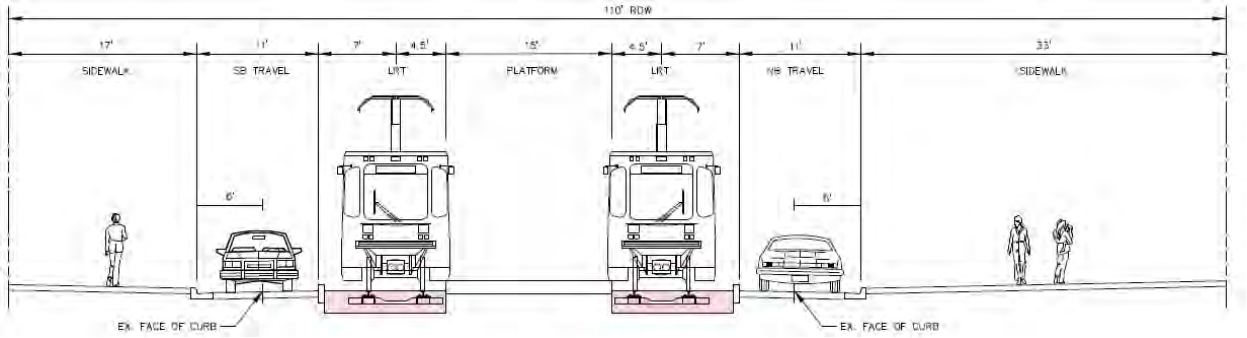

Source: URS Corporation, 2011

7.1.1 Transit Service, Safety, and Security

The refinement to bus transit with Alternative A1 would be the same as with the Preferred Alternative (Chapter 6.0, Section 6.2).

Alternative A1 would have a station within a five-minute walk of the Rosa Parks Transit Center and a station within a five-minute walk of a Detroit People Mover station.

The LRT vehicle would operate at the posted speed limit of the roadway on which it is travelling. Within Downtown Detroit, the posted speed limit on all roadways is 25 mph south of Adams Street and 30 mph north of Adams Street; however, it is not expected that the LRT would exceed 15 mph due to short spacing between stations and curves.

7.1.2 Non-Motorized Facilities and Safety

Changes to existing non-motorized facilities and safety along the Corridor north of the Northbound I-75 Service Drive would be the same as with the Preferred Alternative (Chapter 6.0, Section 6.3).

Sidewalk margin widths for each section along the alignment in Downtown are discussed in Section 7.1. Proposed sidewalk widths would all meet and, in most cases exceed, the six foot minimum defined in the agreed-upon design principles (Chapter 5.0). Within Downtown Detroit, the signal at Elizabeth Street and Woodward Avenue would be changed to a pedestrian-only signal from a fully signalized intersection with the LRT. This is to provide access to the station platform north of Elizabeth Street, which would become right-in/right-out-only for traffic.

There are currently no designated bicycle lanes or bicycle routes within Downtown Detroit (Chapter 3.0). Due to narrow roadway widths, the addition of bicycle lanes in Downtown is not feasible. However, the speed limit in Downtown is 25 mph, and the average vehicle speed is expected to be less than 25 mph. The lower speeds in Downtown make it easier for cyclists to mix with vehicle traffic safely, and bicycle lanes may not be necessary to improve safety conditions. Conflicts between the LRT vehicles and bicycles would occur whenever a bicycle crosses the LRT path, either when the cyclist is turning left or the LRT vehicle route makes a right-hand turn.

7.1.3 Motor Vehicle Safety

Changes to existing motor vehicle safety along the Corridor north of the Northbound I-75 Service Drive would be the same as with the Preferred Alternative (Chapter 6.0, Section 6.4).

Compared with the portion of the Corridor north of I-75, there would likely be more interaction between LRT vehicles and other vehicles in Downtown due to the narrower roadway widths and the likelihood that it would be necessary for the rail guideway to be level with the adjacent general-use lane. Separation between the rail guideway and the general-use lane may be confusing to motorists along these roadways, causing an increase in sideswipe crashes. Mitigation for this may include addition of colored pavement treatments for the rail guideway or of bollards between the LRT guideway and the general-use lane to let motorists know the rail guideway is for the LRT train only. Conflicts between LRT vehicles and other vehicles may also occur in locations where the LRT vehicle crosses other vehicle paths to make a turn. At these locations, an LRT-only phase would be added to the traffic signal.

7.1.4 Parking

Changes to existing parking along the Corridor north of Grand Boulevard would be the same as with the Preferred Alternative (Chapter 6.0, Section 6.5). With Alternative A1, the number of parking spaces along Woodward Avenue and in Downtown would be impacted. The estimate of existing parking spaces and the number of parking spaces with Alternative A1 (Table 7-1) is based on updated information on the alignments, including station areas, typical cross-sections and transition areas. An average approximate parking space length of 20 feet was used to estimate the number of parking spaces; however, this may vary due to bus stop locations, fire hydrants and driveway locations.

Table 7-1. Estimated Parking Spaces with Alternative A1

Section	Existing	Alternative A1	Net Change
Larned between Washington and Griswold	12	0	-12
Larned between Griswold and Randolph	0	0	0
Randolph between Congress and Larned	14	14	0
Congress between Randolph and Griswold	3	0	-3
Congress between Griswold and Washington	17	0	-17
Washington between Michigan and Larned	2	0	-2
Washington between State and Michigan	15	2	-13
Washington between Grand River and State	40	13	-27
Grand River between Woodward and Washington	7	0	-7
State between Woodward and Washington	0	0	0
Woodward between Larned Street and Campus Martius	3	3	0
Woodward between Campus Martius and State	6	6	0
Woodward between State and Grand River	8	8	0
Woodward between Grand River and Adams	10	10	0
Woodward between Adams and I-75	0	0	0
Woodward between I-75 to Alexandrine	137	190	+53
Woodward between Alexandrine to Kirby	145	114	-31
Woodward between Kirby to Piquette	68	39	-29
Woodward between Piquette to Grand	46	0	-46
Woodward between Grand to Clairmount	126	0	-126
Woodward between Clairmount to McLean	187	0	-187
Woodward between McLean to Sears	81	29	-52
Woodward between Sears to McNichols	48	0	-48

Section	Existing	Alternative A1	Net Change
Woodward between McNichols to 7 Mile	98	321	+223
Woodward between 7 Mile and 8 Mile	27	258	+231
Total	**1,100**	**1,007**	**-93**

Source: Parsons Brinckerhoff, 2011

Locations where parking would be removed with Alternative A1 and not replaced are discussed below.

Parking in Downtown Detroit

Along all the Project alignments, there is a total of 137 parking spaces in Downtown Detroit. With Alternative A1, there would be 56 parking spaces, a net loss of 81 spaces in Downtown.

There are currently more than 29,000 parking spaces available in public parking structures in Downtown Detroit (Figure 7-11). Current parking rates range from $1 per hour for metered on-street parking and up to $4 per hour within parking structures. According to the City of Detroit Municipal Parking Department, which operates six of these garages, the average weekday utilization of the garages ranges from 50 to 75 percent, varying by location of facility. Given these utilization rates, it is likely that these public parking structures, supplemented by on-street parking within one block of locations where parking spaces would be lost and other available surface parking lots would have adequate available parking within Downtown Detroit to offset parking space losses. The cost to park may increase over time due to the reduction of on-street parking availability within Downtown.

Figure 7-11. Existing Parking Structures Located in Downtown Detroit

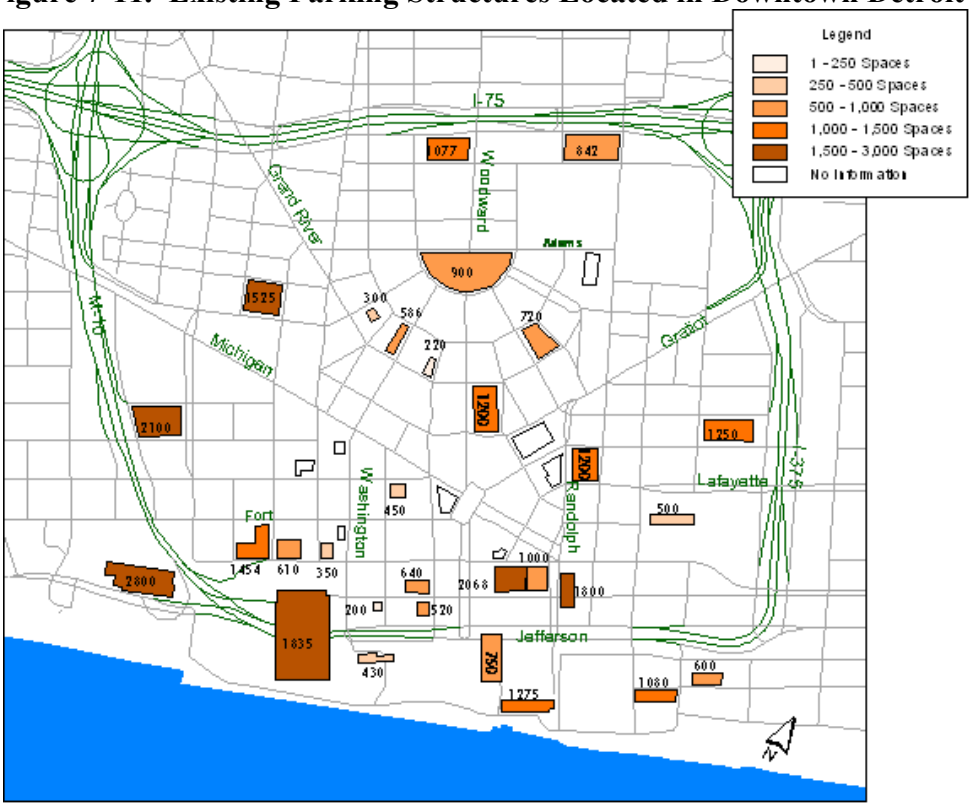

Source: Downtown Detroit Transportation Master Plan, 2004

Parking Along Woodward Avenue from I-75 to Kirby Street

Within this section of Woodward Avenue, there are currently 282 parking spaces, of which 92 are metered. It is anticipated that, with Alternative A1, 22 parking spaces would be added between I-75 and Kirby Street, resulting in a total of 304 parking spaces. This is because the removal of some signals along the Woodward Avenue Corridor would enable the addition of parking spaces.

Between I-75 and Alexandrine Street, there are currently 137 parking spaces, 26 of which are metered. With Alternative A1, this area would gain 53 additional parking spaces. There are currently 145 parking spaces between Alexandrine and Kirby streets, 66 of which are metered. Alternative A1 would eliminate some of the on-street parking in this section, resulting in 116 total spaces.

There are currently 28 and 37 active businesses located on the east and west sides, respectively, of Woodward Avenue, for a total of 65 businesses in this section. All of the businesses on the west side of Woodward Avenue would have either nearby on-street parking along Woodward Avenue or have an adjacent parking lot; therefore, there would be no long-term parking-related impact to these businesses.

On the east side of Woodward Avenue, north of Willis Avenue, there are four businesses that currently have adjacent on-street parking. They would not have adjacent on-street parking on Woodward Avenue with Alternative A1 and do not have access to an adjacent parking lot. Figure 7-12 illustrates the locations of these businesses and the parking along Woodward Avenue.

These four businesses include a restaurant, a small retail store, a produce shop, and a pizza shop. There are currently nine unmetered parking spaces located in front of these businesses. Parking is allowed on Willis Avenue east of Woodward Avenue and is also unmetered. Mitigation for these lost spaces on Woodward Avenue in front of these businesses could be provided by metering of at least nine parking spaces along Willis Avenue. Replacing unmetered parking with metered parking causes the space to be available more often and discourages all-day parking at an unmetered parking space. The metering of these spaces is recommended to be shorter in duration (e.g., one hour) to encourage more turnover of the spaces for these businesses.

There are no other businesses on the east side of Woodward Avenue in this section that would have parking impacts.

Figure 7-12. Parking along Woodward Avenue North of Willis Avenue

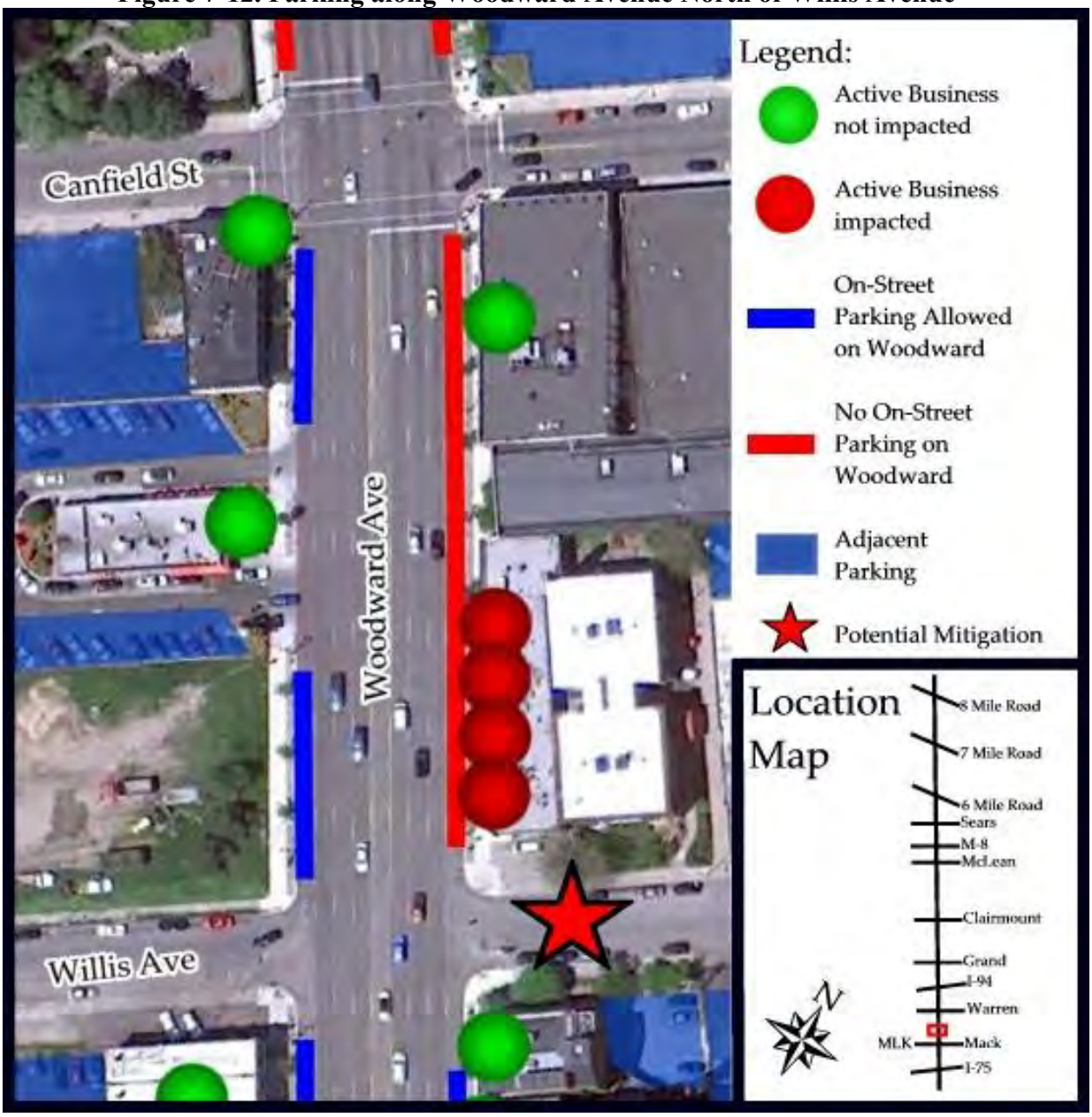

Source: Google Earth and Parsons Brinckerhoff, 2011

Parking along Woodward Avenue from Kirby Street to Grand Boulevard

Within this section, there are currently 114 parking spaces, of which 68 are metered. With Alternative A1, 75 parking spaces would need to be removed. All parking between Piquette Street and Grand Boulevard, which currently has 27 metered spaces, would be removed.

There are currently 32 active businesses located on the east side of Woodward Avenue and 11 active businesses on the west side of Woodward Avenue in this section, for a total of 43 businesses. All of the active businesses between Kirby and Milwaukee streets would have either available on-street parking along Woodward Avenue or an adjacent parking lot.

On the east side of Woodward Avenue, north of Milwaukee Street, there are eight businesses that would not have any on-street parking on Woodward Avenue and do not have access to an adjacent parking lot (Figure 7-13).

Figure 7-13. Parking along Woodward Avenue South of Grand Boulevard

Source: Google Earth and Parsons Brinckerhoff, 2011

These eight businesses include clothing stores, beauty supply, and specialty services. There are currently 10 metered parking spaces located in front of these businesses. There are also 10 metered parking spaces along Baltimore Street and unmetered parking along Grand Boulevard east of Woodward Avenue. There is also a 135-space public surface lot located west of Woodward Avenue between Milwaukee Street and Grand Boulevard. Replacing unmetered parking along Grand Boulevard with metered parking would cause the space to be available

more often and discourages all-day parking at an unmetered parking space. It is recommended that the non-metered spaces along Grand Boulevard east of Woodward Avenue be metered with a short duration (e.g., one hour) to encourage more turnover of the spaces for these businesses. The conversion to metered parking along Grand Boulevard along with the availability of a surface lot within a block would offset the impact to parking in this location.

There are no other businesses on the east side of Woodward Avenue in this section that would have parking impacts.

7.1.5 Freight Movement

Changes to existing freight movement along the Woodward Avenue Corridor north of the Northbound I-75 Service Drive would be the same as with the Preferred Alternative (Chapter 6.0).

Within Downtown Detroit, Based, on recent traffic counts, commercial vehicles comprise about 3 percent of total traffic in Downtown Detroit. Much of this is delivery traffic for Downtown businesses and comprises smaller delivery trucks. The addition of LRT would not decrease any of the existing curb radii, meaning that commercial vehicles would be able to complete the same turns that they are able to today. Right- and left-turning analysis of commercial vehicles would be completed during the design phase of project development to verify that these vehicles would be able to complete these movements.

Deliveries along the roadways with the exclusive LRT rail guideway and only one general-use lane in each direction would be prohibited. Deliveries along roadways with two general-use lanes would be restricted during the peak traffic times (7 to 9 a.m. and 3 to 6 p.m.). Deliveries along roadways that have an outside LRT/shared-use lane on both sides of the roadway would be prohibited (Table 7-2).

It is not anticipated that there would be any restrictions for deliveries along Randolph Street. Deliveries would be restricted at locations where there are LRT station locations. Table 7-2 summarizes the expected delivery restrictions by roadway segment with Alternative A1.

Table 7-2. Delivery Restrictions

Section	Alternative A1
Larned between Washington and Griswold	Morning/Evening
Larned between Griswold and Randolph	Morning/Evening
Randolph between Congress and Larned	
Congress between Randolph and Griswold	Morning/Evening
Congress between Griswold and Washington	Morning/Evening
Washington between Michigan and Larned	All-Day
Washington between State and Michigan	Morning/Evening
Washington between Grand River and State	Morning/Evening
Grand River between Woodward and Washington	All-Day
Woodward between Grand River and Adams	All-Day
Woodward between Adams and I-75	Morning/Evening

Source: Parsons Brinckerhoff, 2011

7.1.6 Emergency Vehicles

Impacts to emergency vehicles along the Woodward Avenue Corridor north of the Northbound I-75 Service Drive would be the same as with the Preferred Alternative (Chapter 6.0).

In Downtown, there is one fire station (Engine 1), located at 111 Montcalm Street west of Park Avenue. This fire station is approximately one block from Woodward Avenue. With Alternative A1, there would be signals at the intersections of Woodward Avenue with Northbound I-75 Service Drive and at Park Avenue/Witherell Street. Given the proximity of the signals on either side of the fire station along Woodward Avenue, it is not expected that response times would increase.

According to the Detroit Fire Department (DFD), fire trucks need a minimum of 13 feet and six inches of vertical clearance and a 38-foot turning radius to complete a u-turn. Many of the roadways within Downtown are not currently wide enough to accommodate a fire truck making a u-turn. Alternative A1 would not reduce the number of locations where in-street u-turns for a fire truck are possible. In addition, no roadways would become transit-only with Alternative A1. Detailed investigation during the design phase of project development would determine whether a barrier would be constructed to separate the LRT from other vehicle traffic.

The DFD also indicated that ladder trucks must be set approximately 20 feet from a building face to raise the ladder to access windows on the building face. Given the significant variability in sidewalk width in Downtown, a fire truck would need to occupy the outside or the second general-use lane depending on the street. Depending on the location of the building, the LRT catenary wire may need to be disabled during a fire event. This would result in an impact to LRT operations during any kind of fire event along the alignment in Downtown.

There are no hospitals or emergency rooms in Downtown. Emergency Medical Service (EMS) vehicles would be able to make u-turns at all signalized intersections

7.1.7 Traffic Operations

Much like the Preferred Alternative, Alternative A1 would generally include removal of a lane in each direction of travel along Woodward Avenue between I-75 and State Fair Avenue to accommodate the median-running LRT operation. The configuration of roadways with the LRT in Downtown, including any changes from existing conditions, are described in Section 7.1. Proposed intersection operations with the LRT, the use of Transit Signal Priority (TSP), Project-related impact to vehicles and trucks accessing businesses and homes and traffic operations are discussed below.

Methodology

Traffic volumes and signalization changes north of Downtown with Alternative A1 would be the same as with the Preferred Alternative (Chapter 6.0, Section 6.8). Traffic volumes used to evaluate each of the Downtown Design Options are based on the 2030 No Build traffic volumes (Appendix M). It was assumed that no vehicles would divert to other roadways nor would travelers switch modes due to the proposed LRT. This conservative assumption represents a worst-case scenario, as Downtown roadways generally have surplus capacity and could accommodate additional diverted trips (Chapter 4.0, Figure 4-1). Where left-turn lanes would be removed and/or restricted with Alternative A1, trips were re-assigned to the closest signalized intersection.

Transit Signal Priority

Transit Signal Priority (TSP) along Woodward Avenue north of Downtown would the same as with the Preferred Alternative (Chapter 6.0, Section 6.8). TSP is also proposed at signalized intersections throughout Downtown with all Project alternatives. The assumptions and methodology used for analysis of the Preferred Alternative were used for all Project alternatives. See Chapter 6.0for more information on TSP assumptions and methodology. LRT-only phases were added at various locations (Section 7.1).

Traffic Conditions

The morning and evening peak-hour operational results (level of service and delay) from the VISSIM models for all the signalized intersections with Alternative A1 are summarized in Appendix N of this report. The results are the average of five runs using different random number seeds.

The results of the VISSIM modeling indicate that all signalized intersections would operate at an overall LOS D, which is generally considered acceptable, or better in the morning and evening peak hours. While the overall intersections would operate at an acceptable LOS overall, a number of individual approaches would operate at LOS E during the morning or evening peak hours. These approaches are:

- Westbound Gerald Street – morning peak hour
- Eastbound Buena Vista Street – morning and evening peak hours
- Eastbound Tuxedo Street – morning peak hour
- Eastbound/Westbound Chicago Street/Arden Park Blvd – evening peak hour
- Westbound Holbrook Street – morning peak hour
- Eastbound Putnam Street – evening peak hour

The westbound Buena Vista Street approach to Woodward Avenue would operate at LOS F in the morning peak hour. In the future morning peak hour, there is expected to be 13 vehicles using this approach. A LOS F for this approach is the result of the addition of side-street detection and the low volume of vehicles arriving at the signal. With the proposed cycle length of 120 seconds at this intersection and the low volume, vehicles may need to wait for more than 80 seconds for the green signal, which is the criteria for LOS F. Typically, mitigation is not applied for signalized approaches that have such low traffic volumes.

Table 7-3 summarizes the anticipated travel time for a vehicle to travel along southbound Woodward Avenue between State Fair Avenue and Northbound I-75 Service Drive in the morning peak hour and northbound Woodward Avenue in the evening peak hour.

Table 7-3. Non-LRT Vehicle Travel Time along Woodward Avenue with Alternative A1

Section		Travel Time	
		Southbound in Morning Peak Hour	**Northbound in Evening Peak Hour**
MLK Jr. /Mack	I-75	2 min 45 sec	3 min 23 sec
Warren	MLK Jr. /Mack	2 min 37 sec	4 min 3 sec
Antoinette	Warren	3 min 50 sec	3 min 49 sec
Glendale	Antoinette	6 min 54 sec	7 min 28 sec
McNichols	Glendale	3 min 28 sec	4 min 57 sec
State Fair	McNichols	3 min 12 sec	3 min 48 sec
Total		**22 min 46 sec**	**27 min 28 sec**
Average Speed		**21.1 mph**	**17.5 mph**

Source: Parsons Brinckerhoff, 2011

Under Alternative A1, it would take approximately 23 minutes for a vehicle to travel along southbound Woodward Avenue in the morning peak hour from State Fair Avenue to Northbound I-75 Service Drive (Table 7-3). Northbound, in the evening peak hour, it would take approximately 27 minutes from Northbound I-75 Service Drive to State Fair Avenue. Comparing this to the 2030 No Build condition (Table 4-4), it would take approximately 11 more minutes for a vehicle to travel these sections.

7.1.8 Construction Impacts

Construction-related impacts along the Woodward Avenue Corridor north of the Northbound I-75 Service Drive would be the same as with the Preferred Alternative (Chapter 6.0, Section 6.9). Construction of any of the Project alternatives would take approximately 36 to 42 months and is proposed to occur sequentially in two phases (Chapter 2.0). Detailed maintenance of traffic plans would be prepared during the design phase of project development.

Transit Service

In Downtown, construction of an LRT system would cause some roadways to be either closed or have reduced laneage. As a result, transit service along any roadway that is closed would need to be re-routed to a nearby roadway. Existing traffic patterns would be affected during construction, which would result in longer travel times and may result in temporary detours for some bus routes.

In areas where construction would prevent buses from pulling into existing stops and make it difficult for passengers to reach the buses, bus stops would need to be relocated outside the immediate construction zone and a clear accessible path from the sidewalk through the construction zone would need to be maintained. Where temporary detours or stop relocations are necessary, DDOT and any other affected service provider would issue a Rider Alert, which would be posted at the affected stops, on buses, at schedule distribution outlets and on the DDOT website. Traffic detours for motor vehicles and bicycles would also be posted, as needed.

Motor Vehicle and Non-Motorized

With Alternative A1, crosswalks across Woodward Avenue may need to be closed at signalized intersections while center stations and LRT tracks are under construction. Construction would be staged so that at least one crosswalk would be maintained and signage would be placed to guide pedestrians to available crossing locations. With construction of curb-running stations within Downtown, construction fencing would be placed between the construction zone and the adjoining sidewalk. At curbside LRT stops under construction, a through path would be maintained along the sidewalk behind the construction zone. During the construction of any of the Project alternatives, cyclists would continue to ride in the rightmost traffic lane. Construction would likely result in reduced vehicle travel speeds, allowing cyclists to mix with vehicle traffic more safely.

Parking

Construction of the LRT along the Woodward Avenue Corridor would be completed in two phases. Phase 1 would entail construction of the southern section between Downtown and Grand Boulevard. Phase 2 would entail construction of the northern segment of the Woodward Avenue LRT Project, from Grand Boulevard to the Michigan State Fairgrounds. During Phase 1, construction of the LRT within Downtown Detroit would cause the loss of all parking during any construction staging. This is due to the narrower roadway widths and the possibility of some roadway closures during construction. Access to businesses would be maintained during all phases and stages of construction.

Construction of the LRT between Adams Street and Grand Boulevard during Phase 1 would entail closing half of Woodward Avenue during a construction stage. One travel lane along Woodward Avenue would be maintained in each direction and left-turn lanes would be maintained at signalized intersections. Left-turn access at unsignalized intersections may not be maintained. On-street parking may be feasible between signalized intersections only on the side of the roadway where traffic is maintained. On-street parking on the other side would not be maintained.

Between Grand Boulevard and McNichols Road, Phase 2 construction of the LRT would entail closing half of Woodward Avenue during a construction stage. One travel lane along Woodward Avenue would be maintained in each direction. Left-turn lanes may not be provided and left-turns along Woodward Avenue could be restricted. Parking would be removed during construction in this section.

North of McNichols Road, Phase 2 construction may entail closing the inner-most lanes of Woodward Avenue for the construction of the LRT guideway. Crossovers would be closed during construction, causing vehicles to travel to the next crossover to turn around. Parking along Woodward Avenue could be maintained but may be restricted in the peak period in the peak direction (i.e., restricted along northbound Woodward Avenue in the evening rush hour).

Deliveries along all roadways with LRT construction would be prohibited.

7.1.9 Other Impacts

This section of the report discusses other impacts with Alternative A1.

Signal Head Placement

North of Adams Street, signal head placement with the catenary wire would be the same as with the Preferred Alternative (Chapter 6.0, Section 6.10.1). In Downtown, all signalized intersections would require mast arm mountings, based on a City of Detroit ordinance.

Snow Removal

North of Adams Street, the removal of snow with Alternative A1 would be the same as the with Preferred Alternatives (Chapter 6.0, Section 6.10.2). In Downtown, most of the LRT alignment would be within a dedicated lane where the LRT would be capable of pushing the snow from the tracks. Snow removal from general-use lanes would not change from the existing condition. Snow from travel lanes should not be piled at LRT station locations due to ADA requirements, so some snow hauling may be necessary to keep these areas clear.

Long Term Construction Impacts to Woodward Avenue

Future rehabilitation or reconstruction of the Woodward Avenue Corridor after completion of the LRT construction must consider maintenance of both automobile and LRT traffic. While automobile traffic can be transitioned from lane to lane or detoured to other routes to accommodate construction activity, the LRT operates on a fixed rail guideway, and options to transition or detour LRT traffic are therefore limited. In general, for major reconstruction activities, it is proposed that part-width construction be utilized, with a minimum of one automobile travel lane in each direction on one side of the road, along with a single LRT rail guideway maintained. Two-way LRT traffic would be maintained on the single guideway through the use of strategically placed crossover rails and train signals installed during the initial construction. This operation would likely require prohibition of left turns along the Corridor due to limited space to provide left-turn storage. Depending on the nature of the construction activity, it may not be possible to maintain LRT traffic in one or both directions. In that case, operation of LRT in the peak direction only may be considered, with enhanced bus operations serving the off-peak direction. In some cases, use of buses may be required to serve LRT users should the LRT need to be taken out of service entirely due to construction activities.

7.1.10 Vehicle Storage and Maintenace Facility Sites

The proposed Vehicle Storage and Maintenance Facility (VSMF) would provide for indoor storage, inspection, repair and light maintenance of LRT equipment, as well as administrative offices. The square footage of the facility is anticipated to be between 75,000 and 110,000 square feet, depending on site size, configuration and facility design. Two sites were identified based on proximity to Woodward Avenue, size and configuration, zoning, land use, site ownership, potential utilities and traffic impacts:

- Amsterdam Street Site (4.6 acres) – would occupy two lots east and west of Cass Avenue between Amsterdam Street and the two grade-separated tracks owned by Consolidated Rail Corporation (CR) and Canadian National Railway (CN), respectively, just south of Baltimore Avenue. This site would have frontage on Woodward Avenue and is adjacent to the existing Amtrak Station.
- Highland Park Ford Plant Site (19.0 acres) – would occupy one large lot east of Woodward Avenue north of Manchester Street and the former Highland Park Ford Plant. As this site is about 900 feet east of Woodward Avenue, direct access would be via the right-of-way for CR's currently abandoned rail line.

A third site previously considered – MLK Boulevard site on two lots north and south of West Stimson Street, just west of Woodard Avenue and south of MLK/Mack Avenue – was eliminated from further consideration due to proximity of residential use that would be severely impacted by noise associated with a VSMF at the site.

Preliminary concept plans and discussion of access to the Amsterdam Street and Highland Park Ford Plant VSMF sites would be the same with Alternative A as with the Preferred Alternative (Chapter 6.0).

7.2 Alternative B2

Woodward Avenue Between Northbound I-75 Service Drive and Park Avenue/Witherell Street (~0.2 miles)

The existing ROW between the Northbound I-75 Service Drive and Park Avenue is described in Section 7.1. The alignment through this segment would be curb-running, with two 11-foot-wide general-use lanes in each direction, one 12.5-foot-wide shared/LRT lane in each direction, one exclusive left-turn lane, and one 10-foot-wide parking lane (Figure 7-14). The intersection of Woodward Street at Montcalm Street would become right-in/right-out-only due to the LRT station location between the Northbound I-75 Service Drive and Montcalm Street (Figure 7-15).

Figure 7-14. Curb-Running Shared-Use Cross-Section on Woodward Avenue between I-75 Service Drive and Park Avenue/Witherell Street

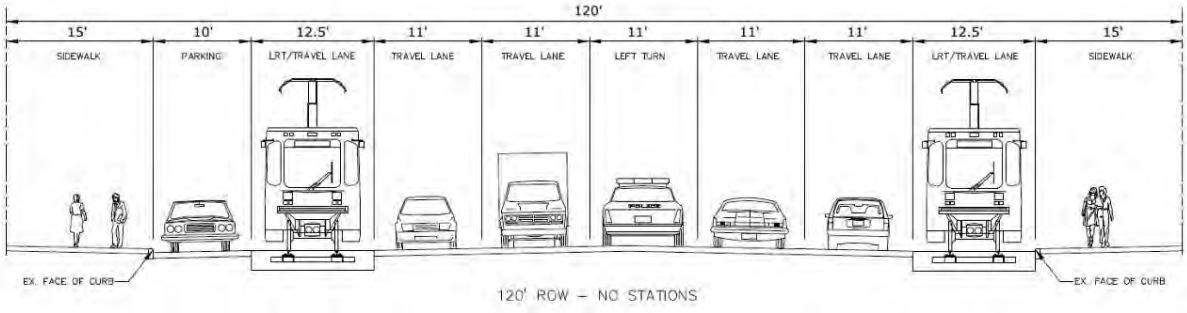

Source: URS Corporation, 2011

Figure 7-15. Curb-Running Shared-Use Cross-Section on Woodward Avenue between I-75 Service Drive and Park Avenue/Witherell Street with LRT Station

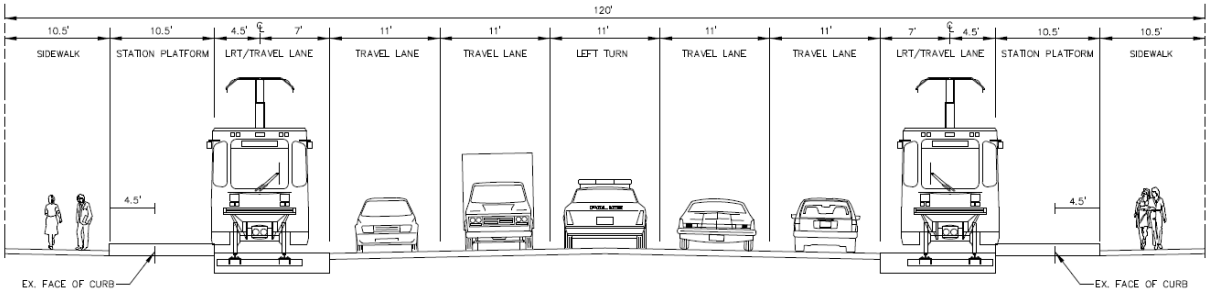

Source: URS Corporation, 2011

Woodward Avenue between Park Avenue/Witherell Street and State Street (~0.2 miles)

The existing ROW between Park Avenue and State Street is described in Section 7.1. The proposed cross-section would be the same as with Alternative A1 in this area (Figure 7-2). The

transition from curb-running to median-running would occur through the intersection of Woodward Avenue and Park Avenue/Witherell Street.

State Street between Woodward Avenue and Washington Boulevard (~0.2 miles)

The existing ROW on State Street between Woodward Avenue and Griswold Street is 60 feet with a curb-to-curb roadway width of 32 feet, and 14-foot-wide sidewalks on either side. There are three 10- to 11-foot-wide westbound lanes. Due to the roadway width, an exclusive LRT in both directions of travel would result in the closure of State Street to non-LRT vehicle traffic. For purposes of the traffic analysis, it was assumed that the LRT would travel in an exclusive lane eastbound and a shared LRT/vehicle lane westbound (Figure 7-16). Between Griswold Street and Washington Boulevard, the LRT would travel in a shared lane in both directions (not shown). All existing turning movements would be maintained.

Figure 7-16. Shared-Use Cross-Section on State Street between Woodward Avenue and Washington Boulevard

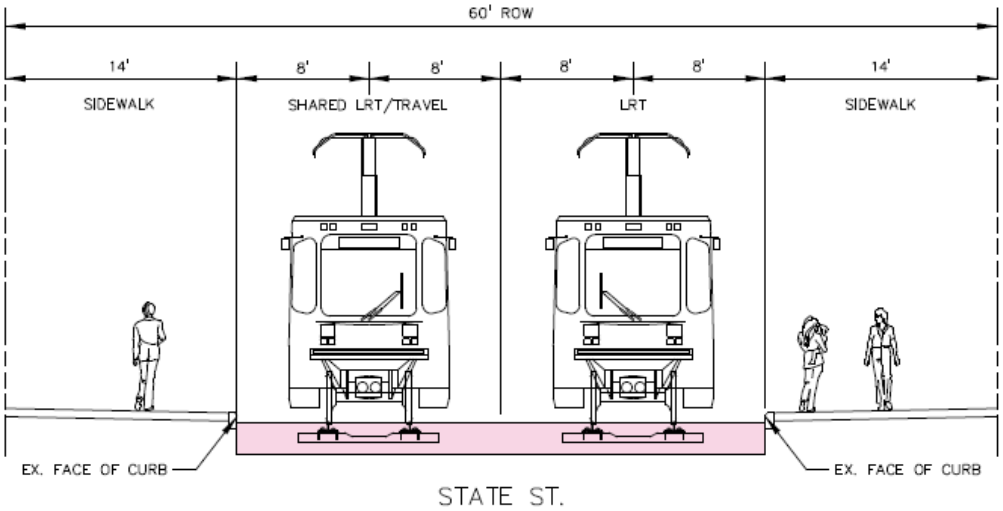

Source: URS Corporation, 2011

Washington Boulevard between State Street and Michigan Avenue (~0.1 miles)

The existing ROW on Washington Boulevard between State Street and Michigan Avenue is described in Section 7.1. The proposed cross-section would be the same as with Alternative A1 in this area (Figure 7-4).

Washington Boulevard between Michigan Avenue and Larned Street (~0.3 miles)

The existing ROW between on Washington Boulevard between Michigan Avenue and Larned Street is described in Section 7.1. The same changes that would be made to Alternative A1 in this section would be made to Alternative B2 (Figures 7-5 and 7-6).

Larned Street between Washington Boulevard and Randolph Street (~0.4 miles)

The existing ROW on Larned Street between Washington Boulevard and Randolph Street is described in Section 7.1. The proposed cross-section would be the same as with Alternative A1 in this area (Figures 7-7 and Figure 7-8).

Randolph Street (M-3) between Larned Street and Congress Street (~0.1 miles)

The existing ROW on Randolph Street between Larned Street and Congress Street is described in Section 7.1. The proposed LRT guideway and station would be constructed in the landscaped median. Therefore, the cross-sections and lane use of the northbound and southbound roadways would not change with introduction of the LRT and station.

Congress Street between Randolph Street (M-3) and Washington Boulevard (~0.4 miles)

The existing ROW on Congress Street between Randolph Street and Washington Boulevard is described in Section 7.1. The proposed cross-section would be the same as with Alternative A1 in this area (Figures 7-7 and 7-8).

Downtown Intersection Signal Changes

LRT-only phases are proposed at the following intersections, listed from north to south:

- Woodward Avenue and Elizabeth Street – due to southbound transition
- Woodward Avenue and Park Avenue/Witherell Street – due to transition
- Woodward Avenue and Clifford Street/John R Street – due to lack of turn lanes
- Woodward Avenue and State Street/Gratiot Avenue – due to turn
- Washington Boulevard and State Street – due to turn
- Washington Boulevard and Michigan Avenue – due to lack of turn lanes
- Larned Street/Congress Street and Shelby Street – due to lack of turn lanes
- Larned Street/Congress Street and Griswold Street – due to lack of turn lanes
- Larned Street/Congress Street and Woodward Avenue – due to lack of turn lanes and transition from north to south side on Congress Street
- Larned Street and Randolph Street (M-3) – due to turn
- Congress Street and Randolph Street (M-3) – due to turn
- Congress Street and Washington Boulevard – due to turn

Woodward Avenue Operating Option B

The following potential options for the typical roadway cross-sections from the Northbound I-75 Service Drive to Piquette Street for curb-running Alternatives B2 and B3 were considered:

- Seven-lane cross-section with parking on both sides of the street, with the curb moved out and the resultant sidewalk width reduced;
- Five lane cross-section with parking on both sides of the street, with removal of two travel lanes; and
- Seven-lane cross-section, with parking on one side of the street and the existing curb line maintained.

Additional modifications to the typical Woodward Avenue cross-section were discussed at meetings among the FTA, FHWA, MDOT and City of Detroit officials and representatives. The modifications considered included removal of the HOV designation in the LRT/high-occupancy-vehicle (HOV) lane, refinement of the northern transition from a curb-running alignment to a median-running alignment from north of Grand Boulevard to south of Piquette Street, and driveway closures at proposed LRT station locations.

All potential modifications were reviewed in the context of the roadway and railway design principles (Chapter 5.0) jointly defined by FHWA, MDOT and the City for their review of safety- and operations-related refinements of the Project alternatives. The first two alternatives are discussed in detail in Appendix O of this report. The seven-lane cross-section, with parking on one side of the street and the existing curb line maintained, was the approved cross-section for this operating option and is described below.

This cross-section consists of five 11-foot-wide general-use lanes and a 12.5-foot-wide LRT/shared-use lane on each side of the street (Figure 7-17). A 10-foot-wide parking lane would be provided on the west side of the street only. The amount of available parking on the east and west sides of Woodward Avenue were evaluated and it was determined that retaining parking on the west side would be the most beneficial. This cross-section would retain the existing curb line and sidewalk widths on both sides of the street. Because this cross-section would conform to all of the design principles, it was advanced for further analysis.

Figure 7-17. Seven-Lane Cross-Section with Parking on One Side of Street

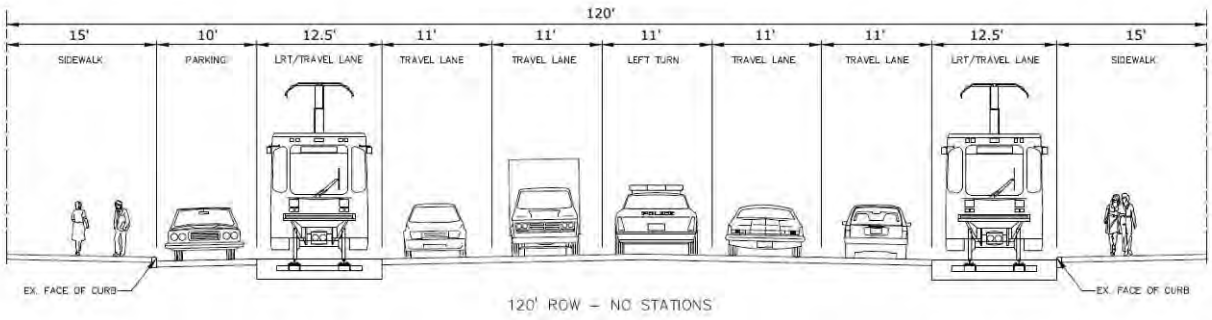

Source: URS Corporation, 2011

Additional details of the cross-section at LRT station locations and at the I-75 Fisher Freeway and I-94 Ford Freeway overpasses are described below.

Woodward Avenue LRT Station Locations

The cross-section at all of the proposed single-loading side-platform stations would comprise five 11-foot-wide general-use lanes (Figure 7-19). This would include two 11-foot-wide lanes in each direction and one continuous 11-foot-wide center left-turn lane. A 12.5-foot-wide LRT/shared-use lane would lie outside the other travel lanes in both north- and southbound directions. The parking lane would be removed on one side of the street to accommodate the LRT station platform. The centerline of the rail track would be shifted about 4.5 feet from what is shown in Figure 7-18, also to accommodate the station locations. The platforms would be 10.5 feet wide, requiring the removal of 4.5 feet of sidewalk width on each side of the street, leaving 10.5 feet of existing sidewalk width on one side and 15 feet of sidewalk width on the other side of the street. In locations along the LRT alignment where stations would be located on both sides of the street, sidewalks would be approximately 10.5 feet in width.

Figure 7-18. Seven-Lane Cross-Section with Parking on One Side at LRT Station

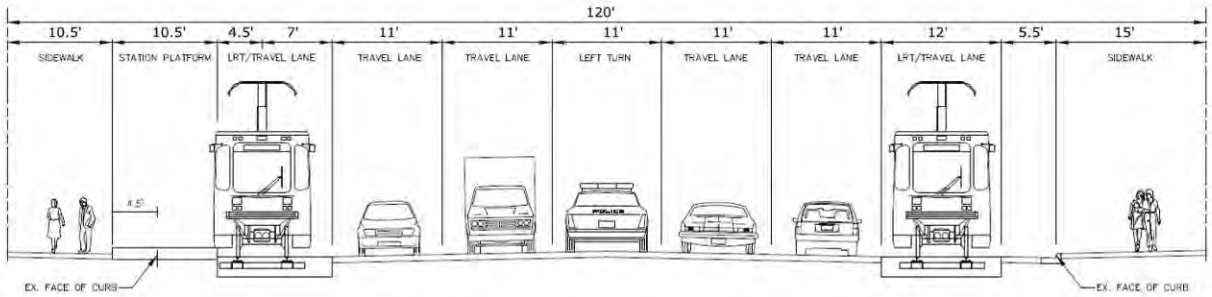

Source: URS Corporation, 2011

Woodward Avenue Overpass Bridges

The bridge overpasses, which carry Woodward Avenue over I-75 and I-94, have a 90-foot curb-to-curb width and 15-foot-wide sidewalks on each side. There would be no parking allowed on either overpass. As a result, there would be five 12-foot-wide vehicular travel lanes including a continuous center left-turn-only lane. On the outside of the vehicular travel lanes would be a 13-foot-wide LRT/auto lane in each direction. Finally, there would be a 2-foot-wide shy distance included between the LRT/vehicle lane and the 15-foot-wide existing sidewalk.

Woodward Avenue High-Occupancy Vehicle (HOV) Lane Designation

The LRT/shared-use lane with curb-running Operating Option B was also proposed to be a designated High-Occupancy Vehicle (HOV) lane. The HOV designation was to be for vehicles with two or more passengers, which would be allowed to drive in the lane with the LRT vehicles. However, there are two issues that make HOV designation in the LRT lane problematic. First, there is currently no State legislation in Michigan to enforce an HOV lane, so HOV designation alone would not control actual lane use. Secondly, all vehicles, regardless of their occupancy, would have to use the LRT/HOV lane to enter a right-turn-only lane in this section of the Corridor. Therefore, HOV designation in the LRT/shared-use lane was eliminated from further consideration.

Northern Transition of Operating Option B

Analysis of the railroad bridges located north of Piquette Street indicates that LRT vehicles would have to operate in the median under the bridges due to the bridges' spread footings and required vertical clearances. (See Chapter 6, Section 6.1.9 regarding vertical clearances required for LRT and other vehicles beneath the bridges.) The following consequences would result if the LRT were to operate in the curb-side lane beneath the bridges:

- LRT vehicles would need to operate separately from other vehicular traffic under the bridges due to the additional vertical clearance requirement;
- The required lowering of LRT guideway from the existing Woodward Avenue grade would directly impact the spread footings of the existing railroad bridges due to their shallow depth and would require, at a minimum, reconstruction of the bridge foundations, and possibly replacement of the bridges;
- Lowering the outside lanes for placement of the LRT track would require closing access to the side streets north and south of the bridges, including closing off Endicott and Baltimore avenues; and

- Transitioning from the exclusive LRT lane to the shared-use lane would likely cause some driver confusion, resulting in travel time delay and potentially additional accidents.

Given the above, it was determined that the transition from curb- to median-running LRT operation should occur south of the railroad bridges, rather than approximately 0.35 miles north of them, as initially conceived. Therefore, the transition from curb- to median-running would occur between Piquette Street and the I-94 Ford Freeway overpass. With the transition in this area, the curb-running LRT station at Piquette Street/Amtrak Station is unknown at this time. However, it is assumed there would be a median-running LRT station south of Piquette Street and the transition from curb- to median-running would occur south of the station.

Station Locations

There are six stations (11 station platforms) proposed with Operating Option B between I-75 and Piquette Street (all of which would be curb-side, except as noted). These stations would be located, south to north, as follows:

- Cobo Center: Larned at Washington and Congress at Washington
- Woodward: Larned at Woodward and Congress at Woodward
- Randolph Street
- Rosa Parks Transit Center
- State/Gratiot
- Adams/Grand Circus Park
- Foxtown/Stadium
- Temple Street
- MLK Boulevard/Mack Avenue
- Canfield Street
- Warren Avenue
- Ferry Street
- Piquette Street/Amtrak Station (median-running)

7.2.1 Transit Service, Safety, and Security

The refinement to bus transit with Alternative B2 would be the same as with the Preferred Alternative (Chapter 6.0).

Along Woodward Avenue, the curb-running LRT would operate at the speed of adjacent traffic up to the given roadway's posted speed limit. Within Downtown, the posted speed limit on all roadways is 25 mph south of Adams Street and 30 mph north of Adams Street; however, it is not expected that the LRT would exceed 15 mph due to short spacing between stations and curves. Alternative B2 would have a station within a five-minute walk of the Rosa Parks Transit Center and a station within a five-minute walk of a Detroit People Mover station. Safety and security measures at LRT stations and on LRT vehicles, and LRT safety educational campaigns, would be the same as with the Preferred Alternative (Chapter 6.0).

7.2.2 Non-Motorized Facilities and Safety

As discussed in Section 6.3 of this report, the new Complete Streets legislation requires MDOT to adopt a Complete Streets policy within two years (by August 1, 2012). Complete Streets is a concept that applies to roadway project planning, where consideration is given to all of the legal

users of roadway during the planning and design phases to determine if any relevant accommodations are necessary or appropriate within the Project. Woodward Avenue from Adams Street to State Fair Avenue is under MDOT's jurisdiction; therefore, the impacts to all users must be considered in the evaluation of this corridor in order to comply with this law.

North of the Piquette Street, impacts to the non-motorized environment with Alternative B2 would be the same as those identified with Preferred Alternative (Chapter 6.0).

Non-Motorized Facilities

Within Downtown, sidewalk margin widths for each section along the alignment are discussed in Section 7.2. Proposed sidewalk widths would all meet and, in most cases exceed, the 6-foot minimum (Chapter 5.0). In Downtown, the signal at Montcalm Street and Woodward Avenue would be changed to a pedestrian-only signal from a fully signalized intersection with the LRT. This is to provide access to the station platform north of Montcalm Street, which would become right-in/right-out-only for traffic. As discussed in Section 7.2, there are currently no designated bicycle lanes or bicycle routes in Downtown Detroit.

The number of signalized intersections between I-75 and Piquette Street would increase with Alternative B2. A traffic signal would be added at the intersection of Woodward Avenue at Amsterdam Street/Piquette Street to facilitate pedestrian traffic to and from the proposed median station at this location. Another traffic signal would be added along the Corridor where the LRT would transition from median-running to curb-running. Finally, a traffic signal would be added at Temple Street to accommodate pedestrians at the Temple Street station. Within the curb-running LRT alignment, all stations would be located along existing sidewalks near signalized intersections. The proposed station design is presented in Section 7.2. In addition, all crosswalks accessing LRT platforms would be at signalized intersections with appropriate pedestrian signal heads. There are no proposed mid-block or unsignalized crosswalks along the Corridor.

Alternative B2 does not include exclusive bicycle lanes in the Corridor. Preliminary evaluation of the Alternative B2 cross-sections between I-75 and Piquette Street found that the inclusion of bicycle lanes would not be feasible. In this section, the parking lane on one side of Woodward Avenue would be removed to accommodate the required 11-foot minimum width for vehicular travel lanes. While removing a vehicular travel lane would provide adequate room for a five-foot-wide bicycle lane, a minimum of two general-use lanes, per the agreed-upon design principles (Chapter 5.), would be provided along Woodward Avenue in each direction (see Appendix O for the five-lane cross-section). Additionally, a five-foot reduction in sidewalk width (enough to provide a single bike lane) would result in a sidewalk width that is less than the 10-foot minimum. Removing the parking lane on the other side would not provide enough width along the Corridor for a continuous bicycle lane due to the introduction of LRT stations. Therefore, there is no additional right-of-way space available to provide exclusive bicycle lanes without violating agreed-upon design standards and principles.

Within the curb-running alignment segment between Piquette Street and I-75, the proposed alignment consists of a parking lane on one side of the roadway only, an LRT/shared-use lane in each direction, and two general-use lanes in each direction, along with a continuous center left-turn lane (Figure 7-18). Per the *Michigan Vehicle Code* (2010), bicycles on Woodward Avenue would be required to ride either in the LRT/shared-use lane, or in an unoccupied parking lane

when available. Similar to the Preferred Alternative, bicycle access and storage at stations and bicycle storage on trains would be provided.

Non-Motorized Safety

Alternative B2 is not expected to have any impact on pedestrian safety in Downtown Detroit. As discussed in Section 7.1, lower vehicle speeds in Downtown would make it easier for cyclists to mix with vehicle traffic safely. Conflicts between the LRT vehicles may occur.

North of I-75, the curb-running LRT is not expected to have an impact on pedestrian safety at unsignalized intersections, as all stations would be located at signalized intersections. Unlike a median-running alignment, a curb-running alignment would not provide any refuge to pedestrians jaywalking across Woodward Avenue at midblock locations. Further, the number of signalized intersections between south of I-75 and Piquette Street is proposed to increase, thereby providing more opportunities for pedestrian crossings at controlled locations. However, the proposed parking lane between the curb-running LRT and the sidewalk could result in conflicts between the LRT vehicle and drivers/passengers exiting or entering parked vehicles.

Bicycles on Woodward Avenue would utilize either the LRT/shared-use lane or the unoccupied parking lane on one side when available. In the LRT/shared-use lane, an open groove adjacent to the rail would be present to provide space for the wheel flange of the LRT vehicles. If a bicycle were to cross the rail at a very small angle, there is potential for the front wheel to drop into the groove and cause the rider to lose balance. State-of-practice investigation indicated that bicyclists in areas with LRT tracks in the rightmost lane are more likely to fall and be injured.

Potential Mitigations or Design Improvements

While the Alternative B2 cross-section does not include bicycle lanes, there are a number of options available to better accommodate bicycle traffic along the Woodward Avenue Corridor.

Alternative Rail Design

A special type of girder rail could be considered for use on this Project, which has a smaller gap between the rail flange and the pavement. This rail design has the potential to reduce, but not eliminate, the danger of the flange gap for cyclists. However, this type of girder rail is not currently manufactured in the United States and may require a “Buy America” rule exception, which may not be feasible. While the potential may exist to special-order fabrication of the rail through a manufacturer in the United States, this option may be cost-prohibitive.

Education Program

An educational program to advise cyclists on how to properly cross the tracks could be implemented during the construction phase. This may include public service announcements, workshops with local bicycling groups, and warning signs along the Corridor.

Alternative Bicycle Routes

Development of alternative bicycle routes is discussed in Chapter 6.0. Given the potential hazard of the flange groove, the above-mentioned education campaign may include encouraging bicyclists to use other routes.

Shared Bicycle/Vehicle Lanes

An 11-foot-wide shared vehicle/bicycle lane with shared-lane marking in the right-most travel lane is a possible accommodation with the Preferred Alternative and Alternative A1. With

Alternative B2, the proposed 12.5-foot LRT/shared-use lane could be marked in the same manner, although the position of the shared-lane marking in the lane would need to be evaluated during the preliminary design phase of project development (see Chapter 6.0, Figure 6-10 for pavement marking).

7.2.3 Motor Vehicle Safety

Changes to motor vehicle safety along the Corridor north of Piquette Street would the same as with the Preferred Alternative (Chapter 6.0).

Between I-75 and Piquette Street, the LRT would be in the outermost lane of traffic with Alternative B2. There are no proposed changes to intersection operations, other than adding transit signal priority (TSP) at all intersections and transit-only phases at some intersections. As there would be no changes to vehicle-turning movements along roadways or at signalized intersections, no reduction in vehicle/vehicle crashes or vehicle/pedestrian crashes would be expected along the LRT alignment.

With LRT vehicles sharing the curb-side lane with motor vehicles, there is potential for conflicts between LRT vehicles and motor vehicles. Motorists in the LRT/auto lane may seek to quickly merge into the adjoining lane when an LRT vehicle approaches from behind, increasing the potential for side-swipe and rear-end crashes. Motorists traveling in the lane adjacent to the LRT/shared-use lane may instinctively swerve away from a passing LRT vehicle and into the adjoining lane, also increasing the potential for side-swipe crashes. There is also increased risk of rear-end and sideswipe crashes from motorists avoiding the LRT vehicle stopped at a station. An informational campaign may be needed to inform drivers of the potential interaction between LRT and other vehicles.

Compared with the portion of the Woodward Avenue Corridor north of I-75, there is likely to be more interaction between LRT vehicles and other vehicles in Downtown due to the narrower roadway widths and the likelihood that it would be necessary for the rail guideway to be level with the adjacent general-use lane. Separation between the rail guideway and the general-use lane may be confusing to motorists along these roadways, causing an increase in sideswipe crashes. Mitigation for this may include addition of colored pavement treatments for the rail guideway or of bollards between the LRT guideway and the general-use lane to let motorists know that the rail guideway is for the train only. Conflicts between LRT vehicles and other vehicles may also occur in locations where the LRT vehicle crosses other vehicle paths to make a turn. At these locations, an LRT-only phase is proposed to be added to the traffic signal.

7.2.4 Parking

Changes to existing parking along the Corridor north of the Grand Boulevard would be the same as with the Preferred Alternative (Chapter 6.0, Section 6.5). With Alternative B2, the number of parking spaces along Woodward Avenue south of Grand Boulevard and in Downtown would be impacted. Table 7-4 summarizes the existing and estimated number of parking spaces with Alternative B2. This is based on updated information on the alignments, which includes station areas, typical cross sections, and transition areas. The updated cross-section for Alternative B2 between I-75 and Piquette Street includes the removal of parking from the east side of the street along the entire alignment. An average approximate parking space length of twenty feet was used to determine the number of parking spaces; however, this may vary due to bus stop locations, fire hydrants, and driveway locations.

Table 7-4. Estimated Parking Spaces with Alternative B2

Section	Existing	Alternative B2	Net Change
Larned between Washington and Griswold	12	0	-12
Larned between Griswold and Randolph	0	0	0
Randolph between Congress and Larned	14	14	0
Congress between Randolph and Griswold	3	3	0
Congress between Griswold and Washington	17	0	-17
Washington between Michigan and Larned	2	0	-2
Washington between State and Michigan	15	15	0
Washington between Grand River and State	40	40	0
Grand River between Woodward and Washington	7	7	0
State between Woodward and Washington	0	0	0
Woodward between Larned Street and Campus Martius	3	3	0
Woodward between Campus Martius and State	6	6	0
Woodward between State and Grand River	8	0	-8
Woodward between Grand River and Adams	10	10	0
Woodward between Adams and I-75	0	0	0
Woodward between I-75 to Alexandrine	137	56	-81
Woodward between Alexandrine to Kirby	145	34	-111
Woodward between Kirby to Piquette	68	11	-57
Woodward between Piquette to Grand	46	0	-46
Woodward between Grand to Clairmount	126	0	-126
Woodward between Clairmount to McLean	187	0	-187
Woodward between McLean to Sears	81	29	-52
Woodward between Sears to McNichols	48	0	-48
Woodward between McNichols to 7 Mile	98	321	+223
Woodward between 7 Mile and 8 Mile	27	258	+231
Total	**1,100**	**807**	**-293**

Source: Parsons Brinckerhoff, 2011

There are currently more than 29,000 parking spaces available in public parking structures in Downtown Detroit (Figure 7-11). Current parking rates range from $1 per hour for metered on-street parking and up to $4 per hour within parking structures. According to the City of Detroit Municipal Parking Department, which operates six of these garages, the average weekday utilization of the garages ranges from 50 to 75 percent, varying by location of facility. Given these utilization rates, it is likely that these public parking structures, supplemented by on-street parking within one block of locations where parking spaces would be lost and other available surface parking lots would have adequate available parking within Downtown Detroit to offset parking space losses. The cost to park may increase over time due to the reduction of on-street parking availability within Downtown.

Many of the properties along the Woodward Avenue Corridor have available off-street parking either next to or behind buildings.

On the east side of Woodward Avenue, north of Willis Avenue, there are four businesses that currently have adjacent on-street parking; they would not have adjacent on-street parking on

Woodward Avenue with Alternative B2 and do not have access to an adjacent parking lot. Figure 7-12 illustrates the locations of these businesses. Their impacts and proposed mitigation are discussed in Section 7.1.

7.2.5 Freight Movement

Changes to freight movement along the Corridor north of the Northbound I-75 Service Drive would be the same as with the Preferred Alternative (Chapter 6.0).

Trucking and Deliveries

Existing trucking and delivery activities within Downtown Detroit are discussed in Section 7.1.5.

Deliveries along the roadways with the exclusive LRT rail guideway and only one general-use lane in each direction would be prohibited. Deliveries along roadways with two general-use lanes would be restricted during peak traffic times (7 to 9 a.m. and 3 to 6 p.m.). Deliveries along roadways that have an outside LRT/shared-use lane on both sides of the roadway would be prohibited (Table 7-5).

It is not anticipated that there would be any restrictions for deliveries along Randolph Street. Deliveries would be restricted at locations where there are LRT station locations. Table 7-5 summarizes the expected delivery restrictions by roadway segment with Alternative B2.

Table 7-5. Delivery Restrictions

Section	Alternative B2
Larned between Washington and Griswold	Morning/Evening
Larned between Griswold and Randolph	Morning/Evening
Randolph between Congress and Larned	
Congress between Randolph and Griswold	Morning/Evening
Congress between Griswold and Washington	Morning/Evening
Washington between Michigan and Larned	All-Day
Washington between State and Michigan	Morning/Evening
State between Woodward and Washington	All-Day
Woodward between State and Grand River	All-Day
Woodward between Grand River and Adams	All-Day
Woodward between Adams and I-75	Morning/Evening

Source: Parsons Brinckerhoff, 2011

Between I-75 and Piquette Street, all existing turning movements would be allowed with Alternative B2, and there would be no limitation on u-turns for heavy vehicles, though they would not be allowed at intersections nor encouraged mid-block.

A turning analysis was conducted of right-turning trucks to determine any impact to truck movements due to the proposed cross-section of Woodward Avenue. The analysis was conducted using a design vehicle with a wheel base of 50-feet (WB-50). This analysis was conducted at the MLK Jr. Boulevard/Mack Avenue and Canfield Street intersections (Appendix P).

These two streets were considered representative of other intersecting streets along the Woodward Avenue Corridor, with MLK Jr. Boulevard/Mack Avenue representing a typical major cross-street and Canfield Street representing a typical minor cross-street. At MLK Jr.

Boulevard/Mack Avenue, it was found that trucks would have no difficulty turning from Woodward Avenue to the intersecting street. For trucks turning onto Woodward Avenue from MLK Jr./Mack Avenue, the vehicle would need to swing out slightly from the right lane and encroach into the adjacent lane in order to complete the right-turn onto Woodward Avenue. However, this maneuver is currently necessary and would not represent a change from the existing condition.

At Canfield Street, the analysis found that trucks would have no difficulty turning from the cross-street onto Woodward Avenue, as long vehicles would turn from the left-most part of the lane. For trucks turning from Woodward Avenue onto Canfield Street, they would need to swing out across multiple lanes and encroach into the center left-turn lane in order to complete the maneuver, making this movement impractical. However, this maneuver is currently necessary and would not represent a change from the existing condition. Recent turning-movement counts indicate that there is, at most, one truck turning onto or off Canfield Street during the morning and afternoon peak hours.

Deliveries would continue to be allowed along Woodward Avenue where on-street parking is allowed. As the Alternative B2 cross-section proposes the removal of parking on the east side of Woodward Avenue, deliveries along that side of Woodward Avenue would not be allowed. In addition, deliveries along the west side would be restricted to locations where there is available on-street parking. Given the removal of approximately 70 percent of the on-street parking on Woodward Avenue, there may be a negative impact to some businesses that receive their deliveries on Woodward Avenue. These would be the same businesses that would be impacted with Alternative A1 (Section 7.1).

Freight Railroads

The impacts to the existing railroad bridges located north of Piquette Street are unknown at this time. However, use of the median-running alternative under the railroad bridges would minimize or eliminate any impact to the railroad bridges or to freight traffic. Until additional survey information is obtained regarding the foundations of the railroad bridges, the potential for or extent of impact cannot be determined definitively.

Potential Mitigation

Due to the large number of parking spacing proposed to be removed with Alternative B2, thereby impacting on-street deliveries, mitigation would be required at those locations where on-street delivery on Woodward Avenue is the only option currently available. Mitigation measures may include allowing off-peak or night-time deliveries and back alley improvements for impacted locations.

7.2.6 Emergency Vehicles

Impacts to emergency vehicles along the Corridor north Piquette Street would be the same as with the Preferred Alternative (Chapter 6.0).

In Downtown, there is one fire station (Engine 1) located at 111 Montcalm Street, west of Park Avenue. This fire station is approximately one block from Woodward Avenue. With Alternative B2, there would be signals at the intersections of Woodward Avenue with Northbound I-75 Service Drive and at Park Avenue/Witherell Street. Given the proximity of the signals on either side of the fire station along Woodward Avenue, it is not expected that response times would increase.

According to the (DFD, fire trucks need a minimum of 13 feet and six inches of vertical clearance and require a 38-foot turning radius to complete a u-turn. With Alternative B2, fire trucks would be able to complete a u-turn mid-block from the left-most general-use lane on Woodward Avenue. Many of the roadways in Downtown are currently not wide enough to accommodate a fire truck making a u-turn. Alternative B2 would not reduce the number of locations where in-street u-turns for a fire truck are possible. In addition, no roadways are proposed to become transit-only with Alternative B2. It will be determined during the design phase of project development whether there a barrier separating the LRT from other vehicle traffic would be provided.

Additionally, the DFD indicated that fire trucks must be situated approximately 20 feet from a building face to raise the ladder to access windows on the building face. Given a typical sidewalk width of 15 feet in Downtown and a typical sidewalk width of 10 to 15 feet between I-75 and Piquette Street, a fire truck would need to either occupy a portion or all of the LRT/shared-use lane to respond to an incident. In this instance, the catenary wire for the LRT would need to be disabled. This would result in an impact to LRT operations during any kind of fire event that requires use of a ladder truck along the alignment in Downtown or along Woodward Avenue.

7.2.7 Traffic Operations

Much like the Preferred Alternative, Alternative B2 would generally include removal of a lane in each direction of travel along Woodward Avenue between Piquette Street and State Fair Avenue to accommodate the median-running LRT operation (Chapter 6.0, Section 6.8). The configuration of roadways with the LRT in Downtown, including any changes from existing conditions with Alternative B2 are described in Section 7.2. Proposed intersection operations with the LRT, the use of TSP, and traffic operations are discussed below.

Methodology

Traffic volumes and signalization changes north of Piquette Street with Alternative B2 would be the same as with the Preferred Alternative (Chapter 6.0, Section 6.8). Traffic volumes used to evaluate Alternative B2 between I-75 and Piquette Street are based on the 2030 No Build traffic volumes (Appendix C and Appendix Q of this report, respectively). It was assumed that no vehicles would divert to other roadways and travelers would not switch modes due to the proposed LRT. This conservative assumption represents a worst-case scenario, as Downtown roadways generally have surplus capacity and could accommodate additional diverted trips (Chapter 4.0, Figure 4-1).

Transit Signal Priority (TSP)

TSP along Woodward Avenue north of Downtown would be the same as with the Preferred Alternative (Chapter 6.0, Section 6.8), and is also proposed at signalized intersections throughout Downtown with all Project alternatives. The same assumptions and methodology that were used for the Preferred Alternative were used for all Project alternatives (Chapter 6.0, Section 6.8.1). LRT-only phases were added at various locations, as described in Section 7.2.

Traffic Conditions

The morning and evening peak-hour operational results (level of service and delay) from the VISSIM models for all the signalized intersections with Alternative B2 south of Piquette Street

are summarized in Appendix R. The results are the average of five runs using different random number seeds.

Signal operations assumed with Alternative B2 would remain essentially the same as in current operations but with the addition of TSP, as described. The modeled signal timings were updated with a cycle length of 120 seconds and revised splits and offsets. Minimum pedestrian timings were maintained for all signalized intersections. The morning and evening peak-hour operational results from the VISSIM models for each of the signalized intersections along the Woodward Avenue Corridor with Alternative B2 are included in Appendix R of this report.

All intersections would operate with an overall LOS D or better during the morning and evening peak hours with Alternative B2. While the overall intersections would operate at an acceptable LOS overall, a number of individual approaches would operate at LOS E during the morning or evening peak hours. These approaches are:

- Westbound Gerald Street – morning peak hour
- Eastbound Buena Vista Street – morning and evening peak hours
- Eastbound Tuxedo Street – morning peak hour
- Eastbound/Westbound Chicago Street/Arden Park Blvd – evening peak hour
- Westbound Holbrook Street – morning peak hour
- Eastbound Putnam Street – evening peak hour

The westbound Buena Vista Street approach to Woodward Avenue would operate at LOS F in the morning peak hour. In the future morning peak hour, there is expected to be 13 vehicles using this approach. A LOS F for this approach is the result of the addition of side-street detection and the low volume of vehicles arriving at the signal. With the proposed cycle length of 120 seconds at this intersection and the low volume, vehicles may need to wait for more than 80 seconds for the green signal, which is the criteria for LOS F. Typically, mitigation is not applied for signalized approaches that have such low traffic volumes.

Table 7-6 summarizes the anticipated time for a vehicle to travel along Woodward Avenue between State Fair Avenue and the northbound I-75 Service Drive southbound in the morning peak hour and northbound in the evening peak hour.

Table 7-6. Vehicle Travel Time along Woodward Avenue with Alternative B2

Section		Travel Time	
		Southbound in Morning Peak Hour	Northbound in Evening Peak Hour
I-75	MLK Jr. /Mack	2 min 26 sec	3 min 6 sec
MLK Jr. /Mack	Warren	2 min 24 sec	2 min 35 sec
Warren	Antoinette	2 min 41 sec	3 min 12 sec
Antoinette	Glendale	6 min 54 sec	7 min 28 sec
Glendale	McNichols	3 min 28 sec	4 min 57 sec
McNichols	State Fair	3 min 12 sec	3 min 48 sec
Total		**21 min 5 sec**	**25 min 6 sec**
Average Speed		**22.8 mph**	**19.1 mph**

Source: Parsons Brinckerhoff, 2011

It would take approximately 21 minutes for a vehicle to travel along southbound Woodward Avenue during the morning peak hour from State Fair Avenue to the Northbound I-75 Service Drive. Northbound during the evening peak hour, it would take approximately 25 minutes to travel from the Northbound I-75 Service Drive to State Fair Avenue. Comparing this to the 2030 No Build condition, it would take approximately six to nine minutes longer for a vehicle to travel these sections.

7.2.8 Construction Impacts

Construction-related impacts along the Woodward Avenue Corridor north of Piquette Street would be the same as with the Preferred Alternative (Chapter 6.0, Section 6.9).

Transit Service

Within Downtown, construction of an LRT system would cause some roadways to be either closed or have reduced laneage. As a result, transit service along any closed roadway would need to be rerouted to a nearby roadway. Existing traffic patterns would be affected during construction, which would result in longer travel times and may result in temporary detours for some bus routes.

Between I-75 and Piquette Street, the majority of construction activity would occur in the outside traffic lane and the existing parking lane with Alternative B2. This would interfere with the ability of buses to pull into existing stops and may result in an accessibility issue for some users. In addition, existing traffic patterns would be affected during construction, which could result in longer travel times and temporary detours for some bus routes. Construction of LRT platforms adjacent to the existing sidewalks may necessitate shifts in bus stop locations.

In areas where construction would prevent buses from pulling into existing stops, bus stops would be relocated outside the immediate construction zone and a clear accessible path from the sidewalk through the construction zone would be maintained. Where temporary detours or stop

relocations are necessary, DDOT would issue a Rider Alert, which would be posted at affected stops, on buses, at schedule distribution outlets and on the DDOT website.

Motor Vehicle and Non-Motorized

Existing traffic patterns would be affected during construction, which could result in longer travel times for motor vehicles and may require some temporary detours.

With construction of curb-running stations within Downtown and along Woodward Avenue south of Piquette Street, construction fencing would be placed between the construction zone and the adjoining sidewalk. At curbside LRT stops under construction, a through path would be maintained along the sidewalk behind the construction zone. Cyclists would continue to ride in the rightmost traffic lane. Construction would likely result in reduced vehicle travel speeds, allowing cyclists to mix with vehicle traffic more safely.

Parking

Construction of the LRT along the Corridor would be completed in two phases. Phase 1 would entail construction of the southern section between Downtown and Grand Boulevard. Phase 2 would entail construction of the northern segment of the Woodward Avenue LRT Project, from Grand Boulevard to the Michigan State Fairgrounds. During Phase 1, construction of the LRT within Downtown Detroit would cause the loss of all parking during any construction staging. This is due to the narrower roadway widths and the possibility of even some roadway closures during construction. Access to businesses would be maintained during all phases and stages of construction.

Construction of the LRT between Adams Street and Grand Boulevard during Phase 1 would entail closing half of Woodward Avenue during a construction stage. One travel lane along Woodward Avenue would be maintained in each direction and left-turn lanes would be maintained at signalized intersections. Left-turn access at unsignalized intersections may not be maintained. On-street parking may be feasible between signalized intersections on only the side of the roadway where traffic is maintained. On-street parking on the other side would not be maintained.

Between Grand Boulevard and McNichols Road, Phase 2 construction of the LRT would entail closing half of Woodward Avenue during a construction stage. One travel lane along Woodward Avenue would be maintained in each direction. Left-turn lanes may not be provided and left-turns along Woodward Avenue could be restricted. Parking would be removed during construction in this section.

North of McNichols Road, Phase 2 construction may entail closing the inner-most lanes of Woodward Avenue for the construction of the LRT guideway. Crossovers would be closed during construction, causing vehicles to travel to the next crossover to turn around. Parking along Woodward Avenue could be maintained but may be restricted in the peak period in the peak direction (i.e., restricted along northbound Woodward Avenue in the evening rush hour).

Deliveries along all roadways with construction would be prohibited.

7.2.9 Other Impacts

This section of the report discusses other impacts with Alternative B2.

Driveway Impacts at Station Locations on Woodward Avenue

Eleven driveways would be removed north the Northbound I-75 Service Drive to accommodate the proposed LRT stations. In some locations, the existing driveways lead to vacant parcels; in others, the driveways lead to active businesses, in some cases providing the businesses' only access to Woodward Avenue. The driveway and access impacts, due to LRT station locations, and potential refinement of station locations to reduce the impacts are discussed below.

Southbound Foxtown/Stadium Station

One driveway would be removed for this station location. However, the existing driveway leads directly to a fence, behind which is a restaurant patio. While this driveway does not currently serve a business and, therefore, its removal would not impact a business, the active permit for the driveway would need to be rescinded. It is not expected that this LRT station would need to be relocated due to this driveway.

Southbound Temple Street Station

One driveway, which leads to a vacant parcel, would be removed. However, additional driveways located off Temple and Sproat Streets also provide access to this parcel. Therefore, it is not expected that this LRT station would need to be relocated due to the driveway.

Figure 7-19. Driveway to Ellington Building

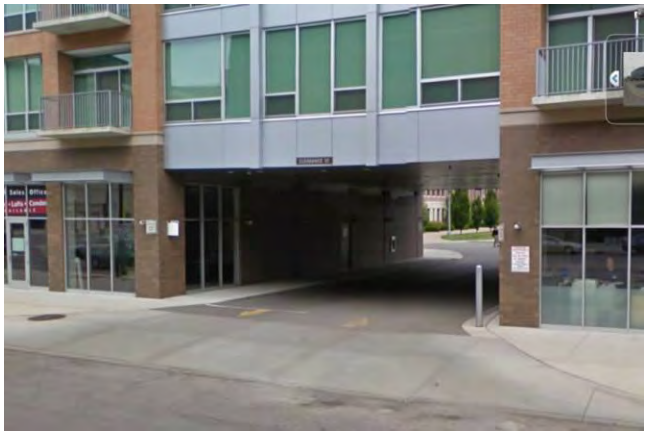

Source: Google Earth, 2011

Northbound Temple Street Station

Two driveways, which lead to a single vacant parcel, would be removed. There is no other street access to the parcel although there is access via an unpaved back alley. With the proposed LRT station location, there are two options for providing a new driveway to this parcel: either north of the station where the parcel has frontage on Woodward Avenue or off adjacent Alfred Street. As there are options for providing access to the parcel, it is not expected that this LRT station would need to be relocated.

Northbound MLK Jr. Blvd/Mack Avenue Station

One driveway, located at the newly constructed Ellington Building north of Mack Avenue, would be removed by the current sitting of this LRT station.

An additional driveway to access the parking lot behind the Ellington Building is available off Mack Avenue. As this second driveway is incorporated into the design of the newly constructed building (Figure 7-19), it may be necesssary to relocate the LRT station instead of removing the driveway. Moving the station site south of Mack Avenue would require removal of a driveway to a vacant building; moving it to the north would require removal of a driveway that currently does not serve the business. This driveway impact could be mitigated by moving the LRT station approximately 425 feet to the north.

Southbound Canfield Street Station

This LRT station would affect two driveways (Figure 7-20). The first is at The Whitney and the second is a one-way outbound driveway for the newly constructed Studio One Apartments. The Whitney has a second driveway located off Canfield Street; the Studio One Apartment Complex has a second driveway located off Woodward Avenue.

Figure 7-20. Southbound Canfield Street Station Driveway

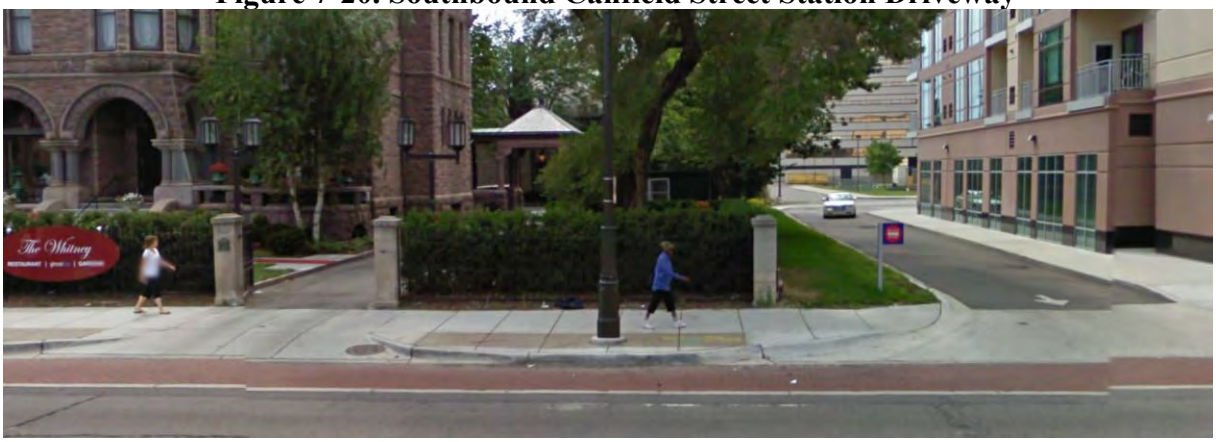

Source: Google Earth, 2011

It may be appropriate to relocate this LRT station due to its impact on these active driveways, as well as the historic designation of The Whitney. However, moving the station site one block to the south is infeasible as it would affect driveways to other active businesses. While it may be possible to move the station to the north, the LRT station would be between two other driveways, allowing a LRT platform length of only about 180 feet, rather than the 200 feet, which is preferred.

Northbound Canfield Street Station

One driveway would be removed for this LRT station location. As this driveway leads to a paved parking lot, which also has access off Canfield Street, it is not expected that this station would need to be relocated due to the driveway.

Southbound Ferry Avenue Station

Figure 7-21. Southbound Ferry Avenue

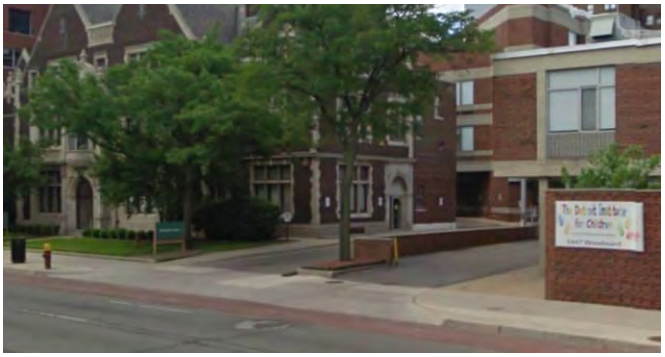

Source: Google Earth, 2011

Two driveways would be removed for this LRT station location (Figure 7-21). One leads to a Wayne State University (WSU) building that has access only off Woodward Avenue. The second driveway, off Woodward Avenue and directly adjacent to the WSU driveway, is the only driveway for a day care center. While the daycare center parking lot shares access to another parking lot that has access off Ferry Avenue, the parking lot is on a separate parcel from the day care center. The LRT station cannot be moved to the south as it would be too close to the signalized intersection of Woodward Avenue at Kirby Street. The station could be moved one block to the north, requiring removal of two driveways to a parking lot; however, that

parking lot also has a one-way driveway off Palmer Avenue, which could be expanded to accommodate two-way traffic.

Northbound Ferry Avenue Station

One driveway would be removed for this LRT station location. The driveway is to a gas station located south of Palmer Avenue, which has two additional driveways, one located off Woodward Avenue and the other off Palmer Avenue. However, review of aerial mapping indicates that access to the gas station tanks may need to be via the driveway proposed to be removed. Moving the LRT station one block to the south would block the only driveway to a four-story parking garage. Moving the LRT station to the north appears to be the best option, as it would block one of two driveways to a party supplies store but leave the second driveway useable.

Summary of Driveway Impacts

With the currently proposed LRT station locations, 11 driveways would need to be removed. The analysis of driveway impacts indicates that six of those driveways are to active businesses. Moving some of the LRT station locations one or two blocks would mitigate impacts to those six driveways and the properties they serve. However, nine driveways would still need to be removed, but with less impact to active properties. Based on the analyses discussed above, the currently proposed LRT station locations were not modified, with the understanding that station locations may be moved in future design phases of project development.

Signal Design

This section provides a generalization of how the overhead catenary wire for the curb-running LRT between I-75 and Piquette Street and signal heads at signalized intersections would coexist. Chapter 6.0, Section 6.10.1 outlines MDOT's typical clearance heights and distances. Within Downtown, all signalized intersections require mast arm mountings based on a City of Detroit ordinance.

The placement of signal heads and their supporting mechanism would be constrained based on the location of and the required minimum offset from the catenary wire. The minimum height of the catenary wire is 17 feet for an alignment where LRT is running in mixed traffic. In addition, an offset of six feet is required between the catenary wire and any other object. Given these requirements, a signal head mounted above the catenary would be required to have a minimum mounting height of 23 feet.

There are two options for signal head mounting: mast arms or span wires. Under a curb-running LRT scenario, either of these options would require crossing over the catenary wires in order to secure the mast arm or span wire at the corner of the intersection outside of the traveled roadway. Under a median-running scenario, mast-arm placement could be provided which stops short of the LRT alignment and would not require crossing over the catenary wires.

Under a mast arm option, signal heads would be required to be set at a minimum of a 23-foot bottom height in order to achieve the minimum clearance from the catenary wires. In addition, given the three-degree rise of the arm, signal head placement would get progressively higher farther into the roadway. This is far in excess of MDOT's preferred bottom height of 21 feet. Therefore, mast-arm signal design is not feasible with Alternative B2 unless MDOT grants an exception to its typical signal design criteria, and after confirmation that required signal head visibility could be met at the higher mounting height.

Clearance requirements for a span wire signal design with a curb-running LRT scenario are essentially the same as those identified for the median-running LRT. However, signal heads mounted to the span wire can be mounted lower than the wire elevation using a stand-off pole, thereby enabling a lower signal head mounting height outside of the area of the catenary wire. As discussed in Chapter 6.0, maintaining clearances and signal head visibility for drivers is not anticipated to be an issue using span-wire signal design. Therefore, at this point, the recommended signal design for Alternative B2 is span wire.

Snow Removal

The LRT vehicles would be capable of running in snow, as they will push snow from the tracks. In heavy snow conditions, the trains may need to run at a higher frequency to keep the tracks clear or may need to run overnight. The process to remove snow from vehicle travel lanes would not change from existing conditions. The LRT/shared-use lane would need to be plowed in order to accommodate motor vehicles. Snow from travel lanes should not be piled at station locations due to ADA requirements, so some snow hauling may be necessary to keep these areas clear.

Long-Term Construction Impacts to Woodward Avenue

Future rehabilitation or reconstruction of the Woodward Avenue Corridor after completion of the LRT construction must consider maintenance of both automobile and LRT traffic. While automobile traffic can be transitioned from lane to lane or detoured to other routes to accommodate construction activity, the LRT operates on a fixed rail guideway, and options to transition or detour LRT traffic are therefore limited. In general for major reconstruction activities, it is proposed that part-width construction be utilized, with a minimum of one automobile travel lane in each direction on one side of the road, along with a single LRT rail guideway maintained. Two-way LRT traffic would be maintained on the single guideway through the use of strategically placed crossover rails and train signals installed during the initial construction. This operation would likely require prohibition of left turns along the Corridor due to limited space to provide left-turn storage. Depending on the nature of the construction activity, it may not be possible to maintain LRT traffic in one or both directions. In that case, operation of LRT in the peak direction only may be considered, with enhanced bus operations serving the off-peak direction. In some cases, use of buses may be required to serve LRT users should the LRT need to be taken out of service entirely due to construction activities.

7.2.10 Vehicle Storage and Maintenace Facility Sites

VSMF sites considered for Alternative B2 are the same as considered for Alternative A1.

7.3 Alternative B3

The following section describes Alternative B3 within Downtown Detroit. The alternative would be curb-running from I-75 to Piquette Street and median-running from Piquette Street to the Michigan State Fairgrounds. North of I-75 it is identical to Alternative B2 (Section 7.2).

Woodward Avenue between the Northbound I-75 Service Drive and Campus Martius Park (~0.6 miles)

The existing ROW on Woodward Avenue between the Northbound I-75 Service Drive and Campus Martius Park is described in Section 7.1. The proposed cross-section for Downtown Design Option 3 north of Park Avenue is shown in Figure 7-15 and Figure 7-16 with and without stations, respectively. South of Park Avenue, Woodward Avenue would include two 13-foot-wide curb-running shared LRT lanes and two 11-foot-wide general-use lanes (Figure 7-22). The

sidewalk on one side of the roadway may need to be narrowed by up to nine feet at station locations (Figure 7-23).

Figure 7-22. Curb-Running Shared-Use Cross-Section on Woodward Avenue between Park Avenue/Witherell Street and Campus Martius Park

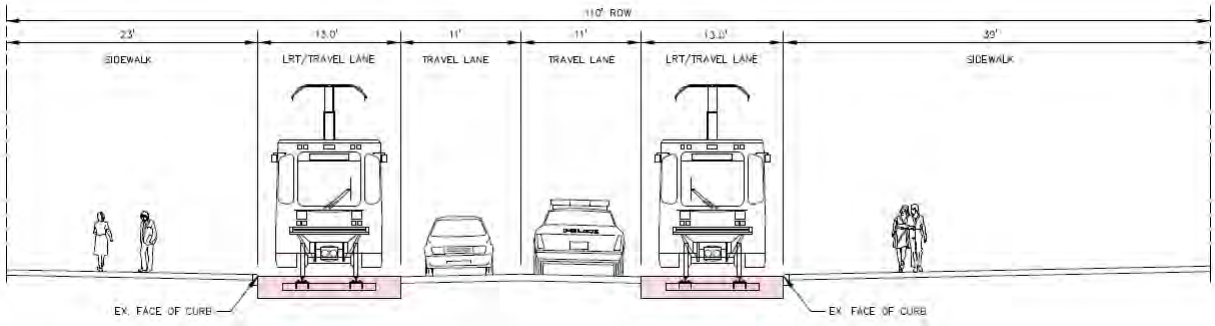

Source: URS Corporation, 2011

Figure 7-23. Curb-Running Shared-Use Cross-Section on Woodward Avenue between Grand River Avenue and Campus Martius Park with Station

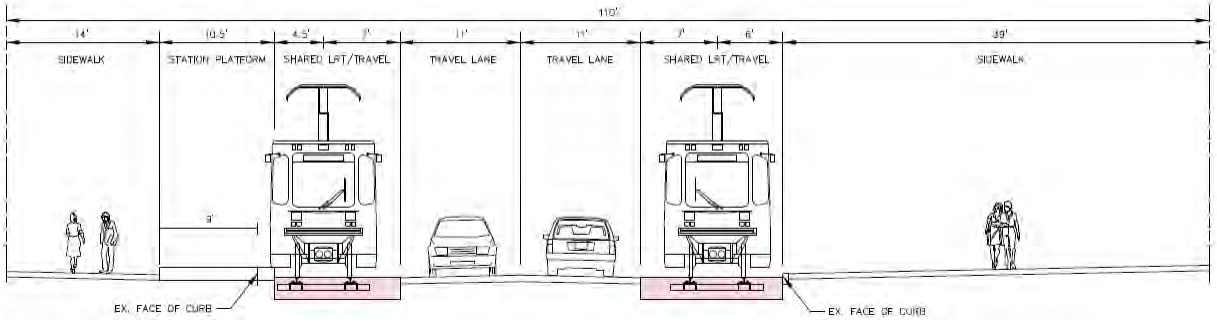

Source: URS Corporation, 2011

Woodward Avenue around Campus Martius Park to Larned Street

Existing roadway width around Campus Martius Park varies greatly. Laneage generally consists of two to three travel lanes around the traffic circle, with right-turn-only lanes onto Woodward Avenue and other intersection streets. The LRT would travel in a shared lane counter-clockwise around Campus Martius in the same direction as vehicular traffic, and then continue south on Woodward Avenue to a station in the median on Woodward Avenue between Congress and Larned streets. It would then reverse direction to travel north on Woodward Avenue, counter-clockwise around Campus Martius in the same direction as vehicular traffic and then continue north (Figures 7-24 and 7-25).

Figure 7-24. Exclusive LRT Planview on Woodward Avneue through Campus Martius Park

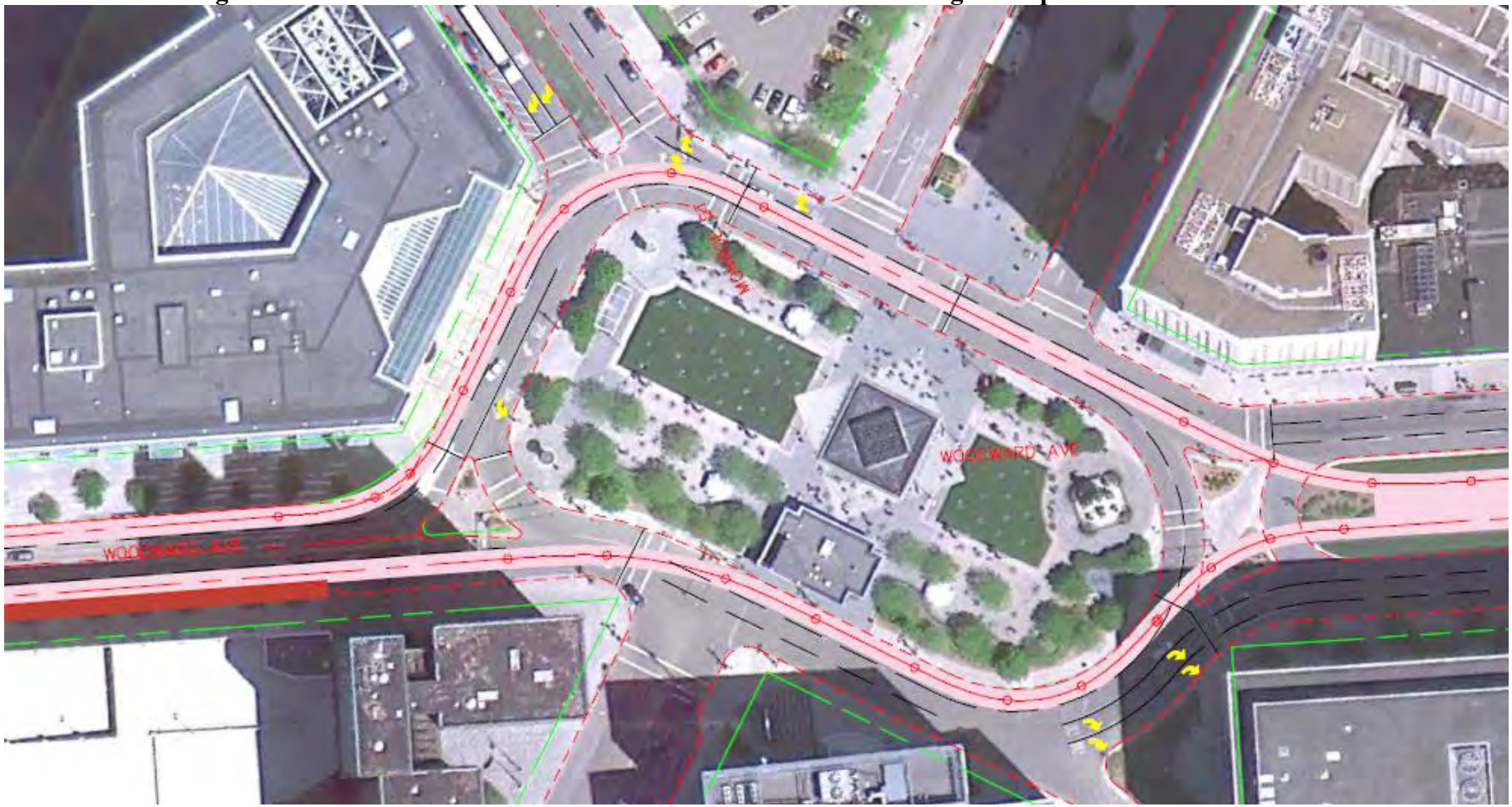

Source: URS Corporation, 2011

Figure 7-25. Median-Running Exclusive Cross-Section on Woodward Avenue between Campus Martius Park and Larned Street

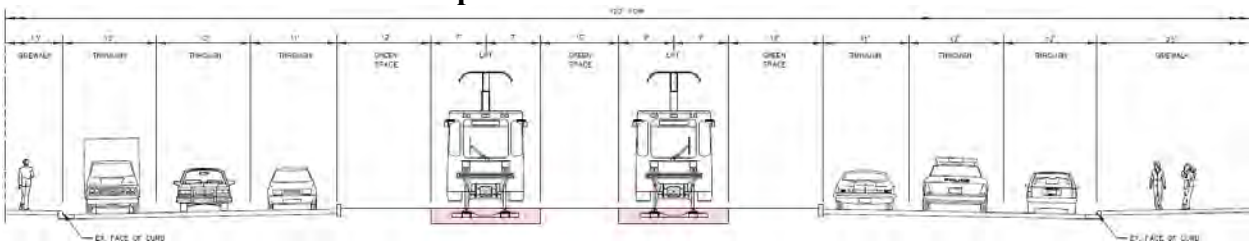

Source: URS Corporation, 2011

Downtown Intersection Signal Changes

The addition of LRT-only phases are proposed at the following intersections:

- Woodward Avenue and Elizabeth Street – due to southbound transition
- Woodward Avenue and North Campus Martius – due to lane transition
- Woodward Avenue and South Campus Martius – due to lane transition
- Woodward Avenue and Congress Street – due to lane transition

Station Locations

- Woodward: Larned at Woodward
- Michigan Avenue
- Adams/Grand Circus Park (GCP)
- Foxtown/Stadium
- Temple Street
- MLK Blvd/Mack Avenue
- Canfield Street
- Warren Avenue
- Ferry Street
- Piquette Street/Amtrak Station
- Grand Boulevard
- Hazelwood Street/Holbrook Street
- Calvert Street
- Glendale Street
- Manchester Street
- McNichols Road
- 7 Mile Road
- State Fair

7.3.1 Transit Service, Safety, and Security

The refinement to bus transit with Alternative B3 would be the same as with the Preferred Alternative (Chapter 6).

Along Woodward Avenue, the curb-running LRT would operate at the speed of adjacent traffic up to the given roadway's posted speed limit. Within Downtown Detroit, the posted speed limit on all roadways is 25 mph south of Adams Street and 30 mph north of Adams Street; however, it is not expected that the LRT would exceed 15 mph due to short spacing between stations and

curves. Alternative B3 would have a station within a five-minute walk to a Detroit People Mover station. Safety and security measures at LRT stations and on LRT vehicles, and LRT safety educational campaigns, would be the same as with the Preferred Alternative (Chapter 6.0).

7.3.2 Non-Motorized Facilities and Safety

The new Complete Streets legislation requires MDOT to adopt a Complete Streets policy within two years (by August 1, 2012). Complete Streets is a concept that applies to roadway project planning, where consideration is given to all of the legal users of roadway during the planning and design phases to determine if any relevant accommodations are necessary or appropriate within the Project. Woodward Avenue from Adams Street to State Fair Avenue is under MDOT's jurisdiction; therefore, the impacts to all users must be considered in the evaluation of this corridor in order to comply with this law.

North of the Piquette Street, impacts to the non-motorized environment with Alternative B3 would be the same as those identified with the Preferred Alternative (Chapter 6.0).

Non-Motorized Facilities

Within Downtown, sidewalk margin widths for each section along the alignment are discussed in Section 7.3. Proposed sidewalk widths would all meet and, in most cases exceed, the six-foot minimum (Chapter 5.0). Within Downtown, the signal at Montcalm Street and Woodward Avenue would be changed to a pedestrian-only signal from a fully signalized intersection with the LRT. This is to provide access to the station platform north of Montcalm Street, which is proposed to become right-in/right-out-only for traffic. There are currently no designated bicycle lanes or bicycle routes within Downtown Detroit.

The number of signalized intersections between the I-75 and Piquette Street would increase, the same as with Alternative B2 (Section 7.2.2). Within the curb-running LRT alignment, all stations would be located along existing sidewalks near signalized intersections. The proposed station design is presented in Section 7.2.3. In addition, all crosswalks accessing LRT platforms would be at signalized intersections with appropriate pedestrian signal heads. There are no proposed mid-block or unsignalized crosswalks along the Corridor.

Alternative B3 does not include exclusive bicycle lanes along the Corridor. Preliminary evaluation of the cross-sections for the inclusion of bicycle lanes is described in Section 7.2.2. There is no additional right-of-way space available to provide exclusive bicycle lanes without violating agreed-upon design standards and principles.

Within the curb-running alignment segment between Piquette Street and I-75, the proposed alignment consists of a parking lane on one side of the roadway only, an LRT/shared-use lane in each direction, and two general-use lanes in each direction, along with a continuous center left-turn lane (Figure 7-18). Per the *Michigan Vehicle Code* (2010), bicycles on Woodward Avenue would be required to ride either in the LRT/shared-use lane or in an unoccupied parking lane when available. Similar to the Preferred Alternative, bicycle access and storage at stations and bicycle storage on trains would be provided.

Non-Motorized Safety

Alternative B3 is not expected to have any impact on pedestrian safety in Downtown. Lower vehicle speeds in Downtown make it easier for cyclists to mix with vehicle traffic safely. Conflicts between bicycles and the LRT vehicles may occur.

Between I-75 and Piquette Street, the curb-running LRT is not expected to have an impact on pedestrian safety at unsignalized intersections, as all stations would be located at signalized intersections. Unlike a median-running alignment, a curb-running alignment would not provide any refuge to pedestrians jaywalking across Woodward Avenue at midblock locations. Further, the number of signalized intersections between I-75 and Piquette Street would increase, thereby providing more opportunities for pedestrian crossings at controlled locations. However, the proposed parking lane between the curb-running LRT and the sidewalk could result in conflicts between the LRT vehicle and drivers/passengers exiting or entering parked vehicles.

Bicycles on Woodward Avenue would utilize either the LRT/shared-use lane or the unoccupied parking lane on one side when available. In the LRT/shared-use lane, an open groove adjacent to the rail would be present to provide space for the wheel flange of the LRT vehicles. If a bicycle were to cross the rail at a very small angle, there is potential for the front wheel to drop into the groove and cause the rider to lose balance. State-of-practice investigation indicated that bicyclists in areas with LRT tracks in the rightmost lane are more likely to fall and be injured.

Potential Mitigations or Design Improvements

While the Alternative B3 cross-section does not include bicycle lanes, there are a number of options available to better accommodate bicycle traffic along the Woodward Avenue Corridor.

Alternative Rail Design

A special type of girder rail could be considered for use on this Project, which has a smaller gap between the rail flange and the pavement. This rail design has the potential to reduce, but not eliminate, the danger of the flange gap for cyclists. However, this type of girder rail is not currently manufactured in the United States and may require a “Buy America” rule exception, which may not be feasible. While the potential may exist to special-order fabrication of the rail through a manufacturer in the United States, this option may be cost-prohibitive.

Education Program

An educational program to advise cyclists on how to properly cross the tracks could be implemented during the construction phase. This may include public service announcements, workshops with local bicycling groups, and warning signs along the Corridor.

Alternative Bicycle Routes

Development of alternative bicycle routes is discussed in Chapter 6.0, Section 6.3. Given the potential hazard of the flange groove, the above-mentioned education campaign may include encouraging bicyclists to use other routes.

Shared Bicycle/Vehicle Lanes

An 11-foot-wide shared vehicle/bicycle lane with a shared lane marking in the right-most travel lane is a possible accommodation for the Preferred Alternative and Alternative A1. With Alternative B3, the proposed 12.5-foot-wide LRT/shared-use lane could be marked in the same manner, although the position of the shared lane marking in the lane would need to be evaluated during the design phase of project development (see Chapter 6.0, Figure 6-10 for pavement marking).

7.3.3 Motor Vehicle Safety

Changes to motor vehicle safety along the Corridor north of Piquette Street would be the same as with the Preferred Alternative (Chapter 6.0, Section 6.4).

Between I-75 and Piquette Street, the LRT is proposed to be in the outermost lane of traffic with Alternative B3. There are no proposed changes to intersection operations, other than adding TSP at all intersections and transit-only phases at some intersections (Section 7.8.1). As there would be no changes to vehicle turning movements along roadways or at signalized intersections, no reduction in vehicle/vehicle crashes or vehicle/pedestrian crashes would be expected along the LRT alignments.

With LRT vehicles sharing the curb-side lane with motor vehicles, there is potential for conflicts between LRT vehicles and motor vehicles. Motorists in the LRT/auto lane may seek to quickly merge into the adjoining lane when an LRT vehicle approaches from behind, increasing the potential for side-swipe and rear-end crashes. Motorists traveling in the lane adjacent to the LRT/shared-use lane may instinctively swerve away from a passing LRT vehicle and into the adjoining lane, also increasing the potential for side-swipe crashes. There is also increased risk of rear-end and sideswipe crashes from motorists avoiding the LRT vehicle stopped at a station. An informational campaign may be needed to inform drivers of the potential interaction between LRT and other vehicles.

Compared with the portion of the Corridor north of I-75, there is likely to be more interaction between LRT vehicles and other vehicles within Downtown Detroit due to the narrower roadway widths, and the likelihood that it will be necessary for the rail guideway to be level with the adjacent general-use lane. Separation between the rail guideway and the general-use lane may be confusing to motorists along these roadways, causing an increase in sideswipe crashes. Mitigation to this may include the addition of colored pavement treatments for the rail guideway, or the addition of bollards between the LRT guideway and the general-use lane to let motorists know that the rail guideway is for the train only. Conflicts between LRT vehicles and other vehicles may also occur in locations where the LRT vehicle crosses other vehicle paths to make a turn. At these locations, an LRT only phase would be added to the traffic signal.

7.3.4 Parking

Changes to existing parking along the Corridor north of the Grand Boulevard would be the same as with the Preferred Alternative (Chapter 6.0, Section 6.5). Changes to existing parking between I-75 and Grand Boulevard would be the same as with Alternative B2, which is discussed in Section 7.2.4. The number of parking spaces along Woodward Avenue within Downtown Detroit would be impacted by Alternative B3. Table 7-7 summarizes the existing and estimated number of parking spaces with Alternative B3. This is based on updated information on the alignments, which includes station areas, typical cross sections, and transition areas. The updated cross section for Alternative B3 between I-75 and Piquette Street includes the removal of parking from the east side of the street along the entire alignment. An average approximate parking space length of twenty feet was used to determine the number of parking spaces; however, this may vary due to bus stop locations, fire hydrants, and driveway locations.

Table 7-7. Estimated Parking Spaces with Alternative B3

Section	Existing	Alternative B3	Net Change
Larned between Washington and Griswold	12	12	0
Larned between Griswold and Randolph	0	0	0
Randolph between Congress and Larned	14	14	0
Congress between Randolph and Griswold	3	3	0
Congress between Griswold and Washington	17	17	0
Washington between Michigan and Larned	2	2	0
Washington between State and Michigan	15	15	0
Washington between Grand River and State	40	40	0
Grand River between Woodward and Washington	7	7	0
State between Woodward and Washington	0	0	0
Woodward between Larned Street and Campus Martius	3	9	+6
Woodward between Campus Martius and State	6	0	-6
Woodward between State and Grand River	8	8	0
Woodward between Grand River and Adams	10	10	0
Woodward between Adams and I-75	0	0	0
Woodward between I-75 to Alexandrine	137	56	-81
Woodward between Alexandrine to Kirby	145	34	-111
Woodward between Kirby to Piquette	68	11	-57
Woodward between Piquette to Grand	46	0	-46
Woodward between Grand to Clairmount	126	0	-126
Woodward between Clairmount to McLean	187	0	-187
Woodward between McLean to Sears	81	29	-52
Woodward between Sears to McNichols	48	0	-48
Woodward between McNichols to 7 Mile	98	321	+223
Woodward between 7 Mile and 8 Mile	27	258	+231
Total	**1,100**	**846**	**-254**

Source: Parsons Brinckerhoff, 2011

For parking impacts north of Piquette Street, refer to Chapter 6.0, Section 6.5. Many of the properties along the Corridor have available off-street parking either next to the building or behind the building.

There are currently more than 29,000 parking spaces available in public parking structures in Downtown Detroit (Figure 7-11). Current parking rates range from $1 per hour for metered on-street parking and up to $4 per hour within parking structures. According to the City of Detroit Municipal Parking Department, which operates six of these garages, the average weekday utilization of the garages ranges from 50 to 75 percent, varying by location of facility. Given these utilization rates, it is likely that these public parking structures, supplemented by on-street parking within one block of locations where parking spaces would be lost and other available surface parking lots would have adequate available parking within Downtown Detroit to offset parking space losses. The cost to park may increase over time due to the reduction of on-street parking availability within Downtown.

On the east side of Woodward Avenue, north of Willis Avenue, there are four businesses that currently have adjacent on-street parking, and would not have adjacent on-street parking on Woodward Avenue with the Project and do not have access to an adjacent parking lot. Figure 7-12 illustrates the locations of these businesses. Their impacts and proposed mitigation are previously discussed in Section 7.1.4.

7.3.5 Freight Movement

Changes to freight movements along the Corridor north of the Northbound I-75 Service Drive are the same as the Preferred Alternative and are discussed in Chapter 6.0, Section 6.6.

Trucking and Deliveries

Existing trucking and delivery activities within Downtown Detroit are discussed in Section 7.1.5.

Deliveries along the roadways with the exclusive LRT rail guideway and only one general-use lane in each direction would be prohibited. Deliveries along roadways with two general-use lanes would be restricted during the peak traffic times (7 to 9 a.m. and 3 to 6 p.m.). Deliveries along roadways that have an outside LRT/shared-use lane on both sides of the roadway would be prohibited (Table 7-8).

It is not anticipated that there would be any restrictions for deliveries along Randolph Street. Deliveries would be restricted at locations where there are station locations. The table below summarizes the expected delivery restrictions by roadway segment.

Table 7-8. Delivery Restrictions

Section	Alternative B3
Woodward between Campus Martius and State	All-Day
Woodward between State and Grand River	All-Day
Woodward between Grand River and Adams	All-Day
Woodward between Adams and I-75	All-Day

Source: Parsons Brinckerhoff, 2011

Between I-75 and Piquette Street, all existing turning movements would be allowed with Alternative B3, and there would be no limitation on u-turns for heavy vehicles, though they are not allowed at intersections and are not encouraged mid-block.

A turning analysis was conducted for right-turning trucks to determine any impact to truck movements due to the proposed cross-section of Woodward Avenue. This analysis is discussed in Section 7.3.5.

7.3.6 Emergency Vehicles

Impacts to emergency vehicles along the Corridor north of Piquette Street are the same as the Preferred Alternative and are discussed in Section 6.7.

Impacts to emergency vehicles along the Corridor between Downtown Detroit and Piquette Street would be the same as with Alternative B2 and are discussed in Section 7.2.6.

7.3.7 Traffic Operations

Much like the Preferred Alternative, Alternative B3 would generally include removal of a lane in each direction of travel along Woodward Avenue between Piquette Street and State Fair Avenue

to accommodate the median-running LRT operation (Chapter 6.0, Section 6.8). The configuration of roadways including the LRT within Downtown Detroit, including any changes from existing conditions for Alternative B2 are described in Section 7.3. Proposed intersection operations with the LRT, the use of TSP, and traffic operations are discussed below.

Methodology

Traffic volumes and signalization changes north of Piquette Street for Alternative B3 would be the same as with the Preferred Alternative (Chapter 6.0, Section 6.8). Traffic volumes used to evaluate Alternative B3 between I-75 and Piquette Street are based on the 2030 No Build traffic volumes (Appendix C and Appendix Q of this report, respectively). It was assumed that no vehicles would divert to other roadways or switch modes due to the proposed LRT. This is a worst-case scenario, as downtown roadways generally have surplus capacity and could accommodate additional diverted trips (Chapter 4.0, Figure 4-1).

Transit Signal Priority (TSP)

TSP along Woodward Avenue north of Downtown Detroit is the same as the Preferred Alternative and described in Chapter 6.0, Section 6.8. TSP is also proposed at signalized intersections throughout Downtown Detroit for all alternatives. The same assumptions and methodology that were used for the Preferred Alternatives is used for all alternatives (Chapter 6.0, Section 6.8.1). LRT-only phases were added at various locations, as described in Section 7.3.

Traffic Conditions

All intersections are expected to operate with an overall LOS D or better during the morning and evening peak hours under Alternative B3. While the overall intersections are operating at an acceptable level of service overall, a number of individual approaches are operating at LOS E during the morning or evening peak hours. These approaches are:

- Westbound Gerald Street – morning peak hour
- Eastbound Buena Vista Street – morning and evening peak hours
- Eastbound Tuxedo Street – morning peak hour
- Eastbound/Westbound Chicago Street / Arden Park Blvd – evening peak hour
- Westbound Holbrook Street – morning peak hour
- Eastbound Putnam Street – evening peak hour

The westbound Buena Vista Street approach to Woodward Avenue would operate at LOS F in the morning peak hour. In the future morning peak hour, there is expected to be 13 vehicles using this approach. A LOS F for this approach is the result of the addition of side-street detection and the low volume of vehicles arriving at the signal. With the proposed cycle length of 120 seconds at this intersection and the low volume, vehicles may need to wait for more than 80 seconds for the green signal, which is the criteria for LOS F. Typically, mitigation is not applied for signalized approaches that have such low traffic volumes.

Table 7-9 summarizes the anticipated travel time for a vehicle to travel along Woodward Avenue between State Fair Avenue and the northbound I-75 Service Drive southbound in the morning peak hour and northbound in the evening peak hour.

It would take approximately 21 minutes for a vehicle to travel along southbound Woodward Avenue during the morning peak hour from State Fair Avenue to the Northbound I-75 Service

Drive. Northbound during the evening peak hour, it would take approximately 25 minutes to travel from the Northbound I-75 Service Drive to State Fair Avenue. Comparing this to the 2030 No Build condition, it would take approximately six to nine more minutes for a vehicle to travel these sections.

Table 7-9. Vehicle Travel Time along Woodward Avenue with Alternative B3

Section		Travel Time	
		Southbound in Morning Peak Hour	**Northbound in Evening Peak Hour**
I-75	MLK Jr. /Mack	2 min 26 sec	3 min 6 sec
MLK Jr. /Mack	Warren	2 min 24 sec	2 min 35 sec
Warren	Antoinette	2 min 41 sec	3 min 12 sec
Antoinette	Glendale	6 min 54 sec	7 min 28 sec
Glendale	McNichols	3 min 28 sec	4 min 57 sec
McNichols	State Fair	3 min 12 sec	3 min 48 sec
Total		**21 min 5 sec**	**25 min 6 sec**
Average Speed		**22.8 mph**	**19.1 mph**

Source: Parsons Brinckerhoff, 2011

7.3.8 Construction Impacts

Construction-related impacts along the Corridor north of Piquette Street would be the same as with the Preferred Alternative (Chapter 6.0, Section 6.9).

Transit Service

Within Downtown Detroit, construction of an LRT system would cause some roadways to be either closed or have reduced laneage. As a result, transit service along any roadway that is closed would need to be rerouted to a nearby roadway. Existing traffic patterns would be affected during construction, which would result in longer travel times and may result in temporary detours for some bus routes.

Between I-75 and Piquette Street, the majority of construction activity would occur in the outside traffic lane and the existing parking lane for Alternative B3. This would interfere with the ability of buses to pull into existing stops, and may result in an accessibility issue for some users. In addition, existing traffic patterns would be affected during construction, which could result in longer travel times and temporary detours for some bus routes. Construction of LRT platforms adjacent to the existing sidewalks may necessitate shifts in bus stop locations.

In areas where construction would prevent buses from pulling into existing stops, bus stops would be relocated outside the immediate construction zone and a clear accessible path from the sidewalk through the construction zone would be maintained. Where temporary detours or stop relocations are necessary, DDOT would issue a Rider Alert, which would be posted at affected stops, on buses, at schedule distribution outlets, and on the DDOT website.

Motor Vehicle and Non-Motorized

With construction of curb-running stations within Downtown and along Woodward south of Piquette Street, construction fencing would be placed between the construction zone and the adjoining sidewalk. At curbside LRT stops under construction, a through path would be maintained along the sidewalk behind the construction zone. During the construction any of the alternatives, cyclists would continue to ride in the rightmost traffic lane. Construction would likely result in reduced vehicle travel speeds, allowing cyclists to mix with vehicle traffic more safely.

Parking

Construction of the LRT along the Corridor would be completed in two phases. Phase 1 would entail construction of the southern section between Downtown and Grand Boulevard. Phase 2 would entail construction of the northern segment of the Woodward Avenue LRT Project, from Grand Boulevard to the Michigan State Fairgrounds. During Phase 1, construction of the LRT within Downtown Detroit would cause the loss of all parking during any construction staging. This is due to the narrower roadway widths and the possibility of even some roadway closures during construction. Access to businesses would be maintained during all phases and stages of construction.

Construction of the LRT between Adams Street to Grand Boulevard during Phase 1 would entail closing half of Woodward Avenue during a construction stage. One travel lane along Woodward Avenue would be maintained in each direction and left-turn lanes would be maintained at signalized intersections. Left-turn access at unsignalized intersections may not be maintained. On-street parking may be feasible between signalized intersections on only the side of the roadway where traffic is maintained. On-street parking on the other side would not be maintained.

Between Grand Boulevard to McNichols Road, Phase 2 construction of the LRT would entail closing half of Woodward Avenue during a construction stage. One travel lane along Woodward Avenue would be maintained in each direction. Left-turn lanes may not be provided and left-turns along Woodward Avenue could be restricted. Parking would be removed during construction in this section.

North of McNichols Road, Phase 2 construction may entail closing the inner most lanes of Woodward Avenue for the construction of the LRT guideway. Cross-overs would be closed during construction, causing vehicles to travel to the next cross-over to turn around. Parking along Woodward Avenue could be maintained, but may be restricted in the peak period in the peak direction (i.e. restricted along northbound Woodward Avenue in the evening rush hour).

Deliveries along all roadways with construction would be prohibited.

7.3.9 Other Impacts

This section of the report discusses other impacts that relate to Alternative B3.

Driveway Impacts at Station Locations on Woodward Avenue

With Alternative B3, 11 driveways would be removed north the Northbound I-75 Service Drive to accommodate the proposed LRT stations. In some locations, the existing driveways lead to vacant parcels; in others, the driveways lead to active businesses, in some cases providing the businesses' only access to Woodward Avenue. The driveway and access impacts, due to LRT

station locations, and potential refinement of station locations to reduce the impacts are discussed in Section 7.2.9.

Signal Design

Section 7.2.9 provides a generalization of how the overhead catenary wire for the curb-running LRT between I-75 and Piquette Street and signal heads at signalized intersections would coexist. Chapter 6.0, Section 6.10.1 outlines MDOT's typical clearance heights and distances. Within Downtown Detroit, all signalized intersections require mast arm mountings based on a City of Detroit ordinance.

Snow Removal

The LRT vehicles would be capable of running in snow, as they will push snow from the tracks. In heavy snow conditions, the trains may need to run at a higher frequency to keep the tracks clear or may need to run overnight. The process to remove snow from vehicle travel lanes would not change from existing conditions. The LRT/shared-use lane would need to be plowed in order to accommodate motor vehicles. Snow from travel lanes should not be piled at station locations due to ADA requirements, so some snow hauling may be necessary to keep these areas clear.

Long Term Construction Impacts to Woodward Avenue

Future rehabilitation or reconstruction of the Woodward Avenue Corridor after completion of the LRT construction must consider maintenance of both automobile and LRT traffic. While automobile traffic can be transitioned from lane to lane or detoured to other routes to accommodate construction activity, the LRT operates on a fixed rail guideway, and options to transition or detour LRT traffic are therefore limited. In general for major reconstruction activities, it is proposed that part-width construction be utilized, with a minimum of one automobile travel lane in each direction on one side of the road, along with a single LRT rail guideway maintained. Two-way LRT traffic would be maintained on the single guideway through the use of strategically placed crossover rails and train signals installed during the initial construction. This operation would likely require prohibition of left turns along the Corridor due to limited space to provide left-turn storage. Depending on the nature of the construction activity, it may not be possible to maintain LRT traffic in one or both directions. In that case, operation of LRT in the peak direction only may be considered, with enhanced bus operations serving the off-peak direction. In some cases, use of buses may be required to serve LRT users should the LRT need to be taken out of service entirely due to construction activities.

7.3.10 Vehicle Storage and Maintenace Facility Sites

VSMF sites considered for Alternative B3 are the same as considered for Alternative A1 and are discussed in Section 7.3.10.

8.0 Summary

This chapter summarizes the characteristics of and differences among the No Build Alternative and the Preferred Alternative, as well as other Project alternatives (A1, B2, and B3) that were analyzed regarding transit, motorized and non-motorized safety, parking, emergency services, and other transportation impacts.

8.1 Transit Service, Safety, and Security

The No Build Alternative would increase bus service along Woodward Avenue for DDOT buses. All alternatives propose to construct LRT along the Woodward Avenue Corridor. The Preferred Alternative proposes a median-running LRT alignment between Grand Circus Park in Downtown Detroit and the Michigan State Fairgrounds. Within Downtown Detroit, the Preferred Alternative' alignment begins and ends at the Rosa Parks Transit Center, providing the closest connection to this multi-modal transit center. North of Downtown, the median-running LRT would operate at speeds up to the posted speed limit and be unimpeded by adjacent traffic. Alternative A1 is similar to the Preferred Alternative, but has three fewer stations and has a different alignment and stations in Downtown. Alternatives B2 and B3 have a curb-running LRT alignment south of Piquette Street and different alignments and stations in Downtown. The curb-running LRT would operate at the speed of adjacent traffic up to the posted speed limit. The Preferred Alternative and Alternatives A1, B2, and B3 would have the same LRT stations north of Piquette Street (Table 8-1).

Table 8-1. LRT Station Locations South of Piquette Street

LRT Station	Alternative			
	Preferred	**A1**	**B2**	**B3**
Cobo Center: Larned at Shelby Street & Congress at Shelby Street	X	X	X	
Woodward: Larned at Woodward & Congress at Woodward			X	X
Randolph St.: Larned at Randolph & Congress at Randolph		X		
Randolph Street			X	
Rosa Parks Transit Center (Washington Boulevard)	X	X	X	
Michigan Avenue	X			X
State/Gratiot			X	
Grand River		X		
Adams/Grand Circus Park	X		X	X
Foxtown/Stadium	X	X	X	X
Temple Street	X		X	X
MLK Blvd./Mack Avenue	X	X	X	X
Canfield Street	X		X	X
Warren Avenue	X	X	X	X
Ferry Street	X		X	X
Piquette Street / Amtrak	X	X	X	X
Total Stations (including 8 north of Piquette St)	**19**	**16**	**21**	**18**

Source: Parsons Brinckerhoff, 2011

The operating options, median- versus curb-running, of the proposed LRT system would affect system reliability, which is a major factor for a successful LRT system. With the Preferred Alternative, the LRT would have an exclusive guideway north of Downtown and, therefore, little interaction with vehicular traffic. Given the lower traffic volumes along Woodward Avenue, the traffic operation analysis indicates very little congestion on an average weekday with any of the alternatives. However, there are many special events in Downtown that affect traffic on Woodward Avenue, which are not captured in this analysis. For example, Comerica Park (home of the Detroit Tigers baseball team) is located immediately south of I-75, one block from Woodward Avenue. During the summer, afternoon games frequently end around the evening peak period, resulting in large surges in traffic volumes along Woodward Avenue, I-75, and M-10. A sensitivity test was conducted of the median-running (Preferred Alternative and Alternative A1) and curb-running (Alternatives B2 and B3) alignments by increasing the volume of traffic along Woodward Avenue during the evening peak hour to determine the potential effect on LRT travel time (Figure 8-1).

Figure 8-1. Comparative Reliability of the Preferred Alternative and Curb-Running Alignments as a Function of Traffic Volume*

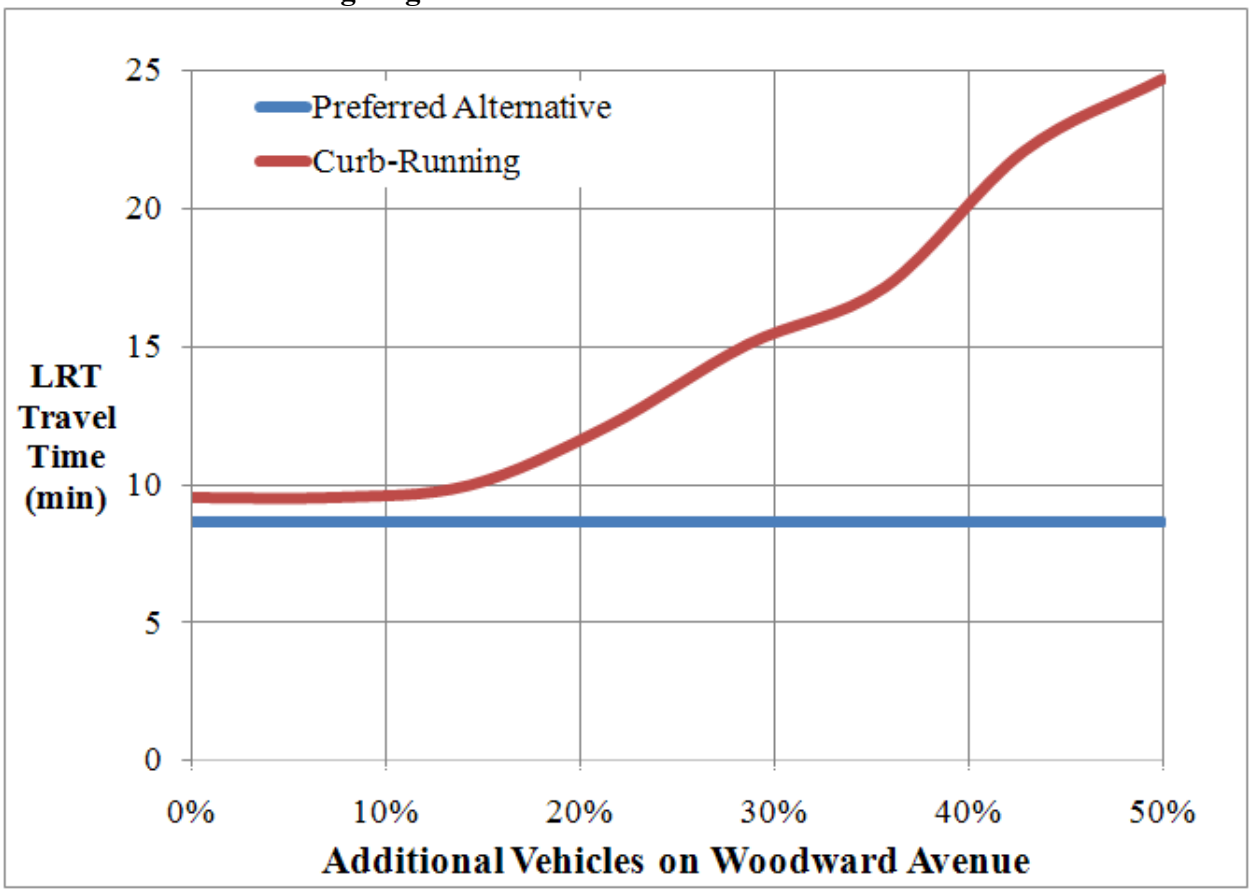

Source: Parsons Brinckerhoff, 2011
* Between Foxtown Station and Piquette Station

The anticipated LRT travel time with the Preferred Alternative with increased special-event traffic volume conditions is not anticipated to increase over typical traffic conditions, while

travel times with curb-running Alternatives B2 and B3 would increase. These results indicate that fluctuations in traffic volumes along Woodward Avenue would impact the reliability and speed of Alternatives B2 and B3, which would travel in mixed traffic. The Preferred Alternative and Alternative A1, which would travel in an exclusive guideway, would not be subject to these same fluctuations.

8.2 Non-Motorized Facilities and Safety

The new Complete Streets legislation requires MDOT to adopt a Complete Streets policy within two years (by August 1st, 2012). A "Complete Street" is defined as a roadway designed to support legal users, including pedestrians, bicyclists, motorists and public transportation users. Woodward Avenue from Adams Avenue to State Fair Avenue is under MDOT's jurisdiction; therefore, the impacts to all users should be considered in the evaluation of the Woodward Avenue Corridor.

The No Build Alternative was assumed to have no change to the non-motorized conditions along the Corridor.

North of Piquette Street, the Preferred Alternative and Alternatives A1, B2 and B3 would add some signalized intersections along the northern part of the Corridor, enabling a safer environment for pedestrians to cross Woodward Avenue. It would also result in reduced walking distances to cross Woodward Avenue, and some signalized intersections in this area would be removed. South of Piquette Street, some signalized intersections would be removed with the Preferred Alternative and Alternative A1. The increased crossing distance may motivate pedestrians to jaywalk at midblock locations. This condition may be mitigated by adding signalized or un-signalized crossings in some locations where signals would be removed. There are no bicycle lanes proposed with the Preferred Alternative or Alternative A1 due to roadway width constraints, but the reduced vehicle travel speeds would help bicyclists to mix with traffic more safely. Bicyclists would have to share the road with general-use traffic.

South of Piquette Street, Alternatives B2 and B3 would not remove additional signals and would result in no change in pedestrian conditions along the Corridor. Signalized crosswalks could be added in some areas, where warranted; however, unsignalized crosswalks are not recommended due to the number of lanes on Woodward Avenue. There are no bicycle lanes proposed with Alternatives B2 and B3 along Woodward Avenue due to roadway width constraints. Bicyclists would have to share the outside lane with LRT and other vehicular traffic. There are safety concerns for bicycle users with Alternatives B2 and B3 due to the potential for bicycle tires to be caught within the rail flange space in the road. While alternative rail types may reduce this potential conflict, it cannot be fully mitigated.

Transit Cooperative Research Program (TCRP) Report 137: *Improving Pedestrian and Motorist Safety Along Light Rail Alignments* indicates that collisions between pedestrians and LRT vehicles in the systems reviewed represented only about 10 percent of the total, but were the most severe. Bicycle collisions represented 3 percent of total collisions. One of the recommendations from the study to reduce this number is separation of LRT space from the space occupied by other modes (i.e., automobile traffic). The separation can be anything from a physical separation, landscaping, or a change in pavement type. The Preferred Alternative, and Alternative A1, would operate in a semi-exclusive LRT lane, while Alternatives B2 and B3 would operate in a shared-use lane.

8.3 Motor Vehicle Safety

The No Build Alternative would have no change in the estimated number of crashes along the Woodward Avenue Corridor.

There were 64 sideswipe, head-on, and left-turn crashes between signalized intersections from 2005 to 2008 along the Corridor. The Preferred Alternative, and Alternative A1, would likely reduce these types of crashes, as the LRT would separate the northbound and southbound lanes for auto travel. Also, all intersections proposed to have a left-turn-only lane would have protected left-turn phases, which would help reduce angle and head-on left-turn crashes.

With a semi-exclusive right-of-way, the only interaction between the LRT vehicle and motor vehicles would be at signalized intersections. Left turns would not be permitted at unsignalized intersections along the LRT alignment. At signalized intersections where left turns would be allowed, there is potential for conflict between the LRT vehicle and a left-turning automobile. Physical treatments, such as static warning signs or active train warning signals that alert drivers to the presence of an LRT vehicle, may be used to address left-turn safety issues.

South of Piquette Street, Alternatives B2 and B3 would travel in the outermost lane of traffic. Since there would be no changes to vehicle-turning movements proposed along roadways or at signalized intersections with these alternatives, no reduction in vehicle/vehicle crashes or vehicle/pedestrian crashes would be expected along the LRT alignments.

With LRT vehicles traveling in the curb-side lane with autos, potential conflict between LRT vehicles and autos would be greater with Alternatives B2 and B3 than with the Preferred Alternative and Alternative A1. Motorists in the LRT/shared-use lane may seek to quickly merge into the adjoining lane when a LRT vehicle approaches from behind, increasing the potential for side-swipe and rear-end crashes. Motorists traveling in the lane adjacent to the LRT/shared-use lane may instinctively swerve away from a passing LRT vehicle and into the adjoining lane, also increasing the potential for side-swipe crashes. Finally, the potential for increased crashes would be even greater for trucks and buses traveling in or next to the LRT/shared-use lane. An informational campaign may be needed to inform drivers of the potential interaction between LRT and other vehicles.

Transit Cooperative Research Program (TCRP) Report 69: *Light Rail Service: Pedestrian and Vehicular Safety* indicates that, while the frequency of crashes with LRT systems are generally low, collisions that occur are generally more severe. The report found that there are fewer crashes with semi-exclusive facilities (similar to the Preferred Alternative and Alternative A1) than with non-exclusive facilities (Alternatives B2 and B3). The report found an average crash rate of 0.17 crashes per year per LRT crossing, based on roadways that have speeds greater than 35 mph. This section of Woodward Avenue is posted for a speed of 30 mph. The report further states:

> *"In addition, LRT crossings on semi-exclusive rights-of-way are even safer than LRT crossings in shared rights-of-way with LRV speeds less than 35 mph."*

Table 8-2 summarizes the approximate number of crossings with the Preferred Alternative and Alternative A1 and Alternatives B2 and B3 (including driveways) between Downtown Detroit and Piquette Street. The number of potential conflict points is more than double with

Alternatives B2 and B3, compared with the Preferred Alternative, excluding any interaction with driveways, which were not included.

Table 8-2. LRT Crash Comparison of Alternatives*

Alternative	Number of Crossings	Yearly Crash Potential
Preferred Alternative & A1	13	2.2
Alternatives B2 & B3	32**	5.4

Source: Parsons Brinckerhoff, 2011
*Between Downtown Detroit and Piquette Street
**Does not include driveways

8.4 Parking

The No Build Alternative would have no change in the amount of parking along the Woodward Avenue Corridor's roadways; there are currently 1,100 parking spaces (296 metered and 804 non-metered). Table 8-3 summarizes the anticipated loss of parking spaces that would result with each alternative south of Piquette Street and in Downtown Detroit. The number of parking spaces anticipated to be lost north of Piquette Street, a total of five spaces, would be the same with all alternatives. In particular, very limited parking would be available between Grand Boulevard and McNichols Road. Approximately 413 parking spaces, only two of which are metered, would be removed in this area.

Table 8-3. Parking Comparison of Alternatives*

Alternative	Spaces Lost between Piquette and Downtown	Spaces Lost in Downtown Detroit	Total Spaces Lost
Preferred Alternative	-111	-40	-151
Alternative A1	-7	-81	-88
Alternative B2	-249	-39	-288
Alternative B3	-249	0	-249

Source: Parsons Brinckerhoff, 2011
*South of Piquette Street

All four alternatives would reduce the number of parking spaces along Woodward Avenue and along the respective alignments in Downtown Detroit. The Preferred Alternative would reduce the total number of parking spaces by 151 in Downtown Detroit to Piquette Street. Alternative A1 would impact the least number of parking spaces, with an expected loss of 88 spaces south of Piquette Street, as A1 would have three fewer stations north of Downtown. Alternatives B2 and B3 would have a greater parking space loss due to the removal of parking on one side of the street north of Downtown Detroit, as well as more parking spaces removed near the LRT station locations.

8.5 Traffic Operations

Table 8-4 summarizes the anticipated overall intersection levels of service that would result at the major intersections along the study corridor with the No Build Alternative, the Preferred Alternative, and Alternatives A1, B2, and B3.

All intersections would operate at level of service (LOS) D or better with the future No Build (mitigated), the Preferred Alternative, and Alternatives A1, B2 and B3. While the overall intersections would operate at an acceptable level of service, a number of individual approaches would operate at LOS E during the morning or evening peak hours with all alternatives. These approaches are:

- Westbound Gerald Street – evening peak hour
- Eastbound Buena Vista Street – morning and evening peak hours
- Eastbound Tuxedo Street – morning peak hour
- Eastbound Chicago Street – evening peak hour
- Westbound Holbrook Street – morning peak hour
- Eastbound Putnam Street – evening peak hour

The westbound Buena Vista Street approach to Woodward Avenue would operate at LOS F in the morning peak hour. In the future morning peak hour, there is expected to be 13 vehicles using this approach. A LOS F for this approach is the result of the addition of side-street detection and the low volume of vehicles arriving at the signal. With the proposed cycle length of 120 seconds at this intersection and the low volume, vehicles may need to wait for more than 80 seconds for the green signal, which is the criteria for LOS F. Typically, mitigation is not applied for signalized approaches that have such low traffic volumes.

Table 8-4. Future 2030 Morning and Evening Peak-Hour Intersection Levels of Service

Intersection	Morning Peak Hour/Evening Peak Hour				
	No Build	Preferred Alternative	A1	B2	B3
Larned & Randolph	C / C	A/B	B/C	C/B	B/B
Larned & Washington	C / B	C/C	C/B	B/C	B/C
Congress & Randolph	C / C	B/C	C/C	C/C	C/C
Congress & Washington	B / B	D/C	C/B	C/A	C/A
Fort & Washington	B / B	B/C	C/C	C/C	C/C
Michigan & Washington	B / C	B/C	B/C	B/B	B/B
Grand River & Washington	B / B	B/B	B/B	B/B	B/B
Woodward & Larned	B / B	C/C	C/B	B/C	C/B
Woodward & Congress	B / C	C/C	C/C	C/A	C/C
Woodward & Campus Martius (South)	A / B	A/B	A/A	A/B	A/B
Woodward & Michigan	B / B	A/A	A/B	A/A	A/A
Woodward & Campus Martius (North)	A / A	B/B	A/A	A/A	B/B
Woodward & State/Gratiot	B / B	A/A	A/B	B/B	B/A
Woodward & Grand River	B / B	B/A	B/B	B/B	B/A
Woodward & Park	B / B	B/B	C/C	B/B	B/B

Intersection	Morning Peak Hour/Evening Peak Hour				
	No Build	Preferred Alternative	A1	B2	B3
Woodward & Adams	A / A	B/B	C/B	B/B	A/B
Woodward & NB I-75	B / B	B/B	A/B	A/B	
Woodward & SB I-75	C / B	B/C	B/B	B/B	
Woodward & MLK Jr. /Mack	B / B	C/D	C/D	C/C	
Woodward & Warren	B / C	C/D	C/D	B/C	
Woodward & Grand Blvd	B / B	C/B			
Woodward & Clairmount/Owen	A / A	C/C			
Woodward & Calvert/Trowbridge	A / A	C/B			
Woodward & Glendale/McLean	A / A	B/C			
Woodward & EB M-8	A / B	B/C			
Woodward & WB M-8	A / A	A/B			
Woodward & Manchester	A / B	C/C			
Woodward & McNichols	A / B	B/C			
Woodward & 7 Mile	A / B	A/B			
Woodward & State Fair	B / B	B/B			

Source: Parsons Brinckerhoff, 2011

Tables 8-5 and 8-6 summarize the anticipated travel times along Woodward Avenue with the No Build Alternative, the Preferred Alternative and Alternatives A1, B2, and B3.

Table 8-5. Non-LRT Travel Time along Southbound Woodward Avenue in Morning Peak Hour

Section		Vehicular Travel Time			
		No Build	Preferred Alternative	Alternative A1	Alternatives B2/B3
State Fair	McNichols	2 min 29 sec	3 min 12 sec		
McNichols	Glendale	2 min 54 sec	3 min 28 sec		
Glendale	Grand	4 min 18 sec	6 min 54 sec		
Grand	Warren	1 min 55 sec	3 min 46 sec	3 min 50 sec	2 min 41 sec
Warren	MLK Jr. /Mack	1 min 25 sec	2 min 36 sec	2 min 37 sec	2 min 24 sec
MLK/Mack	Adams	1 min 54 sec	2 min 26 sec	2 min 45 sec	2 min 26 sec
Total		**14 min 55 sec**	**22 min 22 sec**	**22 min 46 sec**	**21 min 5 sec**

Source: Parsons Brinckerhoff, 2011

Table 8-6. Non-LRT Travel Time along Northbound Woodward Avenue in the Evening Peak Hour

Section		Vehicular Travel Time			
		No Build	**Preferred Alternative**	**Alternative A1**	**Alternatives B2/B3**
Adams	MLK Jr. /Mack	1 min 48 sec	3 min 30 sec	3 min 23 sec	3 min 6 sec
MLK Jr. /Mack	Warren	1 min 36 sec	3 min 37 sec	4 min 3 sec	2 min 35 sec
Warren	Grand	1 min 56 sec	2 min 37 sec	3 min 49 sec	3 min 12 sec
Grand	Glendale	4 min 5 sec	7 min 28 sec		
Glendale	McNichols	4 min 32 sec	4 min 57 sec		
McNichols	State Fair	2 min 31 sec	3 min 48 sec		
Total		**16 min 28 sec**	**25 min 57 sec**	**27 min 28 sec**	**25 min 6 sec**

Source: Parsons Brinckerhoff, 2011

Non-LRT travel times would increase by 7 to 10 minutes between State Fair Avenue and Downtown Detroit with the Preferred Alternative. The section of Woodward Avenue between Piquette Street and Glendale Street would have the largest travel time increase.

8.6 Conclusion

Table 8-7 provides a comparison of each of the transportation elements for the No-Build Alternative, the Preferred Alternative and Alternatives A1, B2, and B3.

Table 8-7. Comparison of Alternatives

Measure	No Build	Preferred Alternative	Alternative A1	Alternative B2	Alternative B3
Motor Vehicle Safety	No Change	Minor positive impact	Minor positive impact.	Minor negative impact.	Minor negative impact.
Pedestrian Safety	No Change	Minor positive impact	Minor positive impact.	No change	No change
Bicycle Safety	No Change	Minor positive impact	Minor positive impact	Negative impact	Negative impact
Number of Parking Spaces	No Change	Loss of 156 spaces	Loss of 93 spaces	Loss of 293 spaces	Loss of 254 spaces
LRT Travel Time Reliability	Travel time is dependent on traffic	Travel time is predictable	Travel time is predictable	Travel time dependent on traffic	Travel time dependent on traffic
Traffic Operations	LOS D or better	LOS D or better	LOS D or better	LOS D or better	LOS D or better
Non-LRT Vehicular Travel Time (north of Downtown)	Increase of 0-1 minute from today	Increase of 7-10 minutes for corridor compared to No Build	Increase of 7-11 minutes for corridor compared to No Build	Increase of 7-9 minutes for corridor compared to No Build	

9.0 List of References

American Association of State Highway and Transportation Officials. 2004. *A Policy on Geometric Design of Highways and Streets.*

American Railway Engineering and Maintenance-of-Way Association. 2010. *Manual for Railway Engineering.*

Boorse, J., Hill, M., & Danaher, A. January 2011. General Design and Engineering Principles of Streetcar Transit. *ITE Journal, Volume 81 (1)*, 38-42.

City of Detroit, Department of Public Works, City Engineering Division. Amended 2007. *Street and Alley Standard Plans.*

City of Detroit. 2006. *Non-motorized Urban Transportation Master Plan.*

City of Detroit. 2004. *Downtown Transportation Master Plan: A multi-modal plan for downtown transportation.*

Detroit Department of Transportation. 2009. *Detroit Transit Options for Growth Study: Locally Preferred Alternative Report.*

Federal Highway Administration. 2002. *Safety Effects of Marked vs. Unmarked Crosswalks at Uncontrolled Locations: Executive Summary and Recommended Guidelines*.

Federal Transit Administration. 2010. *National Transit Database.* http://www.ntdprogram.gov/ntdprogram/

Institute of Transportation Engineers. 1998. *Design and Safety of Pedestrian Facilities.*

Institute of Transportation Engineers. 2008. *Trip Generation, An ITE Informational Report, 8th Edition.*

Michigan Department of State Police. 2008. *State of Michigan UD-10 Traffic Crash Report Manual.*

Michigan Department of Transportation. Amended 2011. *MDOT Road Design Manual.*

Michigan State Law Chapter 257. Act 300 (1949) (enacted). Amended 2010. *State of Michigan Vehicle Code.*

Southeast Michigan Council of Governments (SEMCOG). 2004. *2030 Regional Transportation Plan for Southeast Michigan.*

Southeast Michigan Council of Governments (SEMCOG). 1997. *SEMCOG Traffic Safety Manual, 2nd Edition.*

Transportation Research Board National Research Council. 2000. *Highway Capacity Manual.*

Transportation Research Board Transit Cooperative Research Program. 1996. *TCRP Report 17: Integration of Light Rail Transit into City Streets.*

Transportation Research Board Transit Cooperative Research Program. 2000. *TCRP Report 57: Track Design Handbook for Light Rail Transit.*

Transportation Research Board Transit Cooperative Research Program. 2009. *TCRP Report 137: Improving Pedestrian and Motorist Safety Along Light Rail Alignments.*

Transportation Research Board Transit Cooperative Research Program. 2010. *TCRP Report 83: Bus and Rail Transit Preferential Treatments in Mixed Traffic: A Synthesis of Transit Practice.*

Wilbur Smith Associates. 2006. *Woodward Avenue Transit Signal Priority Study VISSIM Model Documentation.*