Adjustments to Initial Bridge Alternatives

Three bridge arrangements were analyzed as part of the practical alternatives development to provide cost estimates and impact analysis. These arrangements include:

- Two-span steel plate girder bridge with equal 172 foot spans
- Three-span concrete I-beam bridge with two 104 foot spans and a 134 foot center span
- Three-span concrete I-beam bridge with equal 114 foot spans

Based upon the high cost of removing debris left behind from previous bridges, the constructability and maintenance issues inherent with steel beams, and the potential of encountering foundation debris as the proposed piers are located closer to the current piers as in the larger center span option, the design team recommends pursuing the **Three Span Concrete Beam arrangement with Equal Spans.** This recommendation is based upon the preliminary design done to date and should not be construed as a conclusion based upon a final design effort.

Further detail on the bridge span selection can be found in the "Bridge Span Evaluation" technical memorandum.

Sidewalks on the bridge were changed from seven foot wide to six foot wide for the practical alternatives. This provides one foot more than the standard and has been determined to be sufficient for the anticipated volume of pedestrian traffic across the bridge.

Comparison Matrix

The following matrix was compiled and presented at Public Information Meeting #2 comparing the practical alternatives. As shown in the matrix, Alternative #3B and Alternative #1 do not have permanent park or historic impacts. Practical Alternatives#2, #3, #3A, and #4 require ROW from the park or have impacts to the historic properties along St. Joseph Avenue. All of the improvement alternatives have ROW impacts to the YMCA property located in the northwest quadrant. Safety improvements will also be included in each of the improvement alternatives.

Table 2 – Decision Matrix

Alternative	Park Impact	Historic Impact	ROW Impact	Safety Improvements
1	N	N	N	N
2	Y	N	Y	Y
3	N	Y	Y	Y
3A	N	Y	Y	Y
3B	N	N	Y	Y
4	Y	Y	Y	Y

Cost

Estimated costs for the practical alternatives were developed using MDOT Standard pay items and average unit costs published by MDOT in the Weighted Average Item Price Report dated 7/7/2010. Estimated costs for each alternative are provided in **Table 3**.

Table 3 – Practical Alternative Cost Comaprison

Alternate	Roadway Cost (w/o Utility Relocations)	Bridge Cost (3-Span Bridge)	Project Cost (Road + Bridge)
1	$941,300	$5,244,200	$6,185,500
2	$708,100	$5,479,000 *	$6,187,100
3	$838,900	$6,968,200 *	$7,807,100
3A	$701,300	$7,111,800 *	$7,813,100
3B	$788,100	$5,118,900	$5,907,000
4	$780,300	$6,453,500 *	$7,233,800
*Bridge lengths are approximate. Prices based on unit cost derived for Preferred Alternate 3B			

Safety Improvements

Safety improvements were compiled from engineering analysis of the traffic data, safety analysis, and geometric review. During the RSA, all of these issues were brought to the attention of the design team and other observations were also presented. All safety issues are discussed in the following section and then compared with each Practical Alternative. Additional safety issues were identified in the study area but can be implemented independently of the bridge replacement and have no impact on the alternative selection. These items can be found in the Safety Analysis under separate cover.

Implementation of RSA

A Road Safety Audit was conducted on July 7th and 8th, 2010 to identify safety issues that can be addressed during the planning and design phases of the project. Several observations were documented and recommendations were compiled in the final report and summary. Recommendations from the Road Safety Audit include the following safety issues:

- Sidewalk too narrow on bridge
- Front and Main Street intersection improvements needed
- Sidewalks between Front Street and the bridge need replacement
- Driveway to parking lot in northeast quadrant has been used as a cut-through to avoid the traffic signal
- Poor sight distance from driveway in southest quadrant when exiting driveway
- Main Street Bridge has poor horizontal and vertical geometry
- St. Joseph intersection has poor vertical geometry and pedestrian crossings are not aligned
- Sight distance issues on the pedestrian path since it has been opened to bicyclists

All alternatives will address the issue of sidewalks on the bridge. The current cross section of the bridge accounts for a six-foot wide sidewalk on each side. The existing sidewalk width on the bridge is four feet wide. Current ADA guidelines require a five-foot sidewalk with one-foot shy distance from walls and barriers.

Improvements to the intersection of Front Street and Main Street are not currently included any of the practical alternatives. Improvements to this intersection could be included in the project but also may be completed as an independent project.

The sidewalks between Front Street and the bridge are shown as being replaced due to vertical profile changes of M-139 in this area. Alternative # 1 is the only alternative that does not include replacement of the sidewalks through this stretch of the project since it does not improve the vertical alignment of the bridge and roadway.

All alternatives except Alternative #1 include closing of the driveway to the city parking lot adjacent to the park (northeast quadrant). Issues identified at the road safety audit and requests from stakeholders will allow MDOT to close this driveway permanently during and after reconstruction of the bridge.

Except for Alternative #1, poor sight distance from the driveway in the southeast quadrant of the bridge is addressed in all alternatives. How much this improves depends on the alternative due to the ability to remove the reverse curves and straighten the alignment. Alternative #4 provides the best sight distance, with the roadway being a straight line between the intersections of State Street and Front Street. Sight Distance is reduced once curves are introduced and the distance between them are reduced. With each alternative except for #1, correcting the vertical profile will substantially improve the sight distance looking west onto the bridge and the wider cross section of the bridge adds to this improvement.

Similar to the previous discussion, the roadway alignment is improved in all alternatives except for Alternative #1 due to the improved vertical profile and increased bridge width. Addition of horizontal curves will decrease the sharp deflection of the roadway. Alternative #4 removes all deflection in the roadway and would provide increased sight distance for driveways and St. Joseph Street but adds deflections at the intersections of State Street and Front Street.

All alternatives involve the reconstruction of the St. Joseph and Main Street Intersection. With this reconstruction, the intersection can be aligned to allow the east/west traffic to have priority over the St. Joseph traffic. Proposed changes to the use of St. Joseph Street will allow for trucks to be removed from this road and vehicular traffic volume to decrease. This further dictates this intersection to be realigned and curve radii reduced. By reducing the radius in the southeast quadrant, the sidewalk ramps can be better aligned across from each other and a shorter distance between the curbs and sidewalk ramps be constructed.

All alternatives involve replacement of the east bridge abutment which will require reconstruction of a portion of the bicycle path. The bridge replacement options will place the new abutment in a similar location to the existing one. There is the possibility with Alternatives 2-4 that the bike path could be moved to the east to help with sight distance on these curves.

Maintenance of Traffic

The maintenance of traffic scheme for all practical alternatives is to detour M-139 traffic across the Broadway Street bridge. This detour has been modified from the one that was previously described in Section 3 Initial Alternative Development. M-139 will be closed east of the intersection of M-139 and State Street on the west side of the river. On the east side of the river, it will be closed west of the M-139 and Front Street intersection. Each intersection (State Street and Front Street) will remain open during construction. The intersection of St. Joseph Avenue and M-139 will be closed. It is anticipated

that the Contractor will utilize the space between State Street and Front Street for staging and storage, as well as for any additional construction operations.

Discussions with the city of Niles recommended the use of Broadway Street to East Main Street (M-51) for the detour route but several design issues made the recommendation shift back to using 5th Street. One issue was the existing signing does not allow left turns onto East Main Street. The intersection is a very acute angle and also has an additional side street (10th Street) entering the intersection that causes a confusing six-legged intersection. Second, the right turning movement from southbound East Main Street is not conducive to right turns due to the acute angle. Trucks would not be able to use this route without using all of the southbound lanes by swinging wide from East Main Street and onto Broadway Street. Upgrading this intersection to accommodate the detour route would require additional ROW. To mitigate the city concerns with traffic turning right from 5th Street onto southbound East Main Street, signs will direct traffic for southbound M-51 to use Broadway Street (Figure 9). Also northbound M-51 will be signed for traffic to use Broadway Street to southbound M-139 rather than using the 5th Street intersection.

The only changes to the detour route between the Practical Alternatives would be its duration. For Alternative #4, the west abutment is constructed off alignment and would allow for the bridge to remain open during the construction of this abutment, possibly shortening the duration of the detour. However, issues with storage of material, moving equipment, and material handling could make maintaining two lanes of traffic difficult thus negating any advantage Alternative #4 could provide.

Detour Route

The suggested M-139 detour route (described for northbound traffic) has traffic turn east from Lincoln Avenue onto Grant Street, cross the Broadway Street Bridge, then continue east on Broadway Street to 5th Street (**Figure 9**). Traffic then turns north on 5th Street (which becomes M-51 at M-139) until Wayne Street, and then heads west onto Wayne Street back towards M-139.

This route was chosen primarily because of the geometrics of 5th Street are the most favorable to convey traffic when compared to the other side streets. The intersection of 5th Street and Broadway Street has a large radius allowing southbound truck traffic to easily turn onto Broadway Street. The intersection of 5th Street and M-139 is signalized; an advantage ensuring that detoured traffic does not queue up on 5th Street. Wayne Street, the connection back to M-139, is a designated truck route for the city of Niles and thus serves as a suitable route to move traffic to and from M-139. The intersection of 5th Street and Wayne Street also features apt radii for truck turning movements.

Pedestrian Detour Route

Due to the limited work area, scope of construction, and limited staging area, it is not recommended to maintain the bike path using a crossing of Main Street at road grade. Instead a detour around the construction zone is recommended. The bike path (heading north) can be intercepted at the Broadway Street Bridge and brought to street level at the corner of Broadway Street and 2nd Street. The detour can then use 2nd Street north to Main Street, Main Street west to Front Street, Front Street north to Sycamore Street, and west on Sycamore Street to the Gazebo entrance that is ADA compliant and connects to the bike path further west. Pedestrians would have sidewalks available the entire detour except for the short distance along Sycamore Street that only has sidewalk to the city parking lot. The possible closure of a parking space may be required to provide access to the park sidewalks. Sycamore Street is very wide and is used for park access. Only three businesses have driveways located on

FIGURE 9
DETOUR ROUTE

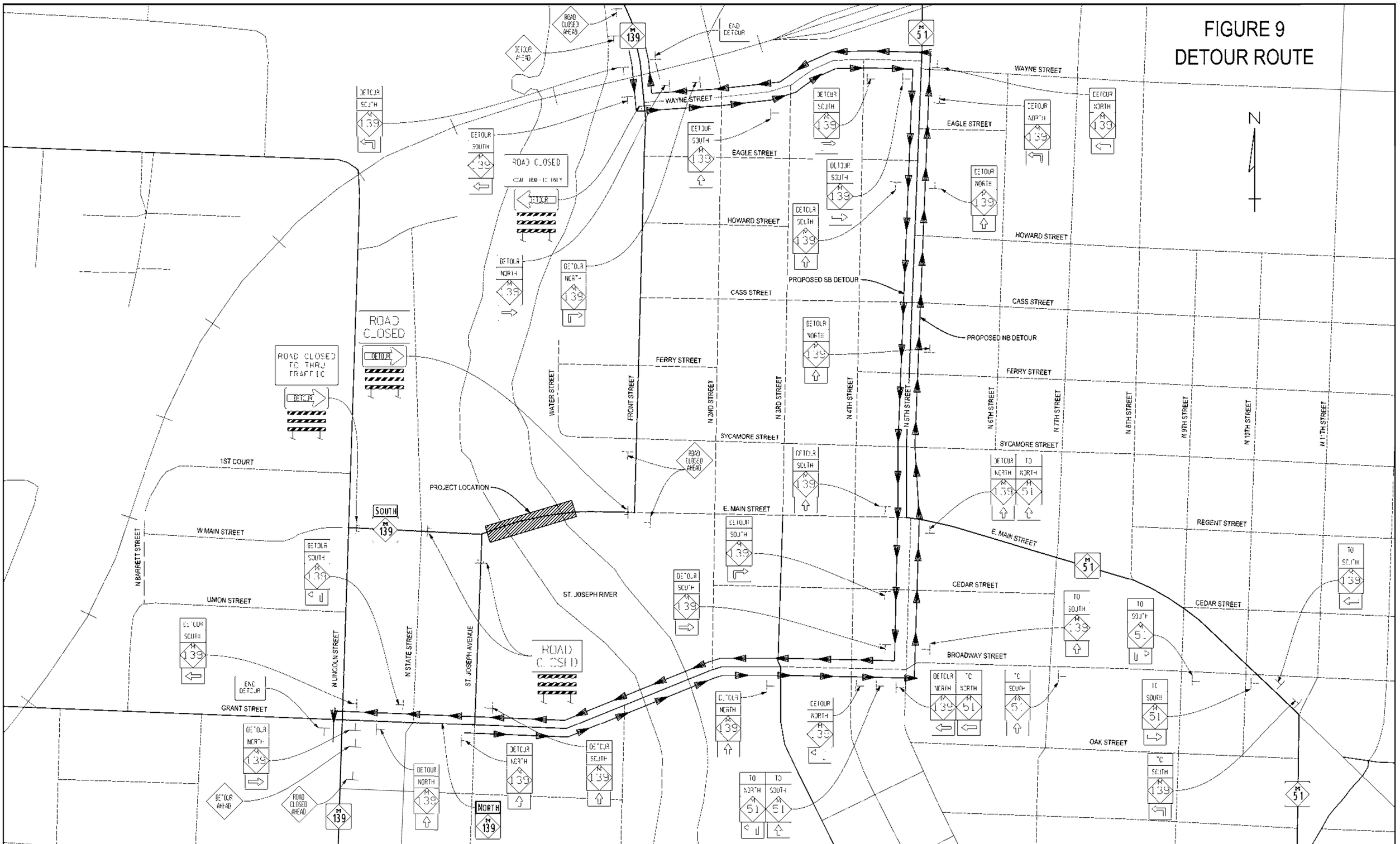

FINAL ROW PLAN REVISIONS (SUBMITTAL DATE)				AS-LET PLAN REVISIONS			
NO.	DATE	AUTH	DESCRIPTION	NO.	DATE	AUTH	DESCRIPTION

WilburSmith ASSOCIATES

MDOT Michigan Department of Transportation

VERT. (FT) 0 400
HORZ. (FT) 0 400

FILE: 104152_MTDETR_001.dgn

DATE: 03/25/11
DESIGN UNIT: WOOLCOCK
TSC: COLOMA

CS: 11021
JN: 104152

M-139 MAIN STREET BRIDGE REPLACEMENT
MAINTENANCE OF TRAFFIC
DETOUR MAP

DRAWING M-139
SHEET MOT 1

Sycamore Street, which limits the amount of traffic on this roadway. The total length of this detour is roughly one-quarter mile.

Pedestrians heading west across the Main Street Bridge will be directed south down St. Joseph Avenue and then turn east onto Grant Street. Upon crossing the Broadway Bridge, they will then tie into the existing detour described above. The total length of this detour is roughly one-half mile, including the existing detour.

The alternative to using the detour is providing temporary pedestrian pathways along the south side of Main Street to Front Street and then back along the north side of Main Street to the park entrance at the veteran's memorial. Typically this is done with plywood and lumber and placed outside the construction limits. The sidewalk improvements are extensive on the north side of Main Street and extend to the ROW line. On the south side of Main Street the sidewalk replacement goes to the planter islands which are adjacent to the ROW line. This would leave no room for temporary pathways. The construction activities in this area could also include the lifting of bridge beams, moving of steel reinforcement, and moving machinery which could cause unsafe conditions for adjacent walkways carrying pedestrians and bicyclists. The Maintenance of Traffic Technical Memorandum provides further detail on the MOT and the detour routes.

Impacts to Riverfront Park

All of the alternatives would require reconstruction of approximately 185 foot long segment of the bike path, as well as a part of the retaining walls adjacent to the bridge to allow for reconstruction of the bridge abutment. When construction of the abutment is complete, the path would be reconstructed to meet the current bike path requirements within MDOT ROW. Retaining walls would be reconstructed to match the existing condition while allowing for any improvements to the bike path due to current design standards.

Right-of-way Acquisition

Permanent ROW impacts to Riverfront Park are eliminated in Practical Alternatives #1, #3, #3A, and #3B while all other alternatives would create permanent ROW takes from the park property. ROW impacts to the former YMCA parcel in the northwest quadrant occur in all practical alternatives except for Alternative #1 which replaces the bridge in kind at its current location.

Table 4 shows the square foot impacts of each alternative in each quadrant.

Table 4 – ROW Impacts

Alternative	NW Quadrant	SW Quadrant	NE Quadrant	SE Quadrant	Total
1	-	700 sft*	-	-	700 sft
2	500 sft	-	-	600 sft	1,100 sft
3	12,000 sft	-	-	-	12,000 sft
3A	6,100 sft	-	-	-	6,100 sft
3B	2,600 sft	-	-	-	2,600 sft
4	7,700 sft	-	-	4,400 sft	12,100 sft

**Existing ROW encroachment*

Constructability

As with all MDOT projects, the storage of materials, staging of construction, parking, and other construction activity will not be allowed in park property. Storage of material will be confined to the limits of construction and road closure extents of the east springpoint of the State Street intersection to approximately the west springpoint of the Front Street intersection. St. Joseph Avenue will be closed just beyond the reconstruction limits. Within these limits all local driveways to homes shall be maintained within constraints identified in the MDOT Standard Specifications for Construction and other applicable standards. The west drive to the River Front Square is anticipated to be closed during construction but other drives are available for the businesses in this mall and no impacts are anticipated.

Each alternative has issues with constructability in terms of storage as described previously, and each type of bridge has it's own construction issues as discussed in the bridge alternatives with beams and beam types. Environmental constraints and construction practices make up the remaining constructability issues. Demolition of the existing structure over water would require turbidity curtains or other mitigation control are installed in the river to prevent transportation of sediments downriver. Excavation of debris from the river will need to comply with MDOT and MDEQ standards and permitting. Limitations on construction dates due to fish migration and animal habitat will be enforced during the construction.

Construction methods of the bridge replacement are being left to the decision of the design team, construction staff, and the Contractor. Identification of the constraints and worst case construction activities are included in the scope of the study at this time. Due to the different methods of bridge construction, this study does not limit the contractor to a single method of construction that may be more costly to MDOT or take longer during construction and cause undue impacts to the motoring public. Identification of environmental limitations and constraints will be included in the green sheet as part of the environmental clearance document and will be addressed during the design phase.

Two key items to the construction of the bridge will be accessibility for the launching of barges and the construction of cofferdams. Due to the location of dams upstream and downstream of the bridge, it may be difficult to get barges launched into the St. Joseph River at the project location. This may restrict construction methods the contractor can use. The construction of cofferdams will impede the use of the river to other traffic like recreational boats. The demolition of the three existing piers in the river and the construction of two new pier locations will make it difficult for other boat traffic to pass throough safely.

Preferred Alternative

The Preferred Alternative 3B was selected over the other practical alternatives for several reasons. While there are many similarities between 3B and the other alternatives, there are several distinct advantages. The Preferred Alternative effectively meets several project goals:

- The Riverfront Park will not be affected. The Riverfront Park, which is a Section 4f property, needs to have no impacts so the schedule can be adhered to. Section 4f impacts can cause a significant delay in project progress.
- There are no impacts to the two historic houses in the vicinity of this project. It is a paramount goal, not just to avoid project schedule delays, but to preserve the nature and character of the city of Niles.

- It provides improved safety criteria. The existing structure and its approaches have numerous geometric-related safety issues. The profile, in conjunction with the alignment, causes reduced sight distance across the bridge. Any considered alternative has to mitigate these issues.
- Right-of-Way impacts are to be minimized. ROW procurement is an expensive and time-consuming process. Alternative 3B, while significantly improving safety and geometrics, will only require ROW from the YMCA property. This property is already for sale, and the city of Niles will keep MDOT informed about any ownership transactions.

Alternative 3B is the only practical alternative that meets all of the above criteria. Alternative #1 only provides minimal safety improvements which were established as a more important goal than avoiding ROW acquisitions. Alternative #2 impacts the Riverfront Park, Alternative #3 and #3A have historic impacts, and Alternative #4 has both park and historic impacts. While these all provide safety improvements, their overall impacts outweigh the added benefits that they would provide. These impacts change the existing historic character of Niles and deviate from the nature of the downtown area.

APPENDIX 1
BRIDGE REPLACEMENT - IN-KIND GEOMETRICS

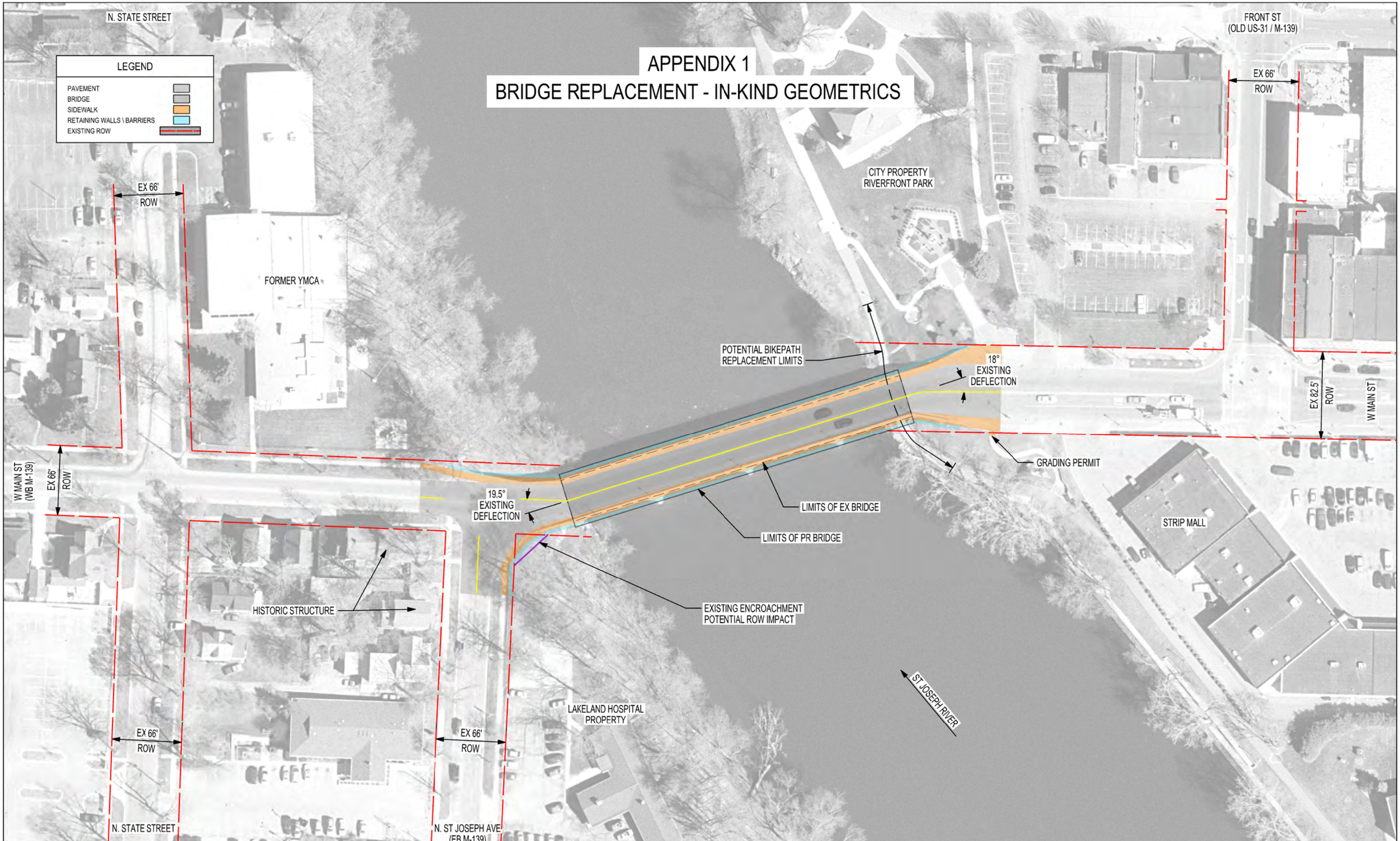

WilburSmith ASSOCIATES

MDOT Michigan Department of Transportation

M-139 BRIDGE RECONSTRUCTION

VERT. (FT) 0 80
HORZ. (FT) 0 80

DATE:07/09/10	CS: 11021
DESIGN UNIT: WOOLCOCK	JN: 104152
TSC: COLOMA	

APPENDIX 2
BRIDGE REPLACEMENT - IMPROVED GEOMETRICS

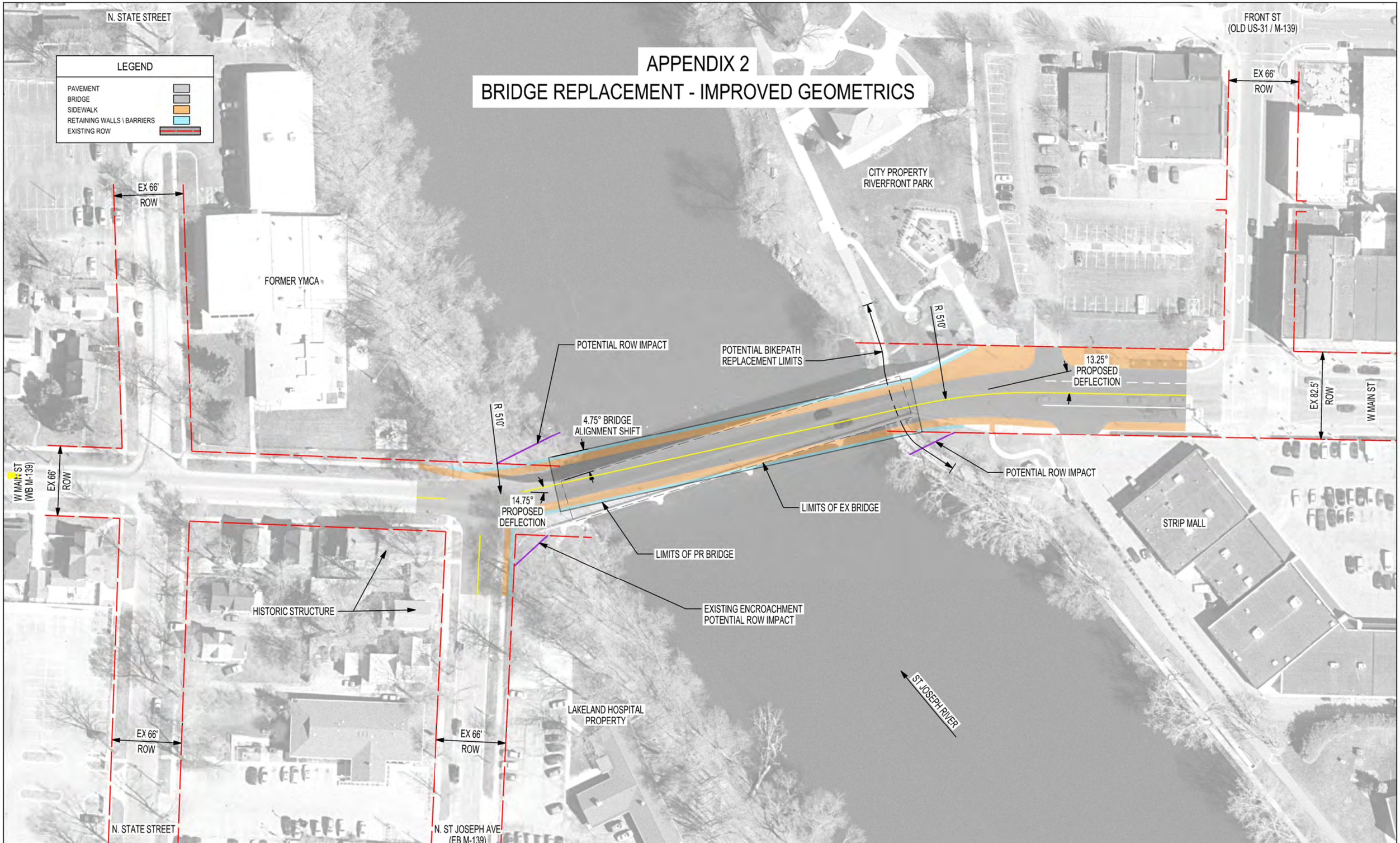

WilburSmith Associates	MDOT Michigan Department of Transportation	N W E S	M-139 BRIDGE RECONSTRUCTION	0 VERT. (FT) 80 / 0 HORZ. (FT) 80	DATE:07/09/10	CS: 11021
					DESIGN UNIT: WOOLCOCK	JN: 104152
					TSC: COLOMA	

REVISIONS			
NO.	DESCRIPTION	DATE	BY

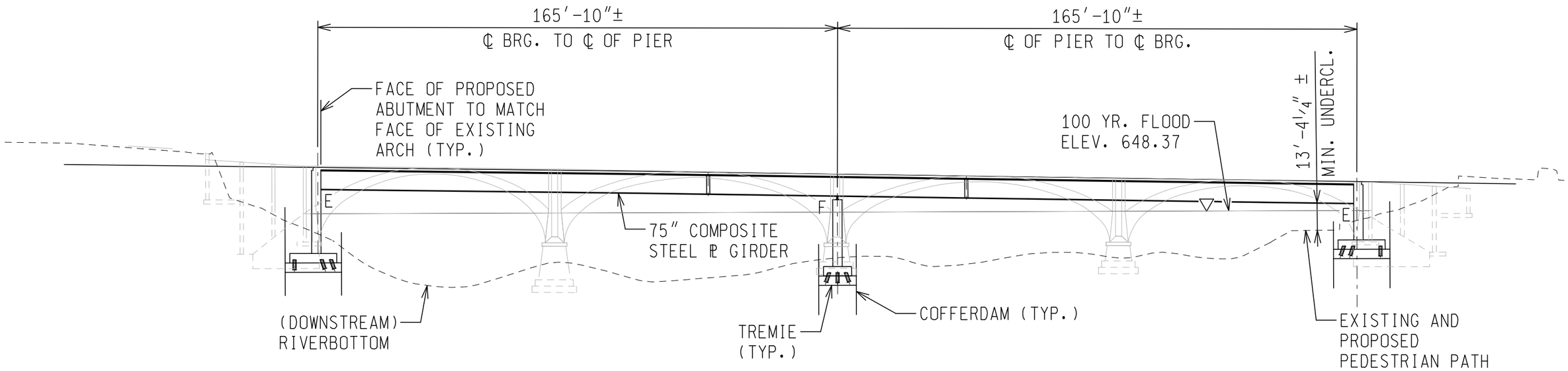

2 SPAN STEEL ALTERNATE 1

(NO PROFILE ADJUSTMENT)

APPENDIX 3

TranSystems
3100 WEST ROAD SUITE 230
EAST LANSING, MI 48823
(517) 332-3755

MDOT
Michigan Department of Transportation

2 SPAN STEEL ELEVATION – ALTERNATE 1
M-139 OVER THE ST. JOSEPH RIVER

DATE	CONT. SEC.	JOB NO.	DESIGN UNIT	SHEET
6/28/10	B02 OF 11021	104152	FEUERSTEIN	3 OF 4

DATE:
CORRECTED BY:
DATE:
CHECKED BY:
DATE:
DRAWN BY:
FILE NAME:

REVISIONS			
NO.	DESCRIPTION	DATE	BY

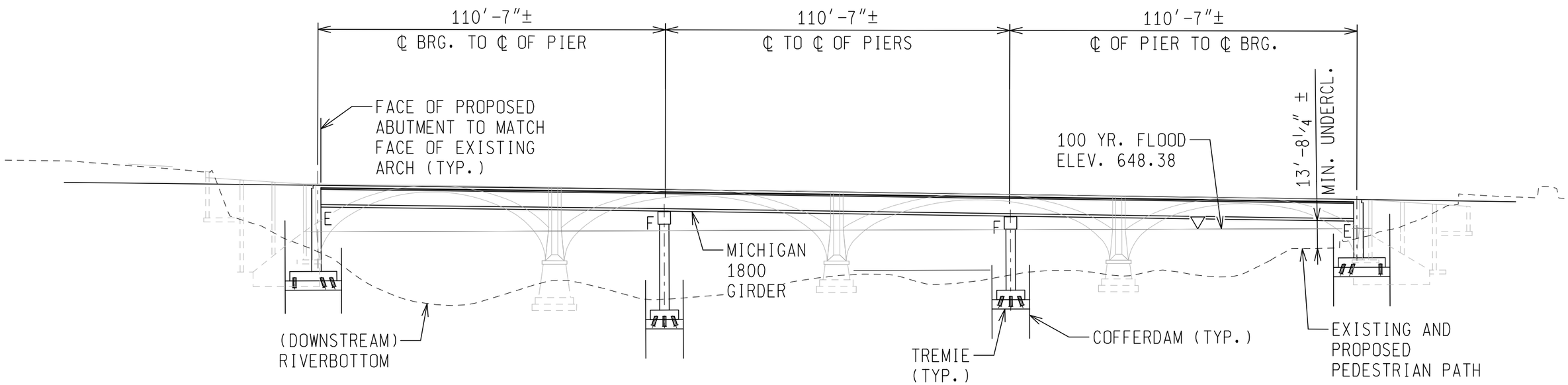

3 SPAN CONCRETE ALTERNATE 2

(NO PROFILE ADJUSTMENT)

APPENDIX 4

TranSystems
3100 WEST ROAD SUITE 230
EAST LANSING, MI 48823
(517) 332-3755

MDOT
Michigan Department of Transportation

3 SPAN CONCRETE ELEVATION – ALTERNATE 2
M-139 OVER THE ST. JOSEPH RIVER

DATE	CONT. SEC.	JOB NO.	DESIGN UNIT	SHEET
6/28/10	B02 OF 11021	104152	FEUERSTEIN	4 OF 4

DATE:
CORRECTED BY:
DATE:
CHECKED BY:
DATE:
DRAWN BY:
FILE NAME:

REVISIONS			
NO.	DESCRIPTION	DATE	BY

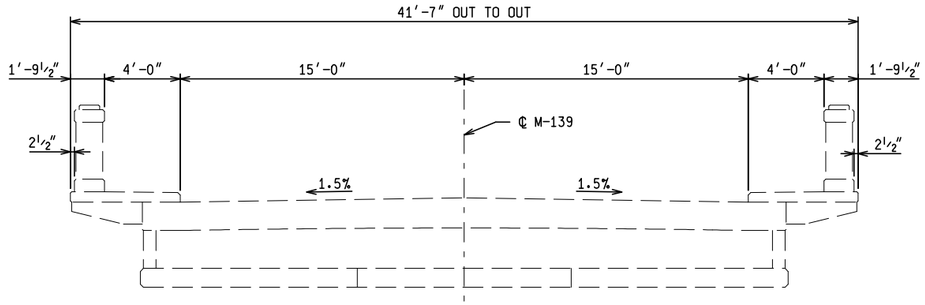

EXISTING CROSS SECTION

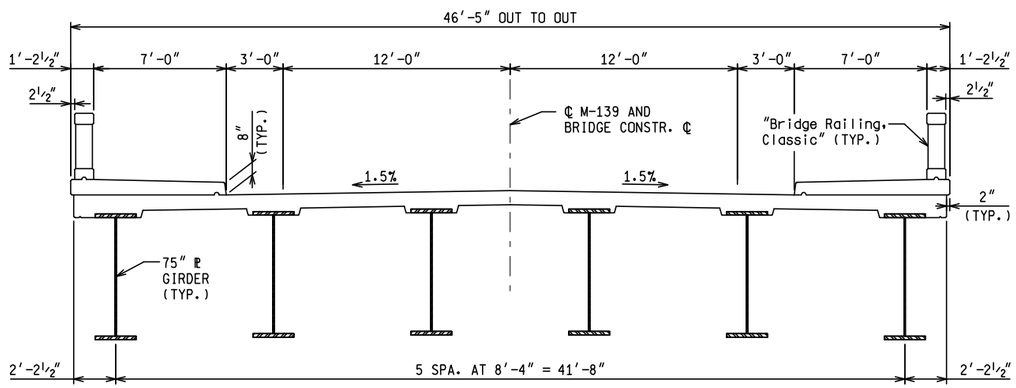

CROSS SECTION
ALTERNATE 1A

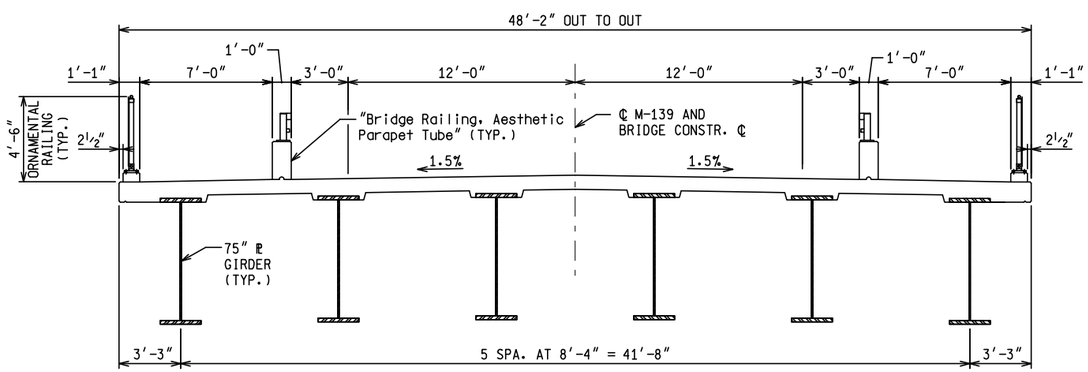

CROSS SECTION
ALTERNATE 1B

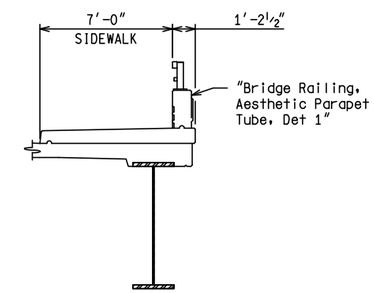

BARRIER OPTION 2

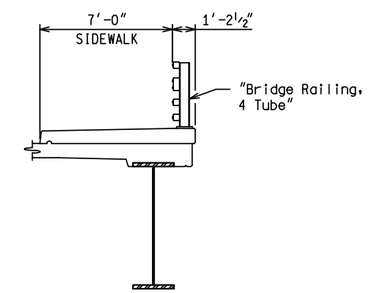

BARRIER OPTION 3

APPENDIX 5

TranSystems
3100 WEST ROAD SUITE 230
EAST LANSING, MI 48823
(517) 332-3755

MDOT
Michigan Department of Transportation

CROSS SECTIONS - ALTERNATE 1
M-139 OVER THE ST. JOSEPH RIVER

DATE	CONT. SEC.	JOB NO.	DESIGN UNIT	SHEET
6/28/10	B02 OF 11021	104152	FEUERSTEIN	1 OF 4

DATE:
CORRECTED BY:
DATE:
CHECKED BY:
DATE:
DRAWN BY:
FILE NAME:

REVISIONS			
NO.	DESCRIPTION	DATE	BY

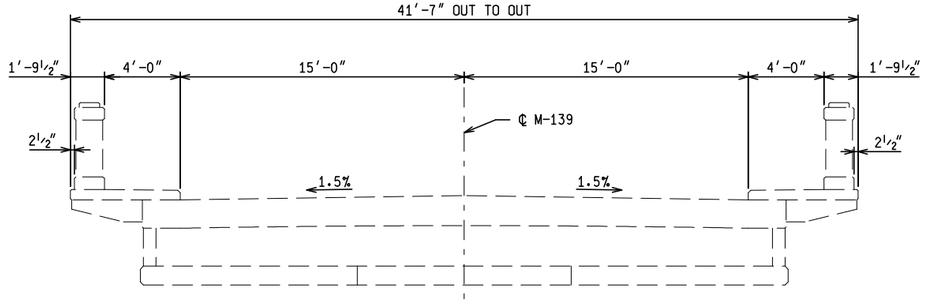

EXISTING CROSS SECTION

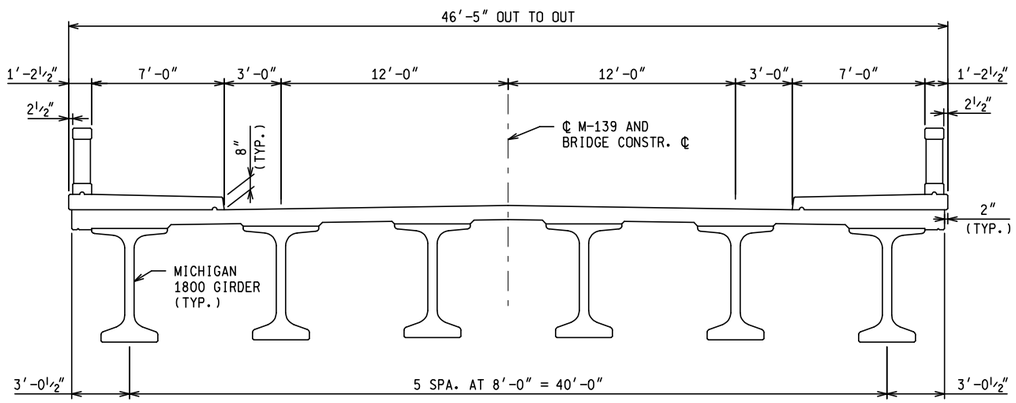

CROSS SECTION
ALTERNATE 2A

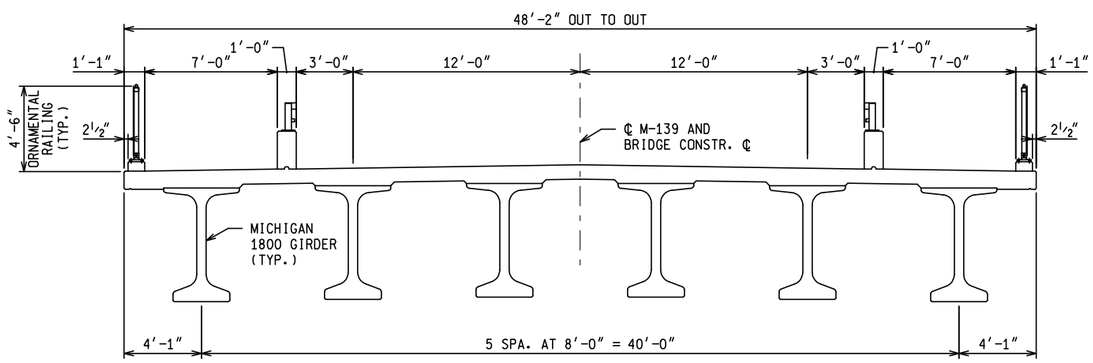

CROSS SECTION
ALTERNATE 2B

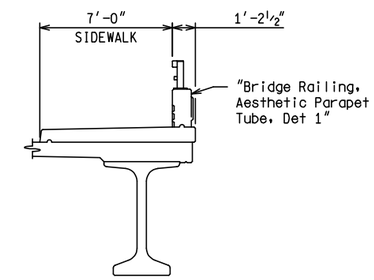

BARRIER OPTION 2

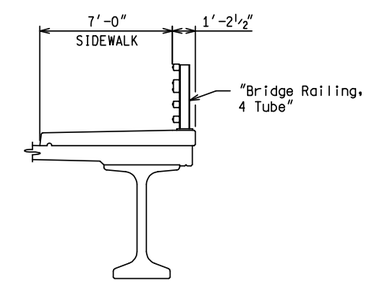

BARRIER OPTION 3

APPENDIX 6

TranSystems
3100 WEST ROAD SUITE 230
EAST LANSING, MI 48823
(517) 332-3755

MDOT
Michigan Department of Transportation

CROSS SECTIONS – ALTERNATE 2
M-139 OVER THE ST. JOSEPH RIVER

DATE	CONT. SEC.	JOB NO.	DESIGN UNIT	SHEET
6/28/10	B02 OF 11021	104152	FEUERSTEIN	2 OF 4

DATE:
CORRECTED BY:
DATE:
CHECKED BY:
DATE:
DRAWN BY:
FILE NAME:

APPENDIX 7
DETOUR ROUTE

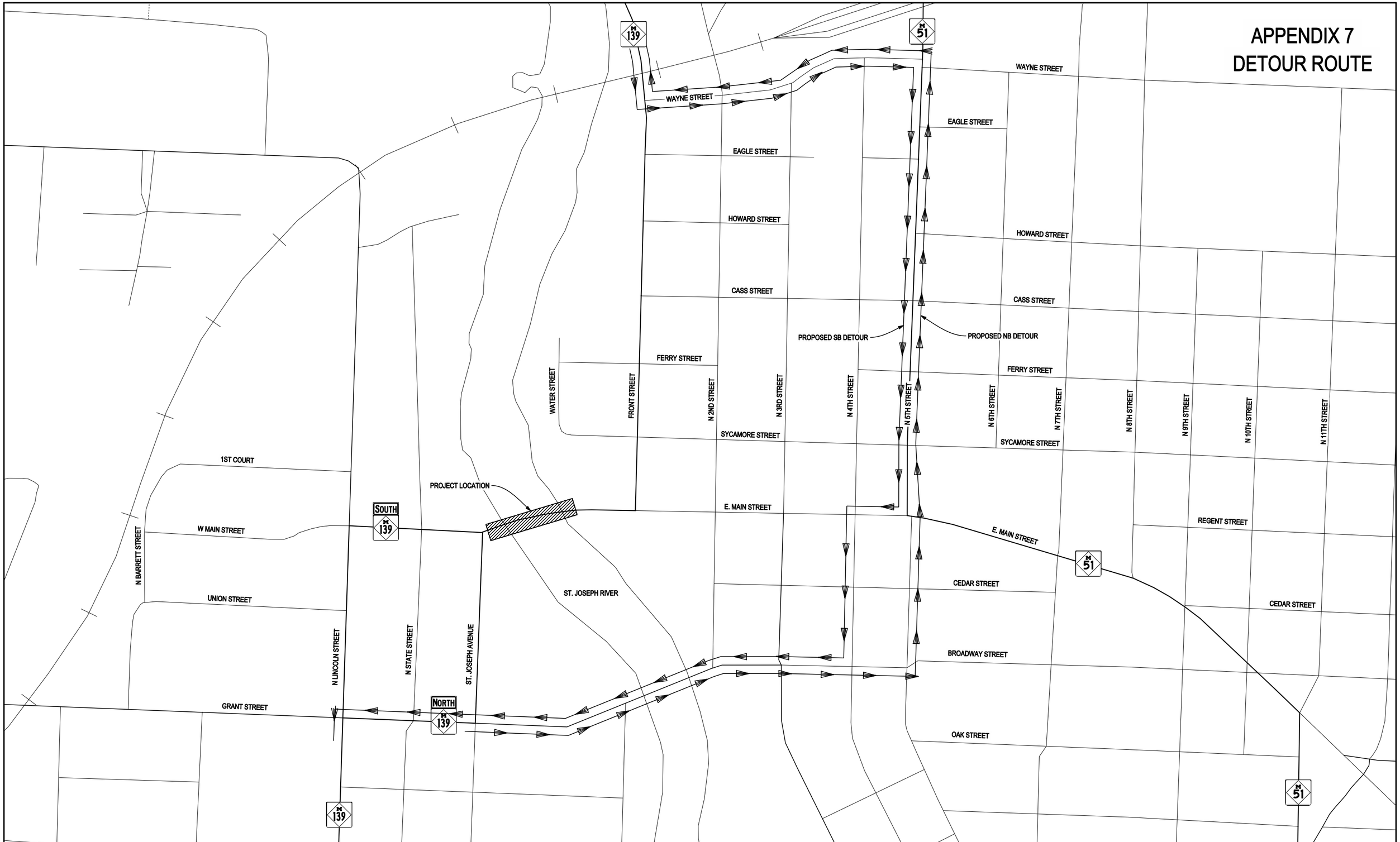

WilburSmith ASSOCIATES — ENGINEERS PLANNERS ECONOMISTS

MDOT Michigan Department of Transportation

M-139 BRIDGE DETOUR ROUTE

VERT. (FT) 0 400

HORZ. (FT) 0 400

DATE:07/09/10

DESIGN UNIT: WOOLCOCK

TSC: COLOMA

CS: 11021

JN: 104152

APPENDIX 8

BRIDGE SPAN EVALUATION TECHNICAL MEMORANDUM

Main Street (M-139) Bridge Replacement
Niles, Michigan

MDOT J.N. 104152

Technical Memorandum

Bridge Span Evaluation

DRAFT

Prepared by:

Wilbur Smith Associates

TranSystems

Prepared For:

The Michigan Department of Transportation

January 6, 2011

Table of Contents

Background **2**

Preferred Alternative **2**

Two Span Steel Plate Girders **2**

Three Span Concrete Beams with Equal Spans **3**

Three Span Concrete Beams with Larger Center Span **3**

Cost Estimate **4**

Design Team Recommendation **4**

Appendix A – Cost Estimates 5

Appendix B – Bridge Drawings 9

Background

This technical memorandum presents the engineering analysis and environmental impacts associated with the decision to construct a two span bridge versus a three span bridge for Main Street over the St. Joseph River in Niles, Michigan. During a meeting with MDNRE, MDOT and FHWA it was decided that an evaluation of the comparative bridge arrangements and their benefits and disadvantages be prepared.

The existing Main Street bridge is a four span reinforced concrete earth filled arch constructed in 1919, rehabilitated in 1995, and is scheduled for replacement due to scour critical issues and overall condition. Prior to this bridge a two span bow string arch bridge resided at this location which was built in the mid 1800's. A timber bridge which was destroyed by fire also predated the bow string bridge.

Preferred Main Street Alignment Alternative

The preferred alternative realigns the bridge to provide improved geometrics of the roadway while not impacting the linear park on the east side of the St. Joseph River. These geometric improvements include the inclusion of 510 foot radii at each end of the bridge, improvement of the vertical profile, and relocating the western abutment to the north to take advantage of available real estate. Within this horizontal and vertical alignment the bridge can be arranged as needed to allow proper hydraulic opening for water flow, minimize disturbance to the river and shoreline.

Three bridge arrangements were analyzed to provide cost estimates and impact analysis. These arrangements include:

- two span steel plate girder bridge with equal 172 foot spans
- three span concrete I-beam bridge with two 104 foot spans and a 134 foot center span
- three span concrete I-beam bridge with equal 114 foot spans

It is anticipated that the construction of each type of bridge is consistent with common MDOT construction practices. Availability of the bridge materials are not a concern due to the commonality of the materials and beam types. A summary of the cost of these bridges is provided in the Appendix along with historical cost estimates for the other illustrative alternatives for comparison.

Two Span Steel Plate Girders

The two span bridge would require a single bridge pier in the river in approximately the same location as the existing center pier for the current bridge. Using a single pier would require a larger pier than a multiple pier arrangement. The exact size difference would be determined during the design phase based on geotechnical investigation. Due to the span lengths, steel beams would also be required.

Location of this center pier will require complete removal of the existing center pier which will likely require construction of a cofferdam for removal of the existing foundation. No plans were available for previous bridges constructed prior to the current bridge on this site. It is unknown what material may remain from these previous bridges. Recent soil boring investigation near the existing east abutment revealed materials below grade that were not originally removed. This is also evident at both abutments above ground. Encountering the same material in the location of the center pier could become costly

and time consuming during construction. This could affect construction of the cofferdam and pile or drilled shaft placement.

Hydraulically the two span arrangement offers a slightly lower 100 year flood elevation than a three span option (648.37 vs. 648.38), however both options improve the existing condition of 648.43. A disadvantage however is less total freeboard is provided due to the deeper steel bridge girders required for the two span arrangement.

The linear park on the east bank of the river has a bike path along the river's edge. The deeper steel beams required for the two span option may affect the under clearance provided for this path.

Construction of the steel beams may also require field splices located over the waterway, which adds additional complexity and cost. Steel beam maintenance includes cleaning and coating periodically. This work is challenging over land and even more difficult over water due to the reclamation systems installed to capture the abrasives, removed coatings, and rust and to contain the overspray of the new coatings. This activity also impacts the use of the sidewalk and possibly a lane on the bridge during this time.

The estimated cost impact to install a two span bridge compared to the three span bridge is approximately $1.4 million additional. Including approximately $573K in roadway improvements, the total project cost for a two span bridge arrangement is $6,999,000. Detailed cost estimates can be found in Appendix A.

Bridge elevation, cross section and plan drawings can be found in Appendix B.

Three Span Concrete Beams with Equal Spans

The three span arrangement consists of two piers located to avoid conflicts with current or previous pier footings. Reduction of construction cost can be achieved by cutting the current piers flush along the top of the footing and leaving them in place.

Construction is simpler with shorter concrete beams than the large steel beams in both logistics in shipping and handling beams on site. The three span arrangement would also be slightly easier to construct rather than a larger center span due to the smaller size of the beams and their uniformity in size.

Other benefits of a three span, concrete bridge include;

- scour redundancy is provided for two piers in lieu of the single bridge pier for the two span arrangement
- concrete beams require less maintenance than steel beams.

Hydraulic differences discussed above in the two span arrangement show the minimal impact to the flood elevation when the two different arrangements are analyzed.

Bridge elevation, cross section and plan drawings can be found in Appendix B.

Three Span Concrete Beams with Longer Center Span

Similarities to the Three Span Concrete Beams with Equal Spans apply for this span arrangement. The only differences are that the larger center beams for this arrangement would be slightly more difficult to construct than the arrangement with equal span lengths due to the longer length, additional weight of the beams, and the added logistics of constructing and handling different size beams. Though this issue would be minor in comparison to dealing with the larger steel beams.

By lengthening the center span in this arrangement the piers are located closer to the current bridge piers (1 & 3) and could run into historical debris left in place as discussed previously.

Bridge elevation, cross section and plan drawings can be found in Appendix B.

Cost Estimate

Cost is summarized in the table below for the entire project consisting of roadway improvements and bridge replacement.

Improvement Description	Alternative	Bridge Cost	Total Cost w/Road Improvements
Roadway Improvements	3B		$572,717
Two Span Steel Plate Girders	3B-1	$6,434,600	$7,007,317
Three Span Concrete Beams with Larger Center Span	3B-2	$5,039,400	$5,612,117
Three Span Concrete Beams with Equal Spans	3B-3	$5,039,400	$5,612,117

Cost Estimates can be found in Appendix A. Because the cost is similar between the concrete beam alternatives, only the estimate for the larger center span option is provided.

Design Team Recommendation

Based upon the high cost of removing debris left behind from previous bridges, the constructability and maintenance issues inherent with steel beams, and the potential of encountering foundation debris as you move the proposed piers closer to the current piers as in the larger center span option, the design team recommends pursuing the Three Span Concrete Beam arrangement with Equal Spans. This recommendation is based upon the preliminary design done to date and should not be construed as a conclusion based upon a final design effort.

Appendix A

Cost Estimates

JN:	104152		
CS:	11021		
Estimate by:		Date:	
David Kent		January 6, 2011	
Checked by:		Date:	
Nathan Miller		January 6, 2011	
Revised by:		Date:	

PROJECT COST ESTIMATE: Main Street (M-139) Bridge Replacement

Item Section		Quantity	Units	Unit Cost		Section Total:	Total:
2. Earthwork							$56,472
2040011	Pavt, Rem	2094	Syd	$	4.00	$8,376	
2040013	Sidewalk, Rem	734	Syd	$	4.50	$3,304	
2050010	Embankment, CIP	8518	Cyd	$	3.50	$29,812	
2050016	Excavation, Earth	2453	Cyd	$	4.00	$9,812	
2060002	Backfill, Structure, CIP	463	Cyd	$	11.15	$5,167	
3. Bases							$14,805
3010002	Subbase, CIP	987	Cyd	$	7.00	$6,909	
3020016	Aggregate Base, 6 inch	1974	Syd	$	4.00	$7,896	
5. HMA Pavements & Surface Treatments							$41,758
5020044	HMA, 3E1	306	Ton	$	70.00	$21,388	
5020050	HMA, 4E1	204	Ton	$	55.00	$11,203	
5020056	HMA, 5E1	153	Ton	$	60.00	$9,166	
6. Portland Cement Concrete Pavement							$6,111
6020076	Conc Pavt, Misc, Reinf, 9 inch	122	Syd	$	50.00	$6,111	
7. Structures							$210,700
7067010	Structural Retaining Wall	2107	Sft	$	100.00	$210,700	
8. Incidental Construction							$26,955
8020010	Curb and Gutter, Bridge Approach	80	Ft	$	27.00	$2,160	
8020038	Curb and Gutter, Conc, Det F4	598	Ft	$	12.00	$7,176	
8020021	Curb and Gutter, Conc, Det C2	366	Ft	$	11.25	$4,118	
8030003	Sidewalk, Conc, 6 inch	4167	Sft	$	3.00	$12,501	
8507012	ROW purchases	0.10	Acre	$	10,000.00	$1,000	
SUB-TOTAL:							**$356,800**
Miscellaneous							
Maintenance of Traffic					3%	$10,703.99	
Pavement Markings					1%	$3,568.00	
Drainage					5%	$17,839.99	
Erosion Control					1%	$3,568.00	
Bikepath Work					5%	$17,839.99	
Aesthetics/Landscaping					3%	$10,703.99	
Structures, Rem					5%	$17,839.99	
SUB-TOTAL:							**$438,864**
Project Cleanup						$1,100	
Minor Traf Devices						$5,500	
Contractor Staking, Road Only						$9,000	
Mobilization, Max. ____						$22,800	
Contingencies					20%	$95,453	
TOTAL PROJECT COST							**$572,717**

Utility relocations are not included in this estimate.

Estimated unit prices were taken from MDOT's average unit price document dated July 7, 2010.

MICHIGAN DEPARTMENT OF TRANSPORTATION

STUDY ESTIMATE OF COST

M-139 (US-12 BR) over the St. Joseph River
B02 of 11021, JN 104152
CS 11021
Niles Twp, Berrien Co, Michigan
Alternate 3B-1
Two 172 Ft Span, Full Height Abutments with Semi-Integral Backwalls, Six 78" Steel Plate Girders
Deck Width is 47.08', Bridge Length is 340'
Deck area (square feet) 16009

	ITEM		QUANTITY	UNIT	UNIT COST	AMOUNT
Substructure						
2050010	Embankment, CIP		164	Cyd	$8.00	$1,312.00
2060002	Backfill, Structure, CIP		5,144	Cyd	$15.00	$77,160.00
2060010	Excavation, Fdn		6,211	Cyd	$13.00	$80,743.00
7040009	Cofferdams, Left in Place (B02 of 11021)		1	LS	$135,600.00	$135,600.00
7050002	Pile Driving Equipment, Furn (B02 of 11021)		1	LS	$7,500.00	$7,500.00
7057001	Pile, Steel, Furn and Driven, 12 inch, LRFD		12,572	Ft	$55.00	$691,460.00
7057050	Test Pile, Steel, 12 inch, LRFD		6	Ea	$1,500.00	$9,000.00
7057050	Test Pile, Furnishing Dynamic Analysis Equipment, LRFD		6	Ea	$1,000.00	$6,000.00
7057050	Test Pile, Dynamic Analysis, LRFD		6	Ea	$2,000.00	$12,000.00
7057051	Pile Driving Equipment, Furn, LRFD (B02 of 11021)		1	LS	$20,000.00	$20,000.00
7060010	Substructure Conc		1,239	Cyd	$375.00	$464,625.00
7060004	Conc, Grade T		296	Cyd	$214.00	$63,344.00
7060025	Conc Surface Coating (B02 of 11021)		1	LS	$6,420.00	$6,420.00
7060028	Substructure Horizontal Surface Sealer (B02 of 11021)		1	LS	$220.00	$220.00
7060035	Reinforcement, Steel, Epoxy Coated		86,760	Lb	$1.10	$95,436.00
7100001	Joint Waterproofing		141	Sft	$5.00	$705.00
8130006	Riprap, Heavy		912	Ton	$80.00	$72,960.00
					SUBTOTAL	$1,744,485.00
Superstructure						
7060031	Expansion Joint Device		110	Ft	$150.00	$16,500.00
7060010	Superstructure Conc		182	Cyd	$375.00	$68,250.00
7060021	Superstructure Conc, Night Casting		600	Cyd	$215.00	$129,000.00
7060022	Superstructure Conc, Form, Finish, and Cure (B02 of 11021)		1	LS	$40,040.00	$40,040.00
7060023	Superstructure Conc, Form, Finish, and Cure, Night Casting (B02 of 11021)		1	LS	$150,000.00	$150,000.00
7060032	False Decking		30,666	Sft	$1.00	$30,666.00
7060035	Reinforcement, Steel, Epoxy Coated		144,517	Lb	$1.10	$158,968.50
7060100	Bridge Ltg, Oper and Maintain		600	Cyd	$2.10	$1,260.00
7060101	Bridge Ltg, Furn and Rem (B02 of 11021)		1	LS	$7,200.00	$7,200.00
7070007	Structural Steel, Plate, Furn and Fab		1,008,000	Lb	$1.45	$1,461,600.00
7070008	Structural Steel, Plate, Erect		1,008,000	Lb	$0.20	$201,600.00
7070080	Shear Developers (B02 of 11021)		1	LS	$16,470.00	$16,470.00
7117001	Bridge Railing, Classic		765	Ft	$125.00	$95,625.00
7160001	Field Repr of Damaged Coating (B02 of 11021)		1	LS	$50,400.00	$50,400.00
					SUBTOTAL	$2,427,580.00
Miscellaneous						
2040020	Structures, Rem		1	LS	$728,410.00	$728,410.00
7060025	Conc Surface Coating (B02 of 11021)		1	LS	$11,579.00	$11,579.00
7067010	Structural Retaining Wall Adjacent to Path (B02 of 11021)		240	Sft	$100.00	$24,000.00
7067051	Bridge Lighting (B02 of 11021)		1	LS	$40,000.00	$40,000.00
7067051	Bridge Deck Drainage System (B02 of 11021)		1	LS	$12,000.00	$12,000.00
					SUBTOTAL	$815,989.00
1040001	Contractor Staking	2%	1	LS	$99,760.00	$99,760.00
1000001	Mobilization	5%	1	LS	$249,400.00	$249,400.00
	Aesthetics	2%				$99,760.00
	Contingencies	20%				$997,610.00
					TOTAL	$6,434,600.00

Prepared by	JRN	Date	12/27/2010	Cost per Sq ft	$402
Checked by	MEP	Date	1/3/2011		

MICHIGAN DEPARTMENT OF TRANSPORTATION

STUDY ESTIMATE OF COST

M-139 (US-12 BR) over the St. Joseph River
B02 of 11021, JN 104152
CS 11021
Niles Twp, Berrien Co, Michigan
Alternate 3B-2
104-134-104 Ft Spans, Full Height Abutments with Semi-Integral Backwalls, Six Prestressed Concrete Michigan 1800 Girders
Deck Width is 47.08', Bridge Length is 340'
Deck area (square feet) 16009

	ITEM		QUANTITY	UNIT	UNIT COST	AMOUNT
Substructure						
2050010	Embankment, CIP		328	Cyd	$8.00	$2,624.00
2060002	Backfill, Structure, CIP		5,246	Cyd	$15.00	$78,690.00
2060010	Excavation, Fdn		6,554	Cyd	$13.00	$85,202.00
7040009	Cofferdams, Left in Place (B02 of 11021)		1	LS	$207,700.00	$207,700.00
7050002	Pile Driving Equipment, Furn (B02 of 11021)		1	LS	$7,500.00	$7,500.00
7057001	Pile, Steel, Furn and Driven, 12 inch, LRFD		12,493	Ft	$55.00	$687,115.00
7057050	Test Pile, Steel, 12 inch, LRFD		8	Ea	$1,500.00	$12,000.00
7057050	Test Pile, Furnishing Dynamic Analysis Equipment, LRFD		8	Ea	$1,000.00	$8,000.00
7057050	Test Pile, Dynamic Analysis, LRFD		8	Ea	$2,000.00	$16,000.00
7057051	Pile Driving Equipment, Furn, LRFD (B02 of 11021)		1	LS	$20,000.00	$20,000.00
7060010	Substructure Conc		1,420	Cyd	$375.00	$532,500.00
7060004	Conc, Grade T		348	Cyd	$214.00	$74,472.00
7060025	Conc Surface Coating (B02 of 11021)		1	LS	$10,300.00	$10,300.00
7060028	Substructure Horizontal Surface Sealer (B02 of 11021)		1	LS	$440.00	$440.00
7060035	Reinforcement, Steel, Epoxy Coated		110,400	Lb	$1.10	$121,440.00
7100001	Joint Waterproofing		141	Sft	$5.00	$705.00
8130006	Riprap, Heavy		1,367	Ton	$80.00	$109,360.00
					SUBTOTAL	$1,974,048.00
Superstructure						
7060010	Superstructure Conc		182	Cyd	$375.00	$68,250.00
7060021	Superstructure Conc, Night Casting		609	Cyd	$215.00	$130,935.00
7060022	Superstructure Conc, Form, Finish, and Cure (B02 of 11021)		1	LS	$40,040.00	$40,040.00
7060023	Superstructure Conc, Form, Finish, and Cure, Night Casting (B02 of 11021)		1	LS	$152,250.00	$152,250.00
7060031	Expansion Joint Device		110	Ft	$150.00	$16,500.00
7060032	False Decking		30,666	Sft	$1.00	$30,666.00
7060035	Reinforcement, Steel, Epoxy Coated		127,515	Lb	$1.10	$140,267.00
7060100	Bridge Ltg, Oper and Maintain		609	Cyd	$2.10	$1,279.00
7060101	Bridge Ltg, Furn and Rem (B02 of 11021)		1	LS	$7,400.00	$7,400.00
7070068	Bearing, Elastomeric, 1 3/4 inch		128	Sft	$100.00	$12,750.00
7080101	Prest Conc 1800 Beam, Furn		2,034	Ft	$200.00	$406,800.00
7080102	Prest Conc 1800 Beam, Erect		2,034	Ft	$30.00	$61,020.00
7117001	Bridge Railing, Classic		765	Ft	$125.00	$95,625.00
					SUBTOTAL	$1,163,782.00
Miscellaneous						
2040020	Structures, Rem		1	LS	$672,378.00	$672,378.00
7060025	Conc Surface Coating (B02 of 11021)		1	LS	$20,276.00	$20,276.00
7067010	Structural Retaining Wall Adjacent to Path (B02 of 11021)		240	Sft	$100.00	$24,000.00
7067051	Bridge Lighting (B02 of 11021)		1	LS	$40,000.00	$40,000.00
7067051	Bridge Deck Drainage System (B02 of 11021)		1	LS	$12,000.00	$12,000.00
					SUBTOTAL	$768,654.00
1040001	Contractor Staking	2%	1	LS	$78,130.00	$78,130.00
1000001	Mobilization	5%	1	LS	$195,320.00	$195,320.00
	Aesthetics	2%				$78,130.00
	Contingencies	20%				$781,300.00
					TOTAL	$5,039,400.00

Prepared by	JRN	Date	12/27/2010	Cost per Sq ft	$315
Checked by	MEP	Date	1/3/2011		

Appendix B

Bridge Drawings

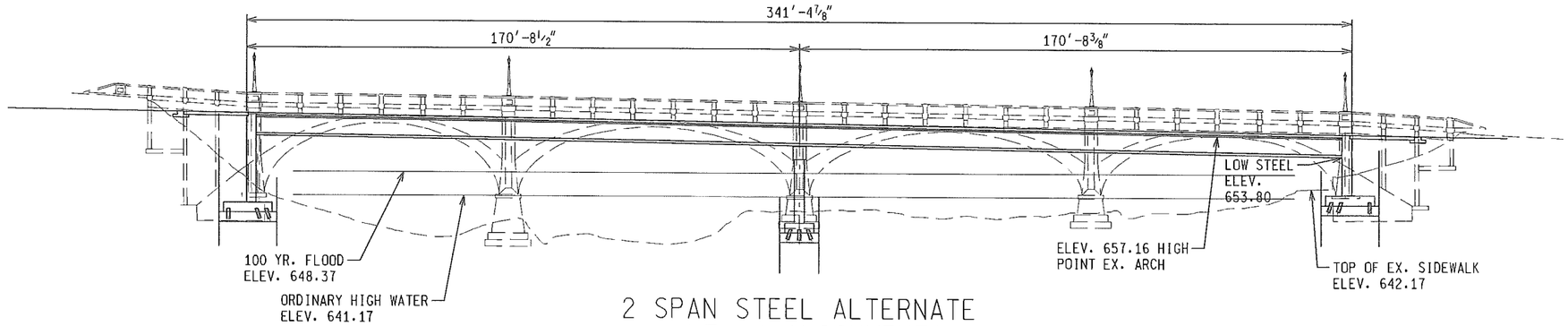

2 SPAN STEEL ALTERNATE
(ALT 3B ALIGNMENT)

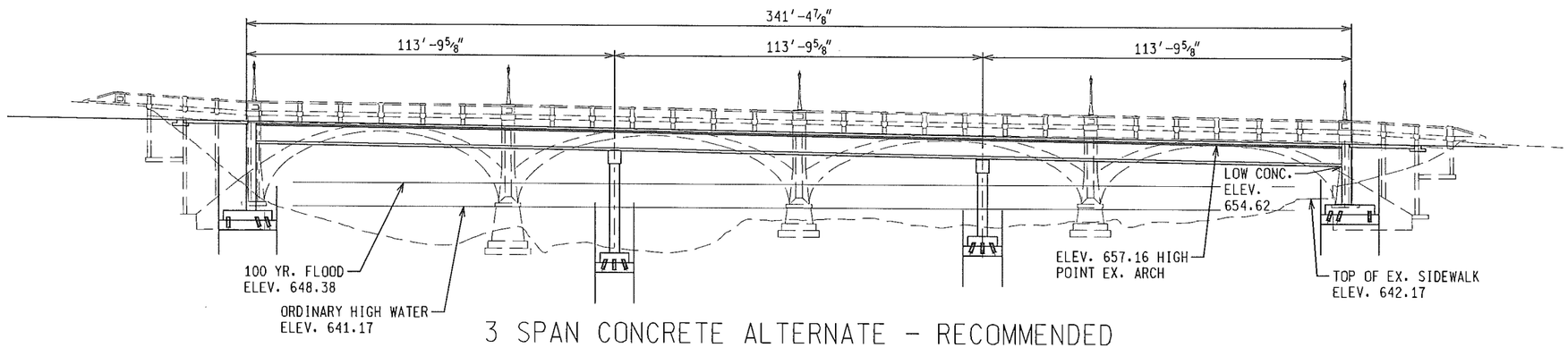

3 SPAN CONCRETE ALTERNATE - RECOMMENDED
(EQUAL SPANS)
(ALT 3B ALIGNMENT)

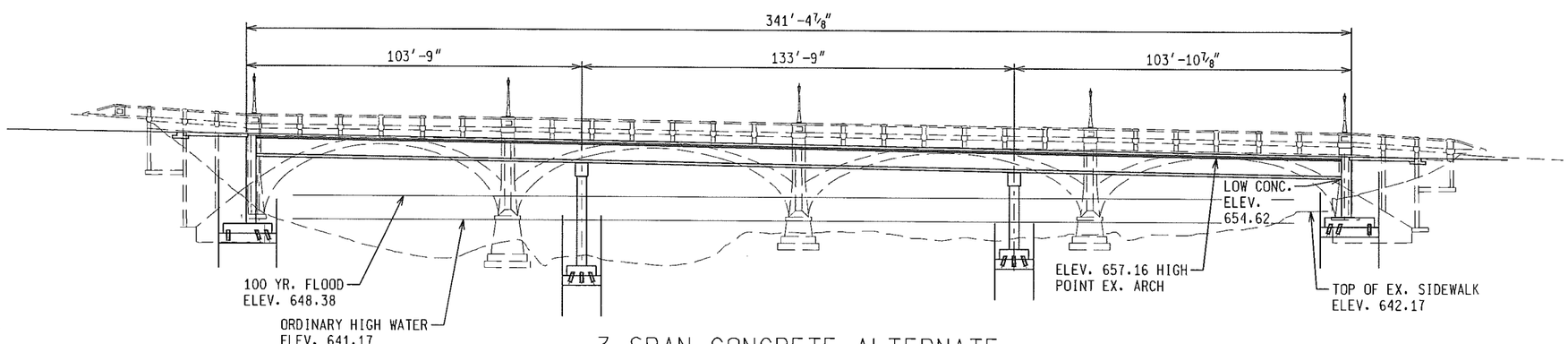

3 SPAN CONCRETE ALTERNATE
(UNEVEN SPANS)
(ALT 3B ALIGNMENT)

REVISIONS			
NO.	DESCRIPTION	DATE	BY

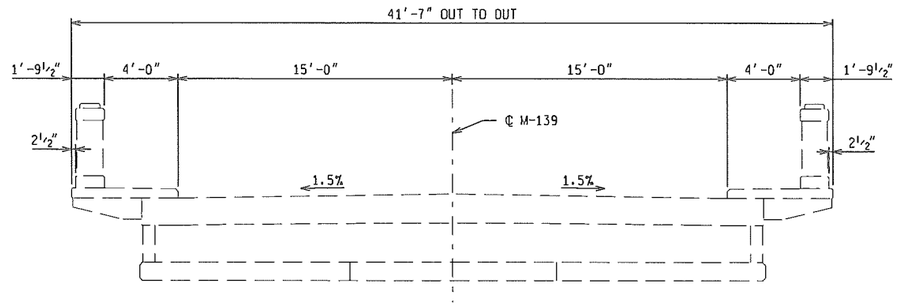

EXISTING CROSS SECTION

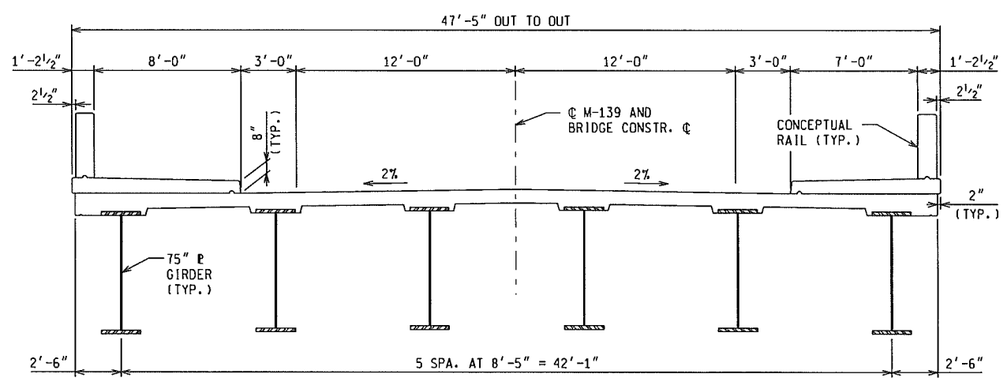

CROSS SECTION
ALTERNATE 1A
(LOOKING WEST)

DATE:
CORRECTED BY:
DATE:
CHECKED BY:
DATE:
DRAWN BY:
FILE NAME:

TranSystems
3100 WEST ROAD SUITE 230
EAST LANSING, MI 48823
(517) 332-3755

MDOT
Michigan Department of Transportation

CROSS SECTIONS - ALTERNATE 1
M-139 OVER THE ST. JOSEPH RIVER

DATE	CONT. SEC.	JOB NO.	DESIGN UNIT	SHEET
6/28/10	B02 OF 11021	104152	FEUERSTEIN	1 OF 4

REVISIONS			
NO.	DESCRIPTION	DATE	BY

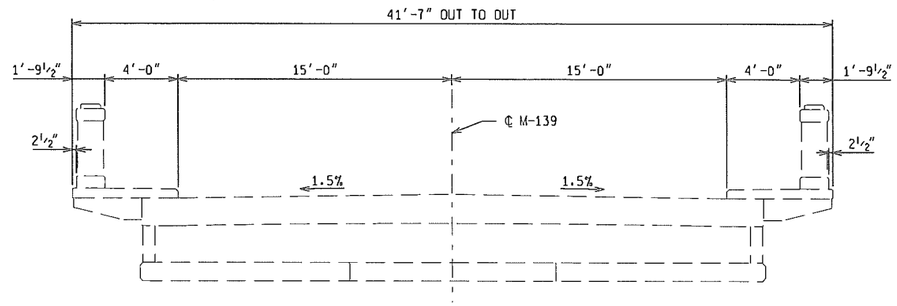

EXISTING CROSS SECTION

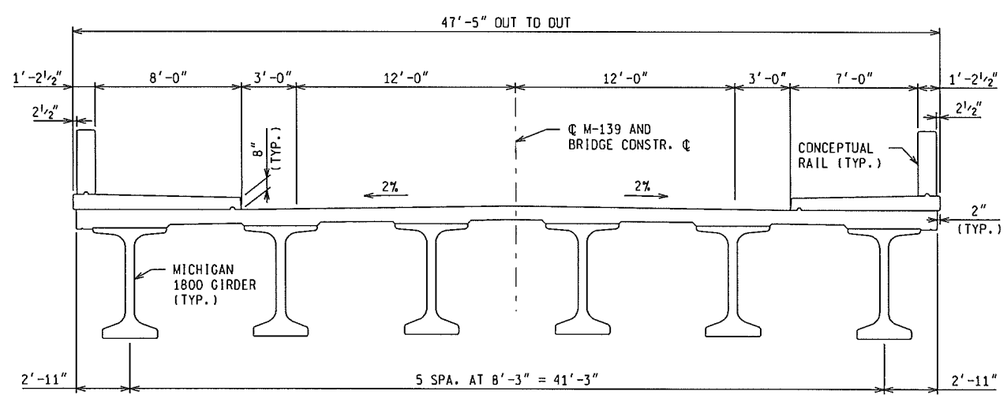

CROSS SECTION
ALTERNATE 2A
(LOOKING WEST)

DATE:
CORRECTED BY:
DATE:
CHECKED BY:
DATE:
DRAWN BY:
FILE NAME:

TranSystems
3100 WEST ROAD SUITE 230
EAST LANSING, MI 48823
(517) 332-3755

MDOT
Michigan Department of Transportation

CROSS SECTIONS - ALTERNATE 2
M-139 OVER THE ST. JOSEPH RIVER

DATE	CONT. SEC.	JOB NO.	DESIGN UNIT	SHEET
6/28/10	B02 OF 11021	104152	FEUERSTEIN	2 OF 4

N
St. Joseph River
St. Joseph River

APPENDIX 9

ROAD IMPROVEMENT COST ESTIMATES

JN:	104152	
CS:	11021	
Estimate by:		Date:
Kurt Manning		March 14, 2011
Checked by:		Date:
Nathan Miller		March 18, 2011
Revised by:		Date:
Kurt Manning		March 28, 2011

PROJECT COST ESTIMATE: Main Street (M-139) Bridge Replacement Alternative 1

Item Section	Quantity	Units	Unit Cost		Section Total:	Total:
2. Earthwork						$10,093
2040005 Curb, Rem	547	Ft	$	5.45	$2,979	
2040011 Pavt, Rem	1289	Syd	$	4.20	$5,415	
2040013 Sidewalk, Rem	309	Syd	$	5.50	$1,700	
3. Bases						$12,099
3010002 Subbase, CIP	776	Cyd	$	8.20	$6,360	
3020016 Aggregate Base, 6 inch	1400	Syd	$	4.10	$5,739	
5. HMA Pavements & Surface Treatments						$20,836
5020044 HMA, 3E1	180	Ton	$	55.00	$9,879	
5020050 HMA, 4E1	120	Ton	$	51.00	$6,107	
5020056 HMA, 5E1	90	Ton	$	54.00	$4,850	
6. Portland Cement Concrete Pavement						$6,965
6020076 Conc Pavt, Misc, Reinf, 9 inch	129	Syd	$	54.00	$6,965	
7. Structures						$498,023
7067010 Structural Retaining Wall	4980	Sft	$	100.00	$498,023	
8. Incidental Construction						$19,825
8020010 Curb and Gutter, Bridge Approach	80	Ft	$	28.00	$2,245	
8020038 Curb and Gutter, Conc, Det F4	458	Ft	$	12.00	$5,501	
8030003 Sidewalk, Conc, 6 inch	3693	Sft	$	3.00	$11,079	
8507012 ROW purchases	0.1	Acre	$	10,000.00	$1,000	
SUB-TOTAL:						**$567,841**
Miscellaneous						
Maintenance of Traffic				3%	$17,035.24	
Earthwork (incl. Embankment, CIP and Excavation, Earth)				4%	$22,713.65	
Pavement Markings				1%	$5,678.41	
Drainage				5%	$28,392.07	
Erosion Control				1%	$5,678.41	
Bikepath Work				5%	$28,392.07	
Aesthetics/Landscaping				3%	$17,035.24	
Structures, Rem				5%	$28,392.07	
SUB-TOTAL:						**$721,159**
Project Cleanup					$1,900	
Minor Traf Devices					$9,100	
Contractor Staking, Road Only					$14,700	
Mobilization, Max. ____					$37,500	
Contingencies				20%	$156,872	
TOTAL PROJECT COST						**$941,230**

Bridge work and utility relocations are not included in this estimate.

Estimated unit prices were taken from MDOT's average unit price document dated July 7, 2010.

JN:	104152	
CS:	11021	
Estimate by:		Date:
Kurt Manning		March 14, 2011
Checked by:		Date:
Nathan Miller		March 18, 2011
Revised by:		Date:
Kurt Manning		March 28, 2011

PROJECT COST ESTIMATE: Main Street (M-139) Bridge Replacement Alternative 2

Item Section	Quantity	Units	Unit Cost	Section Total:	Total:
2. Earthwork					$18,953
2040005 Curb, Rem	872	Ft	$ 5.45	$4,754	
2040011 Pavt, Rem	2304	Syd	$ 4.20	$9,678	
2040013 Sidewalk, Rem	822	Syd	$ 5.50	$4,521	
3. Bases					$19,275
3010002 Subbase, CIP	1251	Cyd	$ 8.20	$10,256	
3020016 Aggregate Base, 6 inch	2200	Syd	$ 4.10	$9,019	
5. HMA Pavements & Surface Treatments					$34,001
5020044 HMA, 3E1	293	Ton	$ 55.00	$16,121	
5020050 HMA, 4E1	195	Ton	$ 51.00	$9,966	
5020056 HMA, 5E1	147	Ton	$ 54.00	$7,914	
6. Portland Cement Concrete Pavement					$6,439
6020076 Conc Pavt, Misc, Reinf, 9 inch	119	Syd	$ 54.00	$6,439	
7. Structures					$309,252
7067010 Structural Retaining Wall	3093	Sft	$ 100.00	$309,252	
8. Incidental Construction					$39,309
8020010 Curb and Gutter, Bridge Approach	80	Ft	$ 28.00	$2,240	
8020038 Curb and Gutter, Conc, Det F4	775	Ft	$ 12.00	$9,306	
8020050 Driveway Opening, Conc, Det M	67	Ft	$ 13.00	$866	
8030003 Sidewalk, Conc, 6 inch	8632	Sft	$ 3.00	$25,897	
8507012 ROW purchases	0.10	Acre	$ 10,000.00	$1,000	
SUB-TOTAL:					**$427,228**
Miscellaneous					
Maintenance of Traffic			3%	$12,816.85	
Earthwork (incl. Embankment, CIP and Excavation, Earth)			4%	$17,089.13	
Pavement Markings			1%	$4,272.28	
Drainage			5%	$21,361.41	
Erosion Control			1%	$4,272.28	
Bikepath Work			5%	$21,361.41	
Aesthetics/Landscaping			3%	$12,816.85	
Structures, Rem			5%	$21,361.41	
SUB-TOTAL:					**$542,580**
Project Cleanup				$1,400	
Minor Traf Devices				$6,800	
Contractor Staking, Road Only				$11,100	
Mobilization, Max. ____				$28,200	
Contingencies			20%	$118,016	
TOTAL PROJECT COST					**$708,096**

Bridge work and utility relocations are not included in this estimate.

Estimated unit prices were taken from MDOT's average unit price document dated July 7, 2010.

JN:	104152	
CS:	11021	
Estimate by:		Date:
Kurt Manning		March 14, 2011
Checked by:		Date:
Nathan Miller		March 18, 2011
Revised by:		Date:
Kurt Manning		March 28, 2011

PROJECT COST ESTIMATE: Main Street (M-139) Bridge Replacement Alternative 3

Item Section	Quantity	Units	Unit Cost	Section Total:	Total:
2. Earthwork					$26,079
2040005 Curb, Rem	1420	Ft	$ 5.45	$7,739	
2040011 Pavt, Rem	3160	Syd	$ 4.20	$13,271	
2040013 Sidewalk, Rem	922	Syd	$ 5.50	$5,070	
3. Bases					$22,404
3010002 Subbase, CIP	1632	Cyd	$ 8.20	$13,385	
3020016 Aggregate Base, 6 inch	2200	Syd	$ 4.10	$9,019	
5. HMA Pavements & Surface Treatments					$43,726
5020044 HMA, 3E1	377	Ton	$ 55.00	$20,732	
5020050 HMA, 4E1	251	Ton	$ 51.00	$12,816	
5020056 HMA, 5E1	188	Ton	$ 54.00	$10,178	
6. Portland Cement Concrete Pavement					$6,295
6020076 Conc Pavt, Misc, Reinf, 9 inch	117	Syd	$ 54.00	$6,295	
7. Structures					$352,808
7067010 Structural Retaining Wall	3528	Sft	$ 100.00	$352,808	
8. Incidental Construction					$54,764
8020010 Curb and Gutter, Bridge Approach	80	Ft	$ 28.00	$2,240	
8020038 Curb and Gutter, Conc, Det F4	1251	Ft	$ 12.00	$15,009	
8020050 Driveway Opening, Conc, Det M	66	Ft	$ 13.00	$863	
8030003 Sidewalk, Conc, 6 inch	11550	Sft	$ 3.00	$34,651	
8507012 ROW purchases	0.2	Acre	$ 10,000.00	$2,000	
SUB-TOTAL:					**$506,075**
Miscellaneous					
Maintenance of Traffic			3%	$15,182.25	
Earthwork (incl. Embankment, CIP and Excavation, Earth)			4%	$20,243.00	
Pavement Markings			1%	$5,060.75	
Drainage			5%	$25,303.75	
Erosion Control			1%	$5,060.75	
Bikepath Work			5%	$25,303.75	
Aesthetics/Landscaping			3%	$15,182.25	
Structures, Rem			5%	$25,303.75	
SUB-TOTAL:					**$642,715**
Project Cleanup				$1,700	
Minor Traf Devices				$8,100	
Contractor Staking, Road Only				$13,100	
Mobilization, Max. ____				$33,400	
Contingencies			20%	$139,803	
TOTAL PROJECT COST					**$838,818**

Bridge work and utility relocations are not included in this estimate.

Estimated unit prices were taken from MDOT's average unit price document dated July 7, 2010.

JN:	104152	
CS:	11021	
Estimate by:		Date:
Kurt Manning		March 14, 2011
Checked by:		Date:
Nathan Miller		March 18, 2011
Revised by:		Date:
Kurt Manning		March 28, 2011

PROJECT COST ESTIMATE: Main Street (M-139) Bridge Replacement Alternative 3A

Item Section	Quantity	Units	Unit Cost	Section Total:	Total:
2. Earthwork					$25,353
2040005 Curb, Rem	1306	Ft	$ 5.45	$7,120	
2040011 Pavt, Rem	3026	Syd	$ 4.20	$12,711	
2040013 Sidewalk, Rem	1004	Syd	$ 5.50	$5,522	
3. Bases					$27,179
3010002 Subbase, CIP	1953	Cyd	$ 8.20	$16,017	
3020016 Aggregate Base, 6 inch	2722	Syd	$ 4.10	$11,162	
5. HMA Pavements & Surface Treatments					$41,781
5020044 HMA, 3E1	360	Ton	$ 55.00	$19,810	
5020050 HMA, 4E1	240	Ton	$ 51.00	$12,246	
5020056 HMA, 5E1	180	Ton	$ 54.00	$9,725	
6. Portland Cement Concrete Pavement					$6,506
6020076 Conc Pavt, Misc, Reinf, 9 inch	120	Syd	$ 54.00	$6,506	
7. Structures					$275,986
7067010 Structural Retaining Wall	2760	Sft	$ 100.00	$275,986	
8. Incidental Construction					$46,237
8020010 Curb and Gutter, Bridge Approach	80	Ft	$ 28.00	$2,240	
8020038 Curb and Gutter, Conc, Det F4	1091	Ft	$ 12.00	$13,089	
8020050 Driveway Opening, Conc, Det M	125	Ft	$ 13.00	$1,631	
8030003 Sidewalk, Conc, 6 inch	9426	Sft	$ 3.00	$28,277	
8507012 ROW purchases	0.1	Acre	$ 10,000.00	$1,000	
	0	0	$ -	$0	
SUB-TOTAL:					**$423,042**
Miscellaneous					
Maintenance of Traffic			3%	$12,691.25	
Earthwork (incl. Embankment, CIP and Excavation, Earth)			4%	$16,921.66	
Pavement Markings			1%	$4,230.42	
Drainage			5%	$21,152.08	
Erosion Control			1%	$4,230.42	
Bikepath Work			5%	$21,152.08	
Aesthetics/Landscaping			3%	$12,691.25	
Structures, Rem			5%	$21,152.08	
SUB-TOTAL:					**$537,263**
Project Cleanup				$1,400	
Minor Traf Devices				$6,800	
Contractor Staking, Road Only				$11,000	
Mobilization, Max. ____				$27,900	
Contingencies				$116,873	
TOTAL PROJECT COST					**$701,235**

Bridge work and utility relocations are not included in this estimate.

Estimated unit prices were taken from MDOT's average unit price document dated July 7, 2010.

JN:	104152	
CS:	11021	
Estimate by:		Date:
Kurt Manning		March 14, 2011
Checked by:		Date:
Nathan Miller		March 18, 2011
Revised by:		Date:
Kurt Manning		March 28, 2011

PROJECT COST ESTIMATE: Main Street (M-139) Bridge Replacement Preferred Alternative 3B

Item Section	Quantity	Units	Unit Cost		Section Total:	Total:
2. Earthwork						$52,631
2040005 Curb, Rem	1177	Ft	$	5.45	$6,413	
2040011 Pavt, Rem	2798	Syd	$	4.20	$11,752	
2040013 Sidewalk, Rem	846	Syd	$	5.50	$4,654	
2050010 Embankment, CIP	8518	Cyd	$	3.50	$29,812	
2050016 Excavation, Earth	2457	Cyd	$	4.00	$9,826	
3. Bases						$26,320
3010002 Subbase, CIP	1874	Cyd	$	8.20	$15,363	
3020016 Aggregate Base, 6 inch	2673	Syd	$	4.10	$10,958	
5. HMA Pavements & Surface Treatments						$41,974
5020044 HMA, 3E1	362	Ton	$	55.00	$19,901	
5020050 HMA, 4E1	241	Ton	$	51.00	$12,303	
5020056 HMA, 5E1	181	Ton	$	54.00	$9,770	
6. Portland Cement Concrete Pavement						$7,424
6020076 Conc Pavt, Misc, Reinf, 9 inch	137	Syd	$	54.00	$7,424	
7. Structures						$328,128
7067010 Structural Retaining Wall	3281	Sft	$	100.00	$328,128	
8. Incidental Construction						$42,226
8020010 Curb and Gutter, Bridge Approach	80	Ft	$	28.00	$2,241	
8020021 Curb and Gutter, Conc, Det C2	584	Ft	$	11.50	$6,711	
8020023 Curb and Gutter, Conc, Det C4	422	Ft	$	12.50	$5,270	
8020050 Driveway Opening, Conc, Det M	68	Ft	$	13.00	$889	
8030003 Sidewalk, Conc, 6 inch	8705	Sft	$	3.00	$26,116	
8507012 ROW purchases	0.1	Acre	$	10,000.00	$1,000	
SUB-TOTAL:						**$498,704**
Miscellaneous						
Maintenance of Traffic				3%	$14,066.75	
Pavement Markings				1%	$4,688.92	
Drainage				5%	$23,444.58	
Erosion Control				1%	$4,688.92	
Bikepath Work				5%	$23,444.58	
Aesthetics/Landscaping				3%	$14,066.75	
Structures, Rem				5%	$23,444.58	
SUB-TOTAL:						**$606,549**
Project Cleanup					$1,500	
Minor Traf Devices					$7,500	
Contractor Staking, Road Only					$12,100	
Mobilization, Max. ____					$30,900	
Contingencies					$129,498	
TOTAL PROJECT COST						**$788,047**

Bridge work and utility relocations are not included in this estimate.

Estimated unit prices were taken from MDOT's average unit price document dated July 7, 2010.

JN:	104152		
CS:	11021		
Estimate by:		Date:	
Kurt Manning		March 14, 2011	
Checked by:		Date:	
Nathan Miller		March 18, 2011	
Revised by:		Date:	
Kurt Manning		March 28, 2011	

PROJECT COST ESTIMATE: Main Street (M-139) Bridge Replacement Alternative 4

Item Section	Quantity	Units	Unit Cost	Section Total:	Total:
2. Earthwork					$28,182
2040005 Curb, Rem	1498	Ft	$ 5.45	$8,162	
2040011 Pavt, Rem	3320	Syd	$ 4.20	$13,943	
2040013 Sidewalk, Rem	1105	Syd	$ 5.50	$6,077	
3. Bases					$30,471
3010002 Subbase, CIP	2151	Cyd	$ 8.20	$17,641	
3020016 Aggregate Base, 6 inch	3129	Syd	$ 4.10	$12,829	
5. HMA Pavements & Surface Treatments					$39,065
5020044 HMA, 3E1	337	Ton	$ 55.00	$18,522	
5020050 HMA, 4E1	225	Ton	$ 51.00	$11,450	
5020056 HMA, 5E1	168	Ton	$ 54.00	$9,093	
6. Portland Cement Concrete Pavement					$8,693
6020076 Conc Pavt, Misc, Reinf, 9 inch	161	Syd	$ 54.00	$8,693	
7. Structures					$314,488
7067010 Structural Retaining Wall	3145	Sft	$ 100.00	$314,488	
8. Incidental Construction					$49,898
8020010 Curb and Gutter, Bridge Approach	60	Ft	$ 28.00	$1,680	
8020038 Curb and Gutter, Conc, Det F4	1384	Ft	$ 12.00	$16,606	
8020050 Driveway Opening, Conc, Det M	77	Ft	$ 13.00	$1,005	
8030003 Sidewalk, Conc, 6 inch	9535	Sft	$ 3.00	$28,606	
8507012 ROW purchases	0.2	Acre	$ 10,000.00	$2,000	
SUB-TOTAL:					**$470,797**
Miscellaneous					
Maintenance of Traffic			3%	$14,123.91	
Earthwork (incl. Embankment, CIP and Excavation, Earth)			4%	$18,831.88	
Pavement Markings			1%	$4,707.97	
Drainage			5%	$23,539.86	
Erosion Control			1%	$4,707.97	
Bikepath Work			5%	$23,539.86	
Aesthetics/Landscaping			3%	$14,123.91	
Structures, Rem			5%	$23,539.86	
SUB-TOTAL:					**$597,912**
Project Cleanup				$1,500	
Minor Traf Devices				$7,500	
Contractor Staking, Road Only				$12,200	
Mobilization, Max. ____				$31,100	
Contingencies				$130,042	
TOTAL PROJECT COST					**$780,255**

Bridge work and utility relocations are not included in this estimate.

Estimated unit prices were taken from MDOT's average unit price document dated July 7, 2010.