Road & Bridge Design Publications

Monthly Update – January 2012

Revisions for the month of **January** are listed and displayed below. The special detail index for December will remain in effect. Please contact Wayne Pikka (pikkaw@michigan.gov) for any questions related to the road changes or Vladimir Zokvic (zokvicv@michigan.gov) for questions related to the bridge changes.

Standard Plans

R-52-Series: Temporary Concrete Barrier: Per the 2012 spec book (Section 922.04), RDM 7.01.67 (section will be updated next month), and former FUSP 812(G), this standard plan has been eliminated. (Note: A replacement sheet, which enables the removal of R-52-series, has been provided for those who would like to keep their standard plan booklet up to date.)

Road Design Manual

3.03B: Vertical Alignment: A minor wording change was made in regards to the location of a unit in an MDOT Division.

6.03.04B6: Removing HMA Surface: A table was revised and a paragraph eliminated to comply with the 2012 Standard Specifications for Construction. The parameters for the thickness of HMA cap removal, which qualify work to be paid for as either "PAVT, REM" or "HMA SURFACE, REM", were revised.

6.06.12: Curb & Gutter Reinforcement: A minor wording change added the term "shoulder" to the other features which can be located adjacent to curb & gutter.

6.06.13: Curb & Gutter Removal: The sketches in this section were revised based on the HMA thickness parameter changes mentioned in 6.03.04B6 above.

Bridge Design Manual

8.09.04 E. (LRFD & LFD) - Additional coating material shall be included in pay items for uncoated A588 structural steel.

Road & Bridge Design Publications

Monthly Update – January 2012

Bridge Design Guides

8.21.02 - Updated weld sizes for various HP pile sizes. Piles not listed need approval on weld size from MDOT Construction Field Services Geotechnical Section and Bridge Field Services Section. Note added not allowing alternate splice sleeve with integral abutments; use full penetration butt weld details with integral abutments (see BDG 8.21.02 A).

8.21.02 A - Revised decimals to fractions and added HP sections.

Please note: Corresponding updates to automated tools, including but not limited to the MDOT Bulletin Board, MDOT Cell Library, Bridge Auto Draw Program, etc., may be required in tandem with some of this month's updates. Until such updates to automated tools can be made, it is the designer's/detailer's responsibility to manually incorporate any necessary revisions to notes and plan details to reflect these revisions.

A BAR

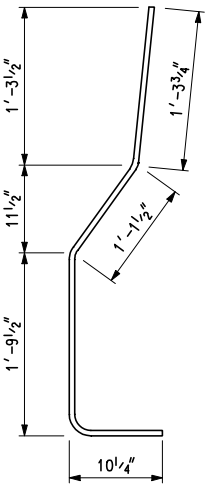

Z BAR

STEEL REINFORCEMENT (EPOXY COATED)									
TYPE C					TYPE D				
BAR	BAR SIZE	LENGTH	NUMBER REQUIRED	WEIGHT (LBS)	BAR	BAR SIZE	LENGTH	NUMBER REQUIRED	WEIGHT (LBS)
A1	#4	17'-6"	14	164	A1	#4	21'-6"	14	201
A2	#4	9'-2"	28	172	A2	#4	9'-2"	32	208
A3	#4	17'-6"	6	70	A3	#4	21'-6"	6	86
Z	#4	5'-1"	28	95	Z	#4	5'-1"	32	115
TOTAL WEIGHT OF STEEL = 501 LBS					TOTAL WEIGHT OF STEEL = 610 LBS				

CONCRETE QUANTITIES				
SIGN SUPPORT FOUNDATION TYPE	TAPERED SECTION (BOTH ENDS) (CYD)	* SIGN SUPPORT SECTION (CYD)	SIGN SUPPORT FOOTING (CYD)	TOTAL (CYD)
C	12.3	7.2	7.8	27.3
D	12.3	8.8	9.5	30.6

* QUANTITY IS TO BOTTOM OF VALLEY GUTTER

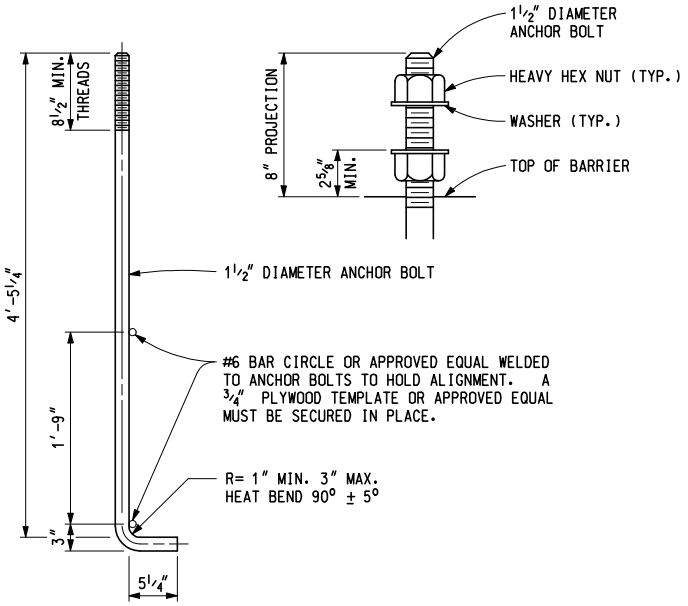

ANCHOR BOLTS, NUTS, AND WASHERS SHALL BE ACCORDING TO THE CURRENT STANDARD SPECIFICATIONS.

ANCHOR BOLT DETAIL

NOTES:

THE SIDE CONFIGURATION SPECIFIED ON THIS PLAN CONFORMS TO THE "NEW JERSEY" SHAPE.

ALL EXPOSED EDGES ON THE BARRIER SHALL HAVE A ½" BEVEL OR 1" RADIUS.

NUTS, WASHERS, AND ANCHOR BOLTS SHALL BE GALVANIZED ACCORDING TO THE CURRENT STANDARD SPECIFICATIONS.

ANCHOR BOLTS SHALL BE CAREFULLY SET AND HELD VERTICAL AT THE CORRECT LOCATION AND AT THE PROPER ELEVATION WITH ¾" PLYWOOD (OR APPROVED EQUAL) TEMPLATE UNTIL CONCRETE IS SET. EACH SET OF FOUR BOLTS SHALL BE TIED TOGETHER BY WELDING INTO A BASKET WITH #6 BAR CIRCLES (OR APPROVED EQUAL) ALONG WITH SECURING A ¾" PLYWOOD (OR APPROVED EQUAL) TEMPLATE IN PLACE PRIOR TO BEING APPROVED FOR SHIPPING (SEE ANCHOR BOLT DETAIL).

SIGN SUPPORT FOUNDATION INCLUDES THE TAPERED SECTION ON BOTH ENDS WITH THE 1" EXPANSION JOINTS USED TO GAP FOR STRUCTURES BEING PLACED AS SPECIFIED ON THIS PLAN.

MODIFICATIONS TO THE CONCRETE VALLEY GUTTER AND LOCATION OF THE CONCRETE GLARE SCREEN USED IN CONJUNCTION WITH THE SIGN SUPPORT FOUNDATION SHALL BE CONSTRUCTED AS DETAILED ON THIS PLAN, AND INCLUDED IN THEIR RESPECTIVE ITEMS AND PAID FOR AT THE CONTRACT UNIT PRICE PER LINEAR FEET, WHICH INCLUDES PAYMENT IN FULL FOR ALL WORK AND MATERIALS.

WORK THIS STANDARD WITH STANDARD PLAN R-49-SERIES AND WHEN APPLICABLE R-33-SERIES AND R-76-SERIES.

MICHIGAN DEPARTMENT OF TRANSPORTATION
BUREAU OF HIGHWAY DEVELOPMENT STANDARD PLAN FOR

SIGN SUPPORT FOUNDATION
(CONCRETE BARRIER, DOUBLE FACE)

11-14-2003 F.H.W.A. APPROVAL	10-28-2002 PLAN DATE	R-51-D	SHEET 3 OF 3

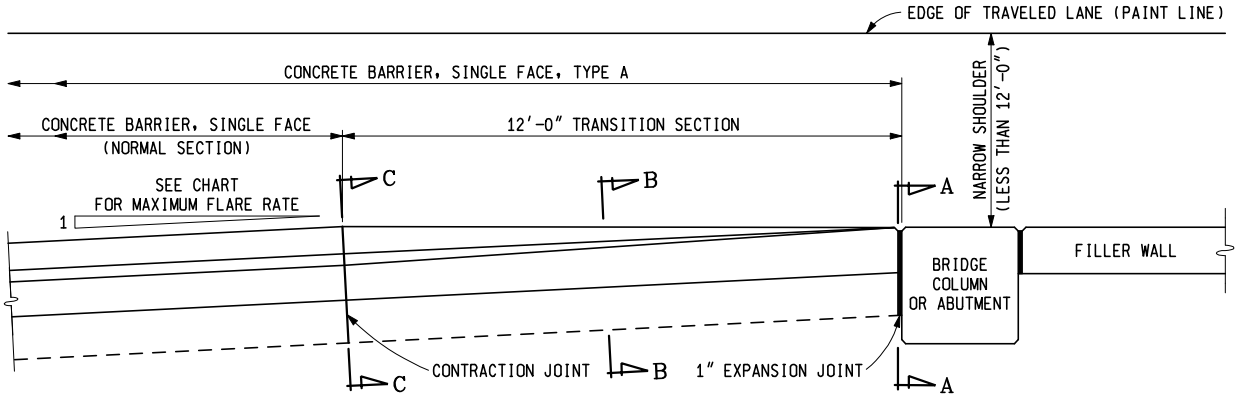

CONCRETE BARRIER, SINGLE FACE
(AT SQUARE COLUMN OR ABUTMENT)

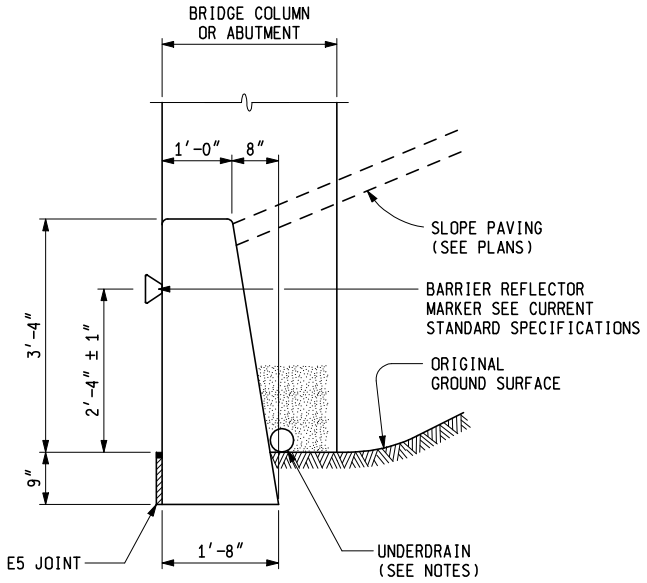

SECTION A - A

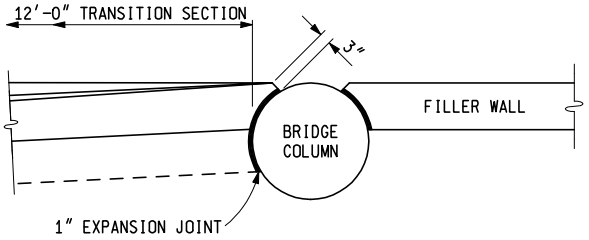

CONCRETE BARRIER, SINGLE FACE
(AT CIRCULAR COLUMN)

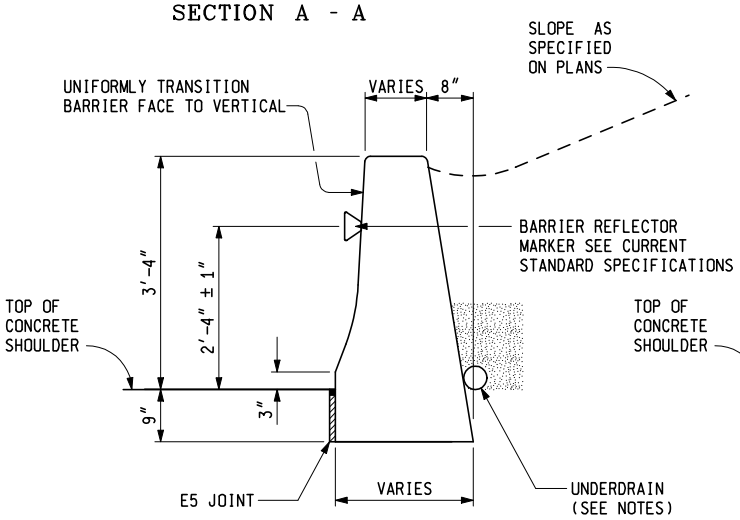

SECTION B - B

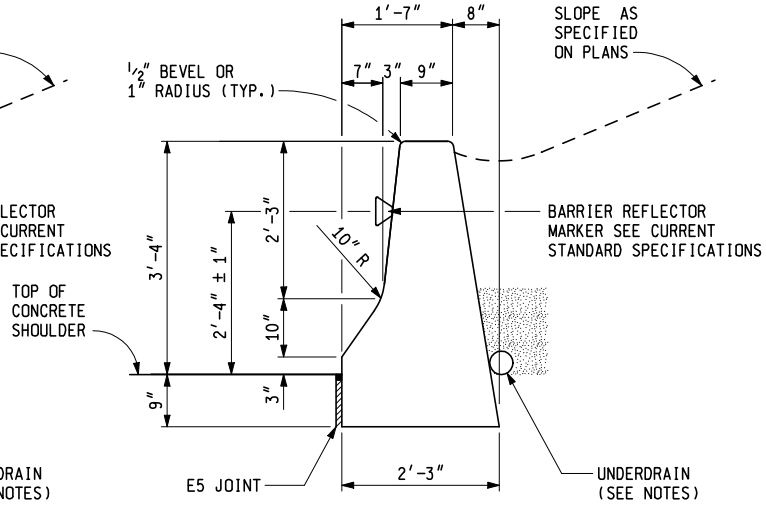

SECTION C - C

CONCRETE BARRIER, SINGLE FACE, TYPE A
(IN LINE WITH BRIDGE COLUMNS OR ABUTMENT)

MDOT Michigan Department of Transportation PREPARED BY DESIGN DIVISION DRAWN BY: B.L.T. CHECKED BY: W.K.P.	DEPARTMENT DIRECTOR Kirk T. Steudle APPROVED BY: John C. Friend ENGINEER OF DELIVERY APPROVED BY: Joel S. Pollard ENGINEER OF DEVELOPMENT	MICHIGAN DEPARTMENT OF TRANSPORTATION BUREAU OF HIGHWAY DEVELOPMENT STANDARD PLAN FOR CONCRETE BARRIER, SINGLE FACE

10-21-2008	10-16-2007	R-54-G	SHEET
F.H.W.A. APPROVAL	PLAN DATE		1 OF 4

3.03 (revised 1-23-2012)

ALIGNMENT-GENERAL

The geometric design of a roadway consists of horizontal alignment, vertical alignment, and a combination of the two. A properly designed alignment (horizontal and vertical) leads to the safe and efficient movement of traffic.

A. Horizontal Alignment

Horizontal alignment is a major factor in determining safety, driving comfort, and capacity of a highway.

Some important factors to consider when designing for horizontal alignment:

1. Passing sight distance on two-lane, two-way roadways should be maximized.

2. Curves should be as flat as physical conditions permit. Abrupt changes in alignment introduce the element of surprise to the driver and should be avoided.

3. Broken back curves should be avoided because they are unsightly and drivers do not expect succeeding curves to be in the same direction.

4. If possible, the minimum distance between reverse curves should be the sum of the superelevation transitions, outside the curves, plus the crown runout lengths. The crown runout can be eliminated in some situations. See the Geometrics Unit (Design Division) for additional guidance. When it isn't possible to obtain the desired distance between reverse curves, up to 40% of the transition may be placed in the curves.

3.03 (continued)

B. Vertical Alignment

Vertical alignment establishes the profile grade of a proposed road construction project. The grade can be over virgin land as in the case of a relocation project or along an existing roadway, as in the case of a resurfacing project. In either case and in most proposed construction projects, a profile grade should be established.

Obviously a profile grade must always be established for new construction or relocation projects. Most reconstruction and rehabilitation projects will require new profile grades if improvements for sight distance, superelevation, and drainage are included. A simple resurfacing project can usually be constructed without establishing a new vertical alignment.

Establishing the vertical alignment is based on many factors, including terrain, existing conditions, soils, drainage, coordination with the horizontal alignment, location of bridges, culverts, crossroads, design speed, earthwork balance, etc. The Designer must work with available resources such as the Geometrics Unit of the Design Division to provide the best possible vertical alignment. The final product should be safe, functional, aesthetically pleasing, and economical.

6.03.03

Philosophy of the Use of HMA Surfacing

Both the HMA and portland cement concrete industries are vital parts of Michigan's economy. The Department therefore endeavors to make impartial use of both materials. Because of its adaptability to the maintenance of traffic, needing only to cool before traffic can be allowed on it, asphalt is the common type of resurfacing in use. It is also used rather extensively as the pavement type on new construction in the areas of the state having granular soils.

The purpose of resurfacing is to extend the useful life of a pavement for a given length of time, usually for a period of 8 to 12 years, but sometimes for as little as 3 to 5 years. If no design life is specified when a resurfacing project is assigned, assume it to be 10 years. In some situations a shorter design life may be desired.

6.03.04 (revised 1-23-2012)

Surface Preparation

A. Conditioning Aggregate Base / Surface

When existing aggregate base/surface remains in place see Section 6.02.09D.

6.03.04 (continued)

B. Concrete or Composite (HMA on Concrete) Pavement

1. Crown and Superelevation Modification

Current methods for modifying pavement crown and superelevation are expensive and need careful consideration. Many resurfacing projects call for modifying the crown from the former parabolic configuration to the current 2% cross-slope and/or upgrading pavement superelevation. Modification of pavement slope is typically accomplished by wedging with HMA and/or cold-milling. The need for modification will be based on a safety analysis and applicable design standards. Crown modification may include changing the shape, changing the rate of the cross slope, adjusting the crown point location or a combination of the three. Existing pavement slope(s) should be thoroughly reviewed during the project design (including cross-sectioning where applicable) to minimize construction problems and cost overruns.

2. Cleaning Pavement

The ***Standard Specifications for Construction*** state that the pavement surface must be clean prior to resurfacing. Some designers have purposely omitted the item when milling is done on the assumption that sweeping after the milling accomplishes the desired result. The fallacy with this is that several weeks can elapse between milling and resurfacing, giving the pavement time for dirt to be tracked upon it once more. The pay item "Pavt, Cleaning", measured as a lump sum, should therefore be included in all resurfacing projects. It can be deleted during construction if for some reason it is not needed.

6.03.04B5 (continued)

Surface Preparation

a variety of equipment. Although a minimum 12" of width may be removed by milling, for practical purposes provide a minimum of half a lane width when reclaiming a curb face covered by previous resurfacing.

About 1½" depth is the minimum that can be cold milled economically. (Lesser depths can obviously be removed, for reasons other than economy.)

Any hand work required when removing HMA surface around catch basins, manholes, or SCANDI loops should not be paid for separately, but noted as included in payment for "Cold Milling HMA Surface". This should be clearly stated on the plans or in the proposal.

Occasionally, when requested by Construction, stringline control may be called for in conjunction with cold-milling. This is not feasible where only 1" or 1½" is being removed, however, as there simply is not enough latitude available for grade adjustment. "Cold Milling HMA Surface" may be measured by either square yard or by the ton. The unit to use will usually be determined at the Plan Review Meeting.

6.03.04B5 (continued)

Where there will be varying cold milling depths use tons. When square yards are used, the thickness of HMA surfacing to be removed must be clearly indicated on the plans or in the log. Cores should be taken prior to construction (one every 1000 ft. per lane) to verify the thickness to be milled and the condition of the underlying material.

When a milling machine is used to construct a butt joint to receive the full depth of all resurfacing courses, the butt joint should be included in the payment for Cold Milling. When the depth of milling is reduced to less than the full resurfacing depth at the joint, it should be paid for as Pavt for Butt Joints, Rem. Butt joints for driveway approach removal should also be paid for as Pavt for Butt Joints, Rem. The butt joint should be detailed on the plans showing either full or reduced removal depth against the existing pavement and indicating the appropriate pay item.

6. Removing HMA Surface

The table below summarizes the applications for the pay items "Pavt, Rem" and "HMA Surface, Rem":

Thickness of HMA cap to be removed	Underlying Pavement is:	Pay item for removing HMA surface
12" or less	Either removed or left-in-place	HMA Surface, Rem Square Yard
More than 12"	Either removed or left-in-place	Pavt, Rem Square Yard

6.03.04B6 (continued)

Surface Preparation

There are a number of methods for removing HMA surface:

a. Motor grader with ripper teeth

Suitable for HMA over aggregate. Largely obsolete for removing an HMA surface from underlying concrete.

b. Jackhammer

Being labor intensive, only suitable for small areas such as preparing a butt joint.

c. Front end loader

Suitable for removing an HMA surface from underlying concrete. On recycling projects the material is processed through an aggregate crushing plant.

d. Cold-milling Machine

Fastest, most modern method for removing an HMA surface over a pavement that is to be left in place. The machines are relatively expensive, however, which may put them beyond the means of small contractors.

6.03.04B6 (continued)

e. Heater-planer

By softening the material with either direct or indirect flame, volume production is possible. This method tends to be energy-inefficient and environmentally objectionable, if smoke is not controlled. Not many large machines are located in this part of the country. A heat-planer may cause damage to the material, if it is to be recycled (direct flame can burn asphalt to ash).

7. Removing HMA Patches

Existing surface patches (not full-depth patches) may need to be removed prior to resurfacing. Generally, they are composed of cold patch material placed by maintenance forces. Cold patch is likely to be rich in bitumen, which tends to bleed through the hot resurfacing causing an asphalt-rich spot that can be weak and lacking in surface texture. Some of the cold patch materials do not need to be removed because they are not sensitive to heat. The pay item is “HMA Patch, Rem” measured by the square yard.

8. Joint and Crack Cleanout

Joint and crack cleanout covers the work of removing existing joint sealant and foreign materials, to a depth of up to 1" from transverse and longitudinal joints and cracks prior to resurfacing. The work is usually done with a hooked device, not unlike a stove poker. The pay item is "Joint and Crack, Cleanout", measured in feet of joints and cracks so treated. Cleaned cracks 1” wide and greater shall be filled with hand patching.

6.06.12 (revised 1-23-2012)

Reinforcement

Generally speaking, if the curb and gutter is tied to a reinforced concrete pavement, shoulder or base course, the curb and gutter will be reinforced. Conversely, if it is tied to a non-reinforced pavement, shoulder or base course, reinforcement will be omitted in the curb and gutter.

6.06.13 (revised 1-23-2012)

Curb and Gutter Removal

The following five typical cases are to be used where the entire roadway surface is to be removed, together with the adjacent curb and gutter. Pay items, according to the ***Standard Specifications for Construction***, are shown below each sketch:

6.06.13 (continued)

CONCRETE

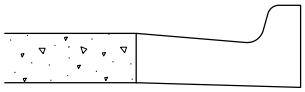

Pavt, Rem
INCLUDES CONCRETE PAVEMENT AND CURB & GUTTER

HMA 12″ OR LESS OVER CONCRETE

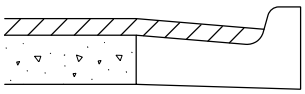

HMA Surface, Rem
Pavt, Rem
INCLUDES CONCRETE PAVEMENT AND CURB & GUTTER

HMA MORE THAN 12″ OVER CONCRETE

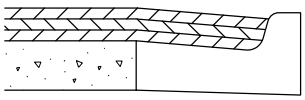

Pavt, Rem
TWO QUANTITIES:
1. ALL OF THE HMA
2. UNDERLYING PAVEMENT AND CURB & GUTTER

HMA 12″ OR LESS OVER GRAVEL

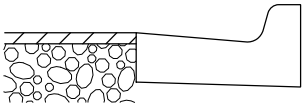

HMA Surface, Rem
Excavation, Earth
REMOVAL OF GRAVEL
Curb and Gutter, Rem

HMA MORE THAN 12″ OVER GRAVEL

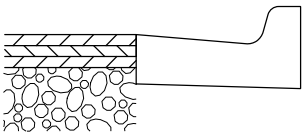

Pavt, Rem
Excavation, Earth
REMOVAL OF GRAVEL
Curb and Gutter, Rem

8.09.04

Maintenance Painting Notes

A. This bridge is coated with lead based paint. [Existing bridge was built before 1967, has never been repainted, and has the original paint system (i.e. not uncoated A588 steel).] (8-20-2009)

B. This bridge is coated with lead based paint. The structural steel has been blast cleaned prior to coating. The additional effort to clean the structural steel will not be paid for separately but will be considered included in the bid items. [Existing bridge was built between 1967 and 1978, has never been repainted, and has the original paint system (i.e. not uncoated A588 steel).] (8-20-2009)

C. This bridge is coated with a lead based coating system. The structural steel has been blast cleaned prior to coating. The additional effort to clean the structural steel will not be paid for separately but will be considered included in the bid items. [Existing bridge was repainted between 1967 and 1978.] (8-20-2009)

D. This bridge is coated with a zinc based coating system. The structural steel has been blast cleaned prior to coating. The additional effort to clean the structural steel will not be paid for separately but will be considered included in the bid items. [Existing bridge was built after 1978, or was repainted after 1978. It does not have uncoated A588 steel.] (8-20-2009)

E. This bridge has uncoated A588 structural steel. The additional effort to clean the structural steel and the additional coating material required due to excessive surface profile will not be paid for separately but will be considered included in the bid items. [Existing bridge has uncoated A588 steel.] (8-20-2009) (1-23-2012)

8.09.04 (continued)

F. See Subsection 715 of the Standard Specifications for Protection of Work and Environment During the Blast Cleaning of Structures.

G. ___ (conduits) (mains) shall (*not) be cleaned and coated. (*See Subsection 715 of the Standard Specifications.) [*Use for Johns Manville Transite (asbestos) ducts or when protective shielding is requested by the utility company.] (8-6-92)

H. The contractor shall notify each utility company a minimum of three full working days in advance of work impacting that company's conduits or facilities. (8-20-2009)

I. End diaphragms of spans _____ shall be removed to permit proper cleaning and coating. See Subsection 715 of the Standard Specifications. [Use when clearance between end diaphragms and backwall or adjacent diaphragms is 14" or less and the slab above the diaphragms is not to be removed.] (8-6-92)

J. When hanger assemblies are not to be replaced, the existing paint under the link plates shall be protected from damage due to blast cleaning by inserting an approved material around the periphery of the link plates. The material shall be removed prior to coating. (Included in the bid item “Steel Structure, Cleaning, Type 4 (Structure No.)".) (12-5-2005)

K. The Engineer shall inspect the structural steel parts that have been blast cleaned for evidence of cracks or loss of section due to corrosion of more than 25 percent. Such deterioration shall be reported in writing to the Region Bridge Engineer. (9-2-2003)

L. The estimated area of structural steel to be coated is ____ square feet.

8.09.04

Maintenance Painting Notes

A. This bridge is coated with lead based paint. [Existing bridge was built before 1967, has never been repainted, and has the original paint system (i.e. not uncoated A588 steel).] (11-28-2011)

B. This bridge is coated with lead based paint. The structural steel has been blast cleaned prior to coating. The additional effort to clean the structural steel will not be paid for separately but will be considered included in the bid items. [Existing bridge was built between 1967 and 1978, has never been repainted, and has the original paint system (i.e. not uncoated A588 steel).] (11-28-2011)

C. This bridge is coated with a lead based coating system. The structural steel has been blast cleaned prior to coating. The additional effort to clean the structural steel will not be paid for separately but will be considered included in the bid items. [Existing bridge was repainted between 1967 and 1978.] (11-28-2011)

D. This bridge is coated with a zinc based coating system. The structural steel has been blast cleaned prior to coating. The additional effort to clean the structural steel will not be paid for separately but will be considered included in the bid items. [Existing bridge was built after 1978, or was repainted after 1978. It does not have uncoated A588 steel.] (11-28-2011)

E. This bridge has uncoated A588 structural steel. The additional effort to clean the structural steel and the additional coating material required due to excessive surface profile will not be paid for separately but will be considered included in the bid items. [Existing bridge has uncoated A588 steel.] (11-28-2011) (1-23-2012)

8.09.04 (continued)

F. See Subsection 715 of the Standard Specifications for Protection of Work and Environment During the Blast Cleaning of Structures.

G. ___ (conduits) (mains) shall (*not) be cleaned and coated. (*See Subsection 715 of the Standard Specifications.) [*Use for Johns Manville Transite (asbestos) ducts or when protective shielding is requested by the utility company.] (8-6-92)

H. The contractor shall notify each utility company a minimum of three full working days in advance of work impacting that company's conduits or facilities. (11-28-2011)

I. End diaphragms of spans _____ shall be removed to permit proper cleaning and coating. See Subsection 715 of the Standard Specifications. [Use when clearance between end diaphragms and backwall or adjacent diaphragms is 14" or less and the slab above the diaphragms is not to be removed.] (8-6-92)

J. When hanger assemblies are not to be replaced, the existing paint under the link plates shall be protected from damage due to blast cleaning by inserting an approved material around the periphery of the link plates. The material shall be removed prior to coating. (Included in the bid item “Steel Structure, Cleaning, Type 4 (Structure No.)".) (12-5-2005)

K. The Engineer shall inspect the structural steel parts that have been blast cleaned for evidence of cracks or loss of section due to corrosion of more than 25 percent. Such deterioration shall be reported in writing to the Region Bridge Engineer. (9-2-2003)

L. The estimated area of structural steel to be coated is ____ square feet.

DRAWN BY: BLT CHECKED BY: VZ APPROVED BY: DAJ	MICHIGAN DEPARTMENT OF TRANSPORTATION BUREAU OF HIGHWAY DEVELOPMENT H PILE ALTERNATE SPLICE DETAILS	ISSUED: 01/23/12 SUPERSEDES: 02/14/11

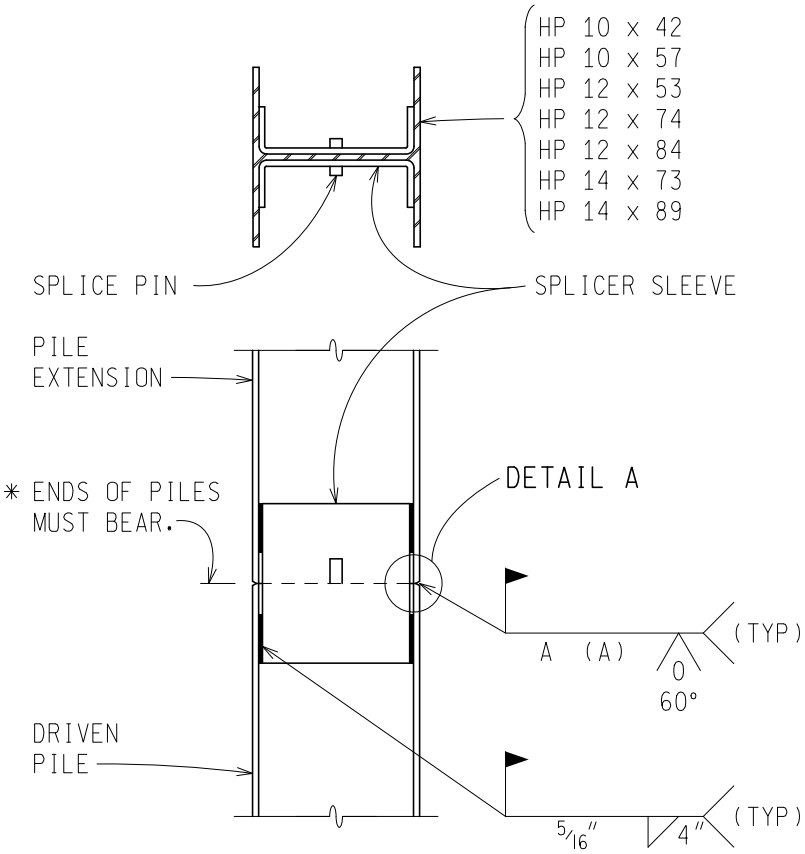

ALTERNATE SPLICE DETAILS

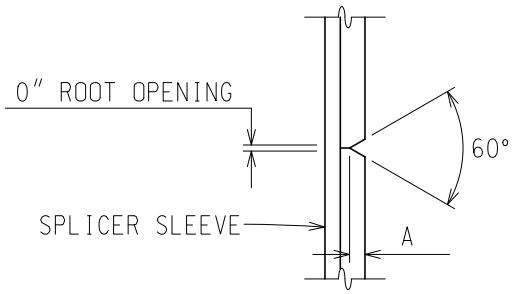

DETAIL A

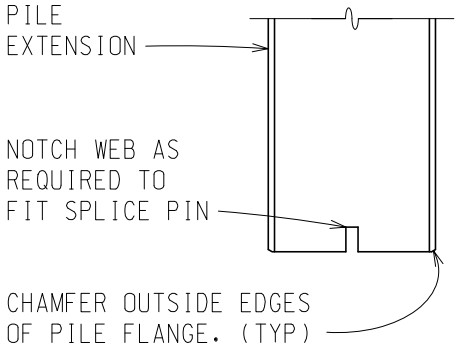

NOTCH DETAIL

PILE	WELD SIZE (A)
HP 10 x 42 HP 10 x 57 HP 12 x 53	5/16" 5/16" 5/16"
HP 12 x 74 HP 14 x 73 HP 14 x 89	3/8" 3/8" 3/8"
HP 12 x 84	7/16"
ALL OTHERS	CHECK WITH MDOT CONSTRUCTION FIELD SERVICES GEOTECHNICAL SECTION AND THE BRIDGE FIELD SERVICES SECTION.

NOTES:

* SET PILE EXTENSION IN PLACE WITH SPLICER SLEEVE ATTACHED, TAP SEVERAL TIMES WITH THE HAMMER TO IMPROVE BEARING CONTACT, THEN COMPLETE WELDING OF SLEEVES TO LOWER SECTION.

DO NOT USE THE ALTERNATE SPLICE SLEEVE DETAIL WITH INTEGRAL ABUTMENTS, PILE BENTS, OR ANY OTHER PILES THAT MUST RESIST BENDING STRESSES. ONLY USE FULL PENETRATION BUTT WELD SPLICE DETAIL WITH INTEGRAL ABUTMENTS.

PREPARED BY DESIGN DIVISION	8.21.02

DRAWN BY: BLT CHECKED BY: VZ APPROVED BY: DAJ	MICHIGAN DEPARTMENT OF TRANSPORTATION BUREAU OF HIGHWAY DEVELOPMENT H PILE SPLICE (FULL PENETRATION BUTT WELD)	ISSUED: 01/23/12 SUPERSEDES: 02/14/11

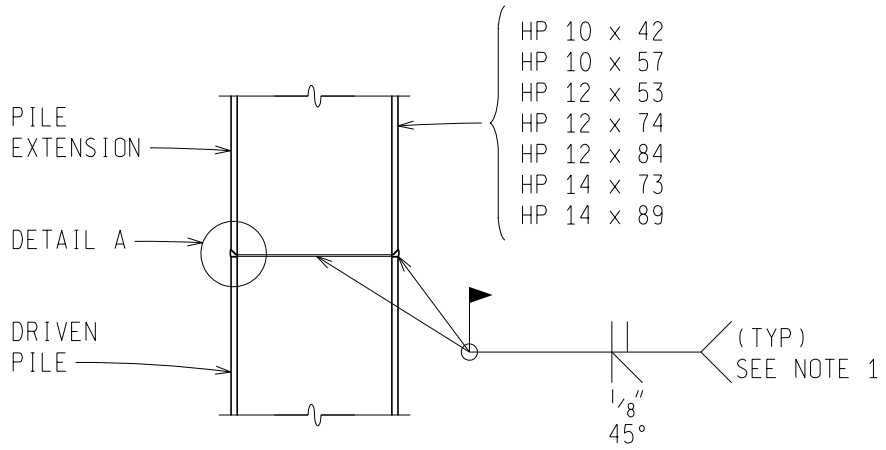

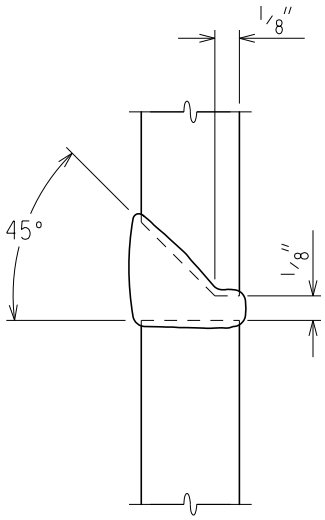

DETAIL A

SPLICE DETAILS

FOR PILES IN PLACE (HORIZONTAL JOINT)

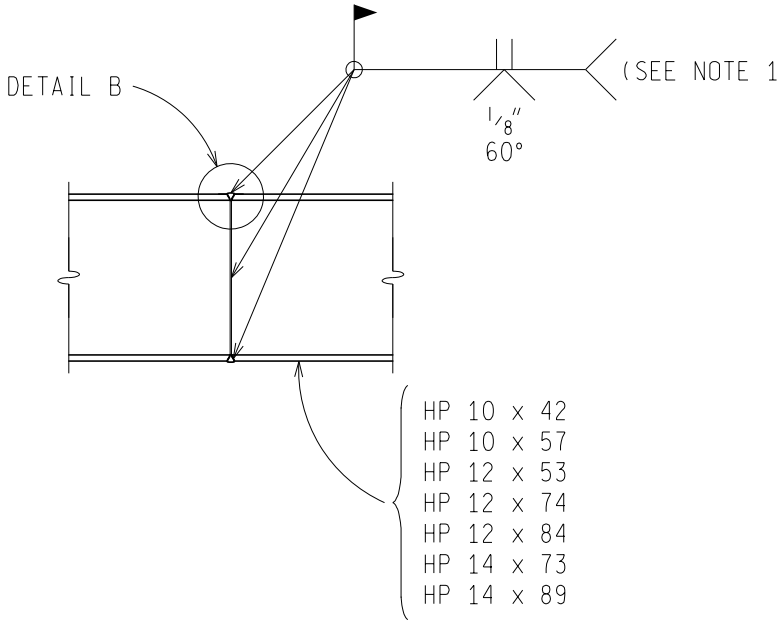

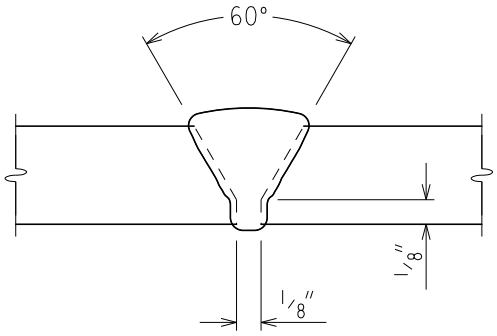

DETAIL B

SPLICE DETAILS

FOR PILES IN HORIZONTAL POSITION

NOTE 1: BACK GOUGE AND GRIND EDGE PREPARATION SMOOTH.

PREPARED BY DESIGN DIVISION	8.21.02A