Road & Bridge Design Publications

Monthly Update – March 2012

Revisions for the month of **March** are listed and displayed below. New special details are to be included in projects submitted for the **June** letting as is stated on the special detail index sheets. Please contact Wayne Pikka (pikkaw@michigan.gov) for any questions related to the road changes or Vladimir Zokvic (zokvicv@michigan.gov) for questions related to the bridge changes.

Special Details

R-80-E: Granular Blankets, Under Drains & Outlet Endings, & Sewer Bulkheads: On sheets 3, 4, & 7, Class II material was replaced with Class II AA material above foundation, bank, and subgrade under drains, as well as under drain outlets. On sheet one, in the granular blanket type 2, option 3 sketch, the distance from the bottom of the ditch to the bottom edge of the drainage geocomposite was changed from 4" minimum to 6" minimum to match the note associated with the sketch. On sheets 5 & 6, the 4" layer of OGDC was revised to 6". On sheet 8, in the middle sketch, a rodent screen was added.

R-126-I: Placement of Temporary Concrete Barrier: The temporary concrete barrier sloped end section details on sheet 4 were revised to provide a generic description for use with barrier shapes other than the New Jersey shape.

Road Design Manual

2.04: Earthwork-General: This section was updated to current practice. References to IGrds (replaced by Geopak) and Manual Earthwork Volumes Sheets were eliminated.

6.01.06: Pavement Design & Selection Policy: The section was revised to meet LCCA Process revisions approved by EOC on 02/09/2012 and announced in BOHIM 2012-01.

6.01.07: Alternate Pavement Bidding: This is a new section added to the RDM in regards to the alternate pavement bidding process. The Alternate Pavement Bidding Process formalizes and implements the process approved by EOC for APB selection, development, administration, and SEP-14 reporting.

Chapter 14: Previously announced "interim updates" have been incorporated into Chapter 14 this month. In addition, other minor wording changes such as Division/Section/Unit name changes were made. (For anyone keeping a hard copy of the manual, you will want to print the entire chapter as some pages were combined and blank pages eliminated.)

Road & Bridge Design Publications

Monthly Update – March 2012

14.01: General & 14.02: Design Package Evaluations: References to forms were eliminated in favor of web based applications. A few minor changes were also made to update the section to current practice.

14.10: Scope Verification Meeting: The Project Scoping Checklist was replaced with scoping forms and checklists and an incorrect section number was revised.

14.18: Pavement Design: Minor wording changes were made to update the process approval procedure.

14.31: Environmental Review and Clearance: This section has been rewritten and the index revised to add new subsections. This revision incorporates the current environmental two stage clearance process separating classification and certification. A process recently developed through FHWA/MDOT EDC (Every Day Counts) activity now allows certain preliminary engineering tasks to continue prior to environmental classification with internal approval from the Bureau of Development, Environmental Manager.

14.58: Approval of Special Provisions: Minor wording changes were made to bring the section up to current practice. (In the areas of order of preference for conflict resolution of plan and proposal information and information for submitting new special details)

Bridge Design Manual

The following changes are new for this months update:

Chapter 12 Table of contents: **A**dded Section 12.07.10, Partial Painting.

12.03.01 & 12.07.08: Bridge Management Section now in Design Division.

12.04.07: Updated C& T to Construction Field Services

12.05.04: Safety Programs section is now part of Design Division.

12.07.06: Updated contact person for Performance Warranties.

Appendix 12.09.02: Updated Construction Field Services in Matrix User Guidelines

12.07.10: Added criteria for partial painting and fascia beams.

Road & Bridge Design Publications

Monthly Update – March 2012

The following changes have been previously issued and are included here due to "Interim Update" status being removed:

Chapter 12 Table of contents: Added Section 12.08.08, Roadway Widening With Filler Walls.

Chapter 12 Table of contents & 12.09.03: Deleted Section 12.09.03. Moved information to section 7.02.31.

Table of Contents & 12.07.08: The Department of Environmental Quality (MDEQ) has been resurrected thus the sections were updated to reflect this change.

12.00: Definition of "Bridges To Remain In Place". This is clarity to the Bridge Designer as any Design Exceptions required are submitted by the Road Designer.

12.00 & 12.04.08: All issues related to reconstruction (deck replacements or greater) have been moved to Section 7.02.31.

12.01.01: Deleted requirement for coefficient of friction of cover plate. Cover plates shall still be slip resistant but no specific coefficient of friction value will be required. Special provision shall cover requirements.

12.04: Directed designers to section 7.02.19 G for parabolic crowns on overlay projects.

12.08.08: Criteria added for filler walls with regard to clear zones and guardrail requirements.

Appendix 12.02: The entire appendix has been updated for clarity and ease of use. All issues related to reconstruction (deck replacements or greater) have been moved to Section 7.02.31. Changed reference to "Bridges To Remain in Place" in tables to "Bridges Being Rehabilitated". The criteria for MDOT Bridge 3R (Rehabilitation) standards and "Bridges To Remain in Place" are the same but should not be used interchangeably. See Definition in Section 12.00.

Bridge Design Guides

8.32.05: Clarified "D" dimension in side view.

Road & Bridge Design Publications

Monthly Update – March 2012

Please note: Corresponding updates to automated tools, including but not limited to the MDOT Bulletin Board, MDOT Cell Library, Bridge Auto Draw Program, etc., may be required in tandem with some of this month's updates. Until such updates to automated tools can be made, it is the designer's/detailer's responsibility to manually incorporate any necessary revisions to notes and plan details to reflect these revisions.

Index to Special Details

3-26-2012

⑥

SPECIAL DETAIL NUMBER	NUMBER OF SHEETS	TITLE	CURRENT DATE
21	2	GUARDRAIL AT INTERSECTIONS	5-24-01
24	5	GUARDRAIL ANCHORED IN BACK SLOPE TYPES 4B & 4T	7-22-02
R-29-H	4	DRIVEWAY OPENINGS & APPROACHES, AND CONCRETE SIDEWALK	10-20-11
R-31-F	2	INTEGRAL CURB AND INTEGRAL CURB & GUTTER	1-30-12
R-42-F	6	TYPICAL JOINT LAYOUTS FOR CONCRETE PAVEMENT	12-6-10
R-43-I	2	LOCATION OF TRANSVERSE JOINTS IN PLAIN CONCRETE PAVEMENT	2-8-12
R-45-I	2	PAVEMENT REINFORCEMENT FOR BRIDGE APPROACH	12-6-11
* R-80-E	8	GRANULAR BLANKETS, UNDERDRAINS, OUTLET ENDINGS & BULKHEADS	3-22-12
R-99-B	2	CHAIN LINK FENCE WITH WIRE ROPE	11-1-00
R-100-G	4	SEEDING AND TREE PLANTING	9-8-11
* R-126-I	5	PLACEMENT OF TEMPORARY CONCRETE BARRIER	3-26-12

*** Denotes New or Revised Special Detail to be included in projects for (beginning with) the June letting.**

Note: Former Standard Plans IV-87, IV-89, IV-90, and IV-91 Series, used for building cast-in-place concrete head walls for elliptical and circular pipe culverts, are now being replaced with plans that detail each specific size. The Municipal Utilities Unit will provide these full sized special details for inclusion in construction plans for MDOT jobs. To assure prompt delivery, requests ***must*** be made in advance.

Former Standard Plans IV-93 and IV-94 series have been replaced with precast concrete box & three-sided culverts as per the 2012 Standard Specifications for Construction.

Index to Bridge Detail Sheets

3-26-2012

⑦

DETAIL NUMBER	NUMBER OF SHEETS	TITLE	CURRENT DATE
B-21-I	4	BRIDGE RAILING, 2 TUBE	6-3-11
B-23-E	4	BRIDGE RAILING, THRIE BEAM RETROFIT	10-19-09
B-25-G	6	BRIDGE RAILING, AESTHETIC PARAPET TUBE	1-30-12
EJ3Z	1 or 2	EXPANSION JOINT DETAILS	6-8-11
EJ4M	1 or 2	EXPANSION JOINT DETAILS	6-8-11
PC-2G	1	70" PRESTRESSED CONCRETE I-BEAM DETAILS	3-31-06
PC-4E	1	PRESTRESSED CONCRETE 1800 BEAM DETAILS	3-31-06
PC-1L	1	PRESTRESSED CONCRETE I-BEAM DETAILS	7-12-06

*** Denotes New or Revised Special Detail to be included in projects for (beginning with) the June letting.**

Note: Details EJ3Z & EJ4M are interactive, i.e. designers and detailers choose details based upon railing type and angle of crossing. Place all details appropriate for the project, structure specific information, and the Expansion Joint Device quantity on the sheet. The sheet shall then be added to the plans as a normal plan sheet.

Detail PC-1L, PC-2G and PC-4E shall have structure specific information and quantities added to the sheet. The sheet shall then be added to the plans as a normal plan sheet.

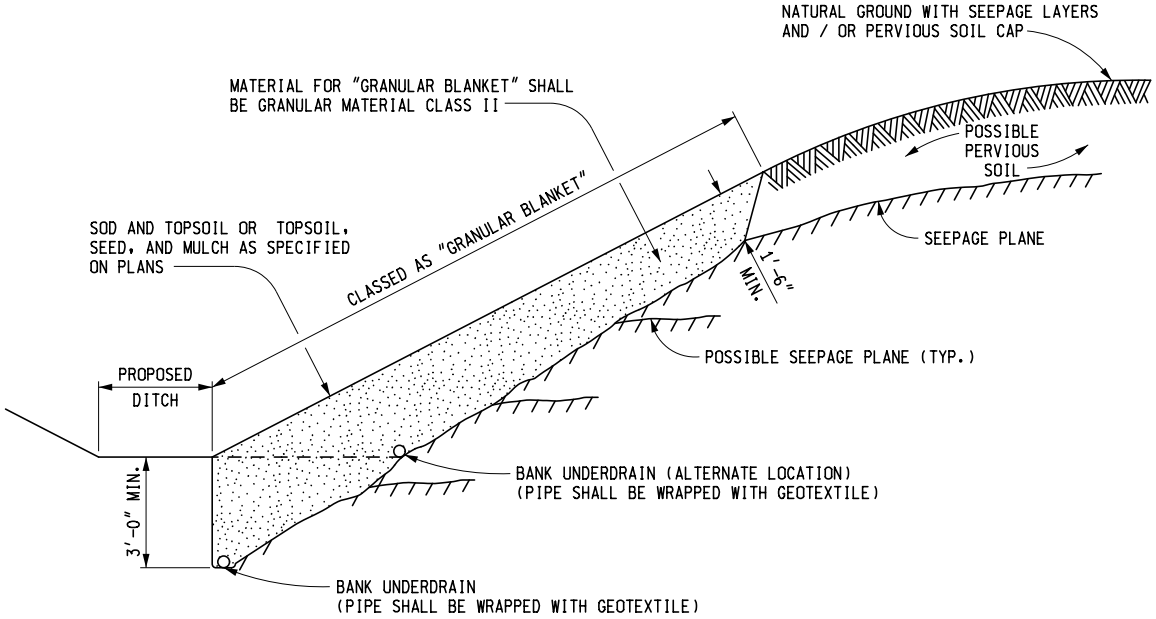

GRANULAR BLANKET TYPE 1

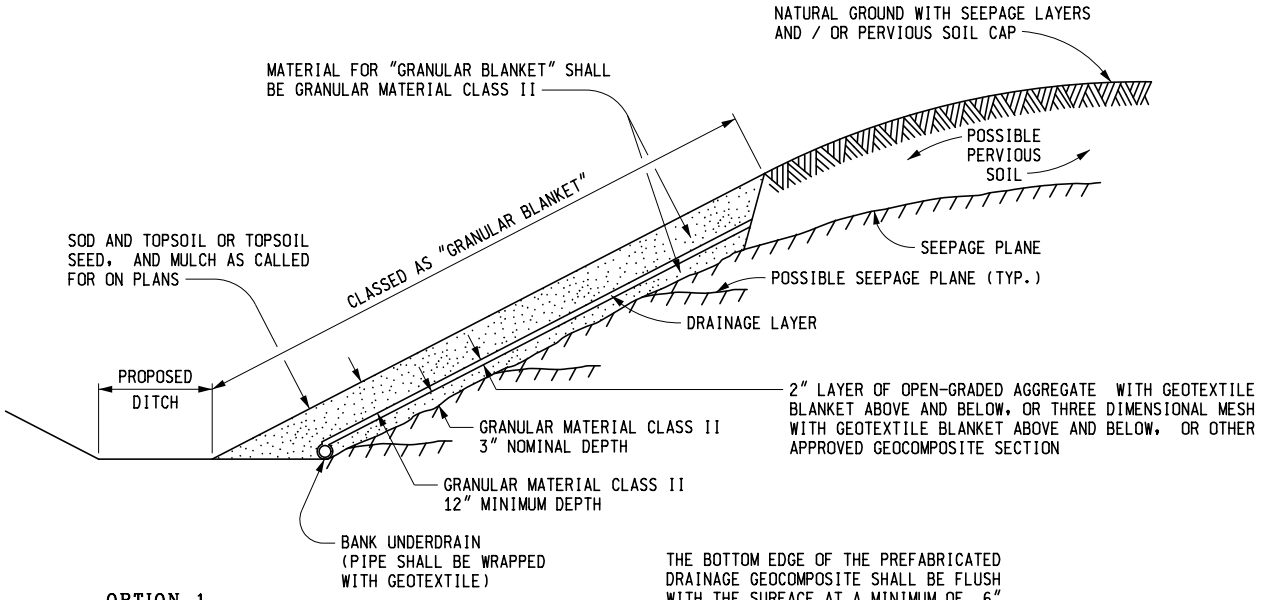

OPTION 1

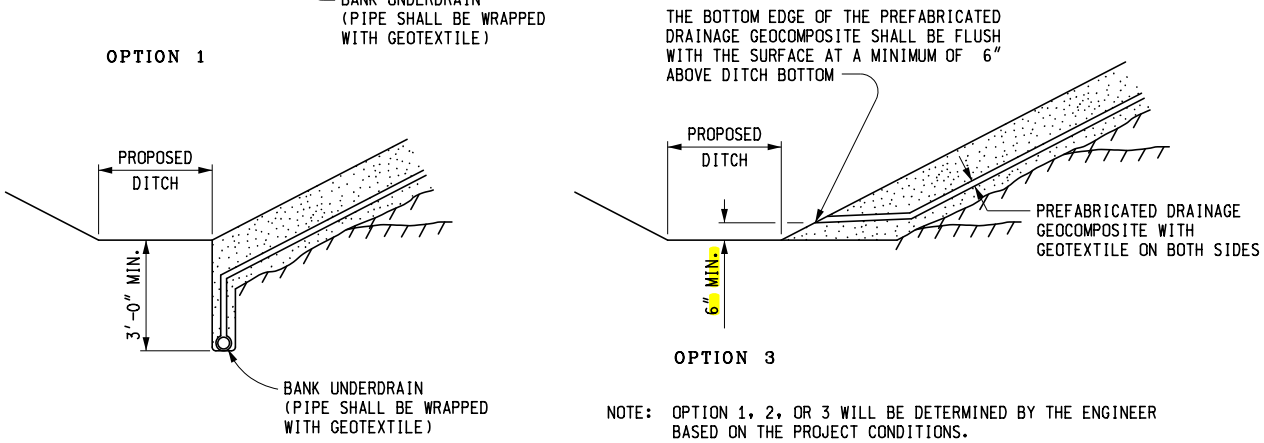

OPTION 3

OPTION 2

NOTE: OPTION 1, 2, OR 3 WILL BE DETERMINED BY THE ENGINEER BASED ON THE PROJECT CONDITIONS.

GRANULAR BLANKET TYPE 2

MDOT Michigan Department of Transportation PREPARED BY DESIGN DIVISION DRAWN BY: B.L.T. CHECKED BY: W.K.P.	DEPARTMENT DIRECTOR Kirk T. Steudle APPROVED BY: _____ DIRECTOR, BUREAU OF FIELD SERVICES APPROVED BY: _____ DIRECTOR, BUREAU OF HIGHWAY DEVELOPMENT	MICHIGAN DEPARTMENT OF TRANSPORTATION BUREAU OF HIGHWAY DEVELOPMENT STANDARD PLAN FOR GRANULAR BLANKET, UNDERDRAINS, OUTLET ENDINGS FOR UNDERDRAINS, AND SEWER BULKHEADS F.H.W.A. APPROVAL · 3-22-2012 PLAN DATE · R-80-E · SHEET 1 OF 8

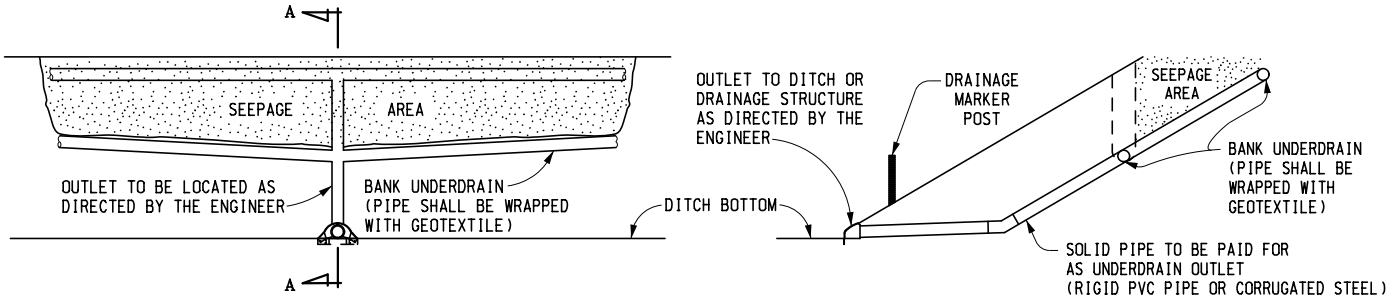

SECTION A - A

BANK UNDERDRAIN OUTLET

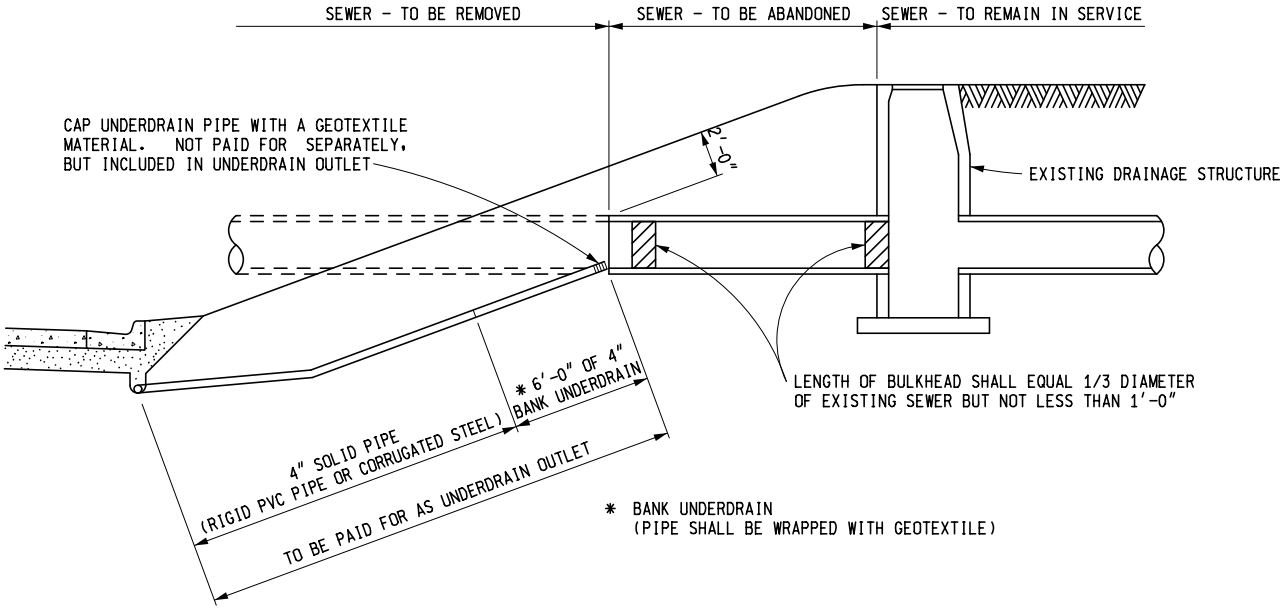

WEEPER UNDERDRAIN AND BULKHEADING SEVERED SEWER

MICHIGAN DEPARTMENT OF TRANSPORTATION
BUREAU OF HIGHWAY DEVELOPMENT STANDARD PLAN FOR

GRANULAR BLANKET, UNDERDRAINS, OUTLET ENDINGS FOR UNDERDRAINS, AND SEWER BULKHEADS

F.H.W.A. APPROVAL	3-22-2012 PLAN DATE	R-80-E	SHEET 2 OF 8

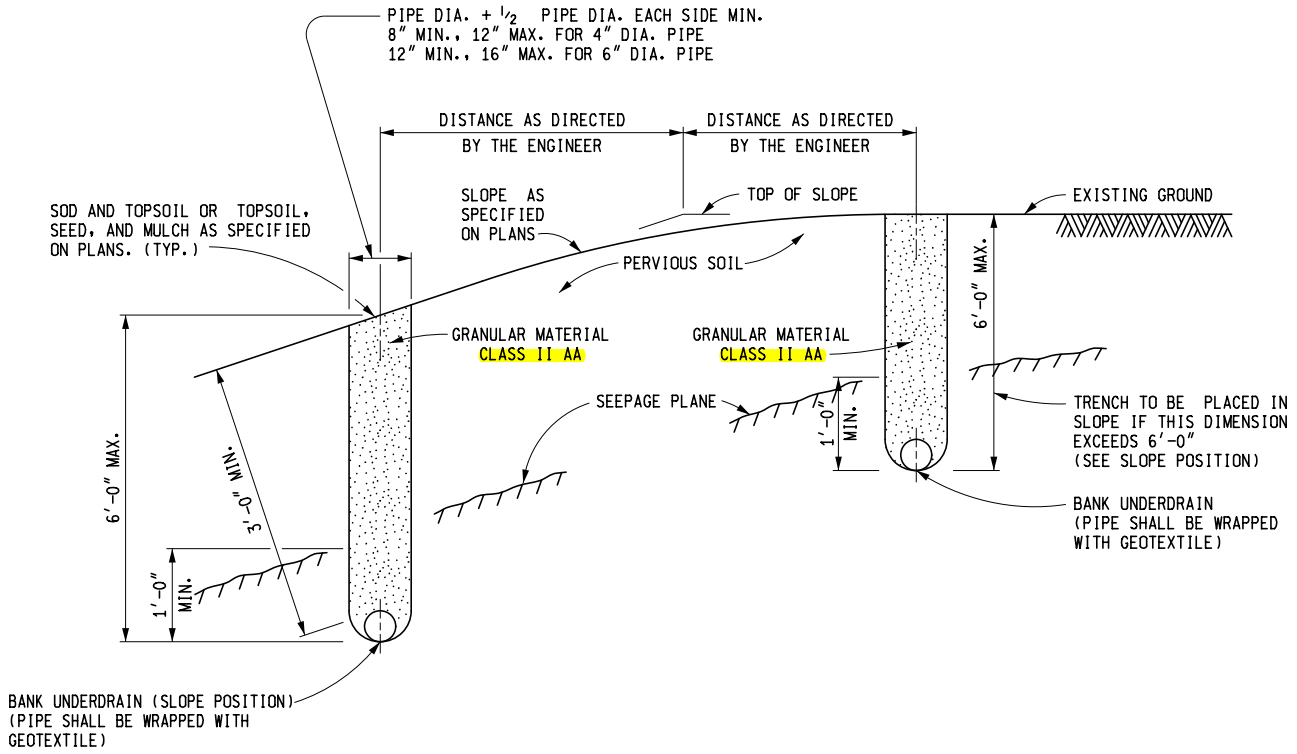

BANK UNDERDRAINS

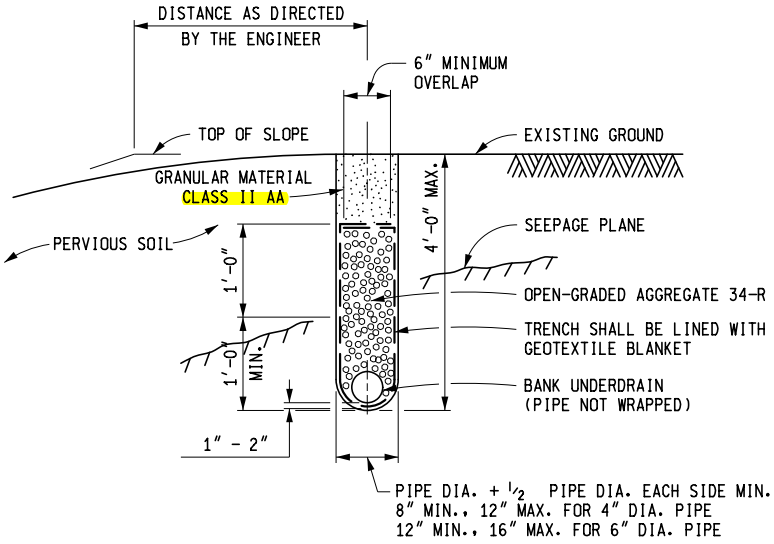

BANK UNDERDRAIN, OPEN-GRADED

MICHIGAN DEPARTMENT OF TRANSPORTATION
BUREAU OF HIGHWAY DEVELOPMENT STANDARD PLAN FOR

GRANULAR BLANKET, UNDERDRAINS, OUTLET ENDINGS FOR UNDERDRAINS, AND SEWER BULKHEADS

F.H.W.A. APPROVAL	3-22-2012 PLAN DATE	R-80-E	SHEET 3 OF 8

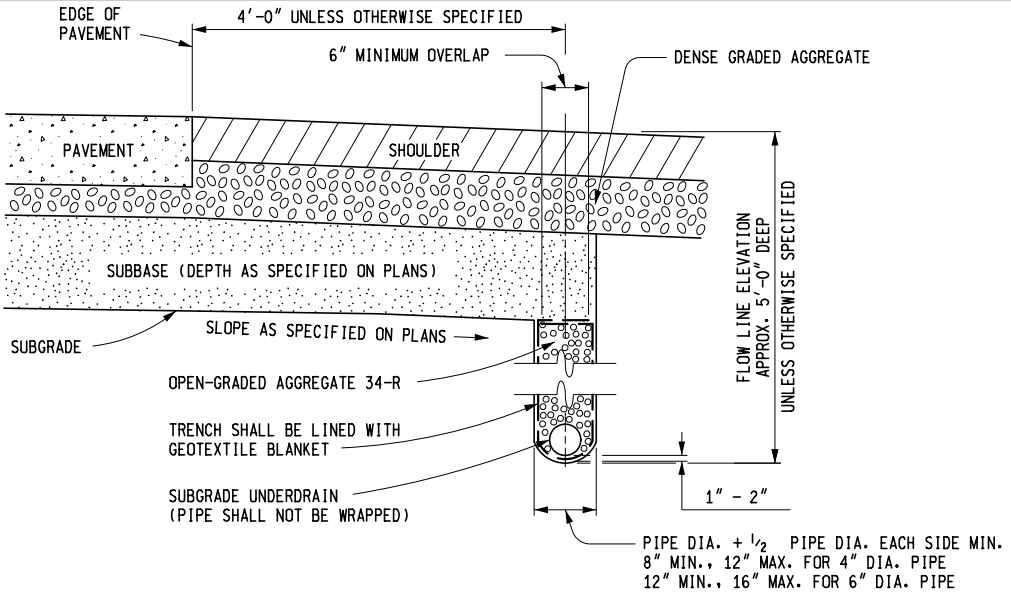

SUBGRADE UNDERDRAIN - OPEN-GRADED

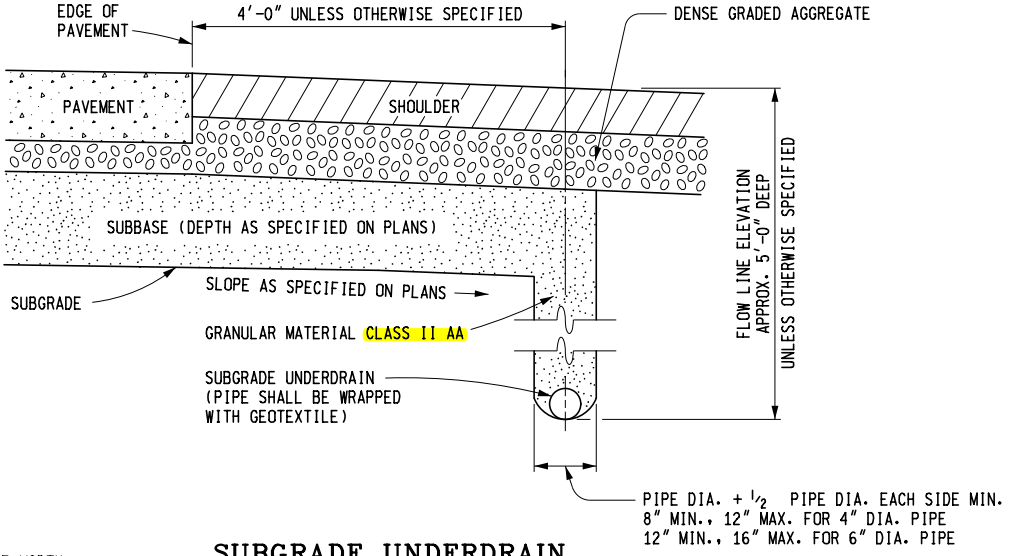

SUBGRADE UNDERDRAIN

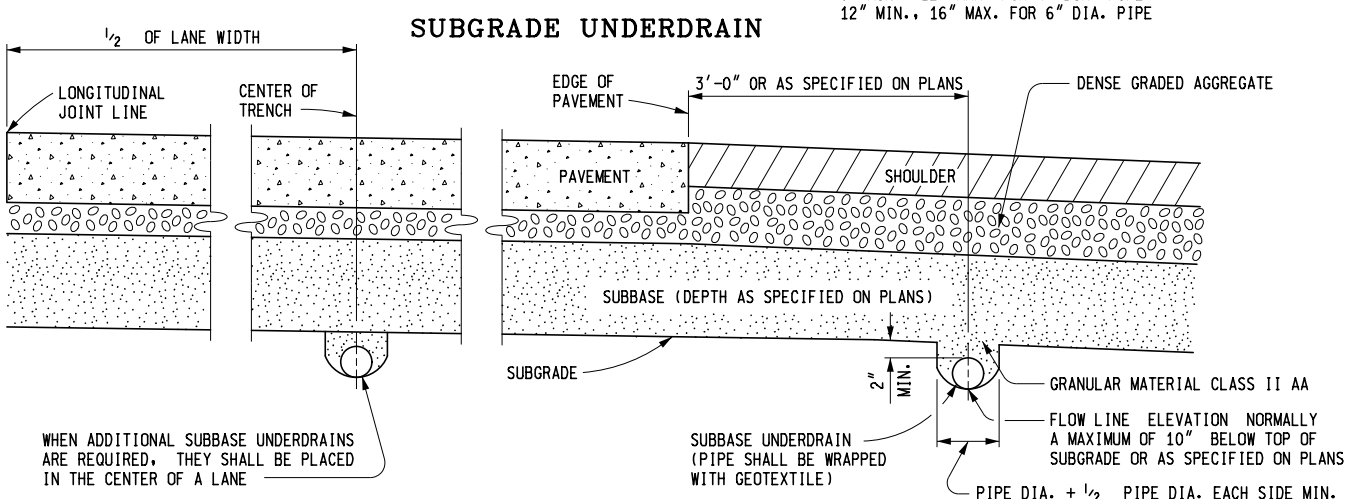

SUBBASE UNDERDRAIN

MICHIGAN DEPARTMENT OF TRANSPORTATION
BUREAU OF HIGHWAY DEVELOPMENT STANDARD PLAN FOR

GRANULAR BLANKET, UNDERDRAINS, OUTLET ENDINGS FOR UNDERDRAINS, AND SEWER BULKHEADS

F.H.W.A. APPROVAL	3-22-2012 PLAN DATE	R-80-E	SHEET 4 OF 8

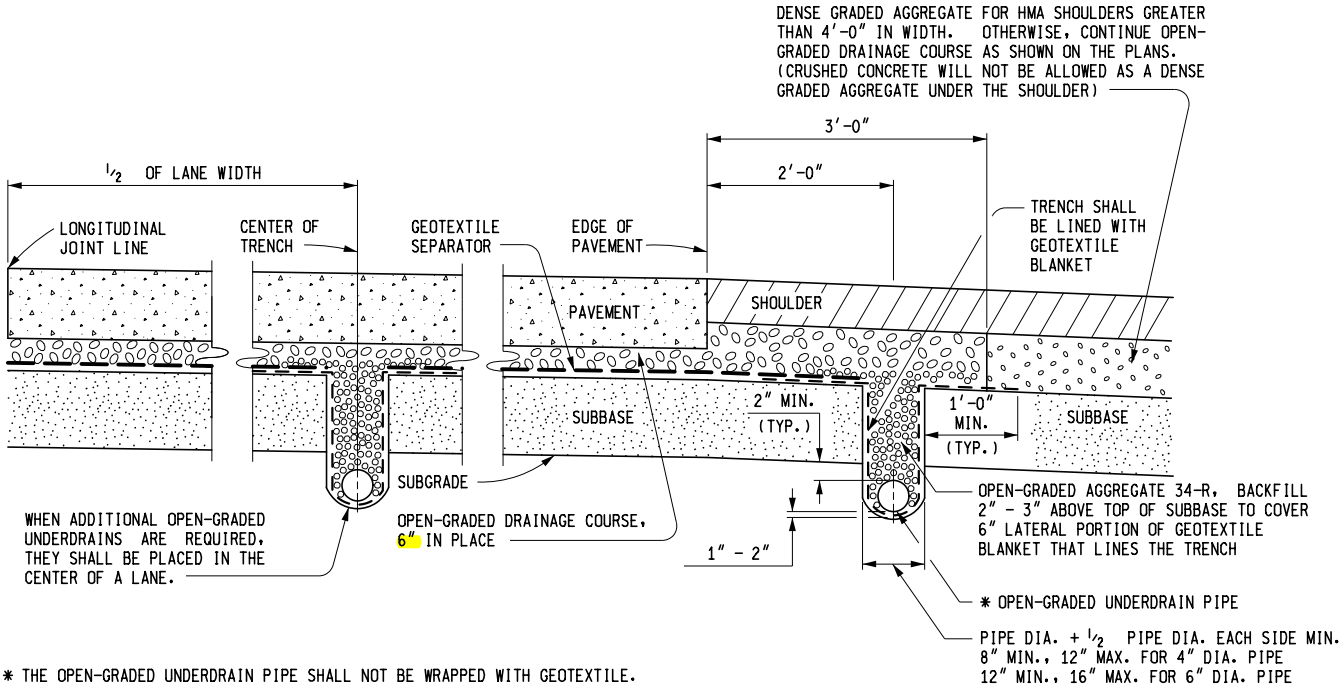

* THE OPEN-GRADED UNDERDRAIN PIPE SHALL NOT BE WRAPPED WITH GEOTEXTILE.

OPEN-GRADED UNDERDRAIN PIPE WITH GEOTEXTILE SEPARATOR

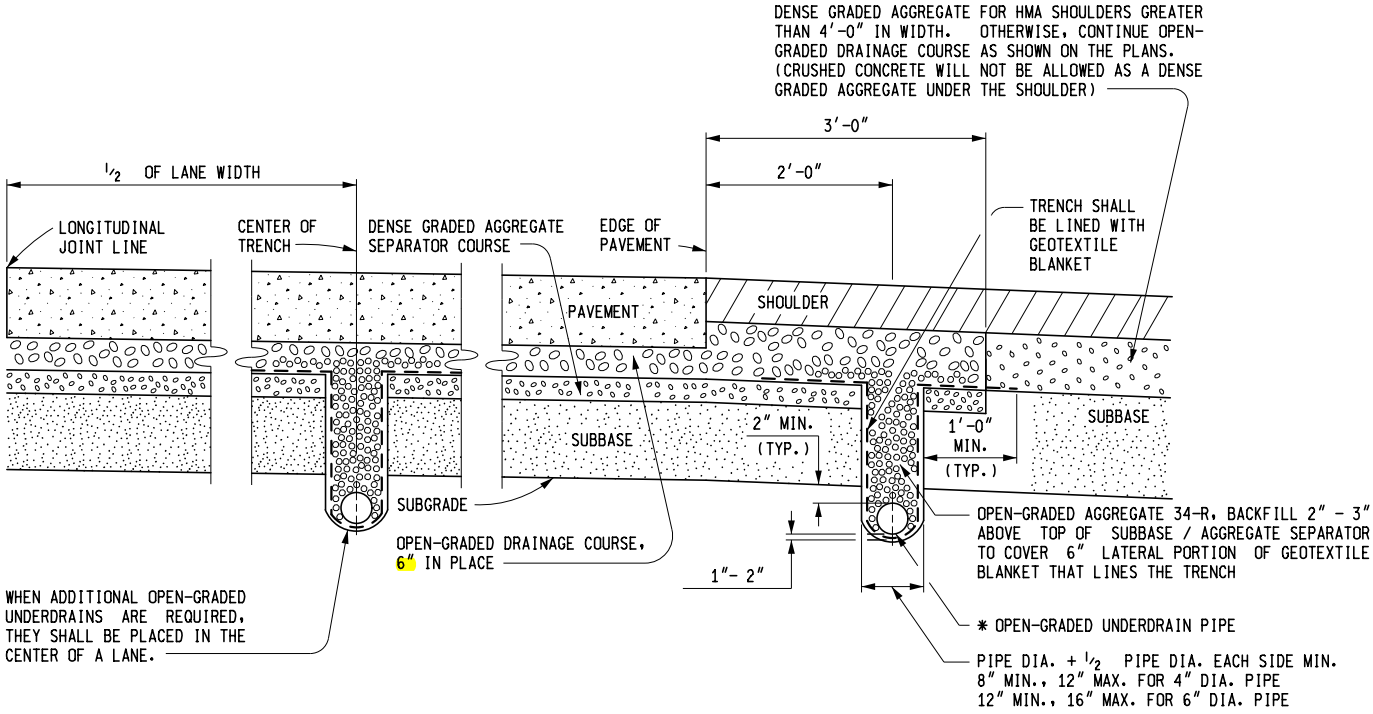

* THE OPEN-GRADED UNDERDRAIN PIPE SHALL NOT BE WRAPPED WITH GEOTEXTILE.

OPEN-GRADED UNDERDRAIN PIPE WITH DENSE GRADED AGGREGATE SEPARATOR COURSE

MICHIGAN DEPARTMENT OF TRANSPORTATION
BUREAU OF HIGHWAY DEVELOPMENT STANDARD PLAN FOR

GRANULAR BLANKET, UNDERDRAINS, OUTLET ENDINGS FOR UNDERDRAINS, AND SEWER BULKHEADS

F.H.W.A. APPROVAL	3-22-2012 PLAN DATE	R-80-E	SHEET 5 OF 8

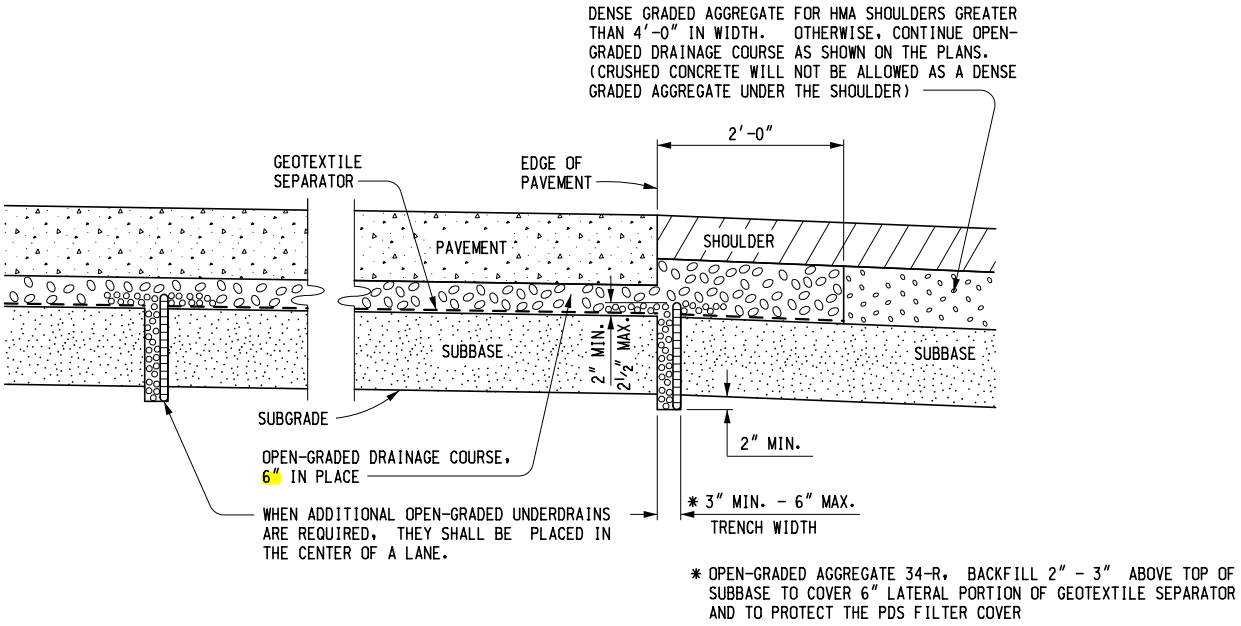

OPEN-GRADED UNDERDRAIN (PDS) WITH GEOTEXTILE SEPARATOR

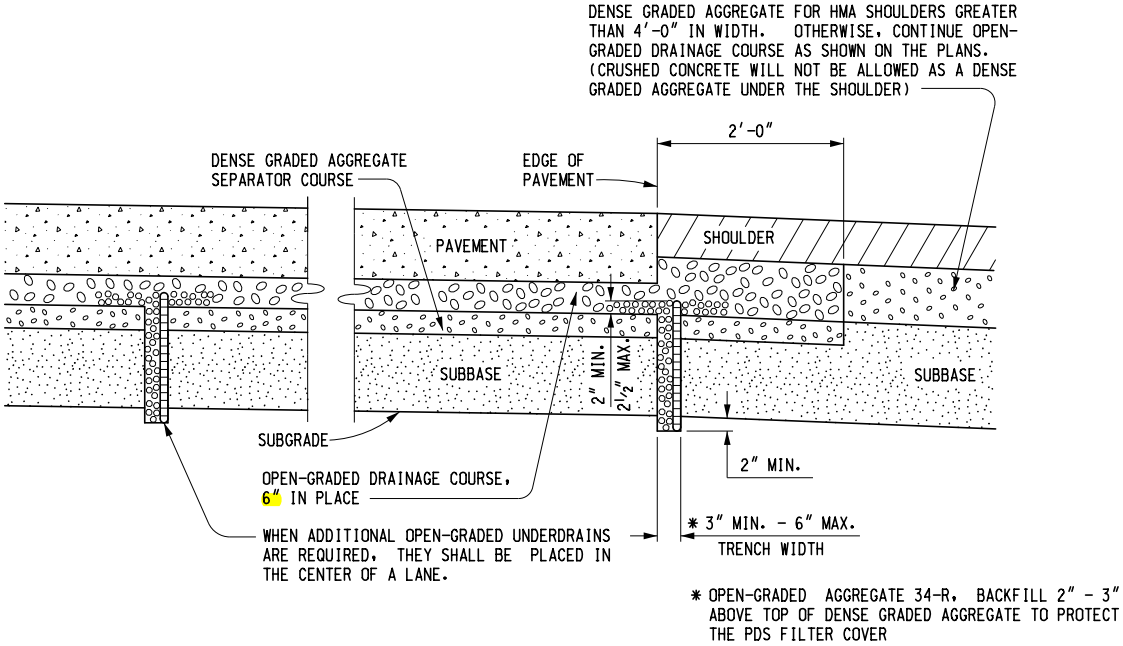

OPEN-GRADED UNDERDRAIN (PDS) WITH DENSE GRADED AGGREGATE SEPARATOR COURSE

MICHIGAN DEPARTMENT OF TRANSPORTATION
BUREAU OF HIGHWAY DEVELOPMENT STANDARD PLAN FOR

GRANULAR BLANKET, UNDERDRAINS, OUTLET ENDINGS FOR UNDERDRAINS, AND SEWER BULKHEADS

F.H.W.A. APPROVAL	3-22-2012 PLAN DATE	R-80-E	SHEET 6 OF 8

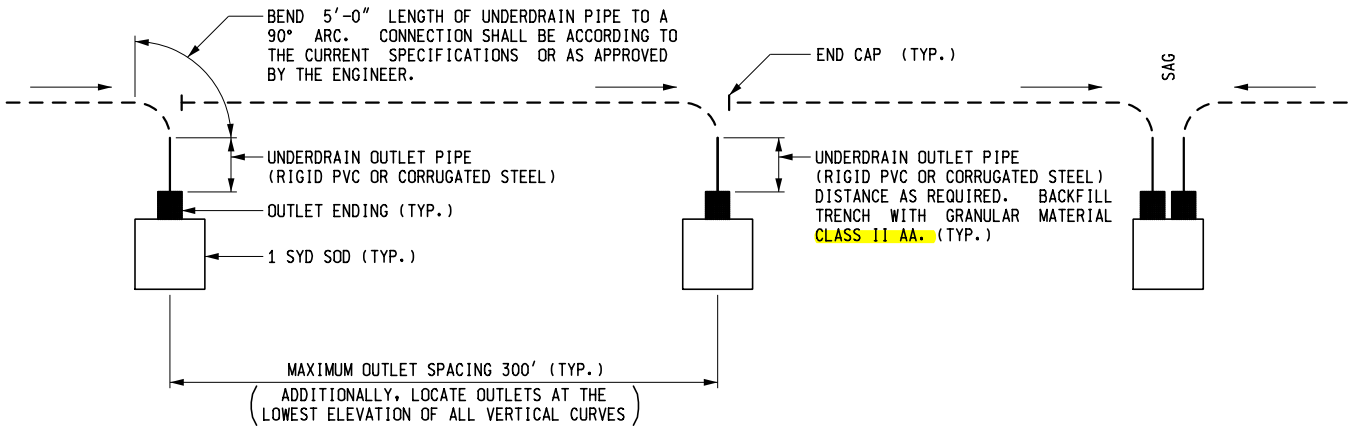

PLAN SHOWING OUTLETS FOR UNDERDRAINS

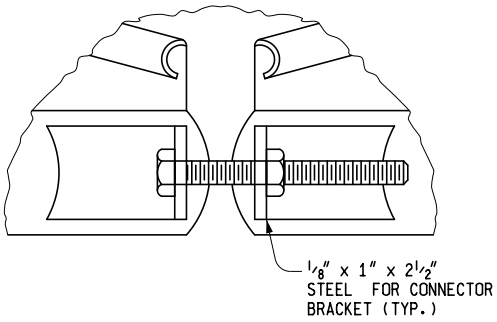

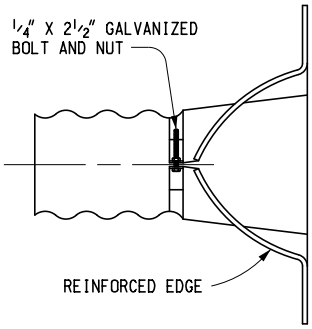

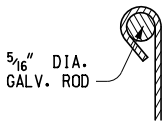

REINFORCED EDGE DETAIL

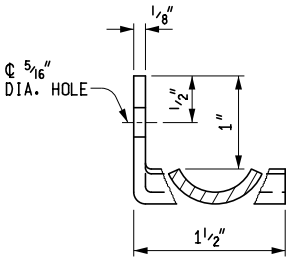

CONNECTOR BRACKET DETAIL

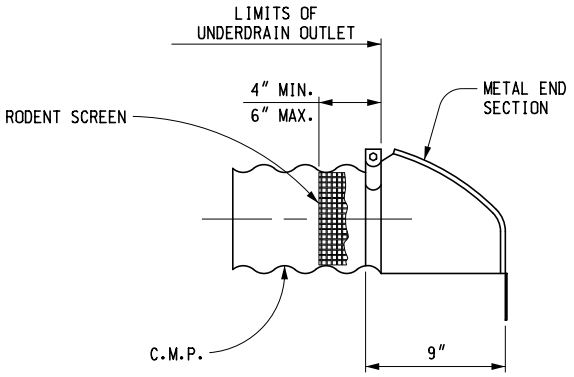

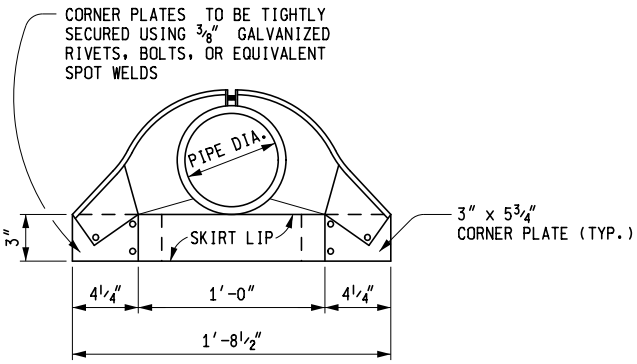

STEEL END SECTION FOR 4" OR 6" PIPE

MICHIGAN DEPARTMENT OF TRANSPORTATION
BUREAU OF HIGHWAY DEVELOPMENT STANDARD PLAN FOR

GRANULAR BLANKET, UNDERDRAINS, OUTLET ENDINGS FOR UNDERDRAINS, AND SEWER BULKHEADS

F.H.W.A. APPROVAL	3-22-2012 PLAN DATE	R-80-E	SHEET 7 OF 8

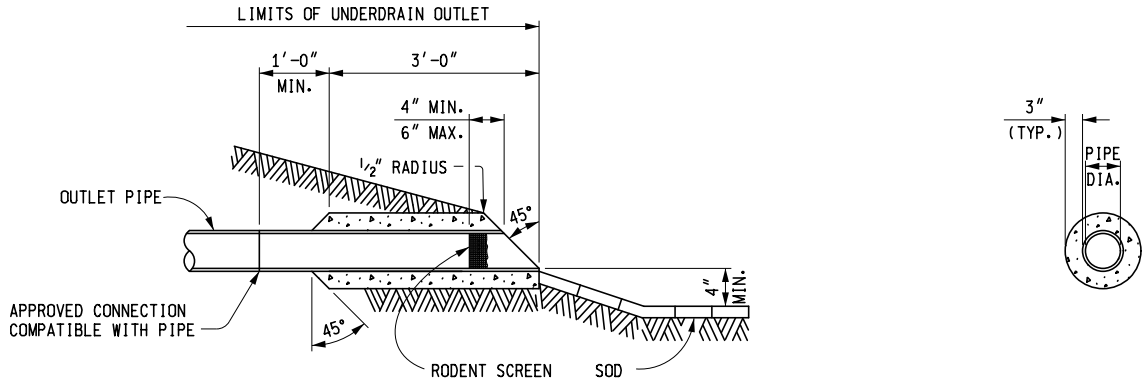

CONCRETE RING FOR 4" OR 6" PIPE

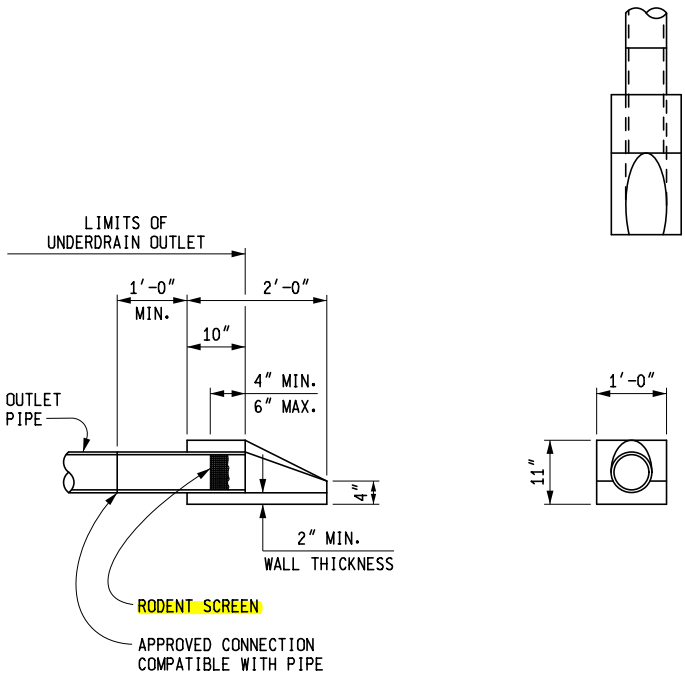

CONCRETE END SECTION FOR 4" OR 6" PIPE

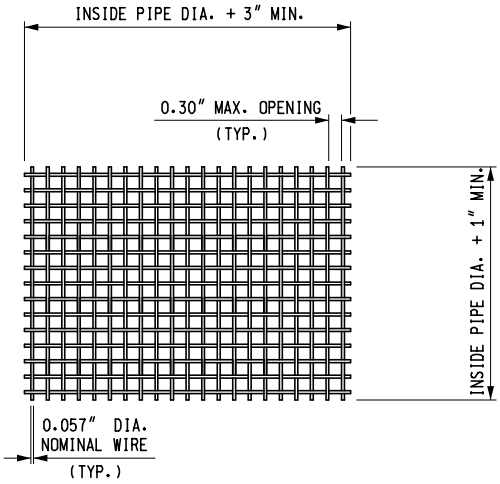

RODENT SCREEN

NOTES:

POSITIVE DRAINAGE SHALL BE PROVIDED FOR UNDERDRAINS AND UNDERDRAIN OUTLETS.

UNDERDRAIN PIPE SIZES SHALL BE AS SPECIFIED ON THE PLANS.

CONNECTIONS BETWEEN UNDERDRAIN PIPE AND UNDERDRAIN OUTLET PIPE SHALL BE CONSTRUCTED ACCORDING TO THE CURRENT STANDARD SPECIFICATION AND AS APPROVED BY THE ENGINEER.

CONNECTIONS, IF REQUIRED WITHIN THE OUTLET PIPE, SHALL BE ACCORDING TO APPLICABLE ASTM SPECIFICATIONS REFERENCED IN THE CURRENT STANDARD SPECIFICATIONS. THEY SHALL BE WATER TIGHT, AND OF THE SAME MATERIAL AS THE OUTLET PIPE.

OUTLET CONNECTIONS TO DRAINAGE STRUCTURES SHALL BE ACCORDING TO CURRENT STANDARD SPECIFICATIONS FOR DRAINAGE STRUCTURES.

UNDERDRAIN OUTLET PIPE SHALL BE RIGID PVC OR CORRUGATED METAL ONLY.

THE CONCRETE RING OR CONCRETE END SECTION SHALL BE CAST AROUND THE SAME TYPE OF PIPE AS THAT USED FOR UNDERDRAIN OUTLET PIPE.

STEEL END SECTIONS SHALL BE ATTACHED TO THE ENDS OF CORRUGATED METAL PIPE AS SPECIFIED ON THIS STANDARD PLAN, BY STANDARD METAL BANDS, OR BY OTHER CONNECTING DEVICES AS APPROVED BY THE ENGINEER.

HELICALLY CORRUGATED PIPE (EXCEPT PERFORATED PIPE) SHALL HAVE THE ENDS OF THE PIPE REROLLED TO FORM ANNULAR CORRUGATIONS FOR CONNECTING THE END SECTION.

MICHIGAN DEPARTMENT OF TRANSPORTATION
BUREAU OF HIGHWAY DEVELOPMENT STANDARD PLAN FOR

GRANULAR BLANKET, UNDERDRAINS, OUTLET ENDINGS FOR UNDERDRAINS, AND SEWER BULKHEADS

F.H.W.A. APPROVAL	3-22-2012 PLAN DATE	R-80-E	SHEET 8 OF 8

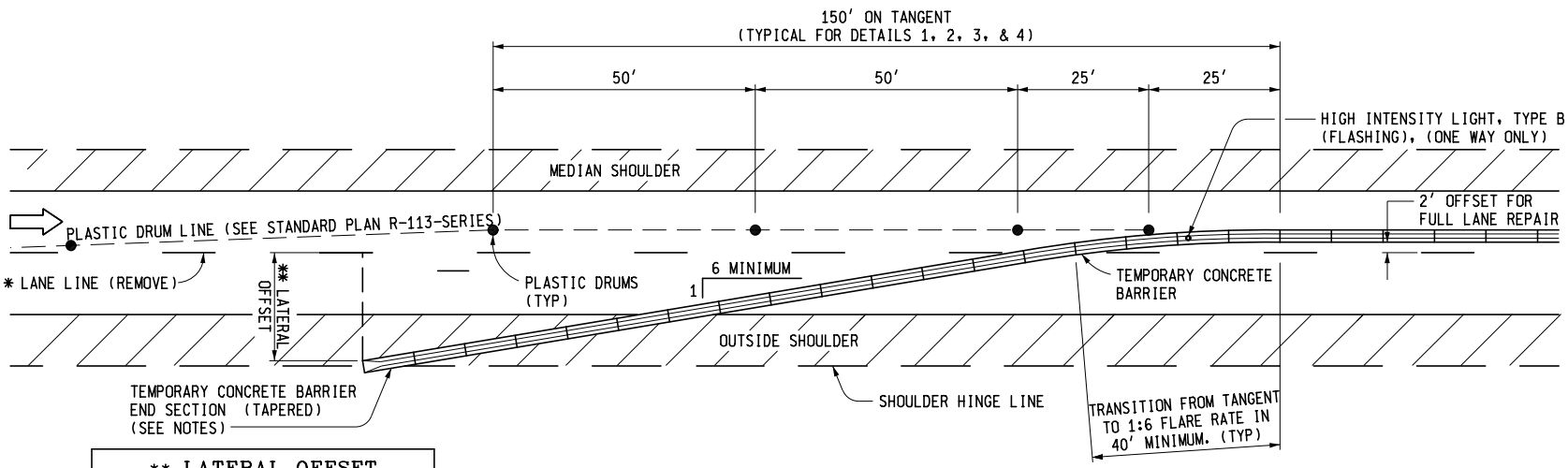

** LATERAL OFFSET (MINIMUM DISTANCE)	
SPEED (MPH)	DISTANCE (FEET)
≤ 35	15
40	18
45	20
50	23
≥ 55	31

* LANE LINE SHALL BE REMOVED A MINIMUM LENGTH EQUAL TO THE LENGTH OF THE DRUM LINE TAPER; TYPICAL FOR DETAILS 1, 2, 3, 4, AND 5.

** THE LATERAL OFFSET REFERS TO THE MINIMUM DISTANCE BETWEEN THE EDGE OF THE NEAREST TRAVELED (OPEN) LANE AND THE TRAFFIC SIDE OF THE ENDING OF THE TEMPORARY BARRIER. THE BARRIER SHALL BE EXTENDED TO THE EDGE OF THE SHOULDER EVEN IF THIS DISTANCE IS BEYOND THE LATERAL OFFSET. IF THE LATERAL OFFSET DISTANCE IS GREATER THAN THE DISTANCE TO THE SHOULDER HINGE LINE, USE DETAIL 2.

DETAIL 1

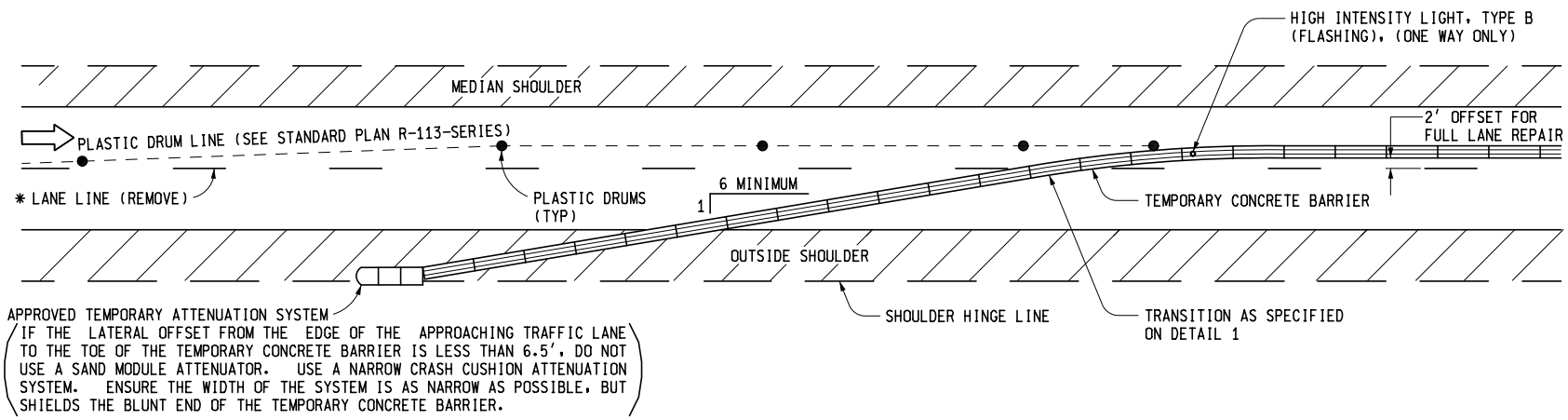

IF THE LATERAL OFFSET FROM THE EDGE OF THE APPROACHING TRAFFIC LANE TO THE TOE OF THE TEMPORARY CONCRETE BARRIER IS LESS THAN 6.5′, DO NOT USE A SAND MODULE ATTENUATOR. USE A NARROW CRASH CUSHION ATTENUATION SYSTEM. ENSURE THE WIDTH OF THE SYSTEM IS AS NARROW AS POSSIBLE, BUT SHIELDS THE BLUNT END OF THE TEMPORARY CONCRETE BARRIER.

DETAIL 2

WHEN DETAIL 1 CANNOT BE USED BECAUSE OF RESTRICTED LATERAL OFFSET

MICHIGAN DEPARTMENT OF TRANSPORTATION
BUREAU OF HIGHWAY DEVELOPMENT STANDARD PLAN FOR

PLACEMENT OF TEMPORARY CONCRETE BARRIER

R-126-I

SHEET 1 OF 5

3-26-2012
PLAN DATE

F.H.W.A. APPROVAL

DEPARTMENT DIRECTOR
Kirk T. Steudle

APPROVED BY: DIRECTOR, BUREAU OF FIELD SERVICES

APPROVED BY: DIRECTOR, BUREAU OF HIGHWAY DEVELOPMENT

PREPARED BY DESIGN DIVISION

DRAWN BY: B.L.T.
CHECKED BY: W.K.P.

MDOT Michigan Department of Transportation

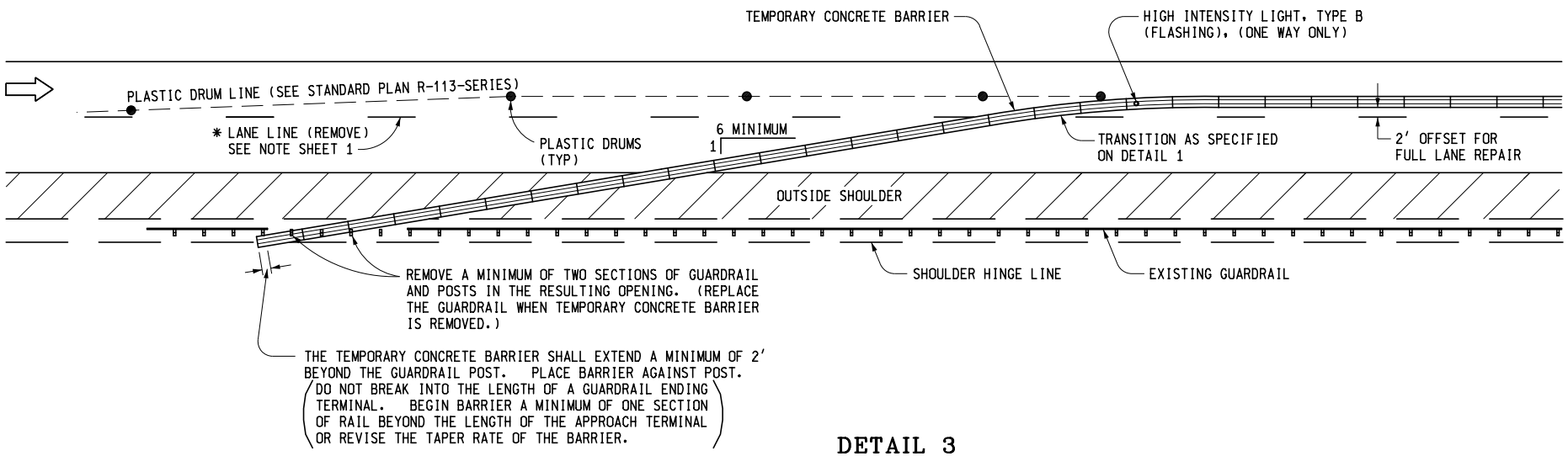

DETAIL 3

(TEMPORARY CONCRETE BARRIER IN GUARDRAIL AREA)

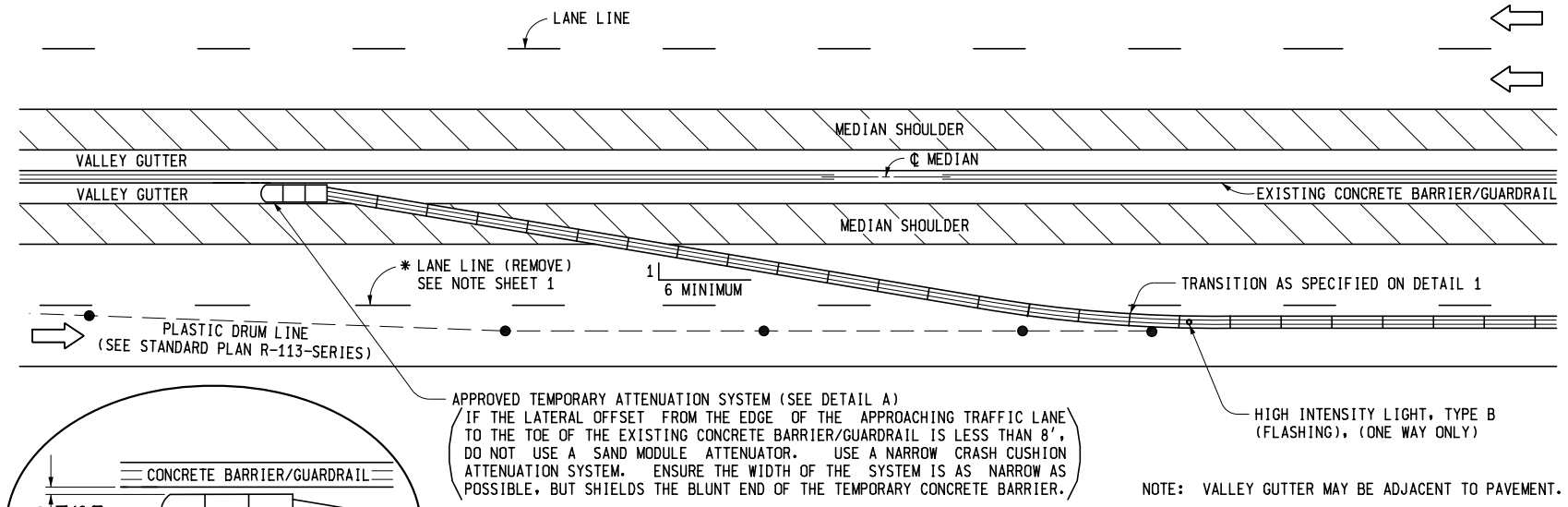

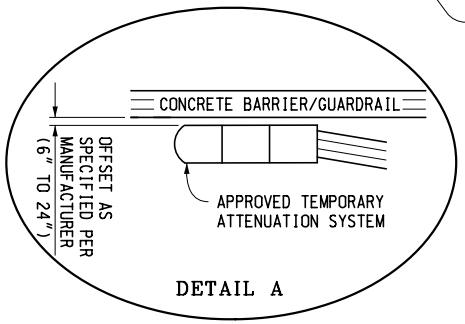

DETAIL 4

(TEMPORARY CONCRETE BARRIER IN CONCRETE MEDIAN BARRIER AREA)

NOTE: SIMILAR TREATMENT MAY BE USED ON SINGLE FACE BARRIER ON OUTSIDE SHOULDER.

MICHIGAN DEPARTMENT OF TRANSPORTATION
BUREAU OF HIGHWAY DEVELOPMENT STANDARD PLAN FOR

PLACEMENT OF TEMPORARY CONCRETE BARRIER

F.H.W.A. APPROVAL	3-26-2012 PLAN DATE	R-126-I	SHEET 2 OF 5

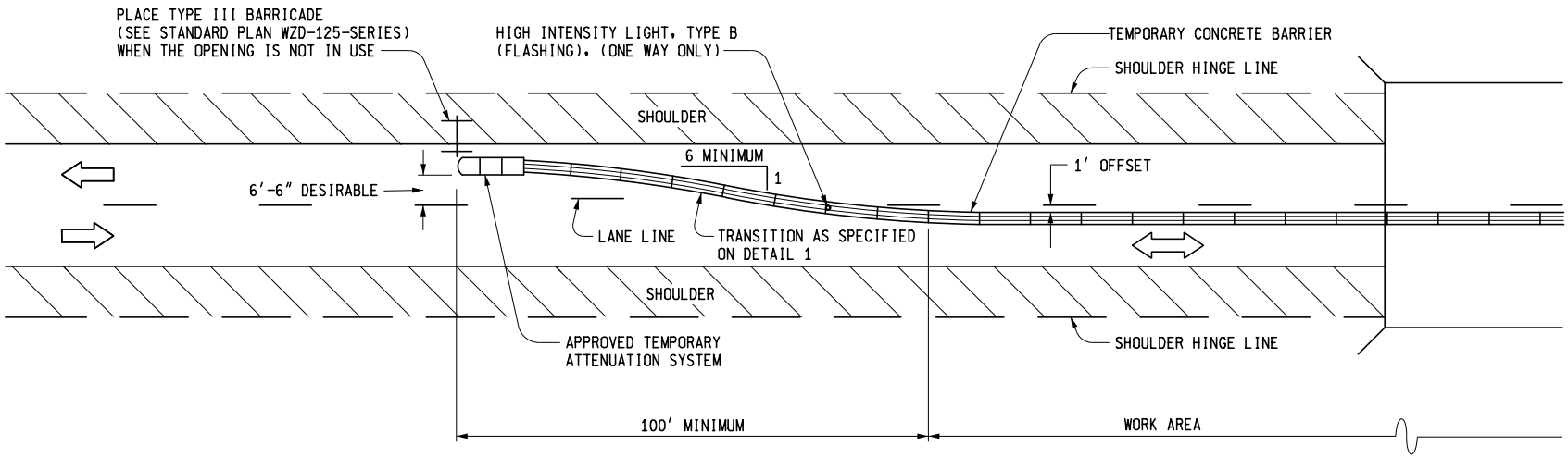

DETAIL 5

(TRAILING END OF TEMPORARY CONCRETE BARRIER ON TWO-WAY ROADWAY)

DETAIL 5 NOTES:

WHERE CONTROLLED BI-DIRECTIONAL TRAFFIC IS MAINTAINED ON A SINGLE LANE, THE PLACING OF TEMPORARY CONCRETE BARRIER ON THE APPROACHING END OF A LANE CLOSURE SHALL BE THE SAME AS SPECIFIED ON DETAIL 1, 2 OR 3. THE TRAILING END OF THE LANE CLOSURE SHALL BE AS SPECIFIED ON DETAIL 5. THE PLASTIC DRUM LINE TAPER WILL BE ACCORDING TO THE CURRENT MICHIGAN MANUAL OF UNIFORM TRAFFIC CONTROL DEVICES OR WITH THE MAINTAINING TRAFFIC PROVISIONS IN THE PLANS OR PROPOSAL. THE TEMPORARY CONCRETE BARRIER END SECTION ON THE TRAILING END OF THE TEMPORARY CONCRETE BARRIER SHALL BE PARALLEL WITH THE TRAFFIC.

BARRIER ON BRIDGE NOTES:

IT IS RECOMMENDED THAT ONE OF THE FOLLOWING METHODS, WHICH ARE LISTED IN ORDER OF PREFERENCE, BE USED WHEN THERE IS LESS THAN 4'-0" LATERALLY BETWEEN THE TOE OF THE BARRIER ON THE TRAFFIC SIDE AND THE DROP-OFF.

1. CONSTRUCT A SLIP-FORMED CONTINUOUSLY STEEL REINFORCED CONCRETE BARRIER.

2. IF THE BARRIER IS TO BE PLACED ON AN EXISTING CONCRETE DECK THAT WILL EVENTUALLY BE REMOVED ANYWAY, DRILL TWO HOLES LARGE ENOUGH FOR #8 STEEL DOWELS OR PEGS TO BE INSERTED INTO THE LOWER SLOPING PORTION OF EACH BARRIER SECTION NEAR EACH END OF THE TRAFFIC SIDE OF THE BARRIER AND CONTINUING INTO THE CONCRETE BELOW. THESE DOWELS SHOULD EXTEND 6" IN THE DECK, AND AT LEAST 6" INTO THE BARRIER, (BUT NOT PROTRUDE ABOVE THE BARRIER SURFACE) AND BE GROUTED, TO PREVENT BOTH SLIDING AND OVERTURNING OF THE BARRIER SECTION.

3. IF BARRIER IS PLACED ON A NEWLY CONSTRUCTED SURFACE, DEVICES FOR ANCHORING THE TEMPORARY CONCRETE BARRIER COULD BE USED, PROVIDED THE ANCHORING DEVICES CAN BE REMOVED FLUSH WITH THE ROADWAY SURFACE WHEN THE BARRIER IS REMOVED.

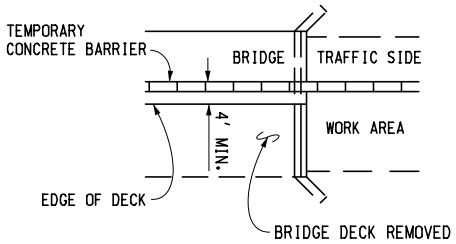

TEMPORARY CONCRETE BARRIER ON BRIDGE
(BRIDGE DECK REPLACEMENT - PART WIDTH)

MICHIGAN DEPARTMENT OF TRANSPORTATION
BUREAU OF HIGHWAY DEVELOPMENT STANDARD PLAN FOR

PLACEMENT OF TEMPORARY CONCRETE BARRIER

F.H.W.A. APPROVAL

3-26-2012
PLAN DATE

R-126-I

SHEET 3 OF 5

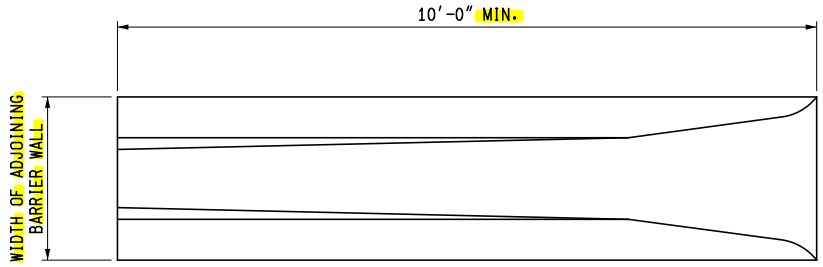

TOP VIEW

NOTES:

HARDWARE USED TO CONNECT THE SLOPED END SECTION TO TEMPORARY CONCRETE BARRIER MUST MEET THE REQUIREMENTS OF NCHRP 350 OR MASH (TEST LEVEL 3 OR HIGHER).

STIRRUP DETAILS PROVIDED FOR ILLUSTRATION PURPOSES. ACTUAL STIRRUP DETAILS WILL VARY BASED ON END SECTION SHAPE, DIMENSIONS, AND STIRRUP LOCATION.

STIRRUPS MUST BE DESIGNED TO PROVIDE A MINIMUM OF 2 INCHES OF CLEAR COVER FROM ANY LOCATION ON THE SURFACE OF THE END SECTION.

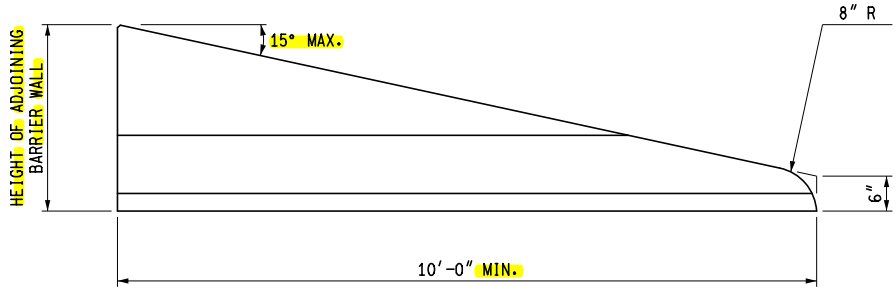

ELEVATION VIEW

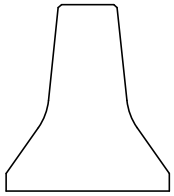

END VIEW

MUST MATCH CROSS-SECTIONAL SHAPE AND DIMENSIONS OF ADJOING BARRIER WALL

TEMPORARY CONCRETE BARRIER SLOPED END SECTION

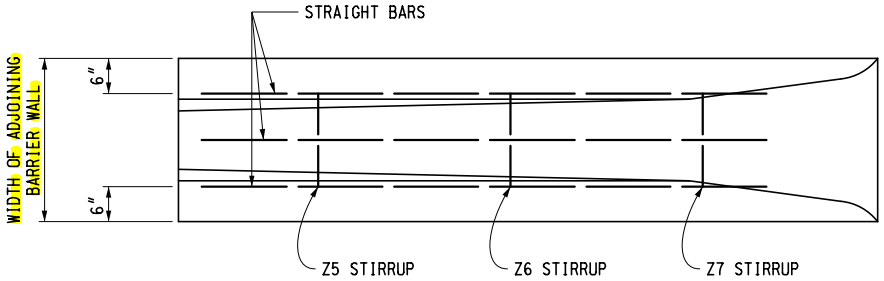

TOP VIEW

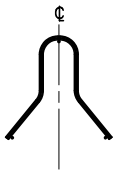

Z5 STIRRUP DETAIL

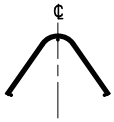

Z6 STIRRUP DETAIL

Z7 STIRRUP DETAIL

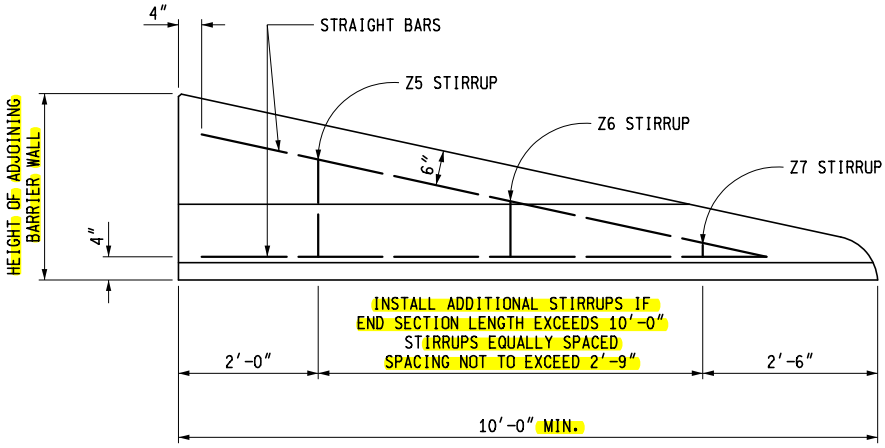

ELEVATION VIEW

STEEL REINFORCEMENT FOR TEMPORARY CONCRETE BARRIER SLOPED END SECTION

NOTE: #5 BARS SHALL BE USED FOR ALL STRAIGHT BARS AND STIRRUPS

MICHIGAN DEPARTMENT OF TRANSPORTATION
BUREAU OF HIGHWAY DEVELOPMENT STANDARD PLAN FOR

PLACEMENT OF TEMPORARY CONCRETE BARRIER

F.H.W.A. APPROVAL	3-26-2012 PLAN DATE	R-126-I	SHEET 4 OF 5

NOTES:

THE SEQUENCE OF BARRIER PLACEMENT SHALL BE IN THE DIRECTION OF TRAFFIC FLOW. BARRIER REMOVAL SHALL BE IN THE DIRECTION OPPOSITE TO TRAFFIC FLOW.

TEMPORARY PORTABLE BARRIER END SECTION SHALL BE USED TO TERMINATE BARRIER ENDS SUBJECT TO APPROACH TRAFFIC, EXCEPT WHEN THE BARRIER IS OTHERWISE ATTENUATED OR TERMINATED BEHIND GUARDRAIL.

DETAIL 2 WILL BE USED WHEN THERE IS NO EXISTING GUARDRAIL OR BARRIER AVAILABLE AS SPECIFIED IN DETAILS 3 OR 4.

THE LOCATION OF THE HIGH INTENSITY LIGHT, TYPE B (FLASHING) SPECIFIED IN DETAIL 1, SHALL APPLY TO DETAILS 2, 3, 4, AND 5. ALSO THE HIGH INTENSITY LIGHT, TYPE B SHALL BE FASTENED ON THE TOP OF THE BARRIER.

THE BARRIER FLARE RATE SHALL BE AT LEAST 6′ OF RUN FOR EVERY FOOT OF OFFSET.

EXACT LATERAL PLACEMENT OF BARRIER MUST BE SPECIFIED ON THE PLANS OR IN THE PROPOSAL. BARRIER POSITION SPECIFIED IS DESIRABLE WHEN WORK AREA INVOLVES THE FULL WIDTH OF THE CLOSED LANE. WHEN PARTIAL LANE WORK IS INVOLVED, OR SHOULDER WORK ONLY, BARRIER SHOULD BE SET INSIDE CLOSED LANE, AS ALLOWED BY WORK AREA, WITH 2′ OR MORE OFFSET DESIRABLE TO LANE LINE.

IN DETAIL 3, EXISTING GUARDRAIL POSTS ARE REMOVED TO FACILITATE PLACING OF TEMPORARY BARRIER BEHIND THE GUARDRAIL. THE DEGREE OF THE BARRIER DEPARTURE ANGLE WILL DETERMINE THE AMOUNT OF BEAM GUARDRAIL AND THE NUMBER OF POSTS TO BE REMOVED.

THE HIGH INTENSITY LIGHT, TYPE B SHALL BE OMITTED WHERE TWO-WAY TRAFFIC IS MAINTAINED ON ONE LANE AND IS CONTROLLED BY TRAFFIC SIGNALS.

MICHIGAN DEPARTMENT OF TRANSPORTATION
BUREAU OF HIGHWAY DEVELOPMENT STANDARD PLAN FOR

PLACEMENT OF TEMPORARY CONCRETE BARRIER

F.H.W.A. APPROVAL	3-26-2012 PLAN DATE	R-126-I	SHEET 5 OF 5

2.03.02 (revised 10-20-2008)

Drainage

Drainage is an important consideration in any highway construction project. Proposed drainage affects the establishment of the gradeline and the development of the typical cross section. Drainage is generally open drainage, using ditches and overland flow; closed drainage, using curb and gutter and enclosed sewers; or some combination of the two. For a complete discussion on drainage, refer to Chapter 4 – Drainage and the ***MDOT Drainage Manual.***

A. Shoulder and Ditch Sections

Shoulder and ditch sections are the norm for open drainage projects. Storm water flows off the pavement, across the shoulder and fore slope, and into the ditch section. The ditch carries the water to a natural outlet. Ditch types include round bottom, valley, berm, toe of slope, "V" ditch and no ditch section. These are all shown on Standard Plan R-105-Series. The ditch section is often influenced by the location of the project, i.e., heavy snow areas would warrant a wider ditch section.

B. Curbed Sections

Curbed sections are most often used in urban situations. They may also be used when right-of-way is limited or in high fills where the curb is used for erosion control. Curbed sections generally drain to an enclosed sewer but sometimes outlet to a downspout or spillway.

Curbed sections are also used for roadside control and at intersections.

2.04 (revised 3-26-2012)

EARTHWORK - GENERAL

Earthwork is the term used to describe operations used in constructing the grading cross section for the proposed roadway. Earthwork has two main components, excavated (cut) and embankment (fill) material. Excavated materials, if suitable, can be moved and used to construct embankments. If on a project, excavated material is not sufficient to construct embankments, additional material or borrow must be brought in. Borrow material and sources are typically the responsibility of the contractor.

Granular materials, used for subbase and swamp backfill, must meet specifications and sources may not be readily available close to the project site. Topsoil is scarce in some areas and material for topsoil surface may have to be transported long distances to the project.

Excavation and embankment quantities are estimated electronically or manually as follows:

Electronically:

1. Extract the existing ground cross sections from survey or photogrammetry Digital Terrain Models (DTM's) at suitable intervals.

2. Use Geopak to compute the proposed (design) cross sections. Modify them if necessary in special areas.

3. Use Geopak to compute the areas of cut and fill at each section and the resulting volumes (Geopak uses the average end area method.)

2.04 (continued)

EARTHWORK - GENERAL

Manually:

1. Obtain the existing cross section from a manual survey or by extracting them from a DTM using Geopak.

2. Plot the original ground and proposed cross sections manually using MicroStation, automated using Geopak, or a combination of both.

3. Use MicroStation to calculate end areas at each cross section.

4. Using the average end area method, calculate the desired volumes of cut and fill, utilizing spreadsheet software.

5. Sum the cut volumes and the fill volumes for the entire project or the specific project locations.

Some areas require special care in plotting sections. For example, ramp intersections with mainline (gore areas) need to have match lines to avoid double estimating of the overlapping cuts or fills. Alternately, export the mainline proposed cross section to the DTM, and create a composite of the proposed mainline and existing ground. Then, extract cross sections from the composite DTM surface, therefore taking into account the proposed mainline roadway.

2.04.01 (revised 11-28-2011)

Excavation

Excavation can be in other forms than regular roadway excavation. Following is a brief description of some of these special or project specific items.

A. Station Grading

This item is often used on projects where normal earthwork items are not practical, or when recommended by Region Construction.

Station grading is typically paid for by feet and requires a special provision. The Designer should include an estimate of excavation and embankment requirements for the Contractor's information for bidding purposes.

B. Trenching

This item is used when a uniform section is to be excavated such as for a widening or reconstructing a shoulder. The excavation is typically a uniform width and depth.

Trenching is a standard specification pay item and because of uniformity an excavation quantity does not need to be estimated.

MICHIGAN DESIGN MANUAL
ROAD DESIGN

CHAPTER 6

INDEX

SURFACING AND SHOULDERS

6.01 PAVEMENT SELECTION PROCESS

6.01.01 References

6.01.02 Equivalent Single Axle Load (ESAL)

6.01.03 Legal Truck Weights

6.01.04 AASHTO Interim Guide

6.01.05 Choice between Aggregate, Hot Mix Asphalt and Concrete

6.01.06 Pavement Design and Selection Policy
- A. Design
- B. Selection

6.01.07 Alternate Pavement Bidding

6.02 AGGREGATE CONSTRUCTION

6.02.01 General

6.02.02 Glossary of Terms

6.02.03 Method of Measurement
- A. Ton
- B. Square Yard
- C. Cubic Yard, LM
- D. Cubic Yard, CIP

6.02.04 Weight of Aggregates

6.02.05 Subbase Stabilization
- A. Purpose
- B. History
- C. Thickness (typical)
- D. Width
- E. Criteria for Use

6.02.06 Open Graded Drainage Course
- A. Purpose
- B. Typical Cross Section
- C. Usage

6.01.05

Choice between Aggregate, Hot Mix Asphalt and Concrete

It is the general practice of the Department to not leave aggregate as a driving surface on a roadway. Therefore, at minimum, a new or existing aggregate road will generally be paved with a single course of hot mix asphalt material, regardless of how little traffic it serves.

Michigan differs from many of the states in having a wide range of soil types, varying from well drained sands to heavy clays, to rock outcroppings. Concrete has the advantage of rigidity and high strength relative to thickness and requires less elaborate mixing facilities at the plant. Hot mix asphalt is flexible, easier to repair, and it requires less time to open to traffic, needing only to cool. The Department tries to utilize the advantages of each material when selecting a pavement type.

Ramps will usually have the same type of surfacing as is used on the freeway. One exception would be when the mainline is overlaid utilizing a different wearing surface material than the existing ramp. In this case, the new mainline surface material may extend up the ramps part-way depending on the condition of the ramps.

6.01.06 (revised 3-26-2012)

Pavement Design and Selection Policy
(Approved by EOC 2-9-2012)

A. Design

Pavement design will be performed using design methods outlined in the "Guide for Design of Pavement Structures", AASHTO, 1993. The design software accompanying AASHTO 1993 is the DARWin pavement design program.

B. Selection

Pavement selection will be determined using the life cycle cost analysis method when the project pavement costs exceed one million dollars as described in the “Pavement Design and Selection Manual.” Pavement costs are determined by separately calculating the cost of paving with both HMA and concrete. When the cost of either the HMA or concrete exceeds one million dollars, a life cycle cost analysis is required. For such projects, Pavement Operations of the Construction Field Services Division will conduct the pavement design and life cycle cost analysis in accordance with the “Pavement Design and Selection Manual.” MDOT staff and industry organizations will be provided an opportunity for review and comment, with final approvals by the Engineering Operations Committee. In accordance with state law, the low cost alternative will be selected.

Pavement designs and the life cycle cost analysis will be done by Pavement Operations for the following project categories.

a. All new/reconstruction projects with pavement costs greater than one million dollars.

b. Major rehabilitation projects (unbonded concrete overlays & rubblized with HMA surfacing) with pavement costs greater than one million dollars.

6.01.06B (continued)

Pavement Design and Selection Policy

Certain fixes known under a different name (e.g. 'inlay') may still require a life cycle cost analysis, regardless of whether it is a 3R or 4R project. Questions should be directed to Pavement Operations. Assistance will be given to the Regions for other projects on an as-needed basis

Life cycle cost analysis will include the cost of initial pavement construction costs as well as maintenance costs over the service life. It will also include calculation of user costs for both initial construction and all future maintenance shown in the maintenance schedules. User costs will be calculated using the software titled "Construction Congestion Cost."

Informational life cycle cost analyses may be conducted for a variety of reasons prior to processing of an official analysis. In addition, some circumstances will require re-analysis, such as scope changes or scheduling delays. Projects must be monitored during project development to ensure that a valid life cycle cost analysis is in place prior to advertisement, and that the correct pavement type has been specified in the plans. The "Pavement Design and Selection Manual" contains details of these and many other aspects of the process.

6.01.07 (new section 3-26-2012)

Alternate Pavement Bidding

At times during pavement selection, the life-cycle cost between the two alternatives may be relatively close and all other design considerations relatively equal. Under these circumstances, bidding the project with alternate pavement options can allow market competition to determine best value.

On September 1, 2011 the Engineering Operations Committee approved a process for the identification and development of alternate pavement bid (APB) candidate projects.

Candidate selection criteria includes;

1. Only freeway projects will be eligible.

2. The project fix type must be either a complete reconstruction or a major rehabilitation (separated concrete overlay or HMA over rubblized concrete).

3. Estimated construction costs must exceed $10,000,000 dollars.

4. Each pavement alternate must be expected to have similar environmental, right of way, drainage, and utility impacts.

5. Maintaining traffic concepts must be similar for both pavement alternates.

6. Paving must be the controlling operation for the construction schedule.

7. If the project meets all the above criteria, the TSC will request an informational LCCA. The proposed pavement designs will be developed using the MDOT Pavement Design and Selection Manual. The life cycle costs of the two pavement design alternates must be within 10%.

MDOT leadership may recommend other projects not meeting the above criteria.

The detailed selection and plan development process for Alternate Pavement Bidding is available on the Plan Development Services website (MDOT only).

MICHIGAN DESIGN MANUAL
ROAD DESIGN

CHAPTER 14

PROCEDURES FOR PLAN PREPARATION

14.01 (revised 3-26-2012)

GENERAL

The following list is a basic outline of the road design plan development process. The sequence is not intended to be a rigid format that must be adhered to, but instead, a guide that is flexible enough to apply to all projects. Small projects may not require all the steps, whereas, large projects may require additional meetings, reviews, etc. to properly develop a complete plan/proposal package with input from all the appropriate disciplines. Project Managers should consider value added versus resources expended when omitting, revising, or adding steps to the process.

Numbers in parentheses after a heading refer to a corresponding or similar PPMS Task Number and/or Milestone Number. For additional information, reference to the PPMS Manual and individual task descriptions is encouraged.

14.02 (revised 3-26-2012)

DESIGN PACKAGE EVALUATIONS

During the plan development process there are several intermediate stages when evaluations of the plans and/or proposal are required. These are to provide feedback to the Project Manager and others who supply information that is included in the plan/proposal package in order to continuously improve the quality of the final package. The evaluations are done for both in-house and consultant designed projects.

Evaluations are entered into a web application, which is periodically sorted and analyzed. Recurring problems are identified and assigned to a team responsible for developing a corrective action, and upon approval, overseeing its implementation.

Please visit the Design Package Evaluation page on the MDOT Web site to register and request access to the Design Package Evaluation DPE application.

The stages at which evaluations are done, who does the evaluations are listed below:

14.02.01 (revised 3-26-2012)

Scope Verification

Evaluation of Concept Statement/Engineering Report Recommendation in Conjunction with Scope Verification

Design Unit Leader/Consultant Coordinator
FHWA Oversight – Optional

14.02.02 (revised 3-26-2012)

Final Right-of-Way

Final ROW Review Submittal Review

Quality Assurance
Development Services Division – Project Development Services
Region/TSC Real Estate Agent

14.02.03 (revised 3-26-2012)

THE Plan Review

Design/Construction Package Evaluation

Quality Assurance
Resident /Delivery Engineer
Project Initiator
Region/TSC System Manager
FHWA Oversight - Optional

14.02.04 (revised 3-26-2012)

Omission/Errors/Check (OEC) Meeting

Design/Construction Package Evaluation

Quality Assurance

14.02.05 (revised 3-26-2012)

Pre Construction Meeting

Design/Construction Package Evaluation

Low Bidder
Resident/Delivery Engineer

14.02.06 (revised 3-26-2012)

Post Construction Meeting

Design/Construction Package Evaluation

Design Unit Leader/Consultant Coordinator
Resident/Delivery Engineer
Prime Contractor
Sub Contractors

14.03

FREEDOM OF INFORMATION

Occasionally information is requested from MDOT by the public under the Freedom of Information Act (FOIA). The information supplied by MDOT is usually limited to those specific items that were requested. If a request asks for "any and all" information on a subject, MDOT is not required to produce volumes of information. This may be handled in one of the following ways:

- Ask for a more specific request.
- Give the name, address and phone number of a contact person and offer the requestor the opportunity to review the material at an MDOT office. Specific documents at this meeting may then be identified, copied and sent to the requestor. An MDOT representative must be present during any office review of material.

14.03.01

Summary

The following summarizes requirements of the Freedom of Information Act:

- Definition. Public Record is a writing prepared, owned, used, in possession of, or retained by a public body in performance of an official function, from the time it is created. A writing is any form of handwritten, printed, photographic, electronic transcription or other means of recording or retaining meaningful content.
- Requests for public records must be written.
- Exempt records: A public body may exempt certain records.
- Personnel records: Portions of personnel records are exempt from disclosure.

14.10 (revised 3-26-2012)

SCOPE VERIFICATION MEETING
(PPMS Task Description 3130)
(PPMS Milestone 312M)

Once a project is assigned, the Project Manager should request from the office that scoped the project, a copy of the scoping documents. These documents may include such items as a completed copy of the appropriate scoping forms and checklists, the project concept statement, pavement coring information, a cost estimate a sketch of the proposed typical cross section(s) and a preliminary survey. The initial PPMS Network should also be available. The Project Manager will then gather the necessary old plans, utility information, traffic data and other useful background information and develop a preliminary cost estimate and compare it to the programmed cost. When sufficient information is available, the Project Manager will request the Region/System Manager to schedule the Scope Verification Meeting.

If this preliminary estimate differs significantly from the programmed cost, the Project Manager should discuss increasing the programmed cost, changing the scope of work and/or reducing the project limits at the Scope Verification Meeting. Consensus should be reached at, or as soon as possible after, this meeting to minimize lost design time and to avoid a possible delay of the project

Prior to or at the Scope Verification Meeting the Project Manager should verify that the "Pavement Design and Selection Policy" has been followed as described in Section 6.01.06. Depending on the type of fix and estimated paving cost, a Life Cycle Cost Analysis (LCCA) may also be required. If the procedure has not been followed, the Project Manager should contact the Pavement Design Engineer or Region/TSC Soils Engineer to initiate adherence to the policy.

14.10 (continued)

In order to insure that everyone understands and agrees with the proposed scope of work, it is essential that all the disciplines and work centers that will be involved in the development of the project be invited to this meeting. This will minimize possible "scope creep" and reduce the number of redesigns by verifying and documenting the scope of work as early as possible in the design process. Recommended attendees include:

- Project Manager
- Unit Leader(s)
- Environmental - Project Planning Division (BTP)
- Geometrics Unit
- Construction Field Services Division
- FHWA (FHWA Oversight)
- System Manager
- Region/TSC
  - Design/Development / Engineer
  - Traffic and Safety
  - Soils/Materials
  - Utilities/Permits
  - Resident/Delivery Engineer
  - Maintenance
  - Development Services Division (if applicable)
  - Survey (if applicable)

The Project Manager will write and distribute the meeting minutes. Copies should be sent to the Region/TSC System Manager, the Environmental Section in the Bureau of Transportation Planning and all attendees to the meeting.

If this meeting results in a revised scope of work and/or an increase in the project cost, it is the responsibility of the office that originally scoped the project to revise the project scope and/or schedule and request reprogramming of the project.

14.15 (continued)

CHANGE REQUEST (REVIEW OF PROJECT SCOPE, COST AND SCHEDULE)

- Any change to a currently programmed phase that is not of the type indicated in the first 3 above, may be submitted electronically through MPINS.

- Any general project information changes to currently programmed projects may be submitted electronically through MPINS.

If a revision to a project includes requests for items which may be submitted electronically and items which must be submitted through the paper process, the requests should be combined and processed through the paper process.

14.16

REQUEST FOR UTILITY INFORMATION AND UTILITY COORDINATION

(PPMS Task Description #3610)
(PPMS Milestone M311)

Once the scope of work and project limits are verified, the Project Manager must request existing utility locations from each utility company. This is done by submitting a set of base plans with a proposed description of work and project limits to their designated staff person with access to the Utility Relocation Tracking System(URTS). The URTS program indicates the number of utility companies having facilities within a given control section. Two sets of plans are then distributed to each utility company with a completed *Preliminary Request for Utility Information* form. The utility companies either return a set of plans with existing utility locations marked on the plans, or notification of no existing facilities in the area, to the Region/TSC Utility Coordinator. The Region/TSC Utility Coordinator reviews, documents and forwards the information/plans to the Project Manager.

14.16 (continued)

All private and public utilities should be shown on the plans. The utilities may appear on separate utility sheets and/or be shown on the removal sheets.

When removal sheets are cluttered and it becomes difficult to easily identify the type and location of utilities, then separate utility sheets should be considered. These utility sheets can be incorporated in the final plans showing the disposition of each utility, whether out of service, removed, relocated, etc.

Additional information concerning this subject is included in Chapter 9.

14.17

SUBSURFACE UTILITY ENGINEERING (SUE)

(PPMS Task Description #3610)
(PPMS Milestone M311)

On projects likely to involve numerous utility conflicts the Project Manager may elect to use a Subsurface Utility Engineering (SUE) consultant contract to locate utility locations. The Project Manager should contact the Utilities-Permits Section for assistance in determining if SUE would be beneficial.

14.18 (revised 3-26-2012)

PAVEMENT DESIGN

After the scope verification meeting, the Project Manager should determine the estimated pavement costs of the project. Depending on the type of work and estimated cost, a Life Cycle Cost Analysis (LCCA) may be required. This along with the actual pavement design will be done by either the Region/TSC Pavement Design Engineer or the Operations Unit of the Construction Field Services Division – Pavement Operations. Those done by the Operations Unit must be submitted for approval to the Engineering Operations Committee (EOC). See Section 6.01.06.

14.30 (revised 2-18-2010)

PRELIMINARY CONSTRUCTABILITY REVIEW
(PPMS Task Description 3565)

Constructability is taken into account during the scoping and early plan development process (and in conjunction with the Early Project Scoping Constructability Checklist). After the Job Concept Statement has been created in MPINS, the Project Manager/Concept Author should consult with the Region/TSC Delivery Engineer concerning items such as Coordinating with other Agencies, Permits, Staging, Maintaining Traffic, Site Investigation, and Right of Way. Much of the work under this task should occur before the Scope Verification Meeting. On small projects this task may consist of only the transmittal of base plans to the Resident/Delivery Engineer for comment. On large projects with complex staging, one or more meetings with the Resident/Delivery Engineer and Region/TSC Traffic and Safety Engineer may be required throughout this task. In both instances the review and incorporation of any comments must occur prior to Preliminary Plan Development.

14.31 (revised 3-26-2012)

ENVIRONMENTAL REVIEW AND CLEARANCE

Environmental review and clearance is a two step process: Environmental Classification (PPMS Task 3150) and Environmental Certification (PPMS Task 3155).

14.31.01 (new section 3-26-2012)

Environmental Classification
(PPMS Task 3150)

Environmental Classification is required by the National Environmental Policy Act (NEPA). All projects must be reviewed for potential environmental impacts and classified according to the significance of those impacts. Class I Actions are those projects with significant environmental impacts and require the preparation of an Environmental Impact Statement (EIS). Class II Actions have minor or no environmental impacts and require Categorical Exclusion (CE) documentation (Form 1775-LAP). Class III Actions are projects where the significance of the impacts is not known and require the preparation of an Environmental Assessment (EA).

Most projects are classified as CEs. However, environmental review is still required to identify non-significant environmental impacts, and establish measures to mitigate those impacts. Measures to mitigate can include avoidance, design changes, protective measures, or replacement. Establishing mitigation measures can be complex and require coordination with state, federal and local resource agencies. Often, mitigation measures can be developed through collaboration between the Project Manager (PM) and MDOT Environmental Staff.

14.31.01 (continued)

Environmental Classification

The Environmental Clearance Coordinator (ECC) will contact the PM about one year prior to the Base Plan Date (BPD), or upon notification of project programming (Form 2604) for projects of short development duration. The ECC will request information about the scope and location of the project. This information can include the extent of grading and filling, right of way requirements, detour information, etc., and is critical in assessing project environmental impacts. The project description, location, and other pertinent project information are put on the Environmental Classification (Form 1775-LAP). MDOT Environmental Staff may contact the PM for more details about the project in order to assess impacts.

Once impacts are assessed, collaboration occurs between the PM and MDOT Environmental Staff, to develop mitigation measures. The goal of collaboration is to develop measures that both allow the project to accomplish its transportation goal and minimize impacts to the environment. Once impacts are identified and mitigation measures established the project can be classified as a CE. The PM will be notified and the Environmental Classification (Form 1775-LAP) and supporting documentation will be stored in ProjectWise under the Project Job Number. Classification is also recorded in the MAP database (MPINS/MFOS/REMIS). Classification is scheduled to occur on or before the completion of Base Plan Review (PPMS Task 3380).

14.31.01 (continued)

Prior to completions of the NEPA review process, preliminary engineering and other activities and analyses must not materially affect the objective consideration of alternatives in the NEPA review process. FHWA defines Preliminary Design as activities that define the general project location and design concepts. It includes, but is not limited to, preliminary engineering and other activities and analyses, such as environmental assessments, topographic surveys, metes and bounds surveys, geotechnical investigations, hydrologic analysis, hydraulic analysis, utility engineering, traffic studies, financial plans, revenue estimate, hazardous materials assessments, general estimates of the types and quantities of materials, and other work needed to establish parameters for the final design.

If the information required for classification requires engineering work or environmental coordination extending beyond the BPD, the FHWA will allow preliminary engineering tasks to extend up to the Plan Review upon notification from the ECC. Projects permitted to continue beyond the BPD prior to classification must be approved by the Bureau of Development Environmental Manager and include:

14.31.01 (continued)

Environmental Classification

PPMS Task	Task
3535	Conduct Structural, Architectural and Aesthetic Review
3570	Prepare Preliminary Structure Plans
3565	Preliminary Constructability Review
3540	Develop Maintaining Traffic Plans
3555	Prepare/Review Preliminary Traffic Signal Operations
3551	Preliminary Signal Plans
3552	Preliminary Permanent Pavement Markings
3553	Preliminary Non-Freeway Signs
3554	Preliminary Freeway-Signs
3580	Develop Preliminary Plans
3590	Review Preliminary Plans
352M	The Plan Review
3670	Develop Municipal Utility Plan
3675	Develop Electrical Plans
3505	Preliminary Pavement Design and Selection
3672	Develop Special Drainage Structure Plan
3560	Conduct Preliminary Geometrics and Roadside Safety Reviews
3610	Compile Utility Information
360M	Utility Conflict Resolution Plan Distribution
3660	Resolve Utility Issues
361M	Utility Meeting
3510	Perform Roadway Geotechnical Investigation
3630	Prepare and Process Participation/Special Operational Agreements

14.31.01 (continued)

Environmental Classification

The Bureau of Development Environmental Manager will report to FHWA each quarter of the fiscal year the number of projects that have allowed any of the tasks noted above to be performed before the environmental classification.

Final design or right of way acquisition cannot proceed prior to classification. FHWA defines final design as any design activities following preliminary design and expressly includes the preparation of final construction plans and detailed specifications for the performance of construction work.

Between base plans and quality assurance review, environmental mitigation measures are to be fully developed and detailed in the plan package.

14.31.02 (new section 3-26-2012)

Environmental Certification (PPMS Task 3155)

Environmental Certification is the final step in the Environmental Review and Clearance Process. This task takes place during Project Plan Quality Assurance Review (PPMS Task 3865). During Certification, plans and other documents are reviewed to ensure that all areas of concern are avoided, all mitigation measures are in place, and all commitments adhered to. This review is conducted by the ECC and documented (Form 2002).

If all mitigation measures are in place and all commitments adhered to, the project will be certified. The PM will be notified and Environmental Certification Form (Form 2002) and supporting documentation will be stored in ProjectWise under the Project Job Number. Certification is also recorded in the MAP database (MPINS/MFOS/REMIS).

14.32 (revised 3-26-2012)

MDOT ENVIRONMENTAL PERMITS

Permits from the Michigan Department of Environmental Quality (MDEQ), the Michigan Department of Natural Resources (MDNR) and/or the Army Corps of Engineers are required for projects that involve work in wetlands, inland lakes, streams, drains, flood plains, critical sand dune areas along the shores of the Great Lakes and navigable rivers/harbors. A current summary of the most frequently needed environmental permits is listed below:

Michigan Act 451, Natural Resources and Environmental Protection Act of 1994

- Part 31: Water Resource Protection (including NPDES and Flood plain Authority)
- Part 91: Soil Erosion and Sediment Control
- Part 301: Inland Lakes and Streams
- Part 303: Wetland Protection
- Part 365: Endangered Species Protection

Federal Section 404: Clean Water Act of 1972
Federal Section 10: River and Harbor Act of 1899

The Environmental Section in the Project Planning Division determines which regulations apply to a specific project and can help make recommendations for the project to better address the applicable policies. To make such determinations, project scope, location and a set of plans are required. The review may also involve field inspections or wetland delineation. The Environmental Section is also responsible for submitting the appropriate paperwork to the regulatory agencies for permits.

14.58 (revised 3-26-2012)

APPROVAL OF SPECIAL PROVISIONS

In order to clarify terminology surrounding this subject, the following definitions are provided:

1. Standard Specifications.- The book of specifications approved for general application and repetitive use.

2. Supplemental Specifications.- Detailed specifications that add to or supersede the Standard Specifications.

3. Special Provisions.- Revisions or additions to the Standard and Supplemental Specifications applicable to an individual project.

4. Frequently Used Special Provisions.- An approved special provision with stable requirements applicable to a number of projects used on a regular basis.

5. Addendum - a change, addition and/or deletion to the contract documents occurring after a project is advertised but before the letting date.

Occasionally, information in the plan/proposal package may differ or conflict. To help in resolving such conflicts, the following order of preference has been established per the 2012 Standard Specifications for Construction:

1. All proposal material except those listed in subsections 104.06B through 104.06F
2. Special Provisions
3. Supplemental Specifications
4. Project Plans and Drawings
5. Standard Plans
6. Standard Specifications

14.58 (continued)

All unique special provisions that are part of the proposal must have the approval of the Design Division prior to contract printing and advertising. These do not include the Frequently Used Special Provisions, which are reviewed and approved before they are placed on the list. The Project Manager should submit any unique special provisions to the Specifications Engineer in the Design Division as soon as possible for their review and approval (at least 30 days prior to the plan completion date). Submittals ***must*** be submitted electronically in WordPerfect format. Consultant Special Provisions will follow the same format and submittal procedure and will be the responsibility of the Consultant Project Manager. Drafts of these should be available for review and discussion at THE Plan Review meeting.

Project Managers are encouraged to use previously approved Special Provisions whenever possible. To review an index of available approved Special Provisions, see the Previously Approved Special Provisions page on the MDOT Web site. If any changes are made to the approved document, it must be saved with another filename. When submitting a revised (previously approved) Special Provision, the redline and strikeout features under MSWord should be used to delineate the changes made to the original document. This will substantially expedite the approval process.

For additional information regarding Special Provisions including a sample format see Chapter 11 (Specifications and Estimates) of the Road Design Manual.

CHAPTER 12 REHABILITATION PROJECTS (continued)

12.05 RAILING UPGRADING

12.05.01 Approved MDOT Railings (5-1-2000)

12.05.02 Existing Railings and Upgrading Options

12.05.03 Horizontal Curvature

12.05.04 Revisions to Guardrails

12.06 JOINT REPLACEMENT

12.06.01 Expansion Joint Devices

12.06.02 Felt-Type Joints

12.06.03 Revisions to Deck Joints (5-1-2000)

12.07 PAINTING

12.07.01 Blast Cleaning

12.07.02 Substructure Protection

12.07.03 Pins and Hangers

12.07.04 End Diaphragms (8-6-92)

12.07.05 Cleaning and Coating Exposed Steel (5-1-2000)

12.07.06 Performance Warranties for Bridge Painting (5-1-2000)

12.07.07 Paint Color (5-1-2000)

12.07.08 MDEQ Hazardous Waste Number (5-1-2000) (3-26-2012)

12.07.09 A588 Steel Beams

12.07.10 Partial Painting (3-26-2012)

CHAPTER 12 REHABILITATION PROJECTS (continued)

12.08 MISCELLANEOUS REHABILITATION

12.08.01 Field Inspections

12.08.02 Concrete Repair - General (10-24-2001)

12.08.03 Substructure Repairs

12.08.04 Repair of Overhead Concrete Surfaces

12.08.05 Expansion Anchored Bolts

12.08.06 Deck Patching (5-1-2000)

12.08.07 Temporary Support Systems (8-6-92)

12.08.08 Roadway Widening With Filler Walls (3-26-2012)

12.09 BRIDGE DECK REPAIR STRATEGY (8-6-92) (3-26-2012)

12.09.01 Deck Restoration

12.09.02 Bridge Deck Preservation Matrix (10-24-2001)

Appendix 12.01.01 Detroit Metropolitan Area (8-6-92)

Appendix 12.02 Clear Roadway Widths and Design Loading (9-1-88)

Appendix 12.02.01 Design Exception Requirements - Vertical Clearance (5-1-2000)

Appendix 12.03.01 A. Request For Traffic Information (Form 1730) (5-1-2000)

Appendix 12.03.01 B. Sample request for Accident Analysis and Safety Review (5-1-2000)

Appendix 12.09.02 Bridge Deck Preservation Matrix (5-1-2000)

12.03

DESIGN EXCEPTIONS

Design Exceptions shall be identified and completed during the Scope Verification Process. Submittals of Design Exceptions on a timely basis are essential to maintain the project schedule and provide an approved design where conditions may inhibit designers from meeting the required design criteria. (8-20-2009)

(9-1-88) When a proposed structure rehabilitation financed by federal funds will not upgrade the structure to minimum standards (design criteria), the Project Manager should complete the appropriate portions of the Design Exception Request Form FC-26 (see http://mdotwas1.mdot.state.mi.us/public/webforms/public/FC26.pdf and http://mdotwas1.mdot.state.mi.us/public/webforms/public/FC26INST.pdf). For projects with "FHWA Oversight" (formerly known as non-exempt projects) submit this form to the Engineer of Design Operations - Structures Section and subsequently to the FHWA Area Engineer. For projects with "MDOT Oversight" (formerly known as exempt projects) submit the form to the Engineer of Design Operations - Structures Section. If approved, the appropriate entity will return a copy, signed and dated. Reference to this approval should be made in our subsequent transmittal of preliminary plans. A signed copy of the Design Exception Request form should be placed in the project file. (12-5-2005)

When a proposed road rehabilitation project financed by federal funds contains a bridge not conforming to minimum standards, and no work is proposed for the bridge, the road Design Engineer/Project Manager will prepare the design exception request for transmittal to the Engineer of Design and subsequently to the FHWA Area Engineer. This includes non interstate bridges not being altered on road projects which do not meet new/reconstruction criteria (standards). (8-20-2009)

12.03.01

Requests for Traffic Volumes and Crash Histories

(9-1-88) When requesting traffic volumes and crash histories, the Design Engineer should advise the appropriate Division or Support Area as to when the response is needed to meet the schedule for plan preparation. The request should also identify any other work included within the project limits, e.g., additional bridges or road construction.

A. Traffic Volumes

Send requests for traffic volumes to the Bureau of Transportation Planning, Project and Plan Development Division using MDOT form 1730 (see http://mdotwas1.mdot.state.mi.us/public/webforms/public/1730.pdf or Appendix 12.03.01 A.) (5-1-2000)

B. Crash Histories

Send requests for crash histories to the appropriate Region or Lansing Traffic and Safety personnel. (See sample submittal in Appendix 12.03.01 B.) (9-2-2003)

Where underclearance is the only design exception, however, the concern about crashes is limited to impacts from high loads. This history and the approximate traffic volume are most expeditiously obtained from the Bridge Management Unit of Design Division. (8-6-92) (3-26-2012)

12.07.04

End Diaphragms

(8-6-92) On field inspections of structures scheduled for painting, the designer should consider accessibility behind end diaphragms for cleaning and painting. If the end diaphragms are within 1'-2" of an abutment backwall (or if the end diaphragms at a pier are too close) and the slab above the diaphragms is not to be removed, the diaphragms shall be removed to permit proper cleaning and coating.

Plans shall include an acceptable system for shoring the slab while the diaphragm is not in place. It should be noted that the contractor may use an alternate shoring system subject to the engineer's approval.

Where end diaphragms must be removed for cleaning and painting, note 8.09.04 I should be placed on the plans and the Special Provision for Removal and Replacement of End Diaphragms should be included in the contract proposal. (8-20-2009)

12.07.05

Cleaning and Coating Exposed Steel

(8-6-92) Where structural steel has been exposed by the removal of deck concrete, it shall be cleaned and coated. Cleaning and Coating shall be according to the Standard Specifications for Construction or Special Provisions.

Construction sequencing (painting after casting deck) of deck replacement projects with steel beams requires the use of the pay item, “Top Flanges and Beam Ends, Clean and Coat”, even if the project requires total beam painting. (8-20-2009)

12.07.06

Performance Warranties for Bridge Painting (5-1-2000)

Whenever possible, performance warranties shall be required on bridge painting contracts. On non-National Highway System bridges (NHS) the Design units shall include the performance specification in the contract. A trunkline project can be considered non-NHS, even though it may have NHS funding, if the facility carried is non-NHS.

If the facility carried is NHS traffic, the performance warrantee specification may still be applicable. The Design units shall contact the Construction Field Services Coatings Specialist, at the preliminary plan stage, to determine whether the bridge can be added to Special Experimental Projects list for warranty painting. (3-26-2012)

12.07.07

Paint Color (5-1-2000)

The Standard color for MDOT bridges is Gray. The Federal Standard 595B number for this color is 16440. Previously, the MDOT standard color was Light Blue - number 15488. Other Federal Standard colors may be recommended by the Region.

12.07.08

MDEQ Hazardous Waste Number
(5-1-2000) (3-26-2012)

All structures scheduled for painting need a Michigan Department of Environmental Quality (MDEQ) hazardous waste number (MIR number). These numbers are supplied by the Bridge Management Section of Design Division. See also Section 14.04.

12.04 (continued)

12.04.06

Concrete Overlays (5-1-2000)

MDOT uses the following two strategies for concrete overlays (also see Section 12.09.02 and the Bridge Deck Preservation Matrix):

A. Shallow Overlays

Shallow overlays are a medium term fix. They are designed to last approximately 10 to 15 years.

Shallow overlays consist of a latex modified, or silica fume modified concrete overlay mixture placed a minimum of 1½" in thickness. This is placed after the existing deck has been scarified (¼") and hydrodemolished (¾").

B. Deep Overlays

Deep overlays are a long term fix. They are designed to last 20 to 30 years depending on the condition of the existing deck.

Deep overlays consist of a silica fume modified concrete overlay. It is placed on the existing deck after it has been scarified and hydrodemolished.

It is desirable to completely encapsulate the top mat of reinforcing steel in the deep overlay. However, it is difficult to know the precise location of the mat before hydrodemolishing the deck. In addition, the thickness of the existing deck will influence the amount of concrete removed.

The deep overlay thickness and procedures varies depending on the thickness of the existing bridge deck(excluding any existing overlay).

For decks 7½" or less in thickness, the deck is scarified ¼" and hydrodemolished 2¾" or to ¾" below the top mat of steel, whichever is less. The overlay is a minimum of 3" in thickness. (10-24-2001)

12.04.06 B. (continued)

For decks greater than 7½" in thickness, the deck is scarified ¼" and hydrodemolished 3¾" or to ¾" below the top mat of steel, whichever is less. The overlay is a minimum of 4" in thickness. (10-24-2001)

12.04.07

Hot Mix Asphalt (HMA) Overlays and Caps (12-5-2005)

In general, an HMA overlay or cap is not a preferred treatment for bridge decks. Where a bridge is scheduled for a deck replacement within two years, an HMA cap is an acceptable means of obtaining rideability.

Where HMA is used for a longer term overlay (five years or more) the designer must incorporate a waterproofing membrane in the design (see the Standard Specifications). Also see Section 12.04.

Where an HMA mix has not been specified as part of a road project, the project manager should consult the Construction Field Services Bituminous Pavement Unit for an acceptable HMA. (3-26-2012)

12.04.08

Approaches (5-1-2000)

To eliminate approach pavement settlement, a concrete approach section will be used for all concrete overlays. For hot mix asphalt (HMA) deck overlays, a concrete approach is not necessary. (3-26-2012)

The details of the approach slab shall be as specified on Standard Plan R-45-Series except on existing structures where the grade will not be raised; the length of the approach slab shall match the existing approach slab joint.

The transverse limits of the approach section shall extend to the concrete curb and gutter.

12.05.03

Horizontal Curvature

Where a structure is on a horizontal curve with a radius less than or equal to 950 feet, consideration should be given for a special railing system to accommodate sight distance. This may require the complete removal and replacement of the existing railing system.

12.05.04

Revisions to Guardrails

When a bridge railing is replaced with a new railing, all approach and trailing guardrails shall be changed to meet current standards. Guardrail having corrosion resistant (rusty steel) beam elements shall be replaced. Where obsolete guardrail extends a considerable distance from the structure and complete replacement would result in a major project cost increase, safety funds should be requested from the Design Division Safety Programs Section for its replacement. If funds are not granted, guardrail replacement should be limited to 200'-0" in each quadrant.
(8-6-92) (3-26-2012)

BRIDGE DECK PRESERVATION MATRIX

DECK CONDITION STATE				REPAIR OPTIONS	POTENTIAL RESULT TO DECK BSIR		NEXT ANTICIPATED EVALUATION
Top Surface		Bottom Surface			Top Surface BSIR #58a	Bottom Surface BSIR #58b	
BSIR #58a	Deficiencies % (a)	BSIR #58b	Deficiencies % (b)				
≥ 5	N/A	N/A	N/A	Hold (c) Seal Cracks/Healer Sealer (d)	No Change	No Change	1 to 8 years
	≤ 5%	> 5	≤ 2%	Epoxy Overlay	8, 9	No Change	10 to 15 years
	≤ 10%	≥ 4	≤ 25%	Deck Patch (e)	Up by 1 pt.	No Change	3 to 10 years
4 or 5	10% to 25%	5 or 6	≤ 10%	Deep Concrete Overlay (h)	8, 9	No Change	25 to 30 years
		4	10% to 25%	Shallow Concrete Overlay (h, i)	8, 9	No Change	10 to 15 years
				HMA Overlay with water-proofing membrane (f, h, i)	8, 9	No Change	8 to 10 years
		2 or 3	> 25%	HMA Cap (g, h, i)	8, 9	No Change	2 to 4 years
≤ 3	>25%	> 5	< 2%	Deep Concrete Overlay (h)	8, 9	No Change	20 to 25 years
		4 or 5	2% to 25%	Shallow Concrete Overlay (h, i)	8, 9	No Change	10 years
				HMA Overlay with water-proofing membrane (f, h, i)	8, 9	No Change	5 to 7 years
		2 or 3	>25%	HMA Cap (g, h, i)	8, 9	No Change	1 to 3 years
				Replace Deck	9	9	40+ years

(a) Percent of deck surface area that is spalled, delaminated, or patched with temporary patch material.
(b) Percent of deck underside area that is spalled, delaminated or map cracked.
(c) The "Hold" option implies that there is on-going maintenance of filling potholes with cold patch and scaling of incipient spalls.
(d) Seal cracks when cracks are easily visible and minimal map cracking. Apply healer sealer when crack density is too great to seal individually by hand. Sustains the current condition longer.
(e) Crack sealing can also be used to seal the perimeter of deck patches.
(f) Hot Mix Asphalt overlay with waterproofing membrane. Deck patching required prior to placement of waterproofing membrane.
(g) Hot Mix Asphalt cap without waterproofing membrane for ride quality improvement. Deck should be scheduled for replacement in the 5 year plan.
(h) If bridge crosses over traveled lanes and the deck contains slag aggregate, do deck replacement.
(i) When deck bottom surface is rated poor (or worse) and may have loose or delaminated concrete over traveled lanes, an in-depth inspection should be scheduled. Any loose or delaminated concrete should be scaled off and false decking should be placed over traveled lanes where there is potential for additional concrete to become loose.

BRIDGE DECK PRESERVATION MATRIX
USER GUIDELINES

This matrix is a tool for Bridge Engineers to use in the selection of deck repair options. The condition of the deck is usually the driving force, or the key indicator, leading to a structure being considered for rehabilitation or replacement. However, there are times when other issues affecting the bridge may elicit the need for a rehabilitation project and this matrix does not address those situations. Some of these situations are super-structure deterioration, sub-structure deterioration, and functional issues such as under-clearance and/or bridge width. Sometimes it is desirable for an entire corridor to be brought up to a specific condition level as part of an overall strategy. So the user is cautioned to interpret the information from the matrix in the context of each specific case and use engineering judgment.

The matrix can be used from left to right or from right to left. If you have scoping inspection data with a deck delamination survey, select the row in the left column that matches the percent of surface defects. Then select the row in the second column that matches the percent of underside defects. To the right of this you will find a repair option and the associated changes to the NBI and the expected service life of that repair.

If you are looking for a fix that will last for a given period of time, select a row from the right column that matches the length of service desired and scan to the left to find the repair option. Be advised that the condition of the bridge at the time of the rehabilitation affects the expected service life of the selected repair option. So if the structure is in worse condition than shown on the left side of the matrix, the repair will not last as long. Conversely, if the deck is in better condition than shown on the left, a longer service life could be expected.

This matrix has been constructed based on the best knowledge of individuals from Construction Field Services and Design Divisions, Division of Operations, and FHWA with many years of experience working with bridges. When used in conjunction with the Bridge Safety Inspection Report (BSIR), Pontis CoRe Element Data, and Detailed Bridge Project Scoping Report, the matrix can be an accurate guide in the majority of situations and will lead to a repair option that is economical and consistent with the Departments goals. (3-26-2012)

12.07 (continued)

12.07.09

A588 Steel Beams (9-2-2003)

The following rehabilitation situations exist for A588 beams:

1. Little or no section loss (< 20%), painting is not required.

2. Significant section loss (≥ 20%), the entire structure is painted. This includes projects with beam end repairs.

3. Pin and hanger projects where beams are otherwise in good condition (< 20% section loss), beams are zone painted (with the outside of the fascia beams top coated brown in the zone area).

12.07.10

Partial Painting

Where structural steel cleaning and coating involves only partial sections of beams or diaphragms the entire perimeter of the beams or diaphragms, less any portions encased in concrete, shall be cleaned and coated. Cleaning and Coating shall be according to the Standard Specifications for Construction or Special Provisions. (3-26-2012)

12.08

MISCELLANEOUS REHABILITATION

Some miscellaneous rehabilitation is significant and is programmed for the specific purpose. More frequently, miscellaneous work is an adjunct to other work. As such, its nature and cost should be determined as early as possible so that the primary project programming can be adjusted.

Include saw cut depth dimensions when removing portions of abutments, piers and columns on the plans. (8-20-2009)

12.08.01

Field Inspections

THE Plan Review Meeting with a field inspection should be conducted on all rehabilitation projects. This inspection should be made within six months of the contract letting to most accurately determine the extent of deterioration. If a project is postponed, it may be necessary to conduct a second inspection.

12.09

BRIDGE DECK REPAIR STRATEGY (3-26-2012)

12.09.01

Deck Restoration

Restoration of deteriorated decks includes everything from crack sealing to complete replacement. The alternative selected will be influenced by the factors listed in the Bridge Deck Preservation Matrix (Section 12.09.02) and by judgment. The Construction Engineer should be consulted in most cases as he/she is aware of current costs, equipment, and contractor capability.

At locations where traffic volumes are high, the maintenance of traffic may influence the selection of the restoration treatment.

The Region Project Development Engineer will consider future work in the area. This may influence the repair strategy. It should be recognized that several years will elapse between the inspection/scoping and the work of rehabilitation. Allowance for additional deterioration during this period should be made when selecting an appropriate rehabilitation measure. (5-1-2000)

12.09.02

Bridge Deck Preservation Matrix
(5-1-2000)

The Bridge Deck Preservation Matrix, listed in Appendix 12.09.02, gives recommended repair methods for various deck conditions. The repair strategies are based on National Bridge Inventory ratings provided from bridge inspection and scoping documents.

In general, the condition of the underside of the deck is of primary concern. Deck with sound undersides can be rehabilitated to a nearly “new” condition. The repair strategies for these structures will vary from patching and crack sealing for decks with good top surfaces, to deep overlays for decks with poor top surfaces.

Decks with undersides in poor conditions are either replaced, or repaired with a shorter term “fix.” This fix varies from a shallow concrete overlay to a hot mix asphalt (HMA) cap.
(9-2-2003)

MICHIGAN DESIGN MANUAL
BRIDGE DESIGN

CHAPTER 12

REHABILITATION PROJECTS

12.00

REHABILITATION PROJECTS (9-1-88)

For the purpose of this volume, the following definitions will be used:

Preventive maintenance work is defined as bridge activities that will repair and preserve the bridge. Projects where only this work is done do not have to include geometric enhancements. This is done with the understanding that future rehabilitation or reconstruction projects will contain appropriate safety and geometric enhancements, thus Design Exceptions are not required for preventive maintenance work. These activities include joint replacement, pin and hanger replacement, complete painting, zone painting, thin polymer overlays, deck patching, asphalt overlay, hot mix asphalt (HMA) cap and scour countermeasures. (9-2-2003)

Rehabilitation (3R) is defined as work undertaken to extend the service life of an existing bridge and to enhance highway safety. The intent of this work is to return a bridge to a condition of structural or functional adequacy. This work may include upgrading geometric features such as roadway (bridge) widening (no increase in number of through lanes), flattening curves, or improving sight distance. Examples of this work are shallow and deep concrete overlays, superstructure repairs, railing replacements, extensive substructure repair, and substructure replacement. (8-20-2009)

Reconstruction (4R) involves substantial changes to the existing structure such as bridge deck replacement or greater. See Chapter 7 for reconstruction (including deck replacements) projects requirements.
(3-26-2012)

12.00 (continued)

Bridges to remain in place criteria occurs when a bridge falls within a road project and no work is planned for the bridge (see AASHTO publication, ***A Policy on Design Standards - Interstate System*** or ***A Policy on Geometric Design of Highways and Streets***). If the bridge does not meet the criteria to "remain in place" the Road Designer shall submit any necessary design exceptions for the bridge. (3-26-2012)

With structure resurfacing, railing upgrading and joint replacement projects the structural adequacy of the superstructure shall be evaluated.

12.01.01

Structures Carrying Pedestrian Traffic

Where pedestrian traffic exists across a structure having sidewalks less than 4'-0" wide, an evaluation must be made to determine the hazard involved and to consider practical improvements.

All structures carrying pedestrians need to be evaluated for conformance with the Americans with Disabilities Act (ADA) requirements.

Regardless of project work type, expansion joints located on sidewalks shall be fitted with cover plates to eliminate vertical depressions caused by the joint. Cover plates may be galvanized steel (AASHTO M270, Grade 36) or steel encapsulated in EPDM rubber or neoprene (polychloroprene). Cover plates shall meet all the requirements set forth by ADA. See Section 7.02.27 & 12.06.01 and EJ3 & EJ4 Sheets. (8-20-2009) (3-26-2012)

Where recommended by the Region Project Development or Bridge Engineer, rehabilitation projects should include pedestrian fencing. In Metro Detroit, all rehabilitation projects, including painting projects, over freeways should include pedestrian fencing.

For limits of the metropolitan area see Appendix 12.01.01. (8-6-92)

For information regarding MDOT fencing policy and design criteria see Section 7.02.29 and Section 7.05.

12.01.02

Historic Bridges

Consideration must be given to preserving structures designated as “historic bridges.” The project engineer can find a bridge’s historical significance from the Structural Inventory and Appraisal form (SI&A), item 37. The Transportation Management System (SMS) has the SI&A data for all the state bridges. Alternatively, PE’s can find data for all historical bridges through the MDOT Web site:http://www.michigan.gov/documents/mdot_SIA_Manual-2_79072_7.pdf

Designers rehabilitating historically designated bridges shall contact the Cultural Resource Coordinator in the Environmental Section of the Transportation Planning Services Bureau to determine what measures are practical and justified to preserve the historical value. Where projects are insufficiently scoped for the proposed work, adding significantly to the cost of the project, the designer shall request the Region Project Development Engineer to appropriate the additional funds from their bridge budget.

12.04

STRUCTURE RESURFACING(9-2-2003)

Where the scope of work indicates an overlay, it will be for one of the following types:

Shallow concrete overlay
Deep concrete overlay
Hot mix asphalt (HMA) wearing course

Shallow concrete overlays are either latex or silica fume. Use this option when additional deck work is anticipated in 10 to 15 years.

Deep overlays are silica fume modified mixes. Use this option where the underside of the deck is sound and additional deck work is not anticipated for 25 to 30 years.

Use an HMA wearing course on a waterproofing barrier - where additional deck work is anticipated within 5 to 10 years. (12-5-2005)

With all types of overlays, an existing thrie beam retrofit height of 34" to top of rail shall be maintained. (12-5-2005)

See the Bridge Deck Preservation Matrix (Section 12.09.02) for further clarification.

See section 7.02.19 G when superelevations and parabolic crowns are encountered on an overlay project. (12-5-2005) (3-26-2012)

If feasible overlays should be done to a 2 % cross slope, otherwise a 1.5 % slope is acceptable. A check of the structural adequacy of the superstructure shall be done and composite action of shallow and deep concrete overlays according to AASHTO Bridge Specifications shall also be considered. (8-20-2009)

12.04.01

Origin of Projects

Resurfacing projects usually originate from the bridge maintenance programs of the Region/TSC. They may also originate from a road resurfacing project, since the FHWA requires all structures within the limits of such projects be considered for upgrading if there is a need.

12.04.02

Bridges Within Road Project Limits

(9-2-2003)Concrete decks that are in good condition and that have no existing hot mix asphalt(HMA) overlay will be gapped out of road resurfacing projects. If the deck condition is poor or there is an HMA overlay, they shall be treated as follows:

A. If the deck is scheduled for a concrete overlay, it shall be included in the project as a concrete overlay.
B. If the deck is scheduled for replacement within two years, the deck may be overlaid with HMA. Any existing HMA shall be removed.
C. Gapping out the HMA overlay is not cost effective for very short structures. For these structures, the HMA overlay will be continued across the structure after placing a waterproofing barrier.

12.04.03

Concrete Removal

(5-1-2000) Decks which are to be overlaid with a concrete surfacing mixture will be prepared by scarification followed by two passes of hydrodemolition.

12.08.08

Roadway Widening With Filler Walls

For rehabilitation projects with piers in the clear zone due to roadway widening; filler walls shall be used between columns and guardrail attached as detailed on Standard Plans R-55 & 67-Series. (3-26-2012)

CLEAR ROADWAY WIDTHS AND DESIGN LOADING FOR BRIDGES BEING REHABILITATED (3-26-2012)			
Type of Roadway		**Minimum Clear Roadway Width**	**Minimum Design Loading**
Non-Interstate Freeway		A, B	HS-20
Interstate Freeway		A, B	HS-20
Arterial (Non-Freeway Trunkline)	Rural	C	HS-20
	Urban	D	HS-20
Collector (Non-Trunkline)	Rural	Exhibit 6-7.	H 15
	Urban	Exhibit 6-5., E	H 15
Local (Non-Trunkline)	Rural	Exhibit 5-7.	ADT≤50:H 10 ADT>50:H 15
	Urban	Exhibit 5-5., E	

(A) As constructed.

(B) Consideration should be given to carrying the full shoulders of the approach roadway across the structure if it is cost effective to do so.

(C) The minimum clear roadway should accommodate the traveled way plus 2'-0" on each side. (12-5-2005)

(D) The minimum clear width on the bridge shall be the same as the curb-to-curb width of the street.

(E) The minimum clear roadway shall be the traveled way plus 1'-0" to each curb face. However, consideration should be given to providing the same width as the curb-to-curb approach width if it is cost effective to do so.

The tables shown in this appendix are derived from A Policy on Geometric Design of Highways and Streets, 2004, published by AASHTO.
(3-26-2012)

Exhibit 6-7. **STRUCTURAL CAPACITIES AND MINIMUM ROADWAY WIDTHS FOR BRIDGES BEING REHABILITATED CARRYING RURAL COLLECTOR ROADS**

Design Traffic Volume(veh/day)	Design Loading Structural Capacity	Minimum Clear Roadway Width (ft)[a]
Under 400	H 15	22
400 to 1500	H 15	22
1500 to 2000	H 15	24
over 2000	H 15	28

[a] Clear width between curbs or railings, whichever is the lesser, shall be equal to or greater than the approach traveled way width, wherever practical.

The values in Exhibit 6-7. do not apply to structures with a total length greater than 100 ft. These structures should be analyzed individually by taking into consideration the clear width provided, safety, traffic volumes, remaining life of the structure, design speed, and other pertinent factors.

Exhibit 6-5. **MINIMUM WIDTH OF TRAVELED WAY FOR COLLECTOR ROADS**

Design Speed(mph)	Design Traffic Volumes (veh/day)			
	Under 400	400-1500	1500 -2000	over 2000
	Width of Traveled Way (ft)			
20-30	20[a]	20	22	24
35-40	20[a]	22	22	24
45-50	20	22	22	24
55-60	22	22	24	24

[a] A 18 ft minimum width may be used for roadways with design volumes under 250 veh/day.

On roadways to be reconstructed, a 22 ft traveled way may be retained where the alignment and safety records are satisfactory.

Exhibit 5-7. **MINIMUM STRUCTURAL CAPACITIES AND MINIMUM CLEAR ROADWAY WIDTHS FOR BRIDGES BEING REHABILITATED CARRYING RURAL LOCAL ROADS**

Design Traffic Volume(veh/day)	Design Loading Structural Capacity	Minimum Clear Roadway Width (ft)[(a) (b)]
0-50	H 10	20[(c)]
51-250	H 15	20
250-1500	H 15	22
1500-2000	H 15	24
over 2000	H 15	28

(a) Clear width between curbs or railings, whichever is the lesser.
(b) Minimum clear widths that are 2 ft narrower may be less than the approach traveled way width.
(c) For one-lane bridges use 18 ft.

The values in Exhibit 5-7. do not apply to structures with total length greater than 100 ft. These structures should be analyzed individually, taking into consideration the clear width provided, traffic volumes, remaining life of the structure, pedestrian volumes, snow storage, design speed, crash record, and other pertinent factors.

Exhibit 5-5. **MINIMUM WIDTH OF TRAVELED WAY FOR LOCAL ROADS**

	Design Traffic Volumes (veh/day)			
Design Speed(mph)	Under 400	400-1500	1500 -2000	over 2000
	Width of Traveled Way (ft)			
15	18	20	20	22
20-40	18	20	22	24
45-50	20	22	22	24
55-60	22	22	24	24

Where the width of traveled way is shown as 24 ft, the width may remain 22 ft m on reconstructed bridges where alignment and safety records are satisfactory.

DRAWN BY: BLT CHECKED BY: VZ APPROVED BY: DAJ	MICHIGAN DEPARTMENT OF TRANSPORTATION BUREAU OF HIGHWAY DEVELOPMENT FIXED SHOE	ISSUED: 03/26/12 SUPERSEDES: 02/14/11

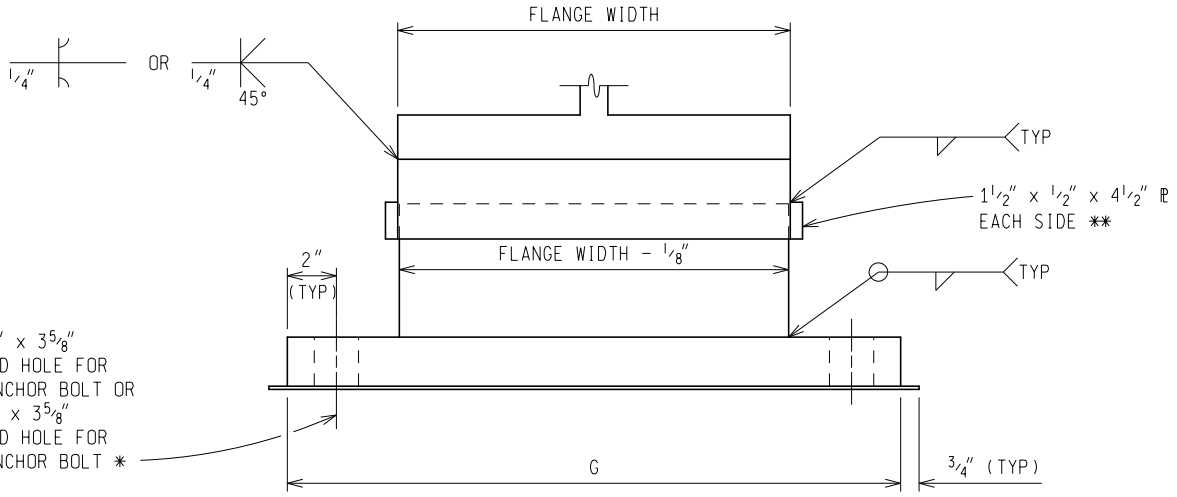

NOTE: ANCHOR BOLTS SHALL BE FURNISHED WITH 1/4" x 3" x 6 1/2" ℙ WASHERS.

END VIEW

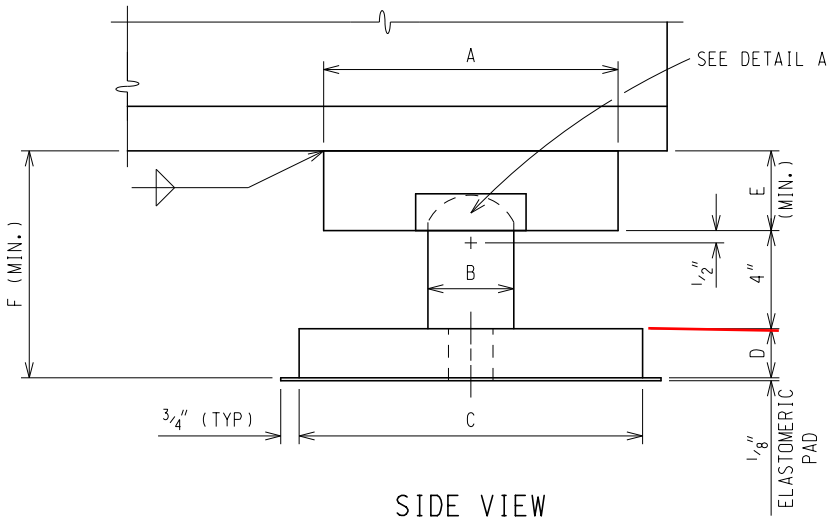

SIDE VIEW

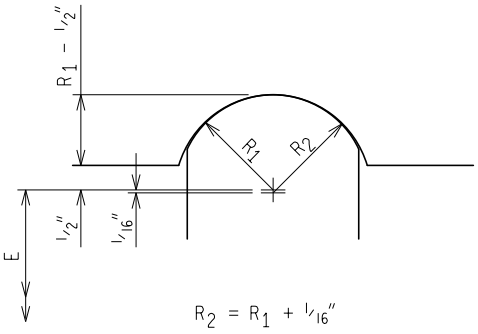

$R_2 = R_1 + 1/16''$

DETAIL A

NOTES:

SEE GUIDE 8.32.06 FOR TABULATION OF BEARING DIMENSIONS

USE FIXED SHOE WHEN A BUILT UP PEDESTAL IS REQUIRED. AN EXCEPTION IS WHEN A PEDESTAL IS USED ON THE SAME PIER AS A ROCKER, THEN USE GUIDE 8.32.03.

* USE 1 1/2" ANCHOR BOLT FOR SPANS OVER 100'

** USE 2" x 1/2" x 5 1/2" ℙ WHEN $R_1 = 1\,15/16''$

EQUIV. d FOR BEARING CHECK:

$$d = \frac{2R_1 R_2}{R_2 - R_1}$$

PREPARED BY DESIGN DIVISION	8.32.05