Road & Bridge Design Publications

Monthly Update – September 2013

Revisions for the month of **September** are listed and displayed below. The special detail index from the "July Special Update" will remain in effect. Contact Wayne Pikka (pikkaw@michigan.gov) for questions related to the road changes. Contact Vladimir Zokvic (zokvicv@michigan.gov) for questions related to the bridge changes.

Road Design Manual

Index to Chapter 6: In the index for section 6.04.12E, the former pay items "Pavt Repr, Conc Moving from Repr to Repr" and "Calcium Chloride" were removed (since they are no longer in the current spec book) and the remaining pay items were renumbered.

6.04.12C: Distances Between Concrete Patches: The minimum distance between patches was revised from 15' to 8' to match the spec book. (Page 330)

6.04.12E: Patching Pay Items: Revisions are as listed in the Index to Chapter 6 above. In addition, the outdated pay items were removed from the list of Patching Pay Items and the chart on "requirements for additional cement for the various open to traffic periods" was also revised to match the spec book. (Page 327)

6.05.13: Safety Edge: Revisions were made to this section to clarify that:

- The safety edge is constructed at the time of new shoulder construction, resurfacing or widening. They are not retrofitted against existing shoulders or added subsequent to shoulder paving, resurfacing or widening.
- Use of the safety edge requires a minimum resurfacing depth of 1 ½".
- The criterion that the shoulder is used to maintain traffic applies to use of the full shoulder or any portion of the shoulder.

14.60.03: Exceptions (Submitting packages to S&E): The Exception Risk Analysis paragraph was rewritten to current practice.

Bridge Design Guides

6.65.13 – Added dimensions for 4' box beams in Plan view. Deleted K04 bars in Post – Tensioning Detail view which implied all beams needing K04 bars encompassing post tensioning conduit. Only fascia beams need K04 bars to encompass conduit and stress pocket. Current plans already detailing K04 bars in all beams do not require revision.

Road & Bridge Design Publications

Monthly Update – September 2013

6.65.14 A – Added note allowing variations in locations of lifting devices due to beam lateral stability. Locations of lifting devices shall be designed according to AASHTO, PCI and all other appropriate specifications.

Updates to MDOT Cell Library, Bridge Auto Draw Program, etc., may be required in tandem with some of this month's updates. Until such updates to automated tools can be made, it is the designer's/detailer's responsibility to manually incorporate any necessary revisions to notes and plan details to reflect these revisions.

MICHIGAN DESIGN MANUAL
ROAD DESIGN

CHAPTER 6 SURFACING AND SHOULDERS INDEX (continued)

6.04.08 Concrete Base Course
- A. Criteria for Use
- B. Reinforcement
- C. Texture and Joints

6.04.09 Concrete Widening
- A. Criteria for Use of Lane Ties in Longitudinal Bulkhead Joints
- B. Deleted
- C. Flush Surfaces
- D. Standard Plans

6.04.10 Concrete Tapers

6.04.11 Concrete Pavement Overlays
- A. Bonded Overlay
- B. Concrete Cap
- C. Unbonded Overlay
- D. Whitetopping

6.04.12 Concrete Pavement Patching
- A. References
- B. General
- C. Distances Between Concrete Patches
- D. Expansion Space to be Provided
- E. Patching Pay Items
  1. Pavt Repr, Rem
  2. Saw Cut, Intermediate
  3. Pavt Repr, Reinf Conc and Pavt Repr, Nonreinf Conc
  4. Lane Tie, Epoxy Anchored
  5. Joint Types
  6. Cement
  7. Non-Chloride Accelerator
- F. Typical Joint Layouts for Concrete Repairs
- G. Reinforcement
- H. Doweled Repairs
- I. Replacing Previously Undoweled Patches
- J. Adjusting Drainage Structure Covers in Patches
- K. Longitudinal Joints
- L. Patching Utility Trenches
- M. Patching Pavements Having a Concrete Cap
- N. Other Pavement Repairs
- O. Causes of Joint Deterioration
- P. Provision for Pressure Relief Joints

6.04.11 (continued)

Concrete Pavement Overlays

C. Unbonded Overlay

This method of pavement rehabilitation provides a new pavement while making use of the old as base and basically involves constructing a new pavement atop the old. The Department completed many such projects since 1984.

While the designer can expect to be furnished details of such construction if a project is ever assigned, it should be noted that, on an I-96 project, from M-66 easterly to the Grand River at Portland, the underlying CRC pavement was sawed into 100' long slabs, 7" deep sawcut to cut the lowest steel. An 80 lbs/syd (minimum) HMA separation course was used between existing pavement and the overlay. The overlay pavement was 7" thick, which necessitated a modified transverse joint design and modified load transfer assemblies. The transverse joints were staggered to keep them at least 3' away from joints or open cracks in the underlying pavement.

Some of the obvious disadvantages of a thick concrete pavement overlay are that it raises the level of the pavement sufficiently to render existing guardrail too low, it steepens the foreslope for a few feet beyond the shoulder hinge point, and it usually cannot be used under bridges because of underclearance requirements.

6.04.11 (continued)

D. Whitetopping

In 1999, the Department constructed it's first whitetopping project on M-46 from just east of Carsonville to M-25 in Port Sanilac. It contained two 6" sections, one with fiber reinforcement and one without, a small 5" transition section, and a 3" ultra-thin section in Port Sanilac. The intersection of M-54 and M-83 near Birch Run was also whitetopped in 2000. Because these projects are relatively young, the performance of whitetopping is still being evaluated.

6.04.12 (revised 9-16-2013)

Concrete Pavement Patching

A. References

See Standard Plan R-44-Series, "Concrete Pavement Repair". Also see Section 6.03.04B, Concrete or Composite (HMA on Concrete) Pavement.

B. General

It is preferable to delay a first-time resurfacing of a concrete pavement as long as possible by patching and joint repair. As the emphasis has shifted from large scale new construction or relocation to improving and expanding the existing trunkline system, and maintaining it, patching and joint repair projects have taken an increasingly larger share of construction dollars.

It is difficult to separate patching from joint repair. Except for construction-induced pavement and base deficiencies, most deterioration of a pavement occurs at the joints, primarily in the transverse joints and, to a lesser extent, in the longitudinal joints and deteriorated transverse cracks.

6.04.12 (continued)

Concrete Pavement Patching

C. Distances Between Concrete Patches

The minimum distance between patches should be 8', according to the ***Standard Specifications for Construction***. If less than 8' between repairs, the entire section of old pavement should be removed and a longer repair constructed. A note should be included in the plans to this effect. Some judgement should be used, however; if the designer frequently finds that the minimum distance between patches criteria is being encountered, it may indicate that the wrong "fix" has been chosen for the project.

Too many patches per mile is objectionable for two reasons:

1. The motorist visually perceives the pavement to be in bad condition and thus may expect a poor ride even though the patches may actually be quite smooth riding.

2. Excessive patching may indicate that the wrong treatment has been selected and that the money spent on patching could have been better utilized if contributed toward a different type of rehabilitation. A study prepared by Gerald T. Luther in February 1989 concluded that, using a life cycle analysis, about 75 patches per lane mile equates in cost to about 4" of HMA resurfacing over a 20-year life span. The HMA project, however, would be ready for total rehabilitation at the end of the 20 years whereas the patched project would still have about seven years of useful life remaining. The Engineering Operations Committee, on March 21, 1989, decided that for design purposes, patches should be limited to a maximum of 60 repairs per lane mile.

6.04.12 (continued)

D. Expansion Space to be Provided

Unless the pavement being repaired is to be HMA overlaid, patches and joint repairs should provide 1" of expansion space in 1000' of pavement. Expansion space is provided by use of Expansion Joint, Erg.

In general, it is preferable to disperse expansion space throughout a project than to concentrate joints at one location. Since most old expansion joints are bound up, providing less than full width relief will only compound the problem. Where the existing joint is an expansion joint, provide a new Erg across all lanes to provide uniform relief. (Do not use an E2 and match the existing joint.) Care must be taken to choose locations where the Expansion Joint, Erg can be placed across all lanes.

E. Patching Pay Items

The more common pay items applicable to a patching project are:

Pavt Repr, Rem	Square Yard
Saw Cut, Intermediate	Foot
Pavt Repr, Reinf Conc, __ inch	Square Yard
Pavt Repr, Noneinf Conc, __ inch	Square Yard
Lane Tie, Epoxy Anchored	Each
Joint, Contraction, Crg	Foot
Joint, Expansion, Erg	Foot
Joint, Expansion, Esc	Foot
Joint, Tied, Trg	Foot
Cement	Ton
Non-Chloride Accelerator	Gallon

6.04.12E (continued)

Concrete Pavement Patching

The following notes clarify the use of these items:

1. Pavt Repr, Rem

The pay item of Pavt Repr, Rem applies to pavement removals from 4' (the minimum length of a patch) to 50' long. Removals more than 50' long are paid for as Pavt, Rem. Removal of concrete shoulders, curb, curb and gutter, and valley gutter are paid for using the same pay item as used for the adjacent pavement.

It should be noted that Pavt, Rem carries no restriction regarding disturbance of the underlying base, whereas Pavt Repr, Rem does carry a prohibition against disturbing the base, so as to require sawing and lifting methods. Pavement removal for utility cuts, even though unavoidably disturbing the base, should be paid for as "Pavt Repr, Rem.

If the thickness of the old pavement being removed results in the base being more than 2" low, the contractor will be required to bring it up to proper elevation with aggregate. (Concrete would be permitted but payment will be limited to that for aggregate) If the base is 2" low or less, or is low as a result of the contractor's removal operation, the contractor must fill the deficiency with concrete at his/her expense. Any disturbed base must be recompacted before casting the patch, otherwise settlement will occur.

6.04.12E (continued)

2. Saw Cut, Intermediate

Because the pay item Pavt Repr, Rem prohibits disturbing the base, the contractor must lift out the old pavement that is to be replaced. This in turn requires that it be cut up into 6' long slabs of a lane width, (a convenient size that will fit a dump truck.) Most repairs occur at a joint or crack where the pavement segment will break into two pieces anyway, but for longer repairs we compensate the contractor for the cost of sawing the old pavement up into 6' lengths. For estimating purposes, designers should assume that approximately 75% of the repairs in the over 6' to 12' range will require one intermediate saw cut. Ten percent of the 6' patches should also be set up for an intermediate saw cut. Patches longer than 12' (but not exceeding 50') should be set up for one saw cut every 6'.

6.04.12E (continued)

Concrete Pavement Patching

3. Pavt Repr, Reinf Conc and Pavt Repr, Nonreinf Conc

The pay item depth for repairs is based on the plan thickness originally specified for the existing concrete pavement plus 1".

Regardless of whether or not the repair is less than 50' long or more than 50' long, the pavement that goes back into the repair is paid for as Pavt Repr, Reinf Conc not as Conc Pavt, Misc, Reinf __ inch. However, if a number of longer patches are encountered, perhaps on the order of 100' long (which would be unusual), then the item of Conc Pavt, Misc, Reinf __ inch might be considered, in consultation with Construction Field Services Division. The same holds true for nonreinforced repairs.

The texture of the repair should approximate that of the adjacent pavement, e.g., a heavily tined patch in a comparatively smooth textured pavement would not only accentuate the perception of a patched pavement but would provide an audible and tactile discontinuity as well.

6.04.12E (continued)

4. Lane Tie, Epoxy Anchored

Epoxy anchored lane ties shall be used between the adjoining lanes of full width pavement repairs where the distance between joints exceeds 15' and shall be spaced according to Standard Plan R-41-Series. Single-lane pavement repairs, one slab length or longer shall use "Lane Tie, Epoxy Anchored" for that portion of the repair between the joints of the existing pavement. Single-lane repairs greater than 15' that are located on curves with radii 3800' or less shall also be tied to the adjacent slab. Do not install epoxy anchored lane ties in the offset portion of a tangent repair unless the end aligns with an existing joint or working crack. See Standard plan R-44-Series and Section 6.04.12F for more detailed information.

5. Joint Types

Repairs made in jointed concrete pavements shall be doweled and grouted unless otherwise directed by the Engineer. The transverse joint types used (Tied Joint, Trg, Contraction Joint, Crg, and Expansion Joint, Erg) are specified on Standard Plan R-44-Series. When the repair includes a curb and gutter and an Expansion Joint, Erg, an undoweled Expansion Joint, Esc shall be placed in the curb and gutter portion of the repair.

6.04.12E (continued)

Concrete Pavement Patching

6. Cement

The Concrete Pavement Repair pay items basically compensate the contractor only for using ordinary Grade P1 concrete. Faster set concrete, when required, is obtained by adding more cement, which is a pay item measured in tons. The amount of additional cement that will be needed is dependent on the maintaining traffic requirements in the plans or proposal, which should specify how long a repair may be closed to traffic. Section 603 of the ***Standard Specifications for Construction*** specifies the grade or type of concrete that must be used in order to meet the open to traffic requirement. The designer can calculate the amount of additional cement required by referring to Sections 601 and 603 of the ***Standard Specifications for Construction***, based on the anticipated temperature at the time of construction. The requirements for additional cement for the various open-to-traffic periods are summarized in the table below:

From Casting to Intended Opening	Grade or Type of Concrete	Additional Cement Required lbs/cyd
< 72 hours	Grade P-NC	94 (above 59° F) 188 (59° F or less)
≥ 3 days	Grade P1, P1M	

6.04.12E (continued)

7. Non-Chloride Accelerator

Non-chloride accelerators typically come in liquid form as opposed to calcium chloride which comes as solid flakes. Like calcium chloride, non-chloride accelerators speed up the setting of concrete for situations where an earlier open to traffic is desired. However, early-age strength gain is not as rapid, and therefore open to traffic times will be longer, as compared to calcium chloride. Because of long-term durability concerns of repairs utilizing concrete with calcium chloride, the use of a non-chloride accelerator to speed up setting time is preferable. They are used to achieve the shorter end of the intended opening to traffic times for Type P-NC concrete. For quantities, the designer should estimate two gallons per cubic yard of concrete for the repairs that will require earlier open times.

6.05.13 (revised 9-16-2013)

Safety Edge

The safety edge is a beveled pavement edge designed to reduce the severity of vehicle roadway departures and provides increased driver control on re-entry.

On February 6, 2013 the Engineering Operations Committee adopted a policy to incorporate the safety edge.

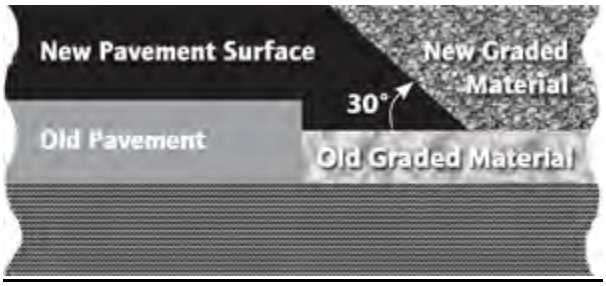

The safety edge will be applied as follows for all pavement types:

Temporary Pavements - All newly constructed temporary pavements will be constructed with a safety edge. This includes permanent shoulders that are newly constructed, resurfaced (1½" minimum) or widened, and fully or partially used in the course of the same project as temporary lanes with construction speeds of 45 mph or greater.

Confined Edges - The safety edge should be omitted in those locations where the shoulder is terminated or separated by curb and gutter or valley gutter.

Freeway Ramps - Freeway to freeway ramp shoulders constructed, resurfaced (1½" minimum), or widened without shoulder corrugations will be constructed, resurfaced or widened with a safety edge. Regular freeway off and on ramps should not incorporate the safety edge.

6.05.13 (continued)

Narrow Freeway Shoulders (4' paved or less) that are constructed, resurfaced (1½" minimum), or widened will be constructed, resurfaced or widened with a safety edge.

Rural Trunkline - Trunkline shoulders that are newly constructed, resurfaced (1½" minimum) or widened without shoulder corrugations will be constructed, resurfaced or widened with a safety edge where the posted speed is 45 mph or greater .

The safety edge may be omitted in developed rural areas where driveway density exceeds 30 access points within ½ mile.

Safety Application - If safety concerns are known, the safety edge can be considered for use on any roadway or ramp.

Details of the safety edge are shown on Standard Plan R-110-Series. Specifications require that the safety edge be constructed monolithically with the shoulder pavement and that there will be no separate payment for constructing it. Designers should provide additional concrete pay item quantities used for concrete shoulder to construct the safety edge adjacent to concrete shoulder. The locations where the safety edge applies should be identified where appropriate on the typical cross sections or maintaining traffic details.

The designer should review existing field conditions to identify areas where berms may have developed that would impede postive drainage. Additional details and sperate payment such as station grading modified may be needed to remove the berm.

14.60.03 (revised 9-16-2013)

Exceptions

There are some exceptions to the above minimum requirements for submittal of plan/proposal packages to the Specifications and Estimates Section. Exceptions are permitted in the following areas:

- Permits
- ROW Certification on non-federally funded projects
- Local Agency agreements
- Unique Special Provisions

In order to submit a package to the Specifications and Estimates unit with an allowable exception, the following steps must be followed:

- Perform a risk analysis for each appropriate exception.
- Invite appropriate experts for each exception to the OEC Meeting.
- Send the Exception Risk Analysis (Form 2912) along with the other required documents to the OEC participants (two weeks prior to the meeting).
- If the participants at the OEC meeting agree with your request for an exception, have them initial the Exception Risk Analysis (Form 2912).
- If the participants disagree with the need for an exception, they must attach written comments to the Exception Risk Analysis (Form 2912).
- The Exception Risk Analysis (Form 2912) along with any comments should be forwarded to the Region Engineer for their signature. The form is placed in the Supporting Documents folder in ProjectWise when the plan/proposal package is submitted to the Specifications and Estimates unit.

- **14.60.03 (continued)**

Exceptions

- If the exception is a permit, include a Notice to Bidders that a permit is required, the projected date of permit approval and identify any restrictive conditions.

Specifications and Estimates will not process the package without an approved exception.

Once a project is submitted to the Specifications and Estimates Unit the Project Manager can check ProjectWise for the status of a project.

Upon receipt of the plan/proposal package for processing, the Specifications and Estimates Unit may ask to review the project with the Design Unit in order to gain an insight into the type of work involved to determine if any additional special provisions and/or supplemental specifications are required.

The Specifications and Estimates Unit processes projects in the same sequence as they are submitted. Expedited or other projects requiring special attention should be brought to the attention of the Supervisor of the Unit prior to submittal. This includes projects without all the material described above.

DRAWN BY: BLT CHECKED BY: VZ APPROVED BY: DAJ	MICHIGAN DEPARTMENT OF TRANSPORTATION BUREAU OF HIGHWAY DEVELOPMENT PRESTRESSED CONCRETE BOX BEAM AND POST-TENSIONING DETAILS	ISSUED: 09/16/13 SUPERSEDES: 02/14/11

WHEN REQUIRED TO PREVENT GROUT FROM ENTERING POST TENSIONING HOLE AROUND SEAL WASHERS:

1. FILL KEYWAY, WITH TYPE H-1 MORTAR, FLUSH WITH SIDE OF BEAM FOR 6" MIN. BOTH SIDES OF HOLE.
2. ELIMINATE KEYWAY

OR

3. USE ENGINEER APPROVED METHOD

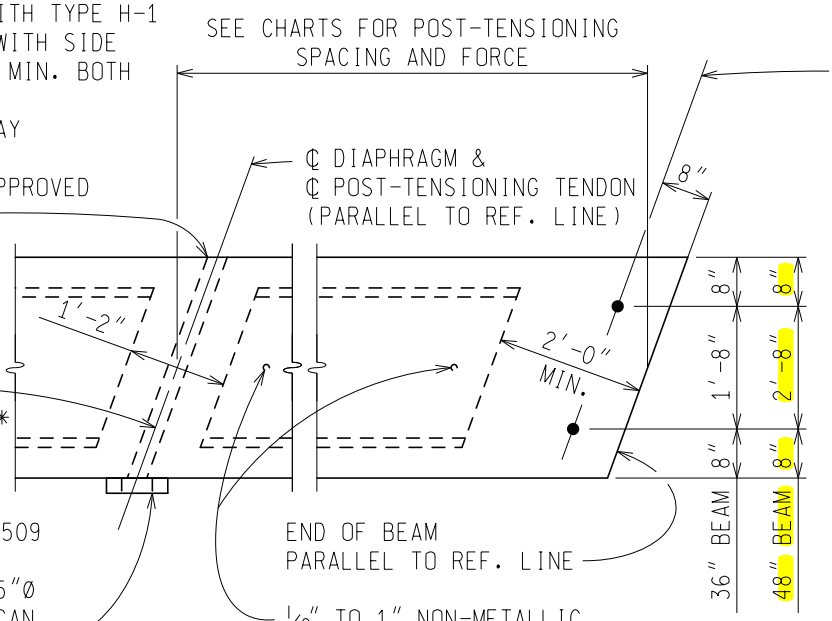

*** USE 3"Ø, 4"Ø, 5"Ø AS REQUIRED FOR BEAM SIZE AND POST TENSIONING FORCE.

PLAN

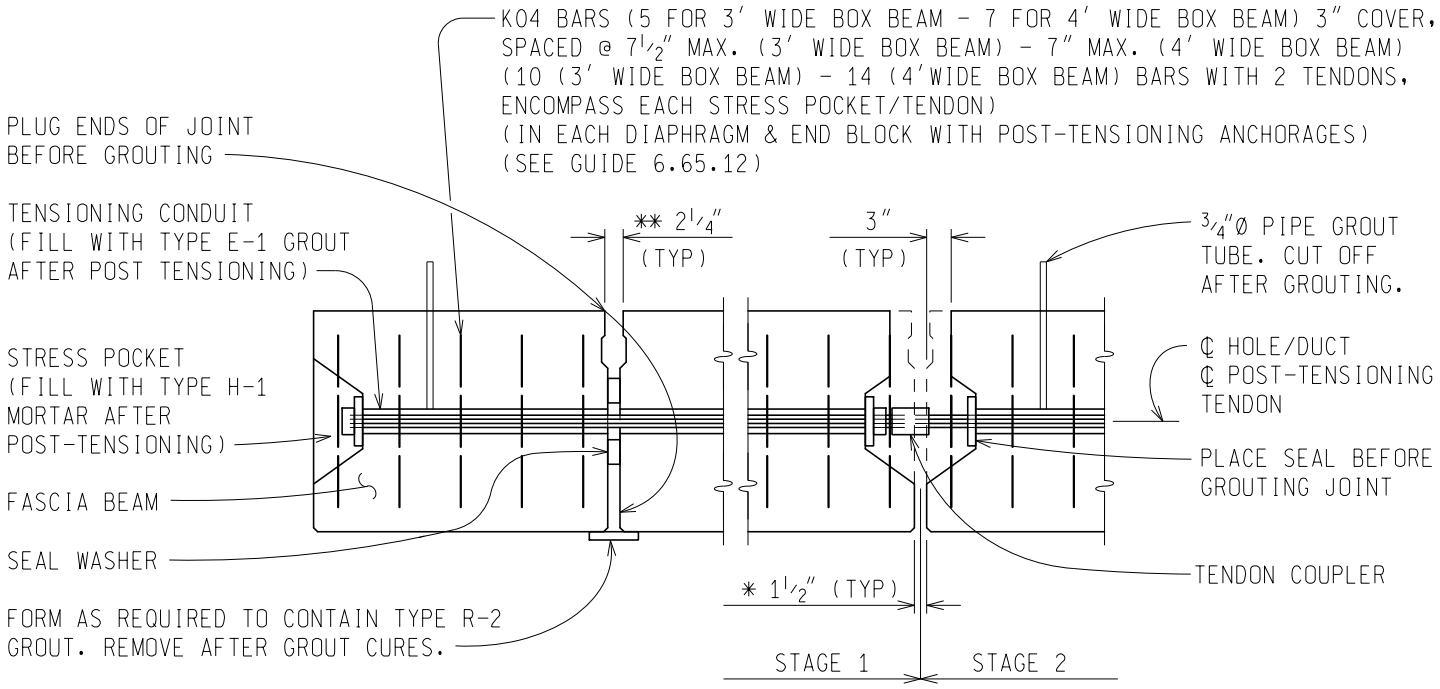

* 3" MAX.
** 3¾" MAX., 1½" MIN.

POST-TENSIONING DETAIL

PLAN NOTE:
STRESS POCKETS, ANCHOR PLATES AND TENDON COUPLERS SHALL BE AS REQUIRED FOR THE POST-TENSIONING SYSTEM PROVIDED.

PREPARED BY DESIGN DIVISION	6.65.13

DRAWN BY: BLT CHECKED BY: VZ APPROVED BY: DAJ	MICHIGAN DEPARTMENT OF TRANSPORTATION BUREAU OF HIGHWAY DEVELOPMENT PRESTRESSED CONCRETE BEAM LIFTING DEVICE DETAILS	ISSUED: 09/16/13 SUPERSEDES: 02/14/11

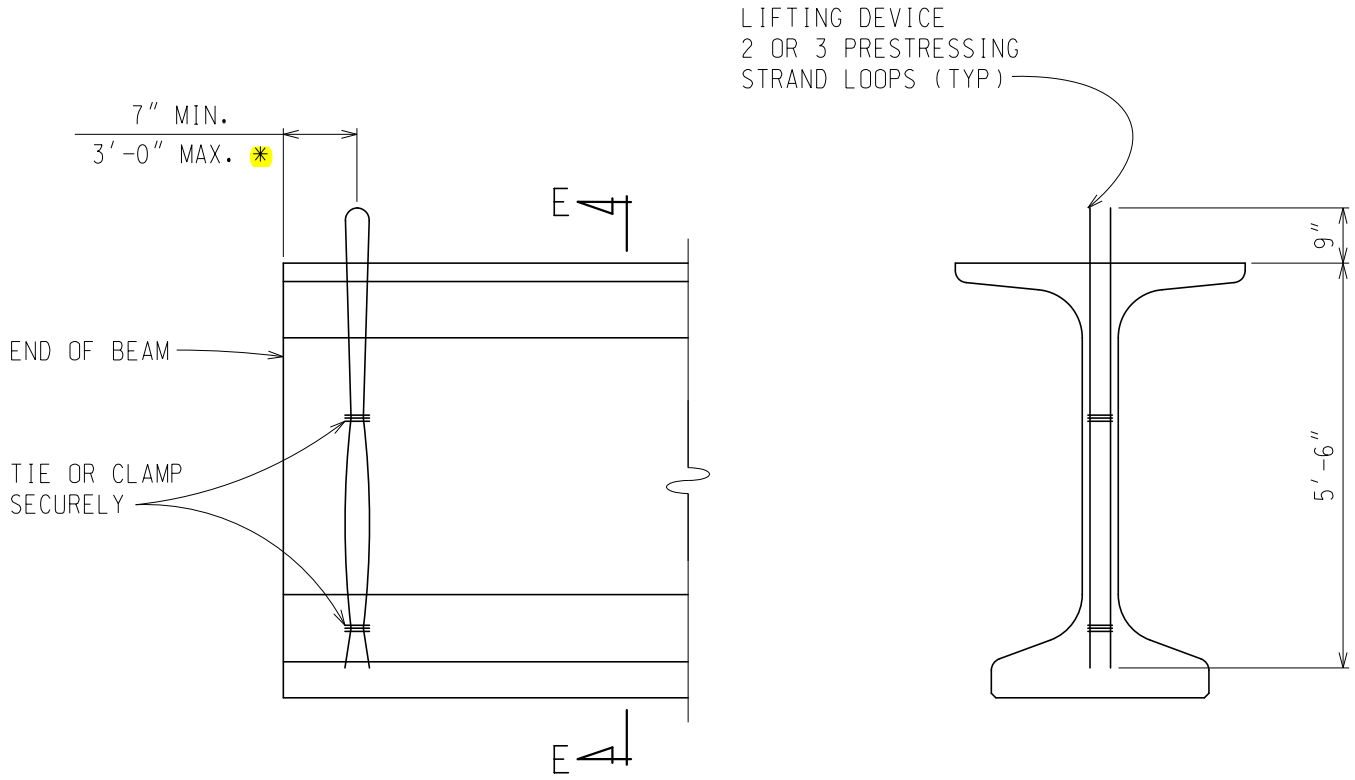

ELEVATION

SECTION E-E

DETAILS FOR MICHIGAN 1800 CONCRETE BEAMS

PRESTRESSING STRAND LIFTING DEVICES		
BEAM WEIGHT (TONS)	STRAND SIZE	NUMBER OF STRANDS
34	3/8"	2
43	7/16"	2
53	1/2"	2
53	3/8"	3
62	7/16"	3
70	1/2"	3

* INCREASE IF REQUIRED TO MAKE BEAM LATERALLY STABLE DURING HANDLING.

PLAN NOTE:

LIFTING DEVICES SHALL BE REMOVED. REMOVAL IS INCLUDED IN THE BID ITEM "PREST CONC 1800 BEAM, ERECT."

PREPARED BY DESIGN DIVISION	6.65.14A