Road & Bridge Design Publications

Monthly Update – April 2015

Revisions for the month of **April** are listed and displayed below. New special details will be included in projects submitted for the **July** letting as is stated on the special detail index sheets. E-mail any questions related to these changes to MDOT-Road-Design-Standards@michigan.gov.

Special Details

R-1-G: Drainage Structures: On sheet one, added the term "minimum" to the wall thicknesses in the typical manhole detail. On sheet two, eliminated the structure sizes on the details for the catch basin, inlet, and the two larger precast sumps. Notes were revised so these sizes are obtained from other details. The effect of which allows 4', 5', or 6' diameter structures instead of just 4'. On sheet four, expanded the table of dimensions and revised the notes related to the details to cover the larger structure sizes which were recently added. On sheet five, in the "Wall Thickness" column of the "Base and Riser Dimension Table", changed the heading of the column to "Min Wall Thickness" and revised the values in the column slightly lower to conform to ASTM standards. Also, revised the details on sheets six, seven, and eight such that the lines defining the riser portion of the structures (top) are solid instead of dashed.

Road Design Manual

3.04.02: Superelevation Transitions: Minor editorial changes were made. The variable for the width of pavement was revised from lower case to upper case to match the standard plan. A typo was also corrected.

4.02.20: Jacked in Place Sewers: Added language concerning the need for soil borings prior to tunneling or jacked-in-place pipe installations.

6.08.06B: Historic Buildings and Districts: Renamed "Bureau of Transportation Planning" as "Bureau of Development".

14.25: Request for Special Soils Investigations or Designs: Added "trenchless installations" to the list of items requiring geotechnical assistance from CFS when soil information, analysis, or design is necessary.

4.02.20, 6.03.04B10, 13.02.06, 13.04.03E, 13.05, & 13.05.03: The term "THE Plan Review" was revised to "The Plan Review".

Road & Bridge Design Publications

Monthly Update – April 2015

Updates to MDOT Cell Library, Bridge Auto Draw Program, etc., may be required in tandem with some of this month's updates. Until such updates to automated tools can be made, it is the designer's/detailer's responsibility to manually incorporate any necessary revisions to notes and plan details to reflect these revisions.

Index to Special Details

4-20-2015

⑥

SPECIAL DETAIL NUMBER	NUMBER OF SHEETS	TITLE	CURRENT DATE
21	2	GUARDRAIL AT INTERSECTIONS	5-24-01
24	5	GUARDRAIL ANCHORED IN BACK SLOPE TYPES 4B & 4T	7-22-02
99	2	CHAIN LINK FENCE WITH WIRE ROPE	9-22-14
*R-1-G	9	DRAINAGE STRUCTURES	4-2-15
R-62-H	5	GUARDRAIL APPROACH TERMINAL TYPES 2B & 2T (SKT)	10-28-14
R-126-I	5	PLACEMENT OF TEMPORARY BARRIER	3-26-12

*** Denotes New or Revised Special Detail to be included in projects for (beginning with) the July letting.**

Note: Former Standard Plans IV-87, IV-89, IV-90, and IV-91 Series, used for building cast-in-place concrete head walls for elliptical and circular pipe culverts, are now being replaced with plans that detail each specific size. The Municipal Utilities Unit will provide these full sized special details for inclusion in construction plans for MDOT jobs. To assure prompt delivery, requests ***must*** be made in advance.

Former Standard Plans IV-93 and IV-94 series have been replaced with precast concrete box & three-sided culverts as per the 2012 Standard Specifications for Construction.

Index to Bridge Detail Sheets

4-20-2015

⑦

DETAIL NUMBER	NUMBER OF SHEETS	TITLE	CURRENT DATE
EJ3AA	1 or 2	EXPANSION JOINT DETAILS	6-16-14
EJ4N	1 or 2	EXPANSION JOINT DETAILS	6-16-14
PC-2G	1	70" PRESTRESSED CONCRETE I-BEAM DETAILS	3-31-06
PC-4E	1	PRESTRESSED CONCRETE 1800 BEAM DETAILS	3-31-06
PC-1L	1	PRESTRESSED CONCRETE I-BEAM DETAILS	7-12-06

*** Denotes New or Revised Special Detail to be included in projects for (beginning with) the July letting.**

Note: Details EJ3AA & EJ4N are interactive, i.e. designers and detailers choose details based upon railing type and angle of crossing. Place all details appropriate for the project, structure specific information, and the Expansion Joint Device quantity on the sheet. The sheet shall then be added to the plans as a normal plan sheet.

Detail PC-1L, PC-2G and PC-4E shall have structure specific information and quantities added to the sheet. The sheet shall then be added to the plans as a normal plan sheet.

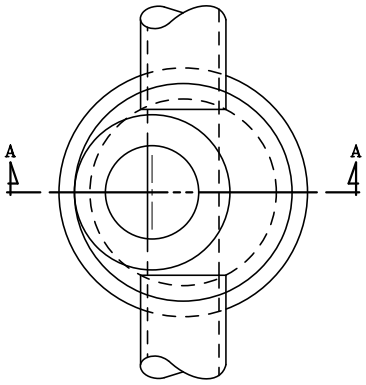

PLAN VIEW

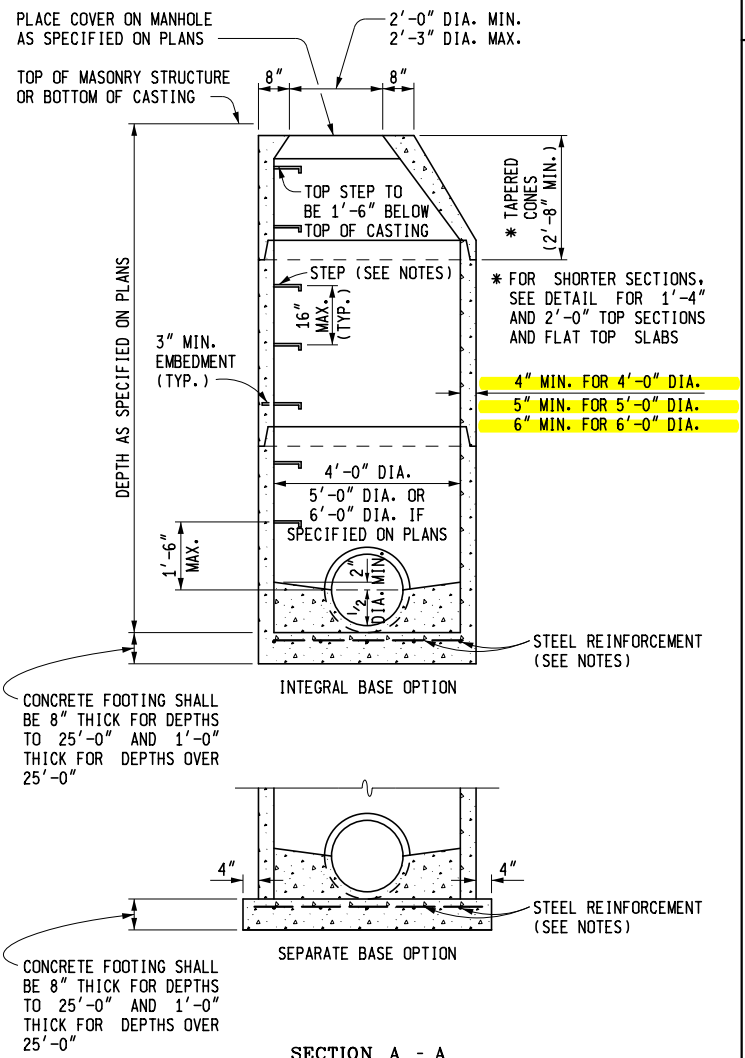

SECTION A - A

TYPICAL MANHOLE

PRECAST REINFORCED CONCRETE SHOWN
OTHER OPTIONS INCLUDE CONCRETE BLOCK, BRICK, OR CAST-IN-PLACE WALL SECTIONS
SEE TYPICAL WALL SECTIONS FOR WALL THICKNESS

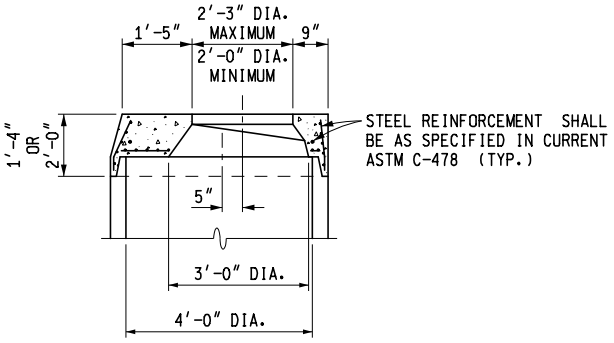

DETAIL FOR 1'-4" & 2'-0" TOP SECTIONS

SHAPE MAY VARY FROM DETAIL SHOWN BUT MUST COMPLY WITH ASTM C-478 AND JOINTS SHALL BE COMPATIBLE WITH THE RISER

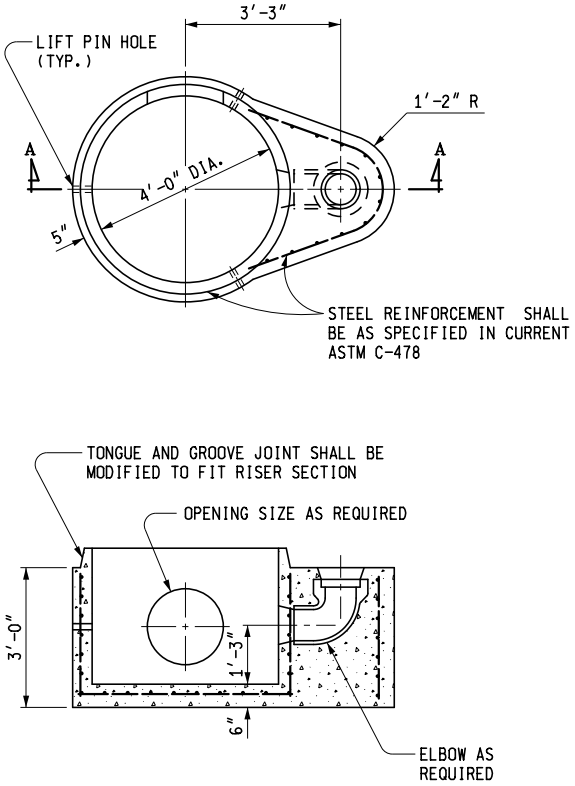

SECTION A - A

TYPICAL PRECAST REINFORCED BOTTOM SECTION FOR DROP MANHOLE

MDOT Michigan Department of Transportation

PREPARED BY DESIGN DIVISION

DRAWN BY: B.L.T.

CHECKED BY: W.K.P.

DEPARTMENT DIRECTOR
Kirk T. Steudle

APPROVED BY: _____
DIRECTOR, BUREAU OF FIELD SERVICES

APPROVED BY: _____
DIRECTOR, BUREAU OF HIGHWAY DEVELOPMENT

MICHIGAN DEPARTMENT OF TRANSPORTATION
BUREAU OF HIGHWAY DEVELOPMENT STANDARD PLAN FOR

DRAINAGE STRUCTURES

F.H.W.A. APPROVAL	4-2-2015 PLAN DATE	R-1-G	SHEET 1 OF 9

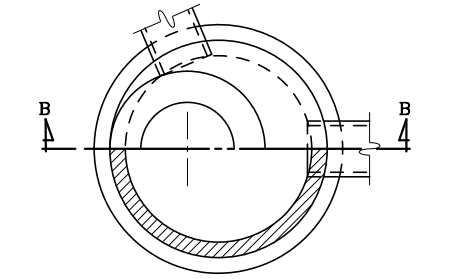

HALF SECTION A - A

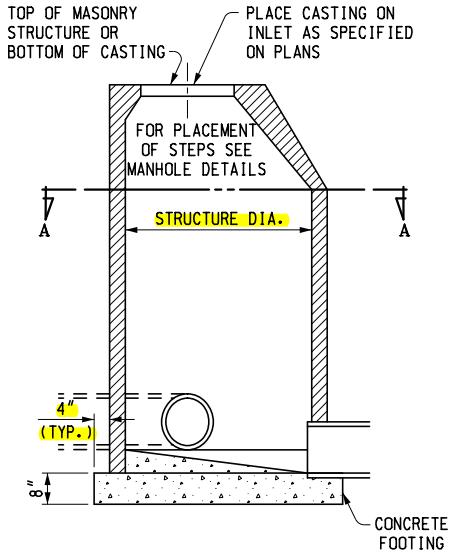

SEE MANHOLE DETAILS FOR SIZE AND BASE OPTIONS

SECTION B - B

INLET

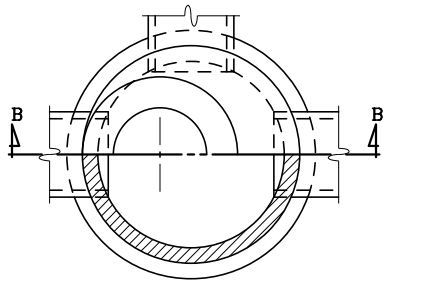

HALF SECTION A - A

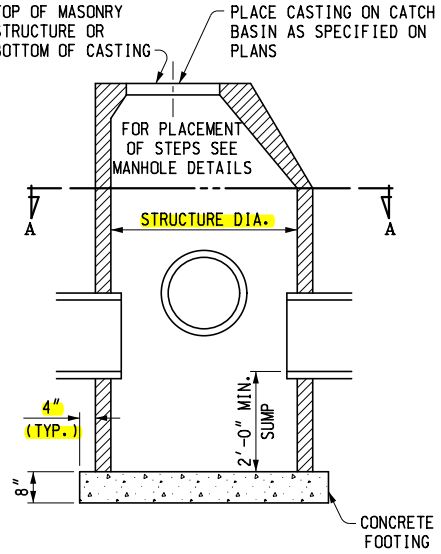

SEE MANHOLE DETAILS FOR SIZE AND BASE OPTIONS

SECTION B - B

CATCH BASIN

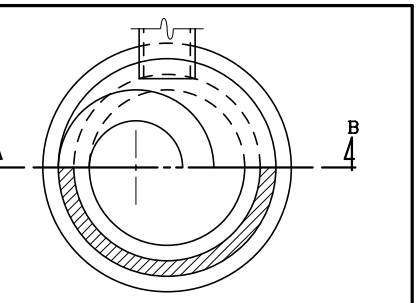

HALF SECTION A - A

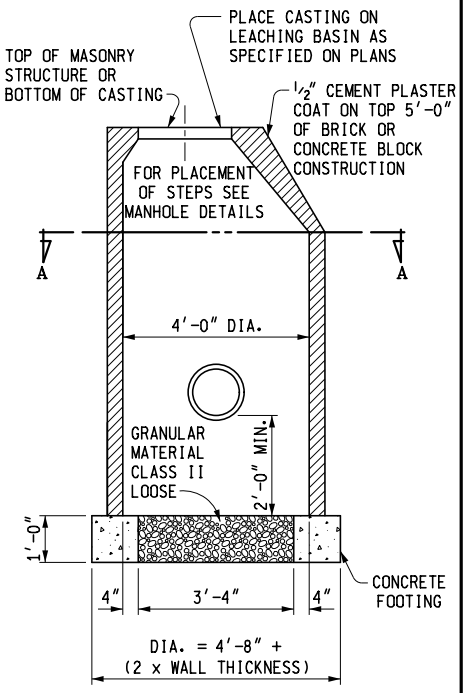

SEE MANHOLE DETAILS FOR BASE OPTIONS

SECTION B - B

LEACHING BASIN

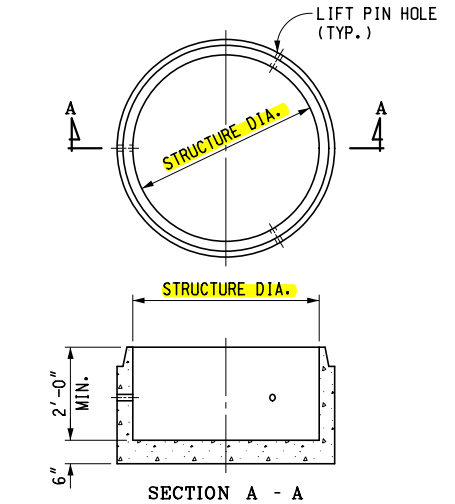

SECTION A - A

SEE MANHOLE DETAILS FOR SIZE AND BASE OPTIONS

PRECAST SUMP FOR PRECAST RISERS

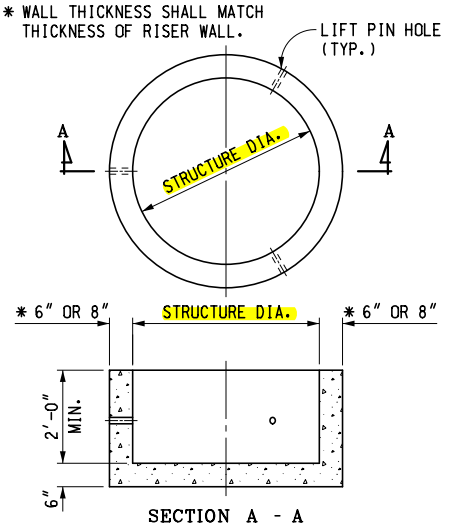

SECTION A - A

SEE TYPICAL BRICK AND BLOCK SECTION FOR SIZE AND BASE OPTIONS

PRECAST SUMP FOR BRICK OR BLOCK CONSTRUCTION

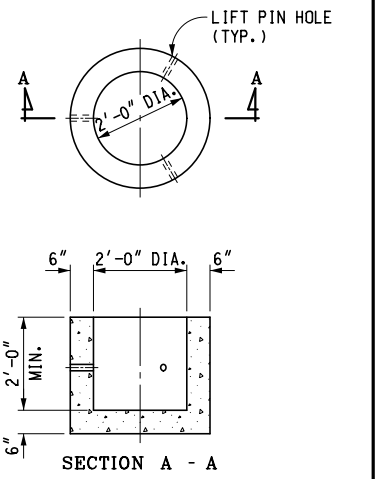

SECTION A - A

PRECAST SUMP FOR 2'-0" DIA. STRUCTURES

MICHIGAN DEPARTMENT OF TRANSPORTATION

BUREAU OF HIGHWAY DEVELOPMENT STANDARD PLAN FOR

DRAINAGE STRUCTURES

F.H.W.A. APPROVAL	4-2-2015 PLAN DATE	R-1-G	SHEET 2 OF 9

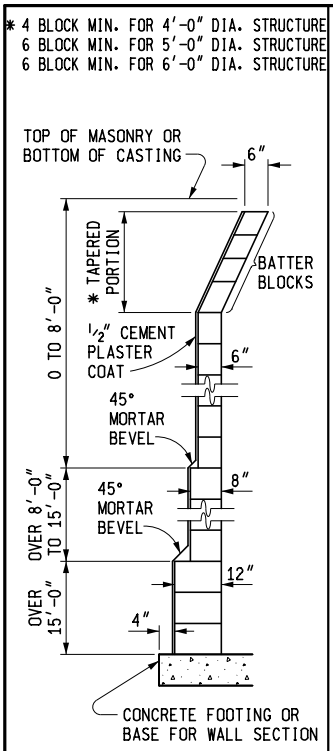

TYPICAL CONCRETE BLOCK WALL SECTION

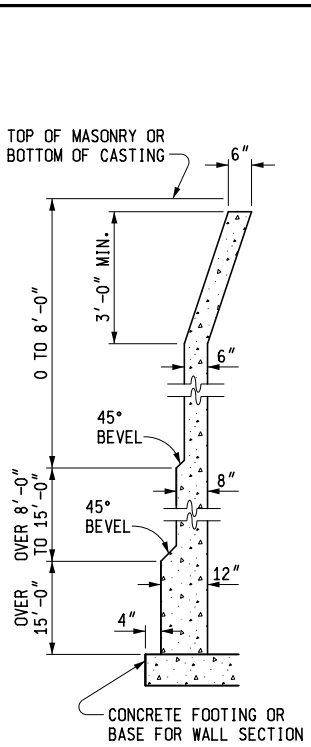

TYPICAL CAST-IN-PLACE CONCRETE WALL SECTION

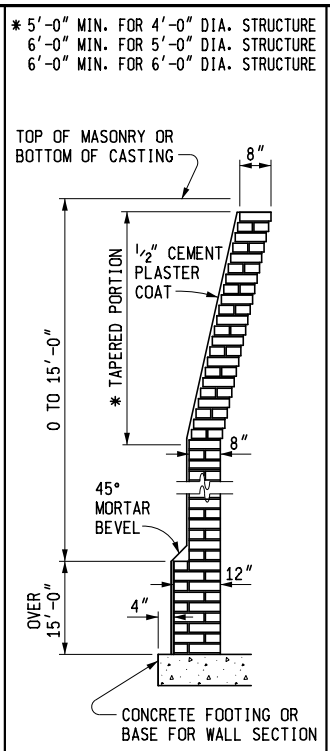

TYPICAL BRICK WALL SECTION

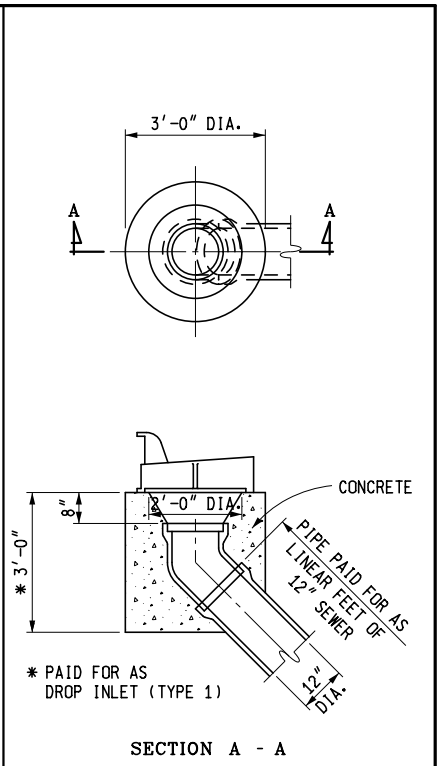

DROP INLET (TYPE 1)

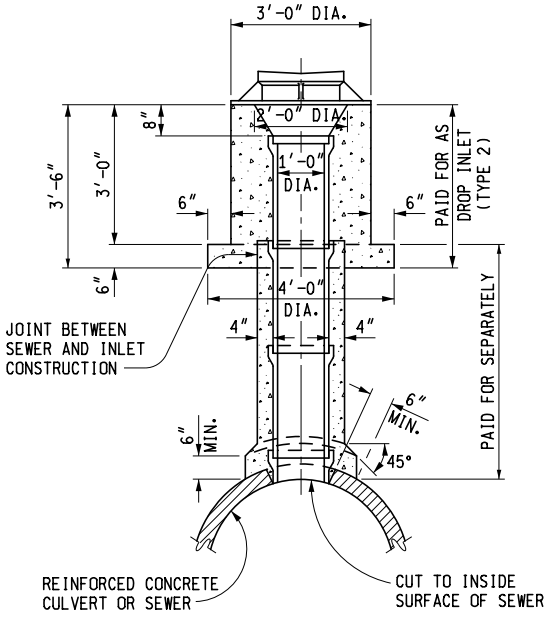

BACKFILL SHALL BE PLACED TO BOTTOM OF INLET AND COMPACTED BEFORE CONSTRUCTING THE INLET

DROP INLET (TYPE 2)

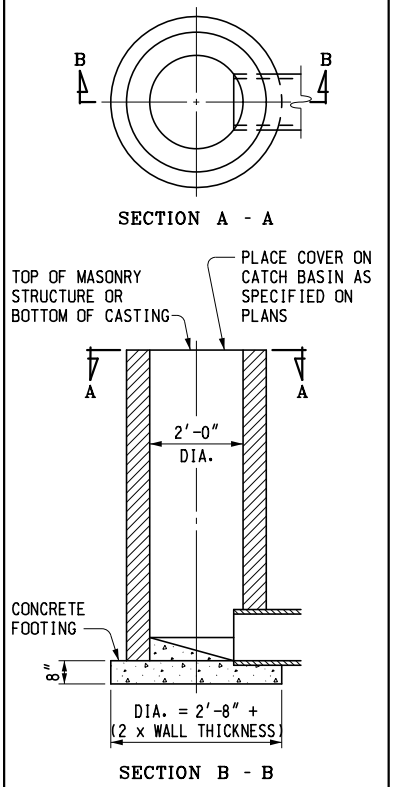

INLET

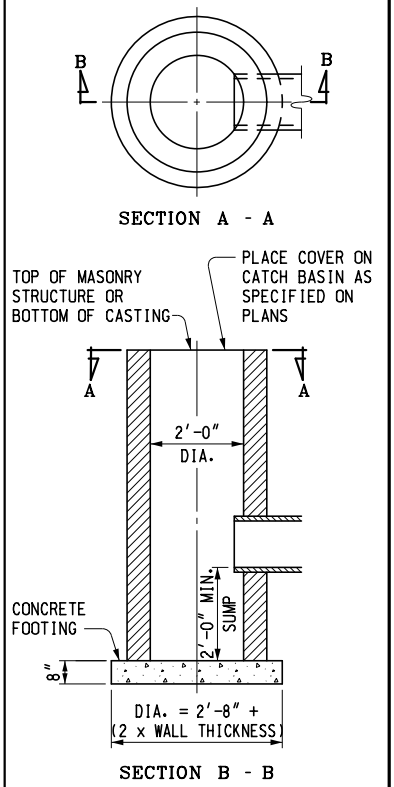

CATCH BASIN

MICHIGAN DEPARTMENT OF TRANSPORTATION
BUREAU OF HIGHWAY DEVELOPMENT STANDARD PLAN FOR

DRAINAGE STRUCTURES

F.H.W.A. APPROVAL	4-2-2015 PLAN DATE	R-1-G	SHEET 3 OF 9

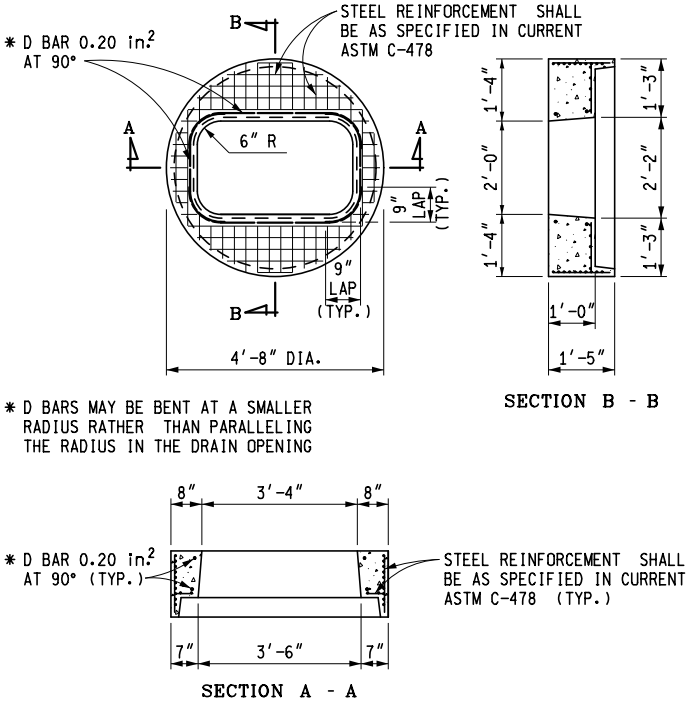

PRECAST FLAT SLAB TOP FOR PRECAST CONCRETE STRUCTURE, 2' x 4' CASTING

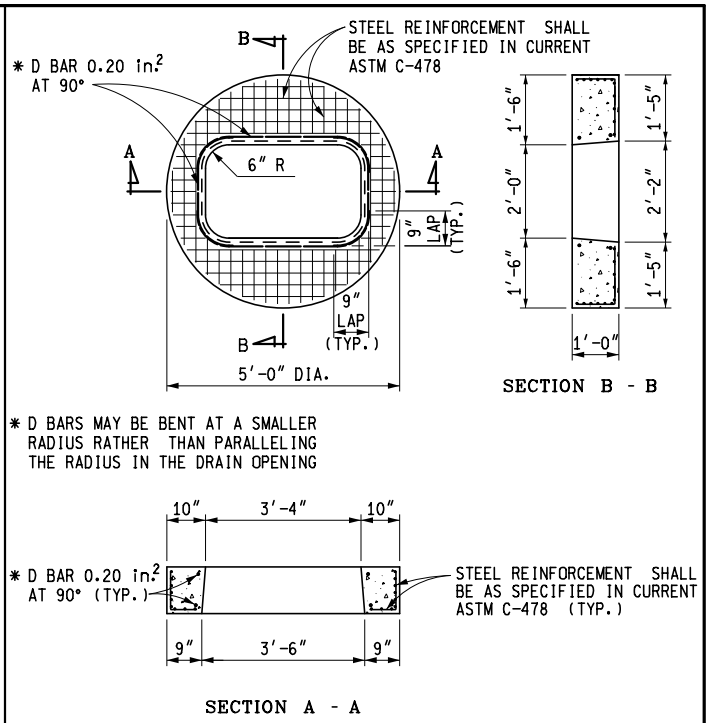

PRECAST FLAT SLAB TOP FOR MASONRY STRUCTURE, 2' x 4' CASTING

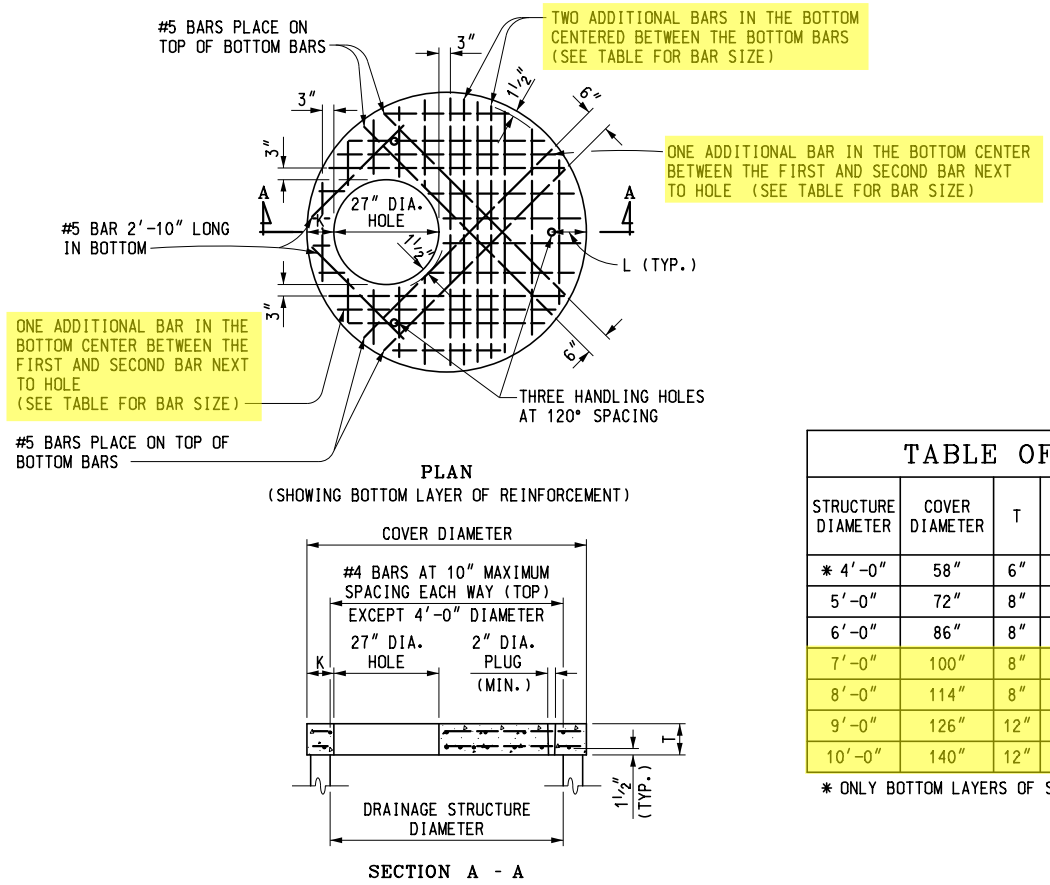

PRECAST REINFORCED CONCRETE FLAT SLAB TOP

TABLE OF DIMENSIONS

STRUCTURE DIAMETER	COVER DIAMETER	T	K	L	BAR MAXIMUM SPACING (BOTTOM EACH WAY)
* 4'-0"	58"	6"	6"	8"	#5 AT 6"
5'-0"	72"	8"	7"	9"	#5 AT 7"
6'-0"	86"	8"	8"	10"	#5 AT 6"
7'-0"	100"	8"	9"	11"	#5 AT 5"
8'-0"	114"	8"	9"	11"	#6 AT 6"
9'-0"	126"	12"	10"	12"	#5 AT 6"
10'-0"	140"	12"	11"	13"	#5 AT 6"

* ONLY BOTTOM LAYERS OF STEEL NECESSARY

MICHIGAN DEPARTMENT OF TRANSPORTATION
BUREAU OF HIGHWAY DEVELOPMENT STANDARD PLAN FOR

DRAINAGE STRUCTURES

F.H.W.A. APPROVAL	4-2-2015 PLAN DATE	R-1-G	SHEET 4 OF 9

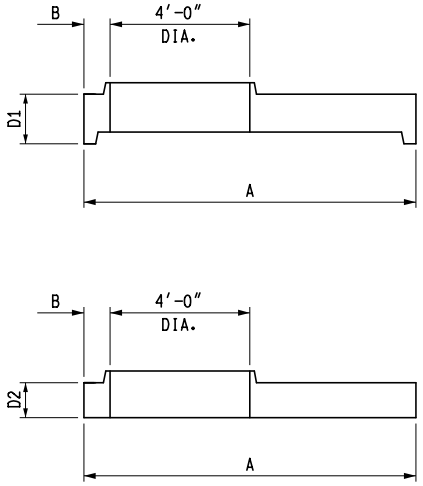

PRECAST REDUCER CAP

REDUCER CAP DIMENSIONS				
STRUCTURE DIAMETER	CAP DIAMETER "A"	B	CAP DEPTH "D1"	CAP DEPTH "D2"
7′-0″	101½″	8¾″	1′-5″	12″
8′-0″	114″	9″	1′-5″	12″
9′-0″	128″	10″	1′-5″	12″
10′-0″	140″	10″	1′-6″	12″

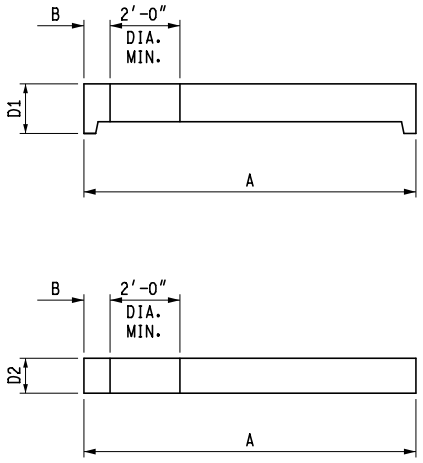

PRECAST FLAT SLAB TOP

FLAT SLAB TOP DIMENSIONS				
STRUCTURE DIAMETER	COVER DIAMETER "A"	B	COVER DEPTH "D1"	COVER DEPTH "D2"
7′-0″	101½″	8¾″	1′-5″	12″
8′-0″	114″	9″	1′-5″	12″
9′-0″	128″	10″	1′-5″	12″
10′-0″	140″	10″	1′-6″	12″

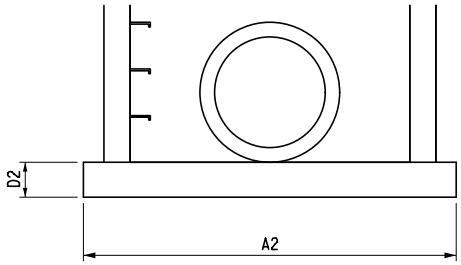

SEPARATE BASE OPTION

BASE AND RISER DIMENSIONS					
STRUCTURE DIAMETER	BASE DIAMETER "A1"	BASE DIAMETER "A2"	MIN. WALL THICKNESS "T"	BASE DEPTH "D1"	BASE DEPTH "D2"
7′-0″	101½″	108″	7″	8″	12″
8′-0″	114″	128″	8″	8″	12″
9′-0″	128″	140″	9″	8″	12″
10′-0″	140″	154″	10″	8″	12″

MICHIGAN DEPARTMENT OF TRANSPORTATION
BUREAU OF HIGHWAY DEVELOPMENT STANDARD PLAN FOR

DRAINAGE STRUCTURES

F.H.W.A. APPROVAL	4-2-2015 PLAN DATE	R-1-G	SHEET 5 OF 9

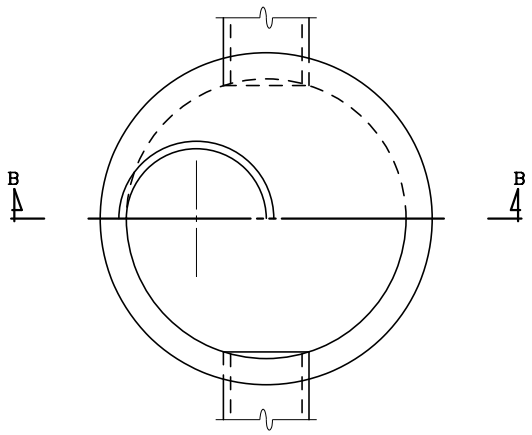

HALF SECTION A - A

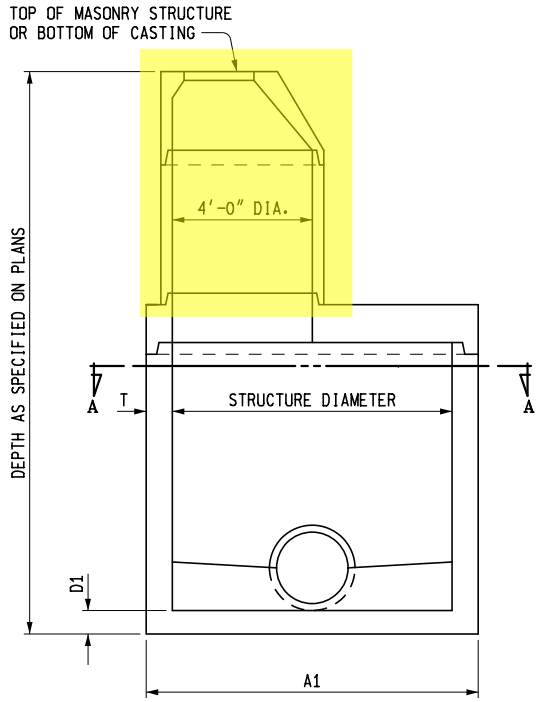

SECTION B - B
SHOWING REDUCER CAP

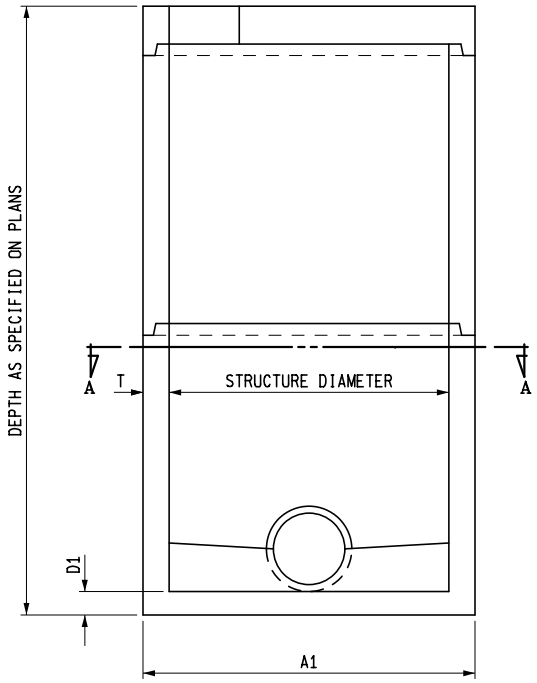

SECTION B - B
SHOWING FLAT SLAB TOP

PRECAST MANHOLE

MICHIGAN DEPARTMENT OF TRANSPORTATION
BUREAU OF HIGHWAY DEVELOPMENT STANDARD PLAN FOR

DRAINAGE STRUCTURES

F.H.W.A. APPROVAL	4-2-2015 PLAN DATE	R-1-G	SHEET 6 OF 9

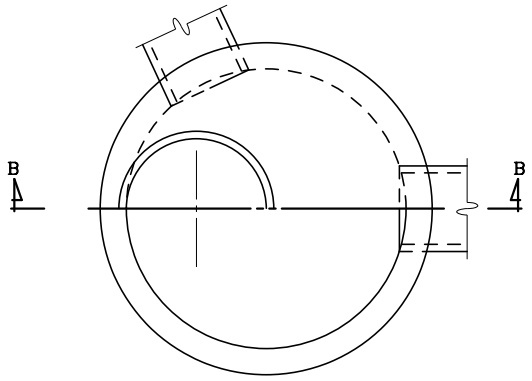

HALF SECTION A - A

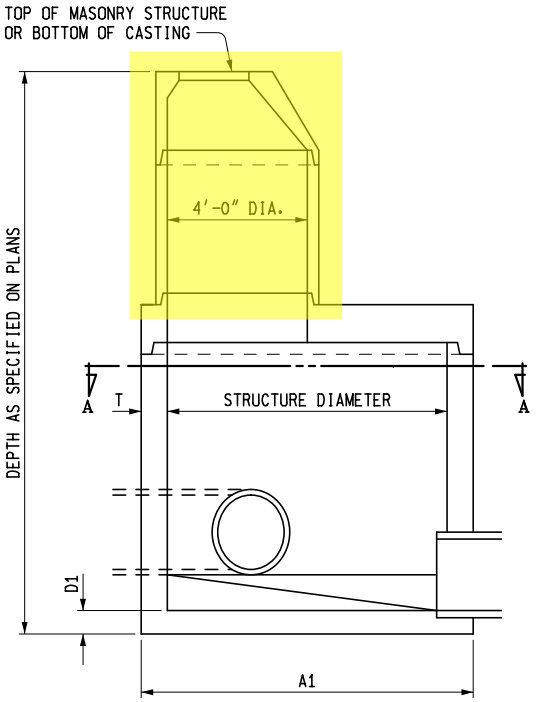

SECTION B - B
SHOWING REDUCER CAP

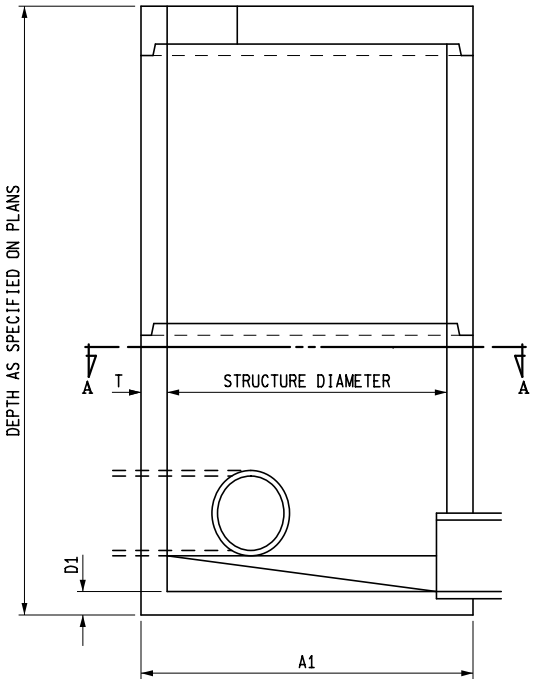

SECTION B - B
SHOWING FLAT SLAB TOP

PRECAST INLET

MICHIGAN DEPARTMENT OF TRANSPORTATION
BUREAU OF HIGHWAY DEVELOPMENT STANDARD PLAN FOR

DRAINAGE STRUCTURES

F.H.W.A. APPROVAL	4-2-2015 PLAN DATE	R-1-G	SHEET 7 OF 9

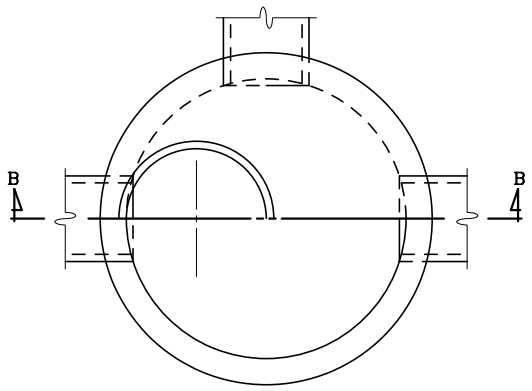

HALF SECTION A - A

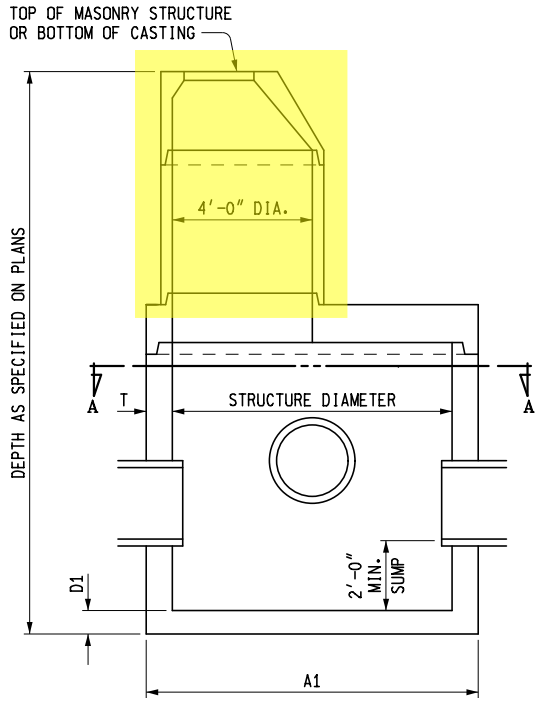

SECTION B - B
SHOWING REDUCER CAP

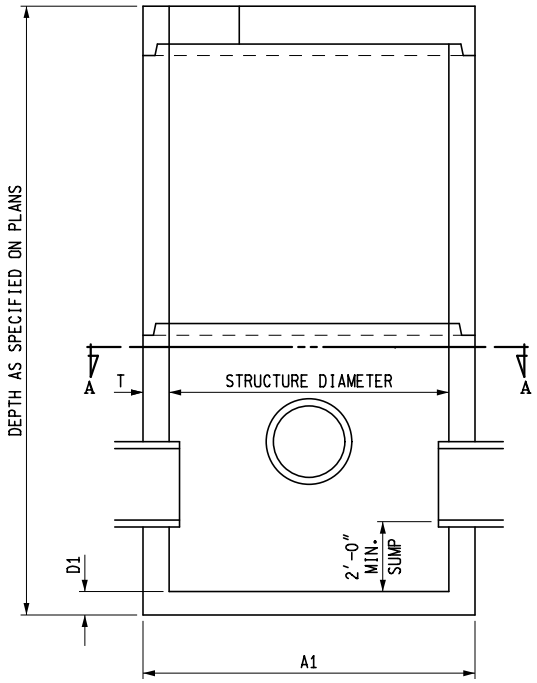

SECTION B - B
SHOWING FLAT SLAB TOP

PRECAST CATCH BASIN

MICHIGAN DEPARTMENT OF TRANSPORTATION
BUREAU OF HIGHWAY DEVELOPMENT STANDARD PLAN FOR

DRAINAGE STRUCTURES

F.H.W.A. APPROVAL	4-2-2015 PLAN DATE	R-1-G	SHEET 8 OF 9

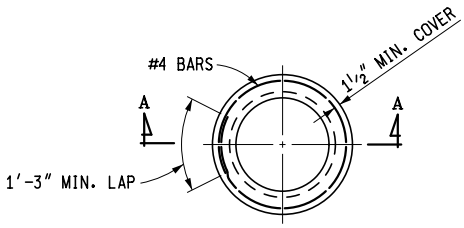

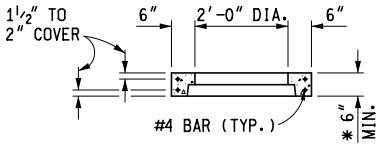

SECTION A - A

* WHEN RISER TONGUE LENGTH IS GREATER THAN 3", USE 2 TIMES THE TONGUE LENGTH.

NOTE: PRECAST RISER SHALL FULLY ENGAGE THE TONGUE OF THE RISER PIPE.

PRECAST RISER RING

(FOR 2'-0" DIAMETER STRUCTURE)

NOTES:

THE DRAINAGE STRUCTURE COVERS ALLOWED FOR USE ON THESE DRAINAGE STRUCTURES ARE SPECIFIED IN SUBSEQUENT STANDARD PLANS AND ARE INTERCHANGEABLE ON ANY STRUCTURE.

THE TOPS OF MASONRY STRUCTURES SHALL BE SUFFICIENTLY LOW TO PERMIT PROPER ADJUSTMENT OF COVER TO GRADE USING MORTAR OR BRICK AS DIRECTED BY THE ENGINEER.

PREMIUM JOINTS ARE REQUIRED ON ALL SANITARY MANHOLES. SEE ASTM DESIGNATION C-923.

GRANULAR MATERIAL CLASS III SHALL BE USED IN BACKFILLING AROUND ALL STRUCTURES THAT FALL WITHIN THE 1:1 INFLUENCE LINES FROM THE EDGE OF PAVEMENT OR BACK OF CURB.

STEPS FOR DRAINAGE STRUCTURES SHALL BE OF AN APPROVED DESIGN AND MADE FROM CAST IRON, ALUMINUM, OR PLASTIC COATED STEEL. RUNGS SHALL BE A MINIMUM OF 10" IN CLEAR LENGTH, DESIGNED TO PREVENT THE FOOT FROM SLIPPING OFF THE END. THE MINIMUM HORIZONTAL PULL OUT LOAD SHALL BE 400 LBS. THE MINIMUM VERTICAL LOAD SHALL BE 800 LBS.

THE BELL SHALL BE REMOVED FOR THE FIRST LENGTH OF OUTLET PIPE PROJECTING THROUGH THE WALL OF THE MANHOLE.

PRECAST CONCRETE SECTIONS, SUMPS, AND FLAT TOP SLABS SHALL BE BUILT ACCORDING TO CURRENT ASTM C-478 AND ACCORDING TO DETAILS SPECIFIED ON THIS PLAN. PRECAST REINFORCED CONCRETE FLAT TOP SLAB SHALL BE MARKED TO SHOW LOCATION OF REINFORCEMENT. THE WALLS OF THE PRECAST UNITS MAY HAVE A SLIGHT TAPER TO ALLOW FOR FORM REMOVAL. PRECAST CONCRETE 2'-0" DIAMETER DRAINAGE STRUCTURES SHALL HAVE A MINIMUM 3" WALL THICKNESS WITH A 6" MINIMUM BEARING SURFACE ON TOP. SEE PRECAST RISER RING FOR 2'-0" DIAMETER STRUCTURE.

THE INSIDE DIAMETER OF PIPES ENTERING OR LEAVING PRECAST DRAINAGE STRUCTURES SHALL BE LESS THAN THE INSIDE DIAMETER OF THE DRAINAGE STRUCTURE MINUS 2'-0". A PIPE LEAVING A 2'-0" DIAMETER DRAINAGE STRUCTURE IS ALLOWED TO HAVE 1'-0" INSIDE DIAMETER OR LESS.

THE NUMBER OF PIPE OPENINGS IN A RISER SHALL BE DETERMINED BY THE DESIGNER. SPACING BETWEEN OPENINGS SHALL BE 1'-0" MINIMUM. OPENINGS MAY BE CONSTRUCTED BY CASTING OR BY DRILLING THE CURED CONCRETE.

PRECAST CONCRETE FOOTINGS OR BASES SHALL BE REINFORCED WITH #4 BARS SPACED AT 1'-0" BOTH WAYS OR WITH TWO LAYERS OF WELDED WIRE FABRIC OF EQUIVALENT CROSS SECTIONAL AREA LAID AT RIGHT ANGLES AND WIRED TOGETHER. REINFORCEMENT SHALL BE PLACED IN TOP OF FOOTING AND SHALL BE MARKED.

PRECAST CONCRETE FOOTINGS SHALL BE SUPPORTED BY A COMPACTED 6" GRANULAR SUBBASE.

THE MINIMUM WALL THICKNESS FOR ALL 2'-0", 4'-0", 5'-0", AND 6'-0" DRAINAGE STRUCTURES USING CONCRETE BLOCK, BRICK, OR CAST-IN-PLACE CONCRETE SHALL BE AS SPECIFIED IN TYPICAL WALL SECTIONS.

THE CONICAL SECTION OF MANHOLES OR CATCH BASINS CONSTRUCTED OF BLOCK OR BRICK SHALL BE SHROUDED WITH GEOTEXTILE FABRIC TO A MINIMUM DEPTH OF 5'-0" OR THROUGH THE FROST ZONE. ENOUGH GEOTEXTILE MATERIAL SHALL BE LEFT ON THE TOP (8" OR MORE) TO ROLL OVER THE TOP OF THE CONE.

PREFORMED HIGH DENSITY POLYSTYRENE FILLER PIECES MAY BE USED TO CHANNEL FLOW IN THE BOTTOM OF MANHOLES PROVIDED THEY HAVE AT LEAST 2" OF CONCRETE COVER. THE USE OF THIS MATERIAL FOR CHANNEL FLOW IS RESTRICTED TO MANHOLES WHERE THE BOTTOM SECTION IS NOT SUBJECT TO FREEZING. THE USE OF THIS MATERIAL MUST BE APPROVED BY THE ENGINEER.

MICHIGAN DEPARTMENT OF TRANSPORTATION
BUREAU OF HIGHWAY DEVELOPMENT STANDARD PLAN FOR

DRAINAGE STRUCTURES

F.H.W.A. APPROVAL	4-2-2015 PLAN DATE	R-1-G	SHEET 9 OF 9

3.04.01 (revised 2006)

Point of Rotation

Superelevation may be obtained by rotating about the center or about inside or outside pavement edge profiles. Currently our crowned two-way and two-lane roadways are rotated about the pavement centerline per Standard Plan R-107-Series. This method reduces the edge distortion because the required change in elevation is distributed along both pavement edges rather than all on one edge. Uncrowned or straight cross slope pavements, such as ramps, are rotated about the alignment edge. Special consideration should be given to superelevating wider pavements (i.e., three-lane or five-lane sections) as the point of rotation should be determined by site conditions. See Standard Plan R-107-Series.

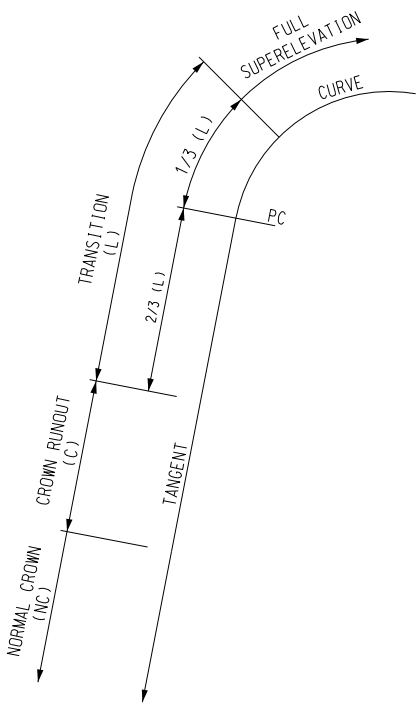

3.04.02 (revised 4-20-2015)

Superelevation Transitions

The superelevation transition consists of the superelevation runoff (or transition (L)) and tangent runout (or crown runout (C)). The superelevation runoff section consists of the length of roadway needed to accomplish a change in outside-lane cross slope from zero (flat) to full superelevation, or vice versa. The superelevation runoff is determined by the width of pavement (W), superelevation rate (e), and the relative gradient along the edges of pavement (Δ%). As indicated in Standard Plan R-107-Series, one third of the superelevation runoff length is located in the curve. When this can not be achieved, the portion of runoff located in the curve may be increased to not more than 40%. The tangent runout section consists of the length of roadway needed to accomplish a change in outside-lane cross slope from the normal cross slope rate to zero (flat), or vice versa. The tangent runout is determined by the width of pavement (W), normal cross slope/normal crown (N.C.), and the relative gradient. Relative gradient values correspond to the superelevation rates. The gradient may be increased as needed up to the maximum relative gradient for the design speed. A design exception is required for values exceeding the maximum relative gradient.

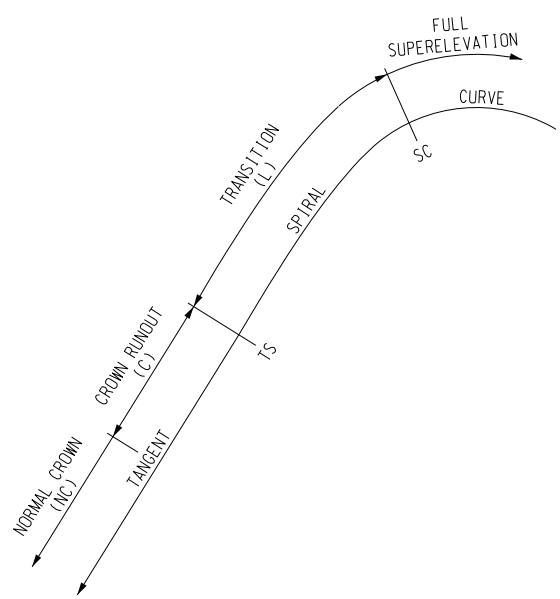

4.02

STORM SEWER DESIGN

4.02.15 (revised 7-10-2006)

Sewer Bulkheads

Only sewer bulkheads larger than 12" in diameter will be measured for payment. The cost of placing sewer bulkheads 12" in diameter and less will not be paid for separately but payment for the work will be considered as having been included in the contract unit prices bid for other contract items. The sewer bulkhead location should be shown on the plans

4.02.18 (revised 11-28-2011)

Storm Sewer Under Structures

Storm sewers within the stress influence of the footings shall be protected by concrete encasement or other approved methods. If the designer has any question about which the stress influence lines in a particular structure, he should contact the Geotechnical Services Unit of Construction Field Services Division.

4.02.20 (revised 4-20-2015)

Jacked-in-Place Sewers

See Drainage Manual Section 7.4.8.1.

At times it may be necessary to install sewer pipe by jacking or tunneling methods. A sewer installed by jacking or tunneling may be considered a special design, therefore a request to determine the design of the pipe should be made to the Design Engineer - Municipal Utilities. However, some general jacking information for designers is listed below.

1. The smallest practical pipe size that can be jacked is 36" in diameter. However, a smaller size pipe may be inserted inside a jacked casing and the void outside the sewer filled with a flowable fill.

2. Concrete pipe is to be specified when jacking a storm sewer.

3. If circumstances require jacking a pipe smaller than 36", a C76 Wall Class 5 pipe shall be specified.

4. Jacking a storm sewer will normally be more economical than an open trench installation when either the fill height exceeds approximately 16' or maintaining traffic is beneficial. The situation should be reviewed at The Plan Review Meeting and a recommendation provided to the designer.

5. Jacking will usually continue on a 24-hour-per-day operation due to the pipe's tendency to set up if the jacking operation is interrupted for more than a few hours

6. Jacking is usually done from the low side up grade to allow water to drain out during the jacking operation. However, it may also be done by jacking down grade, which allows for better control of the pipe grade due to the weight of the pipe.

4.02.20 (continued)

Jacked-in-Place Sewers

7. Pipe that is being jacked is subjected to vertical loads from the weight of earth and horizontal loads from the jacking pressure. The resultant vertical earth load on a horizontal plane at the top of the bore is a function of the weight of earth above the bore minus the upward friction forces, minus the cohesion of the soil along the limits of the prism above the bore.

    a. The vertical load from the weight of earth and possible live load will determine the class of pipe to be specified.

    b. The cross-sectional area of the concrete pipe is adequate to resist axial compression from jacking, and unless unusual circumstances exist, little or no gain is accomplished in increasing crushing resistance by specifying a higher class of concrete pipe than required for vertical loads.

    c. Soil borings are required when storm or culvert pipe is installed by jacking or tunneling. Contact, coordination, and follow up with the Region/TSC Soils Engineer as described in the following section is important in reducing potential risks to the operation.

4.02.21 (revised 11-28-2011)

Storm Sewer Soil Borings

The plans and specifications do not automatically provide for the additional work required to install sewers through areas of unstable soils. Therefore, soil borings must be obtained and shown on the plans to identify where remedial treatment is necessary. Corrective treatment usually means undercutting and backfilling. Also, in areas having a high water table, a well point system may sometimes be considered. The designer should use the following procedures.

4.02.21 (continued)

1. The need for soil borings should be discussed at the scope verification meeting. The Project Manager should provide the Region/TSC Soils Engineer with any necessary information for locating proposed sewer lines. The Region/TSC Soils Engineer will then provide the Project Manager with pertinent soils data and recommendations.

2. Follow up requests to be sure soil borings are received. The complete boring data shall be made part of the plans and proposal. The data report will include the log of borings, the complete shear report, the weight and moisture report, as well as a plot of the shear strength. The report by the Geotechnical Services Unit, Construction Field Services Division can be reproduced on a plan sheet.

3. When unstable soils are encountered, the Designer and the Geotechnical Services Unit, Construction Field Service Division engineers should confer to determine the best method of correction.

4. Estimated quantities for the correction should be included in the plans.

5. Where unstable soil conditions, or obstructions other than rock, require excavation of the sewer trench below the elevation shown on the plans, such excavation shall be made to the dimensions authorized by the Engineer. The pay item "Trench Undercut and Backfill" is used to pay for this excavating and backfilling of the trench with a specified aggregate up to the bottom of the trench elevation on the plans. Many jobs will include short runs of relatively shallow depth sewers where undercutting is unnecessary, therefore, the designer will have to make some judgement when requesting soil borings.

6.03.03

Philosophy of the Use of HMA Surfacing

Both the HMA and portland cement concrete industries are vital parts of Michigan's economy. The Department therefore endeavors to make impartial use of both materials. Because of its adaptability to the maintenance of traffic, needing only to cool before traffic can be allowed on it, asphalt is the common type of resurfacing in use. It is also used rather extensively as the pavement type on new construction in the areas of the state having granular soils.

The purpose of resurfacing is to extend the useful life of a pavement for a given length of time, usually for a period of 8 to 12 years, but sometimes for as little as 3 to 5 years. If no design life is specified when a resurfacing project is assigned, assume it to be 10 years. In some situations a shorter design life may be desired.

6.03.04 (revised 4-20-2015)

Surface Preparation

A. Conditioning Aggregate Base / Surface

When existing aggregate base/surface remains in place see Section 6.02.09D.

6.03.04 (continued)

B. Concrete or Composite (HMA on Concrete) Pavement

1. Crown and Superelevation Modification

Current methods for modifying pavement crown and superelevation are expensive and need careful consideration. Many resurfacing projects call for modifying the crown from the former parabolic configuration to the current 2% cross-slope and/or upgrading pavement superelevation. Modification of pavement slope is typically accomplished by wedging with HMA and/or cold-milling. The need for modification will be based on a safety analysis and applicable design standards. Crown modification may include changing the shape, changing the rate of the cross slope, adjusting the crown point location or a combination of the three. Existing pavement slope(s) should be thoroughly reviewed during the project design (including cross-sectioning where applicable) to minimize construction problems and cost overruns.

2. Cleaning Pavement

The ***Standard Specifications for Construction*** state that the pavement surface must be clean prior to resurfacing. Some designers have purposely omitted the item when milling is done on the assumption that sweeping after the milling accomplishes the desired result. The fallacy with this is that several weeks can elapse between milling and resurfacing, giving the pavement time for dirt to be tracked upon it once more. The pay item "Pavt, Cleaning", measured as a lump sum, should therefore be included in all resurfacing projects. It can be deleted during construction if for some reason it is not needed.

6.03.04B10 (continued)

Surface Preparation

There are two pay items involved with Detail 7 and 8 joint repairs, "Pavt Joint and Crack Repr, Det __" and "Hand Patching". See preceding Section 6.03.04B(9).

If the project includes milling off the old HMA surface, it may be recommend at The Plan Review that the milling machine drum be lowered perhaps 1" into the deteriorated joint to remove the deteriorated concrete and debris. If this is done, the contractor is merely compensated for the additional milled material that is removed, and the additional new surfacing material required to fill the deeper void at the joint. If, after the milling has been done, it appears that the joint is in such condition as to require a bonafide Detail 7 or 8 joint repair, then the engineer will order that this be done. The subsequent repair would then be paid for as an ordinary Detail 7 or Detail 8 joint repair.

11. Pavement Patching

Pavement patching consists of a cast in place concrete patch, in most situations. A concrete patch is used when a Detail 7 or Detail 8 repair method is not sufficient. Standard Plan R-44-Series illustrates a concrete patch design. Full depth HMA patches are used in lieu of concrete patches only when maintaining traffic concerns warrant the change. Full depth HMA patches are typically recommended on low commercial volume routes. Full depth HMA patches should only be used on freeways when maintaining traffic is an overriding concern.

6.03.04B11 (continued)

Backfill material for a full depth HMA patch is mainline top course mixture and is paid for as Hand Patching. See Section 6.03.09.

The patching mixture will be placed flush with the surface of the existing pavement. The patch is paid for as “Pavt Repr, Rem” in square yards of material removed, and as “Hand Patching” in tons to the cover the HMA mixture put back.

12. Guidelines for Preparing a Deteriorated Jointed Reinforced Concrete Pavement for an HMA Overlay

The Engineering Operations Committee has approved the following guidelines for repairs to jointed reinforced concrete pavement in preparation for an HMA overlay.

1. Traffic Volume Range 0-5,000 ADT (per roadway)

   Replace all joints and cracks having a distress severity level of 1 with a Detail 8 repair. Remove all cold patch material and loose concrete from all remaining joints and cracks and replace with a Detail 7 patch. All previously placed concrete repairs are to be left as is, except cold milling of concrete repairs faulted more than ¾” is optional (in lieu of replacement).

6.08.06 (revised 4-20-2015)

Building Entrances

When constructing or reconstructing a public sidewalk, access to adjacent buildings might be impacted. Adjusting grade or cross slope on the sidewalk can change or compromise connectivity to adjacent buildings.

Accessibility requirements and responsibilities differ between public and private entities. In general, access to buildings that abut or encroach on the public right–of-way is the responsibility of the building owner. The building owner is accountable for accessibility under Title III of the ADA if the building provides services or accommodations to the public. When constructing sidewalks, the Department's responsibility is to construct sidewalks and street crossings compliant with the ADA under Title II. Private residences that do not serve the public are not regulated by the ADA.

While the building owner is responsible for ADA compliance, the building owner may be entitled to restitution or compensation under the Uniform Relocation Act (URA) of 1970. When obtaining the Consent to Construct Sidewalk, Region Real Estate should discuss both temporary and permanent access with the property owners. See Section 5.05.02.

6.08.06 (continued)

A. Building Access Alterations

When steps or ramps are removed or altered by sidewalk construction, The Department will offer to reconstruct or restore them. To promote accessibility, the proposed replacement will be one that is compliant with ADA Title III to the extent feasible. The designer should consult the Roadside Development Unit for ADA building access requirements and accessibility options. The work necessary to make the facility accessible is eligible for federal participation.

The Department is not a Title III enforcement agency. If a property owner refuses a compliant replacement, the Department will honor the owner's preference and document the refusal. When an owner's preference of steps over ramps is accommodated, ADA guidelines for steps will be followed to the extent feasible.

The feasibility of accommodating private access will be based largely on structural and spatial limitations. As previously stated, the Department's obligation and priority is for compliant sidewalks and street crossings. If the installation of an ADA-compliant private access compromises the accessibility of the sidewalk, this may be a basis for a determination of technical infeasibility for full compliance of the building access.

In all cases, replaced access to a building entrance must not be made less accessible than the previous existing condition. If restoration to the existing level of accessibility is technically infeasible, the building owner may be entitled to compensation for the loss of the entrance. The compensation would be a Real Estate action and ADA compliance remains the owner's responsibility.

Existing building access can also be replaced by the property owner, under the provisions of existing permits, without action by MDOT. New installation of stairs/ramps undertaken by the property owner in public rights-of-way would require a permit. In all cases, stairs/ramps once constructed become the responsibility (ownership and maintenance) of the private property owner.

6.08.06 (continued)

Building Entrances

B. Historic Buildings and Districts

Historic Preservation laws must be taken into consideration when altering access to a building entrance. The replaced access must not threaten or destroy the historic significance of buildings or districts. Historic preservation requirements supersede ADA requirements and may constitute an ADA compliance technical infeasibility.

Obtaining permanent easement or fee purchase in order to meet ADA requirements in an historic district is considered a threat to historic significance. Therefore, any alterations must be made within the right of way or by obtaining consent to construct sidewalk. See Section 5.05.02 for consent to construct sidewalk.

If buildings appearing to be 50 or more years in age are located on the project, contact the appropriate Historian in the Bureau of Development Environmental Services Section early in the planning/scoping process. If the Historian verifies historic properties or districts are present, a determination of impact will be made. Designers should work with the MDOT Historian and the Roadside Development Unit to ensure the viability of alternatives and to gain consensus on the strategy to maximize accessibility. An on-site review with all stakeholders held early in the process can expedite the resolution of conflicts. Depending on the severity of the impact, the Historian may need to subsequently coordinate with the State Historic Preservation Officer (SHPO) to assess the impact and discuss alternatives.

13.02.05 (continued)

Clearing – Showing on Plans

CLASSIFICATION OF TREES AND BRUSH

	CLEARING	AVERAGE SPACING OF TREES CENTER TO CENTER		
CLASSIFICATION	SIZE	LIGHT	MEDIUM	HEAVY
1ST CLASS	Diameter Greater Than 36"	15' Or More	10' to 15'	10' Or Less
2ND CLASS	Diameter Greater Than 18" to 36"	20' Or More	10' to 20'	10' Or Less
3RD CLASS	6" to 18" Diameter	10' Or More	3' to 10'	3' Or Less
4TH CLASS	Brush Less Than 6" In Diameter	One Half Covered	Two Thirds Covered	Completely Covered

13.02.06 (revised 4-20-2015)

Clearing - Recheck

When more than one year has elapsed between the time of The Plan Review and the advertising date of a project, it may be necessary to request a field recheck on the clearing limits and classification of the trees and brush.

13.02.07

Clearing for Fence

Clearing for Fence is the removal and disposal of trees, brush, stumps, and other vegetation located along a fence line. It also includes treating stumps and stubs within 1' of the fence line with a material to prevent the sprouting of new growth. Maximum width of the clearing zone is 8' within the right-of-way. Measurement for Clearing for Fence will be by station.

13.02.08

Clearing and Removing Trees on Freeway 4R Projects

There are often questions raised as to the limits of tree removal and clearing on freeway resurfacing, rehabilitation, restoration and reconstruction projects. There can also be disagreement in this area among designers, planners, roadside development and the FHWA, especially along the scenic expressways of our state.

The following guidelines were developed for a 1991 resurfacing project on I-75 north of Grayling. These guidelines have the approval of FHWA and concerned Department scenic and environmental specialists.

The designer should develop a special provision based on the following guidelines, and input from the Region/TSC Resource Person, the Roadside Development Unit, and Traffic and Safety using the following criteria based on existing slopes:

13.04.03 (revised 4-20-2015)

Removing Culverts and Sewers

A. Removing Pipe Culverts

The removal of driveway and crossroad culverts will be paid for separately when the old culvert is 12" or greater in diameter. Culverts less than 12" in diameter will not be paid for separately if any portion of the existing pipe is within the excavation limits of the new structure, culvert or sewer. The pay items "Culv, Rem, Less than 24 inch", "Culv, Rem, 24 inch to 48 inch", and "Culv, Rem, Over 48 inch" will include removing the pipe and any end section treatments.

If the grade of an existing roadway cross-section is changed sufficiently to cause the removal of a pipe culvert in normal grading operations, its removal will be classed as earth excavation and measured and paid for as such.

B. Removing Culverts Other Than Pipe

The pay item of "Culv, Other than Pipe, Rem" is for removal of Box and Slab Culverts. If the culvert is to be removed it will be paid for separately.

If the structure is to be extended or otherwise incorporated in the new work, only a part of the existing structure need be removed to provide a proper connection for the new work.

C. Removing Culvert Ends

It is the intent of the ***Standard Specifications for Construction*** that the pay items "Culv, End, Rem, Less than 24 inch", "Culv, End, Rem, 24 inch to 48 inch", and "Culv, End, Rem, Over 48 inch" apply only to pipe culverts and should be used whenever an end section must be removed, to extend a culvert, or change the end section. Where box or slab culverts are concerned, the pay item of "Culv, Other than Pipe, Rem" shall apply. The appropriate Culv End Rem pay item is used when the entire culvert is to be removed or when just a portion is to be removed. A note describing what is covered will help the contractor to bid the item. The Culv End Rem pay item includes the removal of any end treatment regardless of size, including end sections, sloped end sections, and headwalls.

D. Removing Sewers

The pay items "Sewer, Rem, Less than 24 inch", "Sewer, Rem, 24 inch to 48 inch", and "Sewer, Rem, Over 48 inch" are covered in the ***Standard Specifications for Construction***. The provisions are very similar to the culvert removal items. The pay unit for the Sewer, Rem pay items is in "feet", however, instead of the "each" pay unit used for removing culverts.

E. Salvaging Culvert End Sections

Culvert end sections to be salvaged and re-used shall be removed without damage and stored outside the construction limits. The designer should consider salvaging end sections if The Plan Review or other field inspections show ends to be in good condition, but need to be reset because of culvert extensions or other reasons.

13.04.04 (revised 12-22-2011)

Removing Miscellaneous Structures & Materials

A. Pay Items

Pay items for removing miscellaneous structures include the following:

Pavt, Rem
Curb, Rem
Gutter, Rem
Curb and Gutter, Rem
Sidewalk, Rem
Basement Cleanout
Track, Rem
Utility Pole, Rem
Structures, Rem
Structures, Rem Portions
Culv, Other than Pipe, Rem
Masonry and Conc Structure, Rem
Guardrail, Rem
Fence, Rem
Concrete Barrier, Rem
Glare Screen, Rem

B. Removing Pavement

Removal of HMA pavements and concrete or masonry pavements is covered in the ***Standard Specifications for Construction***. The specifications for HMA pavements are somewhat confusing as they include both removing pavement and removing HMA surface items. The table in Section 6.03.04B(6) shows clearly the proper pay items for different situations.

C. Removing Drainage Structures

Removal of existing drainage structures to be replaced within the construction limits of the new structure will not be paid for separately but will be included in the item of the new drainage structure.

13.05

OTHER COMMONLY USED MISCELLANEOUS ITEMS

13.05.01 (revised 4-20-2015)

Obliterating Roadway

Obliterating Roadway is completely eliminating old roads or temporary roads that are no longer needed. It shall apply only to those portions of the existing or temporary road outside the limits of the new roadway. The old road to be obliterated shall be graded to provide suitable drainage and produce an appearance of blending into the adjacent terrain. During The Plan Review, it should be discussed whether to bury the road surface or remove the road surface. When burying the road is not a viable option, the road surface should be set up for removal and paid for separately before obliteration begins. Ditches should be filled or graded to give a natural appearance. Old Structures should be broken down and buried or removed. The removal of large structures may be paid for separately. Obliterated areas shall be topsoiled, seeded, fertilized and mulched which will be measured and paid for separately. Obliteration may be accomplished by breaking the pavement surface to provide drainage and covering the roadway to a depth of at least 12 inches with suitable material.

13.05.02

Project Cleanup

"Project Cleanup" consists of cleaning up the project, including roadsides, prior to final acceptance. Project Cleanup provides for the removal of all debris, including old fences, fallen timber, logs and rubbish, within the right-of-way up to 50' beyond the grading limits. This work also includes the clean out of all culverts, sewers, and drainage structures that contain sediments from the contractors operations.

Project Cleanup should be included as a pay item on most projects.

13.05.03 (revised 4-20-2015)

Field Offices and Laboratories

Field Offices and Laboratories are needed on some projects for making field tests and housing office activities. Usually, facilities are available to the Department and the Contractor is not required to furnish a separate field office. The designer should place a note on The Plan Review prints asking if a field office is required.

13.05.04 (revised 8-19-2013)

Transporting Salvaged MDOT Material

Salvaged MDOT material, specifically signs and sign supports, are removed, transported and stockpiled during construction. The storage location for these items on all projects will be the MDOT Overhead Sign Shop in Lansing. Federal participation in the cost of this work is limited to a five mile haul distance. Therefore the pay item should always be considered 100% state funded. The designer should specify the storage location by note. See Traffic Signing General Notes.

13.05.05

Mobilization

Mobilization is to reimburse the contractor for initial costs incurred prior to starting work on the project. This consists of preparatory work and operations for the movement of personnel, equipment, supplies, and incidentals to the project site; for the establishment of the contractor's offices, buildings, and other facilities necessary to undertake the work on the project. It also includes other work and operations that must be performed, or for expenses incurred, prior to beginning work on the various contract items on the project site. This item applies to all projects.

13.05.06

Escalator Clauses - Fuel, Asphalt, Cement, and Steel

When Management determines material price inflation is a concern, it is sometimes desirable for the Department to let contracts with escalator clauses. These escalators allow for adjustments in prices of basic materials that may inflate during the life of the contract. This allows contractors to bid certain items to allow for inflation during the life of the contract.

When management determines that an escalator clause will be used, a special provision will be required setting forth the terms and methods of determining applicable price adjustments.

14.24 (revised 3-26-2012)

REQUEST FOR CRASH ANALYSIS AND SAFETY REVIEW
(PPMS Task Description 3560)

All projects, except non-hot mix asphalt overlay Capital Preventive Maintenance projects, should have a crash analysis and safety review by the Safety Programs Unit in the Design Division. The request for analysis is done by submitting Crash Analysis and Safety Review form. The review may have already been completed as part of the Region/TSC's Call-for-Projects process, in which case an additional review may not be necessary. However, reviews older than two years should be updated by requesting another review. The review will identify any unusual occurrences or above average frequency crashes and will advise the Design Unit of any recommended measures to alleviate the situation. The Project Manager should review the plans to verify these measures have indeed been incorporated into the plans prior to the OEC Meeting.

14.25 (revised 4-20-2015)

REQUEST FOR SPECIAL SOILS INVESTIGATIONS AND / OR DESIGNS
(PPMS Task Description 3510)

Although the Region/TSC Soils and Materials Engineer is responsible for supplying soil borings, pavement cores and limits and quantities for removal of unstable materials (peat, muck, etc.), to the Design Unit, other types of soil analysis may also be necessary. Any soil information, analysis and design regarding the following should be requested from the Geotechnical Services Unit of the Construction Field Services Division.

- Sewers and culverts greater than 5'-0"
- Box culverts greater than 4'-0" x 4'-0"
- Retaining walls
- Sound walls (except Metro Region)
- Light Towers (except Metro Region)
- Mechanically stabilized earth walls
- Reinforced soil slopes
- Pipe and culvert trenchless installations

In order to request any of the above, the Project Manager should send a memo and 2 sets of plans with the following minimum information:

- Plan of site (location map)
- Alignment with stationing
- Benchmarks as close to the location as possible
- A detailed description of the requested information
- Plan completion date and a date when the information is needed.
- Proposed method of controlling water (during culvert construction)-diversion channel, temporary dam, pump across road, etc.