Road & Bridge Design Publications

Monthly Update – August 2015

Revisions for the month of **August** are listed and displayed below. New special details will be included in projects submitted for the **November** letting as is stated on the special detail index sheets. E-mail questions related to the road changes or Scoping Manual to MDOT-Road-Design-Standards@michigan.gov. E-mail Bridge related questions to MDOT-Bridge-Design-Standards@michigan.gov.

Special Details

R-1-G: Drainage Structures: Revised a note in the note section to allow the holes in a riser to be formed by scribing.

Bridge Design Manual

7.02.08 B (LFD&LRFD) & 7.02.19 A4 (LFD& LRFD): Updated criteria for deck slab thickness used in composite designs and decks/slabs only.

Scoping Manual

Chapter 6: FAA Obstruction Evaluation: This is a new section discussing the federal regulation which requires the FAA be notified when construction, alteration, or activity is planned in a zone that may impact aircraft flight operations.

Updates to MDOT Cell Library, Bridge Auto Draw Program, etc., may be required in tandem with some of this month's updates. Until such updates to automated tools can be made, it is the designer's/detailer's responsibility to manually incorporate any necessary revisions to notes and plan details to reflect these revisions.

Index to Special Details

8-17-2015

⑥

SPECIAL DETAIL NUMBER	NUMBER OF SHEETS	TITLE	CURRENT DATE
21	2	GUARDRAIL AT INTERSECTIONS	5-24-01
24	5	GUARDRAIL ANCHORED IN BACK SLOPE TYPES 4B & 4T	7-22-02
99	2	CHAIN LINK FENCE WITH WIRE ROPE	9-22-14
*R-1-G	9	DRAINAGE STRUCTURES	7-28-15
R-62-H	5	GUARDRAIL APPROACH TERMINAL TYPES 2B & 2T (SKT)	10-28-14
R-126-I	5	PLACEMENT OF TEMPORARY BARRIER	3-26-12

*** Denotes New or Revised Special Detail to be included in projects for (beginning with) the November letting.**

Note: Former Standard Plans IV-87, IV-89, IV-90, and IV-91 Series, used for building cast-in-place concrete head walls for elliptical and circular pipe culverts, are now being replaced with plans that detail each specific size. The Municipal Utilities Unit will provide these full sized special details for inclusion in construction plans for MDOT jobs. To assure prompt delivery, requests ***must*** be made in advance.

Former Standard Plans IV-93 and IV-94 series have been replaced with precast concrete box & three-sided culverts as per the 2012 Standard Specifications for Construction.

Index to Bridge Detail Sheets

8-17-2015

⑦

DETAIL NUMBER	NUMBER OF SHEETS	TITLE	CURRENT DATE
EJ3AA	1 or 2	EXPANSION JOINT DETAILS	6-16-14
EJ4N	1 or 2	EXPANSION JOINT DETAILS	6-16-14
PC-2G	1	70" PRESTRESSED CONCRETE I-BEAM DETAILS	3-31-06
PC-4E	1	PRESTRESSED CONCRETE 1800 BEAM DETAILS	3-31-06
PC-1L	1	PRESTRESSED CONCRETE I-BEAM DETAILS	7-12-06

*** Denotes New or Revised Special Detail to be included in projects for (beginning with) the November letting.**

Note: Details EJ3AA & EJ4N are interactive, i.e. designers and detailers choose details based upon railing type and angle of crossing. Place all details appropriate for the project, structure specific information, and the Expansion Joint Device quantity on the sheet. The sheet shall then be added to the plans as a normal plan sheet.

Detail PC-1L, PC-2G and PC-4E shall have structure specific information and quantities added to the sheet. The sheet shall then be added to the plans as a normal plan sheet.

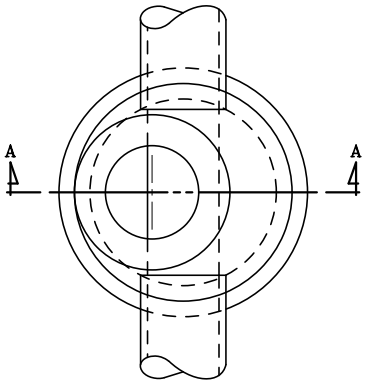

PLAN VIEW

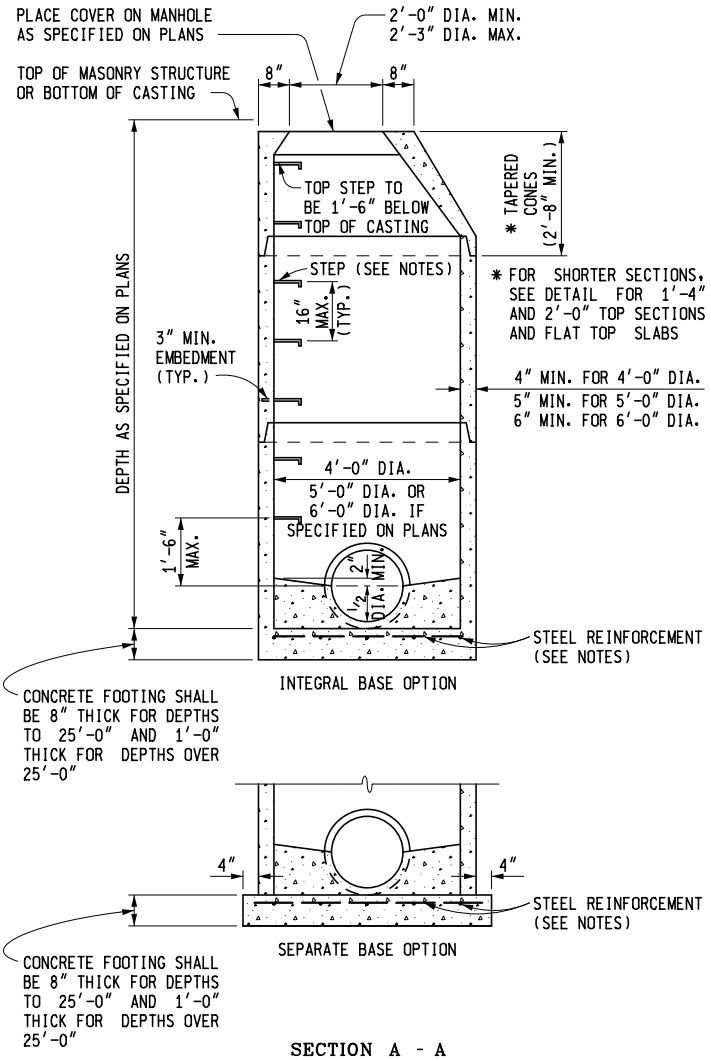

SECTION A - A

TYPICAL MANHOLE

PRECAST REINFORCED CONCRETE SHOWN
OTHER OPTIONS INCLUDE CONCRETE BLOCK, BRICK, OR CAST-IN-PLACE WALL SECTIONS
SEE TYPICAL WALL SECTIONS FOR WALL THICKNESS

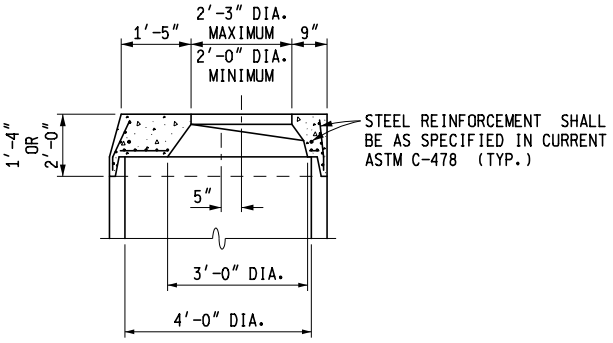

DETAIL FOR 1'-4" & 2'-0" TOP SECTIONS

SHAPE MAY VARY FROM DETAIL SHOWN BUT MUST COMPLY WITH ASTM C-478 AND JOINTS SHALL BE COMPATIBLE WITH THE RISER

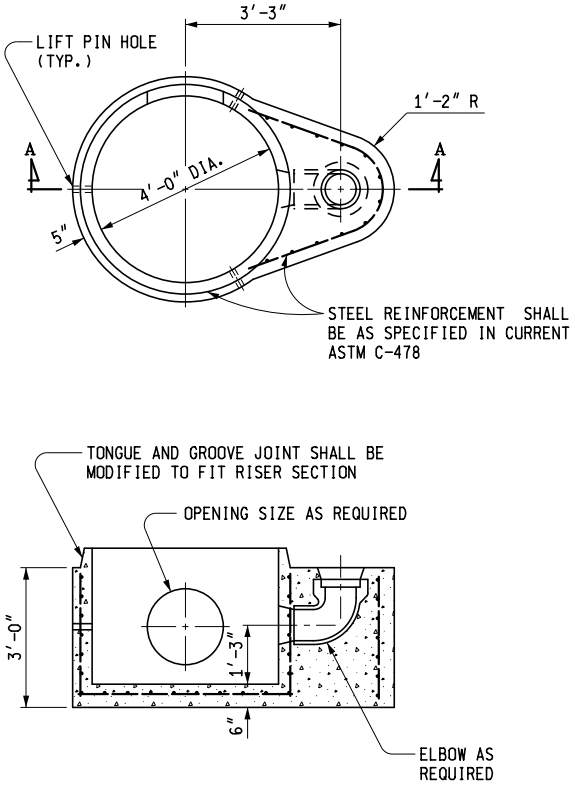

SECTION A - A

TYPICAL PRECAST REINFORCED BOTTOM SECTION FOR DROP MANHOLE

MDOT Michigan Department of Transportation

PREPARED BY DESIGN DIVISION

DRAWN BY: B.L.T.

CHECKED BY: W.K.P.

DEPARTMENT DIRECTOR
Kirk T. Steudle

APPROVED BY: _____
DIRECTOR, BUREAU OF FIELD SERVICES

APPROVED BY: _____
DIRECTOR, BUREAU OF DEVELOPMENT

MICHIGAN DEPARTMENT OF TRANSPORTATION
BUREAU OF DEVELOPMENT STANDARD PLAN FOR

DRAINAGE STRUCTURES

F.H.W.A. APPROVAL	7-28-2015 PLAN DATE	R-1-G	SHEET 1 OF 9

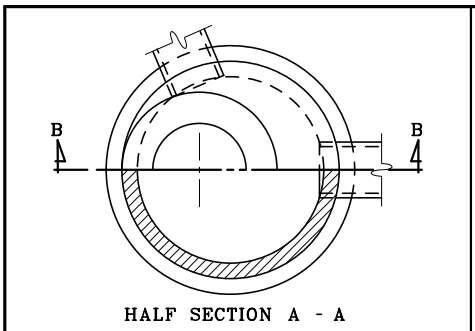

SEE MANHOLE DETAILS FOR SIZE AND BASE OPTIONS

SECTION B - B

INLET

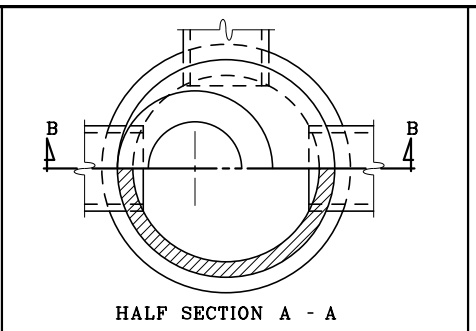

SEE MANHOLE DETAILS FOR SIZE AND BASE OPTIONS

SECTION B - B

CATCH BASIN

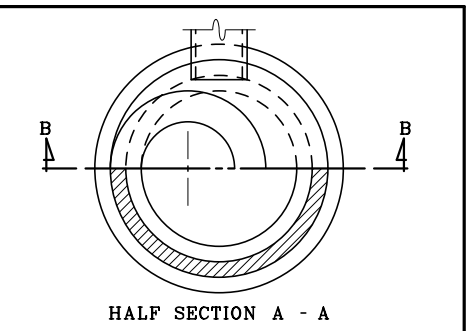

SEE MANHOLE DETAILS FOR BASE OPTIONS

SECTION B - B

LEACHING BASIN

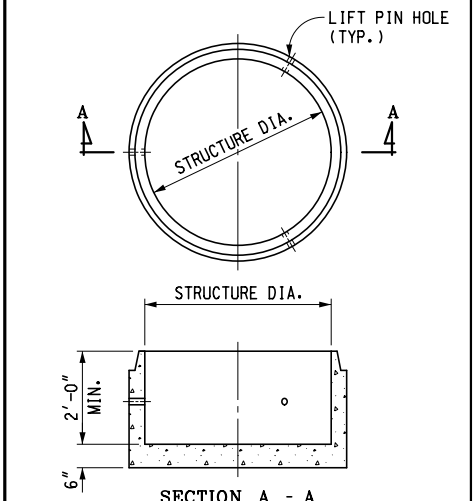

SECTION A - A

SEE MANHOLE DETAILS FOR SIZE AND BASE OPTIONS

PRECAST SUMP FOR PRECAST RISERS

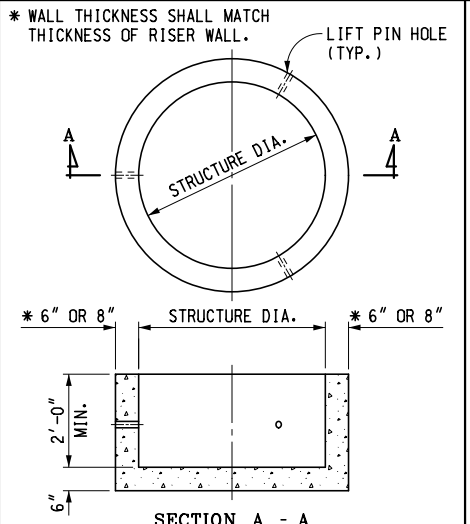

SECTION A - A

SEE TYPICAL BRICK AND BLOCK SECTION FOR SIZE AND BASE OPTIONS

PRECAST SUMP FOR BRICK OR BLOCK CONSTRUCTION

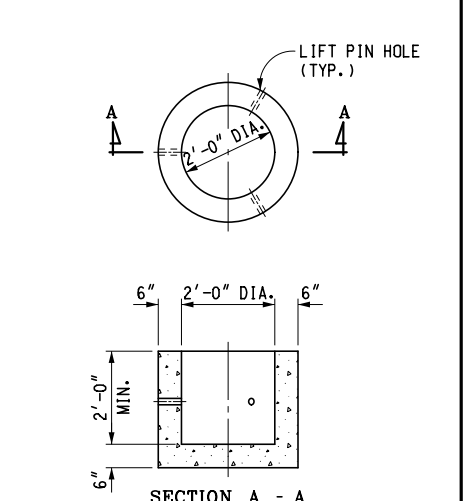

SECTION A - A

PRECAST SUMP FOR 2'-0" DIA. STRUCTURES

MICHIGAN DEPARTMENT OF TRANSPORTATION

BUREAU OF DEVELOPMENT STANDARD PLAN FOR

DRAINAGE STRUCTURES

F.H.W.A. APPROVAL	7-28-2015 PLAN DATE	R-1-G	SHEET 2 OF 9

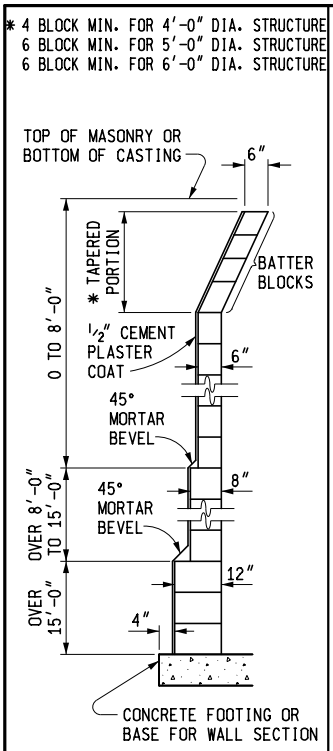

TYPICAL CONCRETE BLOCK WALL SECTION

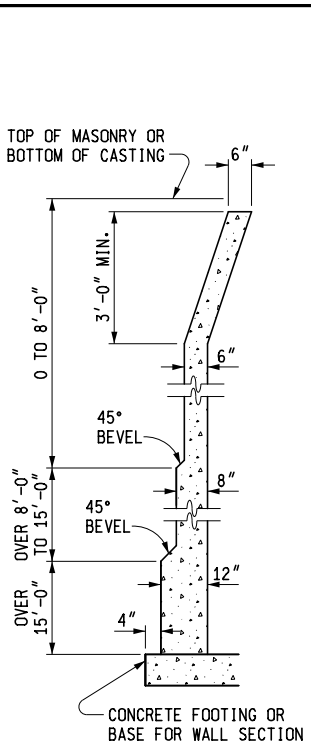

TYPICAL CAST-IN-PLACE CONCRETE WALL SECTION

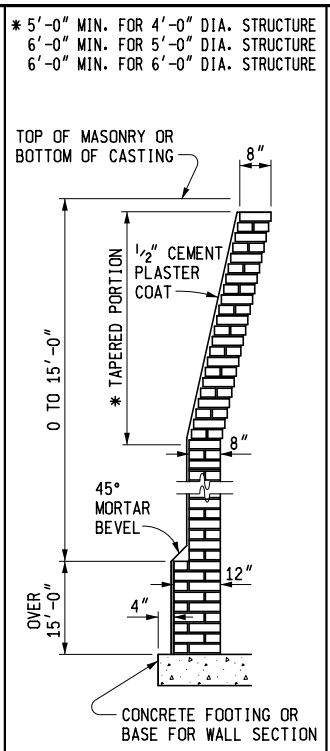

TYPICAL BRICK WALL SECTION

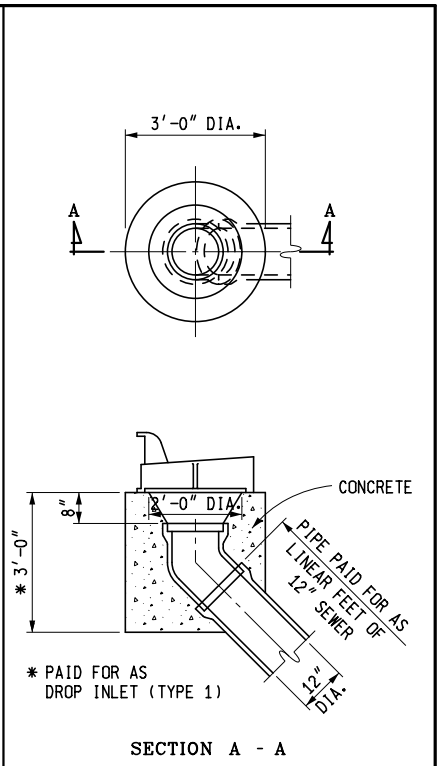

DROP INLET (TYPE 1)

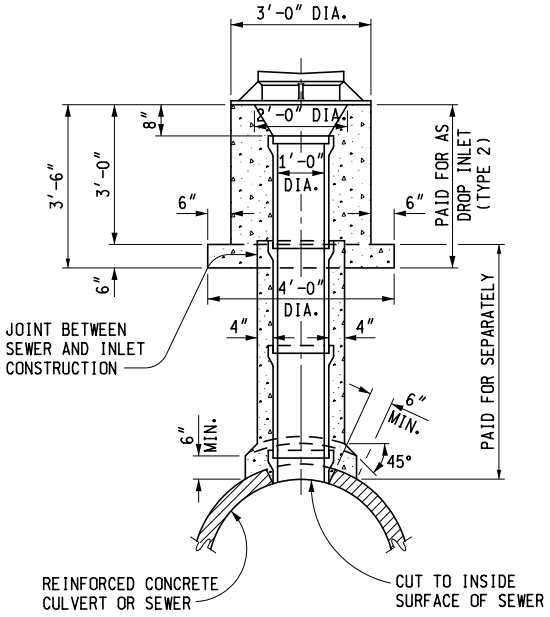

BACKFILL SHALL BE PLACED TO BOTTOM OF INLET AND COMPACTED BEFORE CONSTRUCTING THE INLET

DROP INLET (TYPE 2)

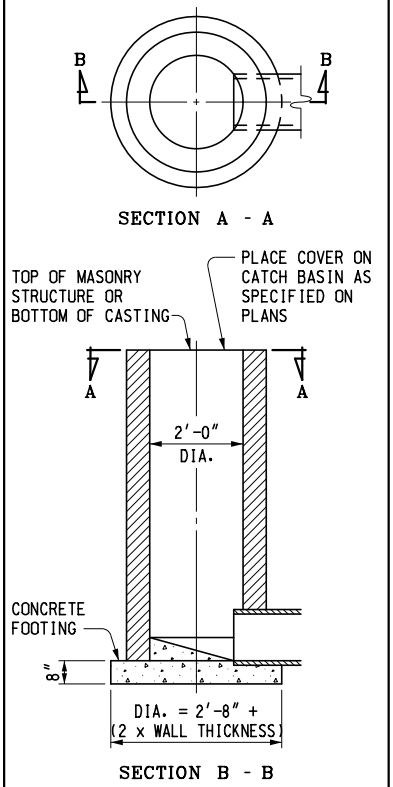

INLET

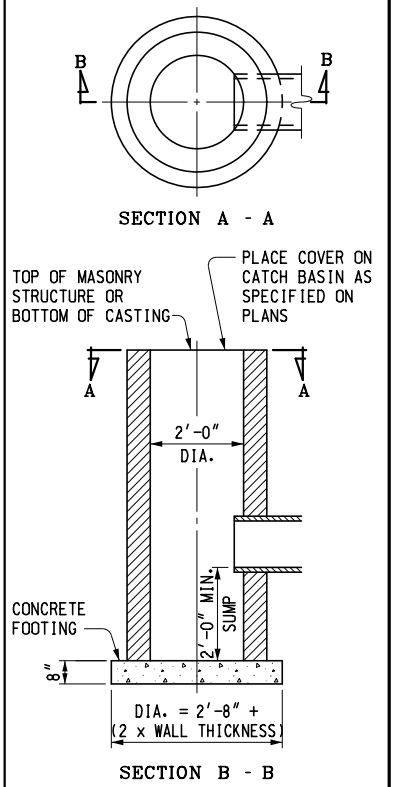

CATCH BASIN

MICHIGAN DEPARTMENT OF TRANSPORTATION
BUREAU OF DEVELOPMENT STANDARD PLAN FOR

DRAINAGE STRUCTURES

F.H.W.A. APPROVAL	7-28-2015 PLAN DATE	R-1-G	SHEET 3 OF 9

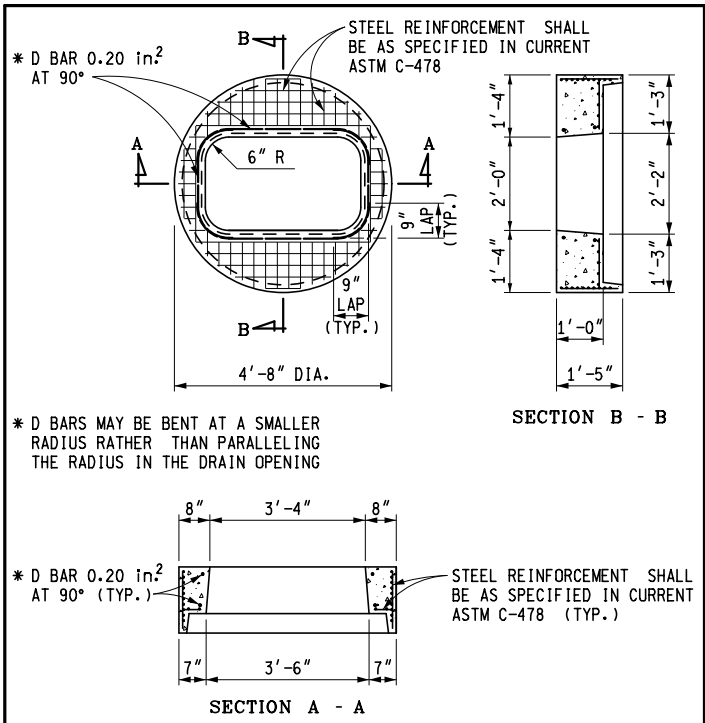

PRECAST FLAT SLAB TOP FOR PRECAST CONCRETE STRUCTURE, 2' x 4' CASTING

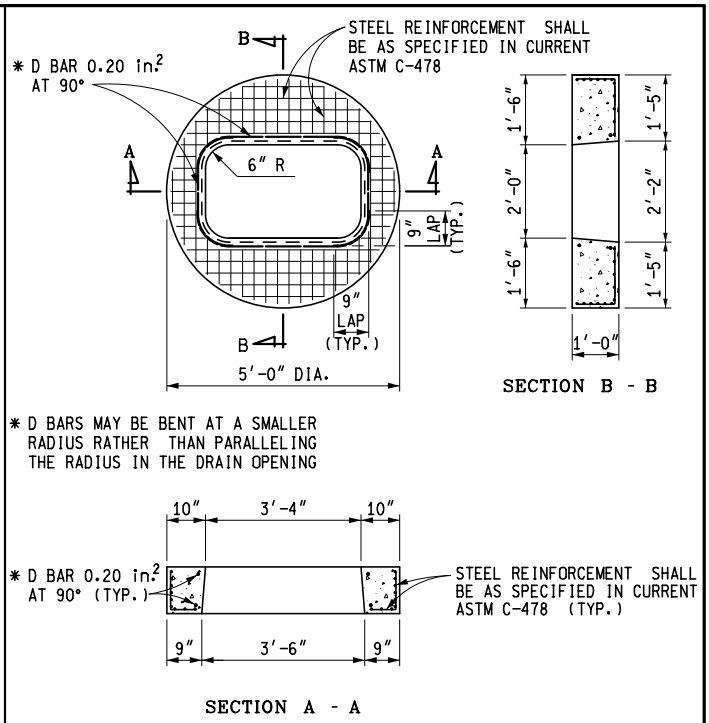

PRECAST FLAT SLAB TOP FOR MASONRY STRUCTURE, 2' x 4' CASTING

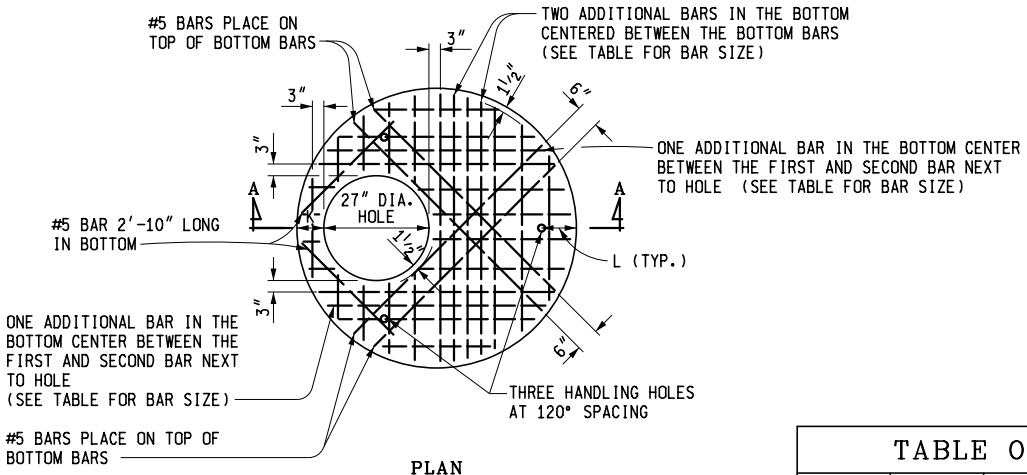

PLAN
(SHOWING BOTTOM LAYER OF REINFORCEMENT)

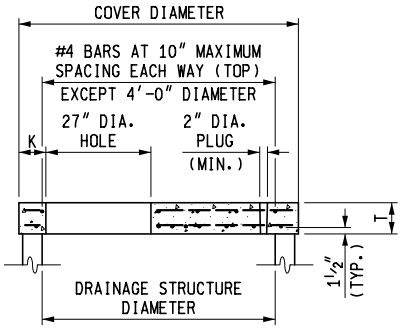

SECTION A - A

TABLE OF DIMENSIONS					
STRUCTURE DIAMETER	COVER DIAMETER	T	K	L	BAR MAXIMUM SPACING (BOTTOM EACH WAY)
* 4'-0"	58"	6"	6"	8"	#5 AT 6"
5'-0"	72"	8"	7"	9"	#5 AT 7"
6'-0"	86"	8"	8"	10"	#5 AT 6"
7'-0"	101½"	12"	8¾"	11"	#5 AT 5"
8'-0"	114"	12"	9"	11"	#6 AT 6"
9'-0"	128"	12"	10"	12"	#5 AT 6"
10'-0"	140"	12"	10"	13"	#5 AT 6"

* ONLY BOTTOM LAYERS OF STEEL NECESSARY

PRECAST REINFORCED CONCRETE FLAT SLAB TOP

MICHIGAN DEPARTMENT OF TRANSPORTATION
BUREAU OF DEVELOPMENT STANDARD PLAN FOR

DRAINAGE STRUCTURES

F.H.W.A. APPROVAL	7-28-2015 PLAN DATE	R-1-G	SHEET 4 OF 9

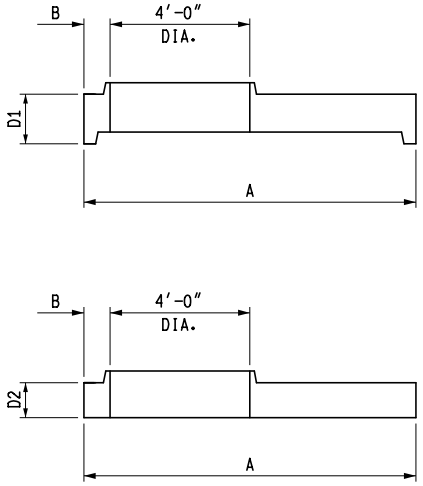

PRECAST REDUCER CAP

REDUCER CAP DIMENSIONS				
STRUCTURE DIAMETER	CAP DIAMETER "A"	B	CAP DEPTH "D1"	CAP DEPTH "D2"
7′-0″	101½″	8¾″	1′-5″	12″
8′-0″	114″	9″	1′-5″	12″
9′-0″	128″	10″	1′-5″	12″
10′-0″	140″	10″	1′-6″	12″

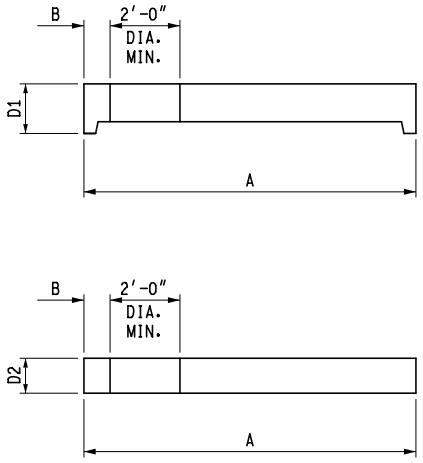

PRECAST FLAT SLAB TOP

FLAT SLAB TOP DIMENSIONS				
STRUCTURE DIAMETER	COVER DIAMETER "A"	B	COVER DEPTH "D1"	COVER DEPTH "D2"
7′-0″	101½″	8¾″	1′-5″	12″
8′-0″	114″	9″	1′-5″	12″
9′-0″	128″	10″	1′-5″	12″
10′-0″	140″	10″	1′-6″	12″

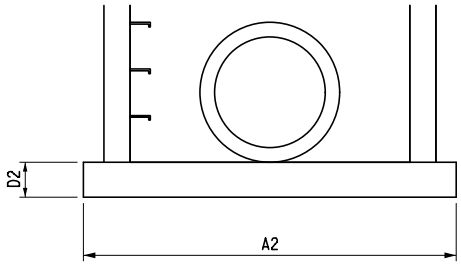

SEPARATE BASE OPTION

BASE AND RISER DIMENSIONS					
STRUCTURE DIAMETER	BASE DIAMETER "A1"	BASE DIAMETER "A2"	MIN. WALL THICKNESS "T"	BASE DEPTH "D1"	BASE DEPTH "D2"
7′-0″	101½″	108″	7″	8″	12″
8′-0″	114″	128″	8″	8″	12″
9′-0″	128″	140″	9″	8″	12″
10′-0″	140″	154″	10″	8″	12″

MICHIGAN DEPARTMENT OF TRANSPORTATION
BUREAU OF DEVELOPMENT STANDARD PLAN FOR

DRAINAGE STRUCTURES

F.H.W.A. APPROVAL	7-28-2015 PLAN DATE	R-1-G	SHEET 5 OF 9

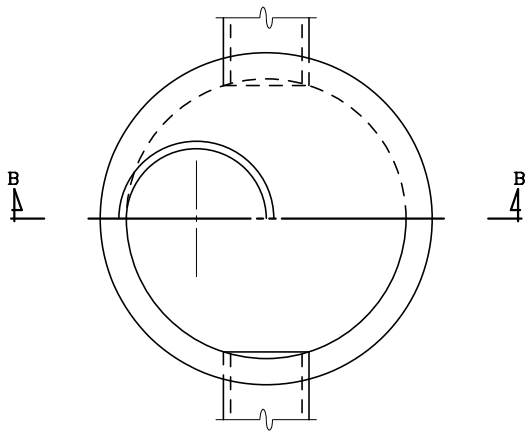

HALF SECTION A - A

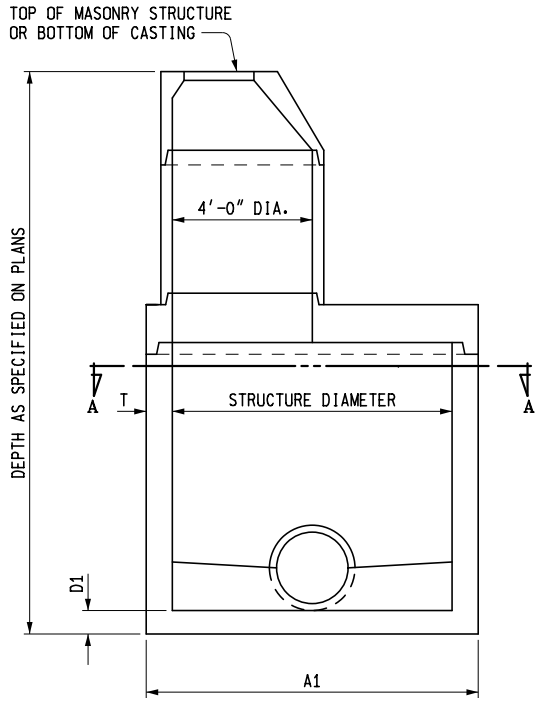

SECTION B - B
SHOWING REDUCER CAP

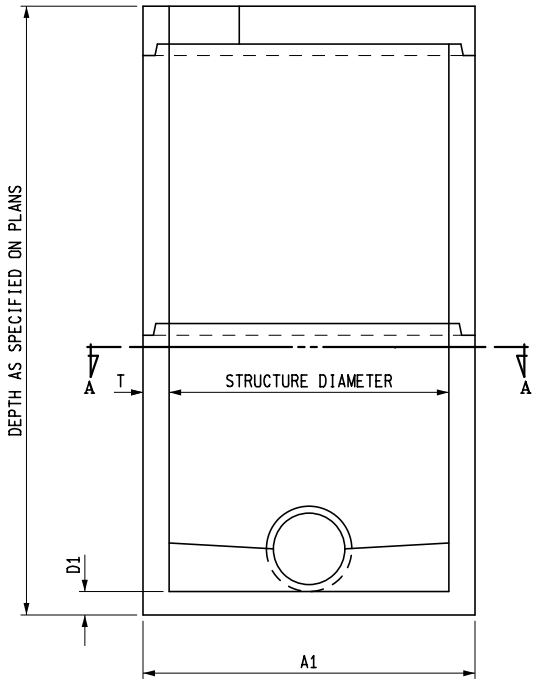

SECTION B - B
SHOWING FLAT SLAB TOP

PRECAST MANHOLE

MICHIGAN DEPARTMENT OF TRANSPORTATION
BUREAU OF DEVELOPMENT STANDARD PLAN FOR

DRAINAGE STRUCTURES

F.H.W.A. APPROVAL	7-28-2015 PLAN DATE	R-1-G	SHEET 6 OF 9

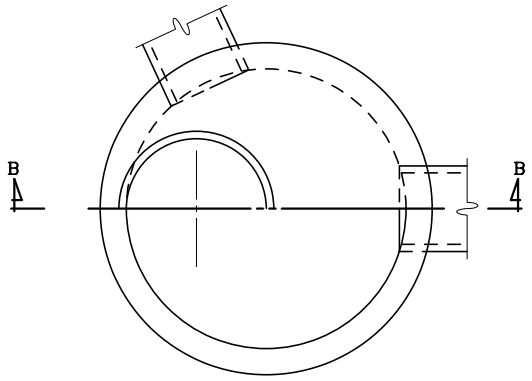

HALF SECTION A - A

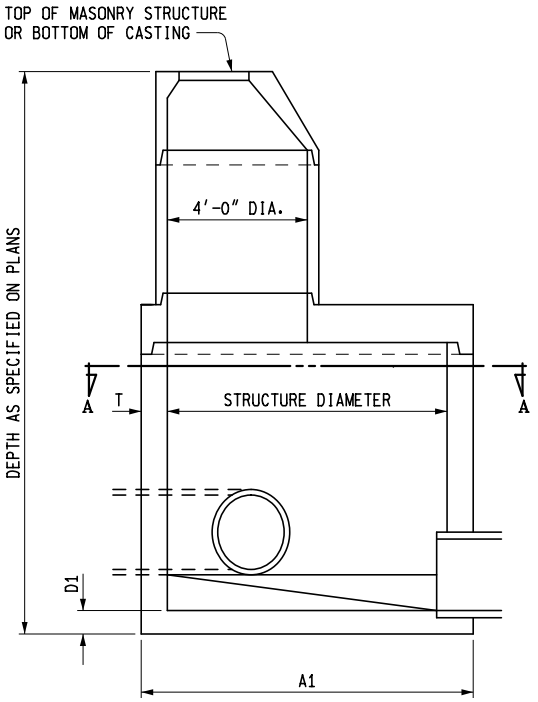

SECTION B - B
SHOWING REDUCER CAP

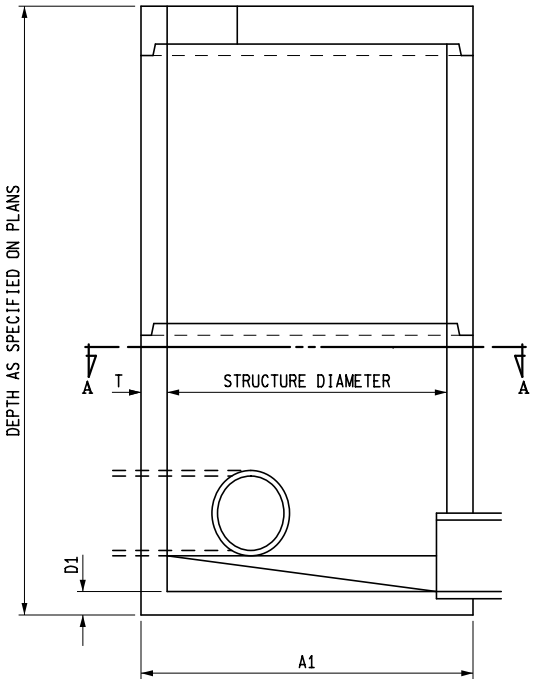

SECTION B - B
SHOWING FLAT SLAB TOP

PRECAST INLET

MICHIGAN DEPARTMENT OF TRANSPORTATION
BUREAU OF DEVELOPMENT STANDARD PLAN FOR

DRAINAGE STRUCTURES

F.H.W.A. APPROVAL	7-28-2015 PLAN DATE	R-1-G	SHEET 7 OF 9

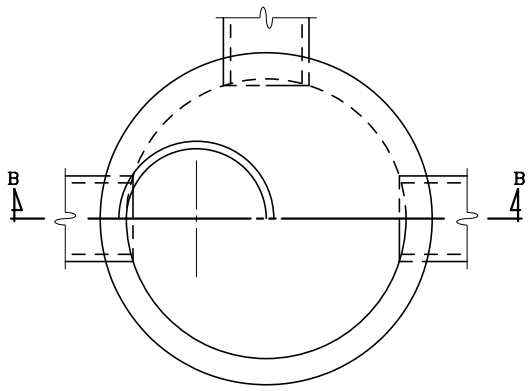

HALF SECTION A - A

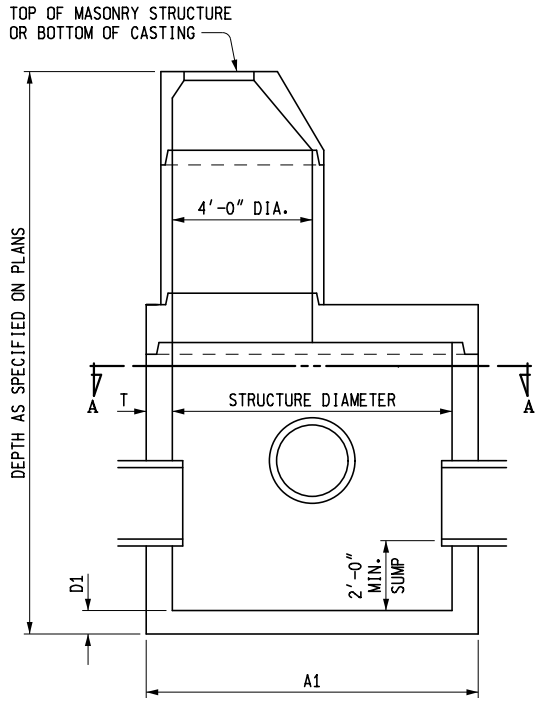

SECTION B - B
SHOWING REDUCER CAP

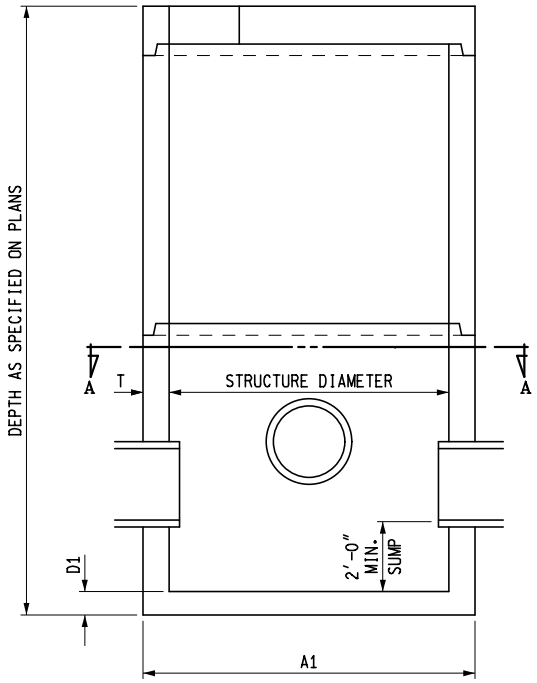

SECTION B - B
SHOWING FLAT SLAB TOP

PRECAST CATCH BASIN

MICHIGAN DEPARTMENT OF TRANSPORTATION
BUREAU OF DEVELOPMENT STANDARD PLAN FOR

DRAINAGE STRUCTURES

F.H.W.A. APPROVAL	7-28-2015 PLAN DATE	R-1-G	SHEET 8 OF 9

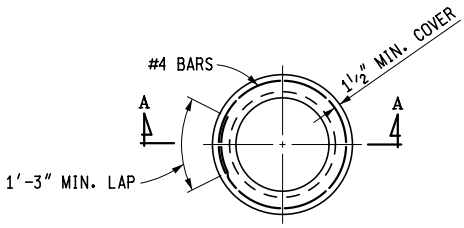

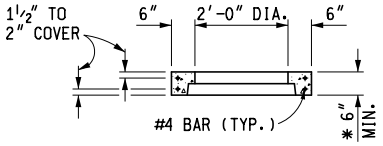

SECTION A - A

* WHEN RISER TONGUE LENGTH IS GREATER THAN 3", USE 2 TIMES THE TONGUE LENGTH.

NOTE: PRECAST RISER SHALL FULLY ENGAGE THE TONGUE OF THE RISER PIPE.

PRECAST RISER RING

(FOR 2'-0" DIAMETER STRUCTURE)

NOTES:

THE DRAINAGE STRUCTURE COVERS ALLOWED FOR USE ON THESE DRAINAGE STRUCTURES ARE SPECIFIED IN SUBSEQUENT STANDARD PLANS AND ARE INTERCHANGEABLE ON ANY STRUCTURE.

THE TOPS OF MASONRY STRUCTURES SHALL BE SUFFICIENTLY LOW TO PERMIT PROPER ADJUSTMENT OF COVER TO GRADE USING MORTAR OR BRICK AS DIRECTED BY THE ENGINEER.

PREMIUM JOINTS ARE REQUIRED ON ALL SANITARY MANHOLES. SEE ASTM DESIGNATION C-923.

GRANULAR MATERIAL CLASS III SHALL BE USED IN BACKFILLING AROUND ALL STRUCTURES THAT FALL WITHIN THE 1:1 INFLUENCE LINES FROM THE EDGE OF PAVEMENT OR BACK OF CURB.

STEPS FOR DRAINAGE STRUCTURES SHALL BE OF AN APPROVED DESIGN AND MADE FROM CAST IRON, ALUMINUM, OR PLASTIC COATED STEEL. RUNGS SHALL BE A MINIMUM OF 10" IN CLEAR LENGTH, DESIGNED TO PREVENT THE FOOT FROM SLIPPING OFF THE END. THE MINIMUM HORIZONTAL PULL OUT LOAD SHALL BE 400 LBS. THE MINIMUM VERTICAL LOAD SHALL BE 800 LBS.

THE BELL SHALL BE REMOVED FOR THE FIRST LENGTH OF OUTLET PIPE PROJECTING THROUGH THE WALL OF THE MANHOLE.

PRECAST CONCRETE SECTIONS, SUMPS, AND FLAT TOP SLABS SHALL BE BUILT ACCORDING TO CURRENT ASTM C-478 AND ACCORDING TO DETAILS SPECIFIED ON THIS PLAN. PRECAST REINFORCED CONCRETE FLAT TOP SLAB SHALL BE MARKED TO SHOW LOCATION OF REINFORCEMENT. THE WALLS OF THE PRECAST UNITS MAY HAVE A SLIGHT TAPER TO ALLOW FOR FORM REMOVAL. PRECAST CONCRETE 2'-0" DIAMETER DRAINAGE STRUCTURES SHALL HAVE A MINIMUM 3" WALL THICKNESS WITH A 6" MINIMUM BEARING SURFACE ON TOP. SEE PRECAST RISER RING FOR 2'-0" DIAMETER STRUCTURE.

THE INSIDE DIAMETER OF PIPES ENTERING OR LEAVING PRECAST DRAINAGE STRUCTURES SHALL BE LESS THAN THE INSIDE DIAMETER OF THE DRAINAGE STRUCTURE MINUS 2'-0". A PIPE LEAVING A 2'-0" DIAMETER DRAINAGE STRUCTURE IS ALLOWED TO HAVE 1'-0" INSIDE DIAMETER OR LESS.

THE NUMBER OF PIPE OPENINGS IN A RISER SHALL BE DETERMINED BY THE DESIGNER. SPACING BETWEEN OPENINGS SHALL BE 1'-0" MINIMUM. OPENINGS MAY BE CONSTRUCTED BY CASTING OR SCRIBING IN PRECAST STRUCTURES DURING FABRICATION OR BY CORING THE CURED CONCRETE.

PRECAST CONCRETE FOOTINGS OR BASES SHALL BE REINFORCED WITH #4 BARS SPACED AT 1'-0" BOTH WAYS OR WITH TWO LAYERS OF WELDED WIRE FABRIC OF EQUIVALENT CROSS SECTIONAL AREA LAID AT RIGHT ANGLES AND WIRED TOGETHER. REINFORCEMENT SHALL BE PLACED IN TOP OF FOOTING AND SHALL BE MARKED.

PRECAST CONCRETE FOOTINGS SHALL BE SUPPORTED BY A COMPACTED 6" GRANULAR SUBBASE.

THE MINIMUM WALL THICKNESS FOR ALL 2'-0", 4'-0", 5'-0", AND 6'-0" DRAINAGE STRUCTURES USING CONCRETE BLOCK, BRICK, OR CAST-IN-PLACE CONCRETE SHALL BE AS SPECIFIED IN TYPICAL WALL SECTIONS.

THE CONICAL SECTION OF MANHOLES OR CATCH BASINS CONSTRUCTED OF BLOCK OR BRICK SHALL BE SHROUDED WITH GEOTEXTILE FABRIC TO A MINIMUM DEPTH OF 5'-0" OR THROUGH THE FROST ZONE. ENOUGH GEOTEXTILE MATERIAL SHALL BE LEFT ON THE TOP (8" OR MORE) TO ROLL OVER THE TOP OF THE CONE.

PREFORMED HIGH DENSITY POLYSTYRENE FILLER PIECES MAY BE USED TO CHANNEL FLOW IN THE BOTTOM OF MANHOLES PROVIDED THEY HAVE AT LEAST 2" OF CONCRETE COVER. THE USE OF THIS MATERIAL FOR CHANNEL FLOW IS RESTRICTED TO MANHOLES WHERE THE BOTTOM SECTION IS NOT SUBJECT TO FREEZING. THE USE OF THIS MATERIAL MUST BE APPROVED BY THE ENGINEER.

MICHIGAN DEPARTMENT OF TRANSPORTATION
BUREAU OF DEVELOPMENT STANDARD PLAN FOR

DRAINAGE STRUCTURES

F.H.W.A. APPROVAL	7-28-2015 PLAN DATE	R-1-G	SHEET 9 OF 9

7.02.05

Bearings

A. Sole Plates

Plate thicknesses are to be specified in ¼" increments. For beveled sole plates, this ¼" increment is based on the maximum thickness.

For steel beams, sole plates are to be beveled when the calculated bevel is greater than 1% for curved steel bearings and greater than 0.5% for elastomeric bearings. For requirements for prestressed concrete beams, see Subsection 7.02.18. (8-6-92)

B. Elastomeric Pads

Elastomeric pads (⅛") are required under all steel masonry plates and are to be 1½" longer and wider than the masonry plates.
(10-24-2001)

C. Elastomeric Bearings

Plain bearings shall have a shear modulus, G, of 200 (30psi), laminated bearings shall have a shear modulus of 100 psi (15psi). Pads shall be 4" minimum (generally 6") by 34" with ¾" minimum thickness (increase in ¼" increments). (11-28-2011)

D. Anchor Bolts

Calculated lengths of bridge anchor bolts should be based on a bolt projection of 1" beyond the nut. (5-6-99)

7.02.06

Precamber - Steel Beams

Where dead load deflection, vertical curve offset, and deflection due to field welding (rare occurrence) is greater than ¼", the beams shall have a compensating camber. Camber is to be figured to the nearest ¼" and shall be parabolic.

In certain instances, such as for continuous spans or long cantilevers, reverse camber should be called for in order to obtain uniform haunch depths.

When several beams in a bridge have corresponding camber ordinates which differ only slightly from each other, the Engineer should attempt to average these into one set for all beams.

7.02.07

Moment of Inertia - Composite Beam

The composite moment of inertia shall be used throughout positive moment regions. This moment of inertia is to be used in negative moment regions to compute beam stiffness only.

7.02.08

Multiple Span Design

A. Beam Depth

Use the same depth beams for all spans with the longest span controlling the beam depth.

B. Composite Design

Composite design shall be used on all spans. Composite design uses the entire deck/slab thickness versus deck/slab stand-alone design which eliminates the top 1 ½" wearing surface. (5-6-99) (8-17-2015)

C. Suspended Spans

The suspended span should be poured first (see Section 7.02.01).

7.02.05

Bearings

A. Sole Plates

Plate thicknesses are to be specified in ¼" increments. For beveled sole plates, this ¼" increment is based on the maximum thickness.

For steel beams, sole plates are to be beveled when the calculated bevel is greater than 1% for curved steel bearings and greater than 0.5% for elastomeric bearings. For requirements for prestressed concrete beams, see Subsection 7.02.18. (8-6-92)

B. Elastomeric Pads

Elastomeric pads (⅛") are required under all steel masonry plates and are to be 1½" longer and wider than the masonry plates.
(10-24-2001)

C. Elastomeric Bearings

Plain bearings shall have a shear modulus, G, of 200 (30psi), laminated bearings shall have a shear modulus of 100 psi (15psi). Pads shall be 4" minimum (generally 6") by 34" with ¾" minimum thickness (increase in ¼" increments). (8-20-2009)

Design steel-reinforced elastomeric bearings with AASHTO LRFD Method A. Method B shall not be used unless approved by Structural Fabrication Engineer of the Operations Field Services Division.
(11-28-2011)

D. Anchor Bolts

Calculated lengths of bridge anchor bolts should be based on a bolt projection of 1" beyond the nut. (5-6-99)

7.02.06

Precamber - Steel Beams

Where dead load deflection, vertical curve offset, and deflection due to field welding (rare occurrence) is greater than ¼", the beams shall have a compensating camber. Camber is to be figured to the nearest ¼" and shall be parabolic.

In certain instances, such as for continuous spans or long cantilevers, reverse camber should be called for in order to obtain uniform haunch depths.

When several beams in a bridge have corresponding camber ordinates which differ only slightly from each other, the Engineer should attempt to average these into one set for all beams.

7.02.07

Moment of Inertia - Composite Beam

The composite moment of inertia shall be used throughout positive moment regions. This moment of inertia is to be used in negative moment regions to compute beam stiffness only.

7.02.08

Multiple Span Design

A. Beam Depth

Use the same depth beams for all spans with the longest span controlling the beam depth.

B. Composite Design

Composite design shall be used on all spans. Composite design uses the entire deck/slab thickness versus deck/slab stand-alone design which eliminates the top 1 ½" wearing surface. (5-6-99) (8-17-2015)

C. Suspended Spans
The suspended span should be poured first (see Section 7.02.01).

7.02.19

Slabs

For information on Ride Quality on new slabs see section 7.02.32

A. Design

Our standard slab (see Bridge Design Guide 6.41.01) is designed using the following criteria:

1. HS20-44 loading (16kip wheel).

2. Continuous over three or more beams of similar structural capacity.

3. Load Factor design method. (5-6-99)

4. For deck/slab design only, the top 1½" of slab is considered a wearing surface and is not included in the design depth, but is included in the dead load. See section 7.02.08 B. for composite action of deck slabs. (8-17-2015)

B. Overhang

For standard overhang, see various guides in Bridge Design Guides 6.29 Series.(1-14-2013)

Overhangs greater than standard should be avoided, if possible. If not, the slab design shall be checked in this region for negative movement.

7.02.19 (continued)

C. Slab Haunches

Plans are to provide for the deck slab to be haunched at each beam to provide for variance in actual top of beams. The design should normally make allowance for a 1" uniform haunch for steel beam bridges and a 2" minimum haunch for prestressed concrete beam bridges; however, the details should show the haunch as variable. A nominal 2" haunch should be used on structures with span lengths exceeding 100'-0". To aid in the construction of the haunched slab, the plans should include bottom of slab elevations over each beam and at equal intervals across the spans. These elevations should apply at the time that all structural steel has been erected, but no other loads applied; however, they should include allowance for additional deflection due to forms, steel reinforcement, deck concrete, and railing. For additional criteria when the haunch exceeds 6" see section 7.02.20 G. and Bridge Design Guide 6.42.03A. (5-6-99) (4-23-2012)

D. Slab Thicknesses

Slab thicknesses are to be according to Bridge Design Guide 6.41.01 and are to be uniform thickness with beams stepped to follow the crown of the roadway.

E. Slab Under Sidewalk

If the roadway slab extends underneath the sidewalk, it should be designed for full highway loading.

F. Nighttime Casting of Superstructure Concrete

All bridge deck pours are to be designated nighttime casting of superstructure concrete on all bridge decks. (5-6-99)

7.02.19

Slabs

For information on Ride Quality on new slabs see section 7.02.32

A. Design (8-20-2009)

MDOT standard LRFD slab is designed using the following criteria:

1. The design loads for decks and deck systems should be specified depending on the method of analysis. When the approximate strip method is used, force effects should be determined on the following basis:

   a. Where primary strips are transverse and their span does not exceed 15.0 ft., the transverse strip shall be designed for the wheels of the 32.0-kip axle.

   b. Where primary strips are transverse and their span exceeds 15.0 ft., the transverse strip shall be designed for the wheels of the 32.0-kip axle and the lane load together.

   c. Where primary strips are longitudinal, the transverse strips shall be designed for all loads specified above, including the lane load.

2. The design truck shall be positioned transversally such that the center of any wheel load is not closer than:

   a. One foot (1.0 ft.) from the face of the curb or railing for the design of the deck overhang.

   b. Two Feet (2.0 ft.) from the edge of the design lane for the design of all other components.

3. Where the strip method is used, the extreme positive moment in any deck panel between girders shall be taken to apply to all positive moment regions. The extreme negative moment over any girder shall be taken to apply to all negative moment regions.

7.02.19 (continued)

4. For deck/slab design only, the top 1½" of slab is considered a wearing surface and is not included in the design depth, but is included in the dead load. See section 7.02.08 B. for composite action of deck slabs. (8-17-2015)

Design of deck slabs using the Empirical Design Method according to A 9.7.2 AASHTO LRFD is an approved or allowed alternative.

B. Overhang

Design overhang according to A 9.7.1.5 AASHTO LRFD. If the deck overhang with cantilever does not exceed 6.0 ft. from the centerline of the exterior girder to the face of a structurally continuous concrete railing, the outside row of wheel loads may be replaced with a uniformly distributed line load of 1.0 klf intensity, located 1.0 ft. from the face of the railing. (8-20-2009)

For standard overhang, see various guides in Bridge Design Guides 6.29 Series.(1-14-2013)

Overhangs greater than standard should be avoided, if possible. If not, the slab design shall be checked in this region for negative movement.

Items that May Be Considered When Scoping Some Projects 6-32
Geometric Considerations 6-33
Right Of Way (ROW) Considerations 6-34
Floodplain, Stream and/or Wetland Mitigation 6-34
FAA Obstruction Evaluation 6-34
Life Cycle Cost Analysis 6-35
Value Engineering 6-35
Corridor Coordination 6-36
Template Coordination 6-37
Maintenance Coordination 6-37
Post Construction Reviews 6-37
Special Provisions Requirements 6-38
Heritage Routes 6-38
Access Management 6-38
Operations & Mobility-Current MI Transportation Plan Goals 6-39
Other Funding Sources 6-40
Safe Routes to School 6-41
Elderly Mobility 6-42
Rumble Strips 6-42
Maintenance Crossovers 6-43
Use of Consultants 6-44
Items that May Be Considered When Scoping Bridge Projects 6-44
Field Site Review 6-45
Determining Repair Options 6-50

Right Of Way Considerations

Determining the existing ROW

Right of Way (ROW) Map Books (updated ROW plansheets are on the MDOT website) should be reviewed to determine the existing ROW for the proposed project. In addition the Statewide ROW maps may be available in ProjectWise, under Reference Documents. Depending on the existing ROW width and the proposed fix, additional ROW may be required to construct the project. The ROW impacts and an estimate of cost for the projects should be included in the scope.

http://mdotcf.state.mi.us/public/ROWFiles/index.cfm

ROW impacts commonly include proposed ROW (to be purchased in fee or easement), grading permits, driveway permits, sidewalk permits and drainage easements. The Region Real Estate staff should be consulted with to estimate the cost of ROW needed for the scoping estimate. Additionally, ROW impacts can change the Environmental Classification of the project and should be identified early to maintain project schedule and budget.

Floodplain, Stream and/or Wetland Mitigation

Road widening in a floodplain or wetland

If a project will involve significant widening in floodplain and/or wetland locations, a review and analysis of the impacts needs to be done during the scoping process to determine if mitigation will be required. Mitigation can be done onsite, offsite at a newly determined location, or may be done at a preexisting wetland bank site. The cost of the mitigation will need to be included in the project scoping estimate. The Region Permit Coordinator and/or Lansing Environmental Section should be consulted with on this issue.

If a project will involve physical impact to a regulated watercourse, an Inland Lakes and Streams (Part 301) permit will be required. The cost for the permit requirements will need to be included in the project scoping budget. Steam Mitigation includes either a new stream enclosure (culvert) greater than 100 feet in length or stream relocation. For either of these items include 3% if construction cost < $1,000,000 or $100,000 if project cost > $1,000,000 for the permit requirements. The Region Permit Coordinator and/or Lansing Environmental Section should be consulted with on this issue.

FAA Obstruction Evaluation (section added 8-17-2015)

FAA notification of construction

Federal regulation (14 CFR Part 77.9) requires notification with the FAA (Federal Aviation Administration) when construction alteration or activity is planned in a zone that may impact aircraft flight operations. This may include change in grades, structure elevations, lighting, towers, crane heights, etc. A determination as to whether a notification is required can be made using a "Notice Criteria Tool" available on the FAA Obstruction Evaluation/Airspace Analysis web site. More information regarding this requirement is also available in section 14.17 of the Road Design Manual.