Road & Bridge Design Publications

Monthly Update – July 2016

Revisions for the month of **July** are listed and displayed below. New special details will be included in projects submitted for the **October** letting as is stated on the special detail index sheets. E-mail Scoping Manual & Road related questions on these changes to MDOT-Road-Design-Standards@michigan.gov. E-mail Bridge related questions to MDOT-Bridge-Design-Standards@michigan.gov.

Special Details

R-39-J: Transverse Pavement Joints: Revised the E3 joint (now a separate detail) by modifying the seal to a ½" depth of polyurethane or polyurethane hybrid joint sealing compound with a closed cell, polyethylene foam rod. Also eliminated an obsolete note in the note section in regards to neoprene joint seals.

Road Design Manual

3.11.03G: Guardrail & Concrete Barrier: Revised the last two sentences of the third paragraph to include the longer posts for the MGS guardrail system.

7.01.20: Guardrail Deflection: Revised the section to provide designers with "recommended minimum design offsets" instead of guardrail "deflections". Also, added lines in the guardrail deflection table for Type MGS and Type B (1'-6 ¾" post spacing) guardrail.

7.01.33A & 7.01.33B: Maintaining Guardrail Strength When One or More Posts Must Be Omitted: Revised the title of Standard Plan R-72-Series to match a recent revision.

7.01.33E: Maintaining Guardrail Strength When One or More Posts Must Be Omitted: In the last sentence, eliminated the title of section 7.01.41D, which was just revised.

7.01.41D: Guardrail Posts at or Near the Shoulder Hinge Line: Revised the section to include MGS guardrail (9' long posts).

Bridge Design Manual

7.02.24 B. 1. (LFD & LRFD) & 8.07.01 V. & Z. (LFD & LRFD): Updated to saw joints within 24 hours of placing the curing and fill to ¼" (½" for 1/3 of slab depth cuts) below top of concrete with polyurethane or polyurethane hybrid. Use in conjunction with Special Provision for Polyurethane Joint Sealant for Structures (available shortly).

Road & Bridge Design Publications

Monthly Update – July 2016

Bridge Design Guides

6.20.03A, 6.20.04, 6.60.11A & 6.60.11B: Updated to saw joints within 24 hours of placing the curing and fill to ¼" (½" for 1/3 of slab depth cuts) below top of concrete with polyurethane or polyurethane hybrid. Use in conjunction with Special Provision for Polyurethane Joint Sealant for Structures (available shortly).

Scoping Manual

Chapter 6, Items to Consider When Scoping a Project: In the Traffic Count section, placed a link to Form#1730 and removed the reference to the Appendix.

Chapter 7, Project Scoping and Package Requirements:

In the Utilities section, placed a link to Form#2483 and removed the reference to Appendix D.

In the Checklist for Constructability Review section, placed a link to Form#1961 and removed the reference to Appendix B.

In the Culvert Scope Inspection Form section, placed a link to Form#0592 and removed the reference to Appendix B.

In the Documentation of Decisions sections, placed a link to Form#0591 and removed the reference to Appendix D and obsolete Form 216.

Chapter 8, Cost Estimating: In the Utilities section, placed a link to Form#2483 and removed the reference to Appendix D. (pages 8-18 & 8-19)

Chapter 12, Best Practices: In the Documentation section, replaced a reference to Appendix D with a link to Form#0591 and removed a reference to obsolete Form 216. (page 12-3)

Updates to MDOT Cell Library, Bridge Auto Draw Program, etc., may be required in tandem with some of this month's updates. Until such updates to automated tools can be made, it is the designer's/detailer's responsibility to manually incorporate any necessary revisions to notes and plan details to reflect these revisions.

Index to Special Details

7-18-2016

⑥

SPECIAL DETAIL NUMBER	NUMBER OF SHEETS	TITLE	CURRENT DATE
21	2	GUARDRAIL AT INTERSECTIONS	3-14-16
24	8	GUARDRAIL ANCHORED IN BACKSLOPE TYPES 4B, 4T, & 4MGS-8	4-25-16
99	2	CHAIN LINK FENCE WITH WIRE ROPE	9-22-14
R-1-G	9	DRAINAGE STRUCTURES	6-15-16
R-28-J	7	SIDEWALK RAMP AND DETECTABLE WARNING DETAILS	3-15-16
*R-39-J	5	TRANSVERSE PAVEMENT JOINTS	7-13-16
R-53-A	22	TEMPORARY CONCRETE BARRIER LIMITED DEFLECTION	8-14-15
R-60-J	16	GUARDRAIL TYPES A, B, BD, T, TD, MGS-8, & MGS-8D	4-22-16
R-61-H	19	GUARDRAIL APPROACH TERMINAL TYPES 1B & 1T (SKT, FLEAT, & X-Lite)	6-6-16
R-62-H	10	GUARDRAIL APPROACH TERMINAL TYPES 2B & 2T (SKT & X-Lite)	3-15-16
R-63-C	16	GUARDRAIL APPROACH TERMINAL TYPES 3B & 3T	3-15-16
R-66-E	4	GUARDRAIL DEPARTING TERMINAL TYPES B, T, & MGS	4-27-16
R-67-G	7	GUARDRAIL ANCHORAGE, BRIDGE, DETAILS	3-15-16
R-72-D	11	W-BEAM BACKED GUARDRAIL & GUARDRAIL LONG SPAN INSTALLATIONS	5-11-16
R-73-F	6	GUARDRAIL OVER BOX OR SLAB CULVERTS	3-15-16
R-83-C	5	UTILITY TRENCHES	2-8-16
R-126-I	5	PLACEMENT OF TEMPORARY CONCRETE & STEEL BARRIER	8-25-15

*** Denotes New or Revised Special Detail to be included in projects for (beginning with) the October letting.**

Note: Former Standard Plans IV-87, IV-89, IV-90, and IV-91 Series, used for building cast-in-place concrete head walls for elliptical and circular pipe culverts, are now being replaced with plans that detail each specific size. The Municipal Utilities Unit will provide these full sized special details for inclusion in construction plans for MDOT jobs. To assure prompt delivery, requests ***must*** be made in advance.

Former Standard Plans IV-93 and IV-94 series have been replaced with precast concrete box & three-sided culverts as per the 2012 Standard Specifications for Construction.

Index to Bridge Detail Sheets

7-18-2016

⑦

DETAIL NUMBER	NUMBER OF SHEETS	TITLE	CURRENT DATE
B-22-E	4	BRIDGE RAILING, THRIE BEAM RETROFIT (R4 TYPE RAILING)	3-15-16
B-23-F	4	BRIDGE RAILING, THRIE BEAM RETROFIT (OPEN PARAPET RAILING)	3-15-16
B-101-G	2	DRAIN CASTING ASSEMBLEY DETAILS	2-8-16
EJ3AB	1 or 2	EXPANSION JOINT DETAILS	2-10-16
EJ4O	1 or 2	EXPANSION JOINT DETAILS	2-10-16
PC-2G	1	70" PRESTRESSED CONCRETE I-BEAM DETAILS	3-31-06
PC-4E	1	PRESTRESSED CONCRETE 1800 BEAM DETAILS	3-31-06
PC-1L	1	PRESTRESSED CONCRETE I-BEAM DETAILS	7-12-06

*** Denotes New or Revised Special Detail to be included in projects for (beginning with) the October letting.**

Note: Details EJ3AA & EJ4N are interactive, i.e. designers and detailers choose details based upon railing type and angle of crossing. Place all details appropriate for the project, structure specific information, and the Expansion Joint Device quantity on the sheet. The sheet shall then be added to the plans as a normal plan sheet.

Detail PC-1L, PC-2G and PC-4E shall have structure specific information and quantities added to the sheet. The sheet shall then be added to the plans as a normal plan sheet.

SYMBOL (Cp) AND (C3p)

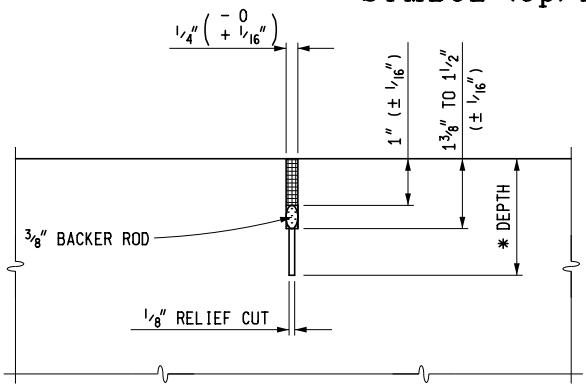

SYMBOL	LOAD TRANSFER	JOINT USE
(Cp)	YES	PAVEMENT
(C3p)	NO	SHOULDER

SAWED JOINT DETAIL

SAWED JOINT SEALED WITH LOW MODULUS HOT-POURED RUBBER-ASPHALT TYPE JOINT SEALING COMPOUND.

* DEPTH OF RELIEF CUT FOR JOINT (Cp) AND (C3p) SHALL BE 1/4 THE SLAB THICKNESS FOR PAVEMENTS LESS THAN OR EQUAL TO 7" IN THICKNESS AND 1/3 THE SLAB THICKNESS FOR PAVEMENTS GREATER THAN 7" THICK.

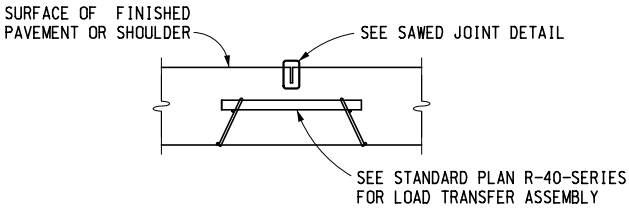

LOAD TRANSFER ASSEMBLY METHOD

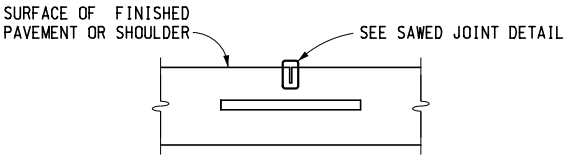

DOWEL BAR INSERTER METHOD

TRANSVERSE CONTRACTION JOINT

SYMBOL (W)

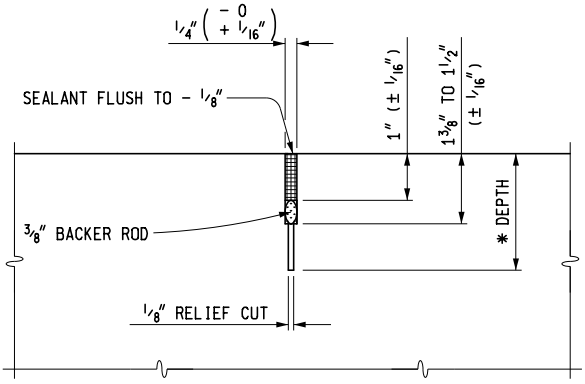

SAWED JOINT DETAIL

SAWED JOINT SEALED WITH LOW MODULUS HOT-POURED RUBBER-ASPHALT TYPE JOINT SEALING COMPOUND.

* DEPTH OF RELIEF CUT FOR JOINT 1/4 THE SLAB THICKNESS.

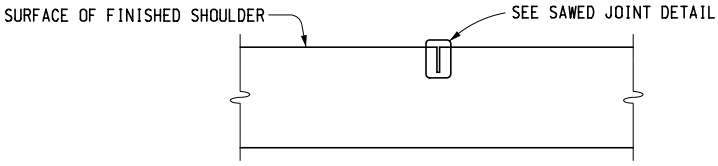

TRANSVERSE AND INTERSECTION PLANE OF WEAKNESS JOINTS

MDOT Michigan Department of Transportation	DEPARTMENT DIRECTOR Kirk T. Steudle	MICHIGAN DEPARTMENT OF TRANSPORTATION BUREAU OF DEVELOPMENT STANDARD PLAN FOR TRANSVERSE PAVEMENT JOINTS (PLAIN CONCRETE PAVEMENT)
PREPARED BY DESIGN DIVISION	APPROVED BY: ENGINEER OF DELIVERY	
DRAWN BY: B.L.T.	APPROVED BY: ENGINEER OF DEVELOPMENT	F.H.W.A. APPROVAL
CHECKED BY: W.K.P.		7-13-2016 PLAN DATE
		R-39-J
		SHEET 1 OF 5

SYMBOL (E2) AND (E4)

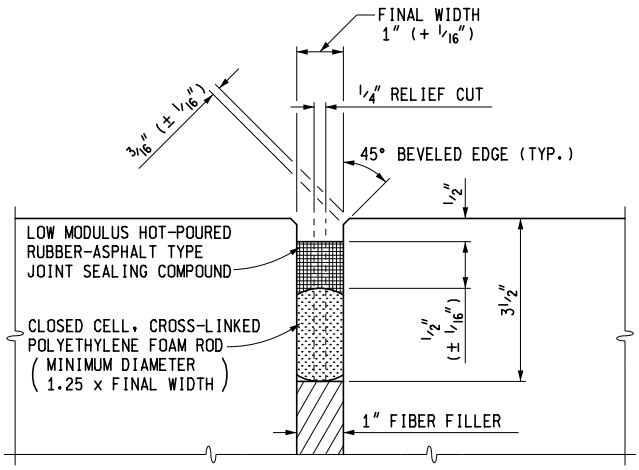

SAWED JOINT DETAIL

SAWED JOINT SEALED WITH LOW MODULUS HOT-POURED RUBBER-ASPHALT TYPE JOINT SEALING COMPOUND.

NOTE:

THE FINAL WIDTH OF THE GROOVE SHALL BE 1″ + 1/16″ PLUS ANY INCREASE OR MINUS ANY DECREASE IN THE WIDTH OF THE RELIEF CUT. THE FINAL SAW CUT SHALL BE TO THE TOP OF THE FIBER FILLER WITH A MINIMUM DEPTH AS SHOWN AND SHALL BE CENTERED OVER THE FIBER FILLER WITH A HORIZONTAL TOLERANCE OF 1/4″. FIBER FILLER FOR EXPANSION JOINTS IN CONCRETE SHOULDERS SHALL BE FREE OF HOLES OR OTHER DEFECTS AND TRIMMED TO FIT SHOULDER CONFIGURATIONS.

SYMBOL	LOAD TRANSFER ASSEMBLY	JOINT USE
(E2)	YES	PAVEMENT
(E4)	NO	SHOULDER

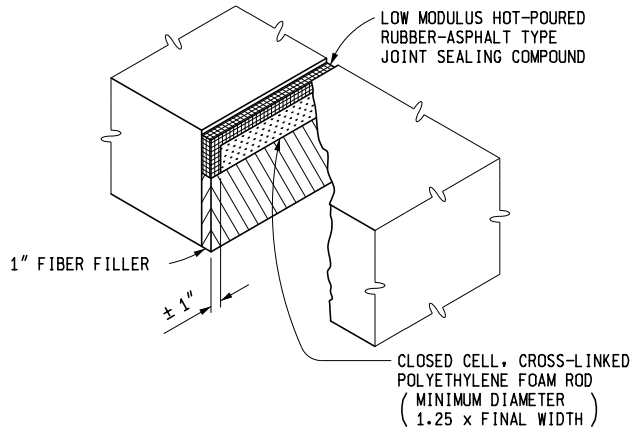

OUTSIDE EDGE TREATMENT

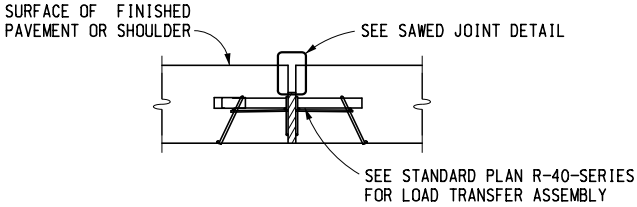

TRANSVERSE EXPANSION JOINT

SYMBOL (U)

1/8″ SAWED JOINT OR A FORMED JOINT MADE BY PLACING 1/4″ HARDBOARD OR OTHER APPROVED MATERIAL FLUSH WITH THE SURFACE OF THE CONCRETE BASE COURSE AND TRUE TO POSITION AND LINE BEFORE THE CONCRETE HAS SET

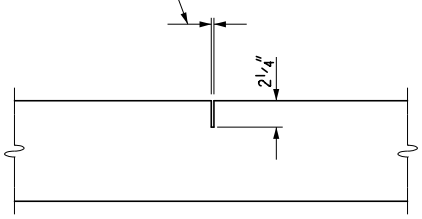

TRANSVERSE PLANE OF WEAKNESS JOINTS IN CONCRETE BASE COURSE

MICHIGAN DEPARTMENT OF TRANSPORTATION
BUREAU OF DEVELOPMENT STANDARD PLAN FOR

TRANSVERSE PAVEMENT JOINTS
(PLAIN CONCRETE PAVEMENT)

F.H.W.A. APPROVAL	7-13-2016 PLAN DATE	R-39-J	SHEET 2 OF 5

SYMBOL (E3)

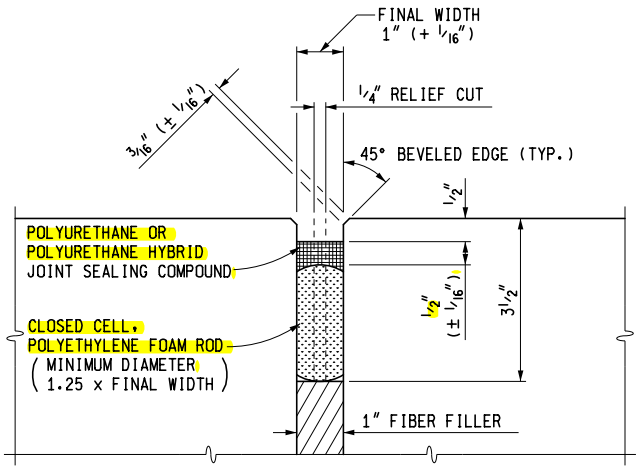

SAWED JOINT DETAIL

SAWED JOINT SEALED WITH POLYURETHANE OR POLYURETHANE HYBRID JOINT SEALING COMPOUND.

NOTE:

THE FINAL WIDTH OF THE GROOVE SHALL BE 1″ + 1/16″ PLUS ANY INCREASE OR MINUS ANY DECREASE IN THE WIDTH OF THE RELIEF CUT. THE FINAL SAW CUT SHALL BE TO THE TOP OF THE FIBER FILLER WITH A MINIMUM DEPTH AS SHOWN AND SHALL BE CENTERED OVER THE FIBER FILLER WITH A HORIZONTAL TOLERANCE OF 1/4″. FIBER FILLER FOR EXPANSION JOINTS IN CONCRETE SHOULDERS SHALL BE FREE OF HOLES OR OTHER DEFECTS AND TRIMMED TO FIT SHOULDER CONFIGURATIONS.

SYMBOL	LOAD TRANSFER ASSEMBLY	JOINT USE
(E3)	NO	PAVEMENT & SHOULDER

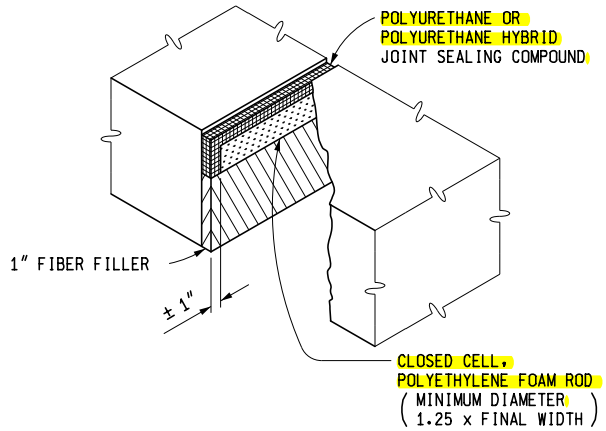

OUTSIDE EDGE TREATMENT

TRANSVERSE EXPANSION JOINT

MICHIGAN DEPARTMENT OF TRANSPORTATION
BUREAU OF DEVELOPMENT STANDARD PLAN FOR

TRANSVERSE PAVEMENT JOINTS
(PLAIN CONCRETE PAVEMENT)

F.H.W.A. APPROVAL	7-13-2016 PLAN DATE	R-39-J	SHEET 3 OF 5

SYMBOL (H)

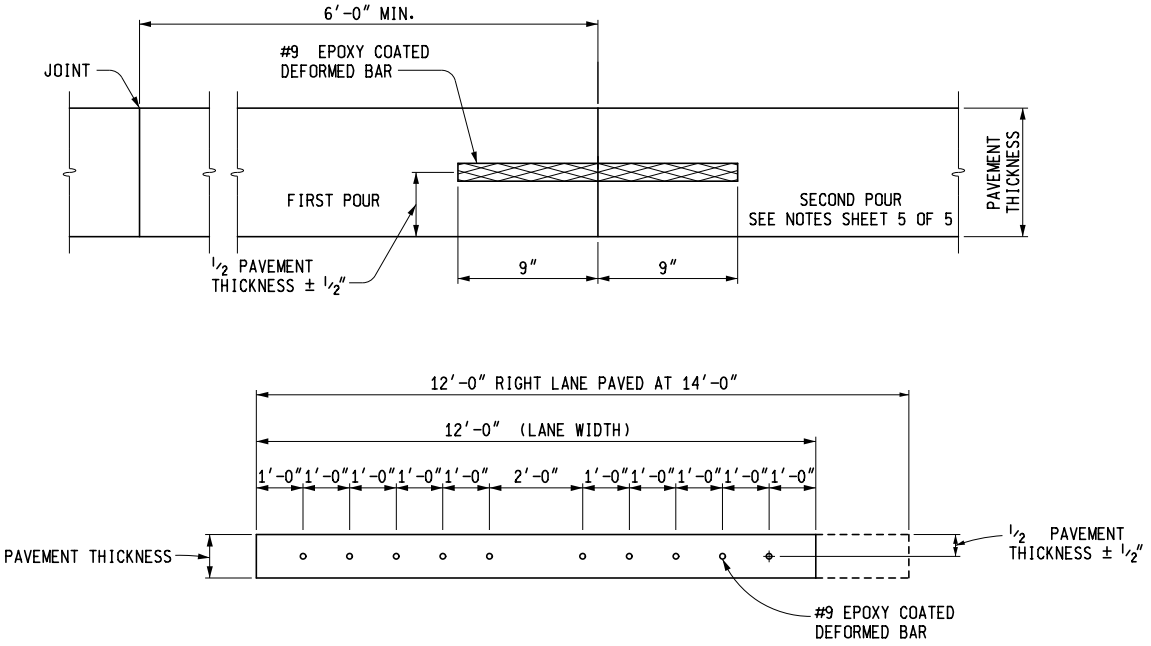

DEFORMED BAR SPACING

TRANSVERSE END OF POUR JOINT (SPLIT HEADER METHOD)

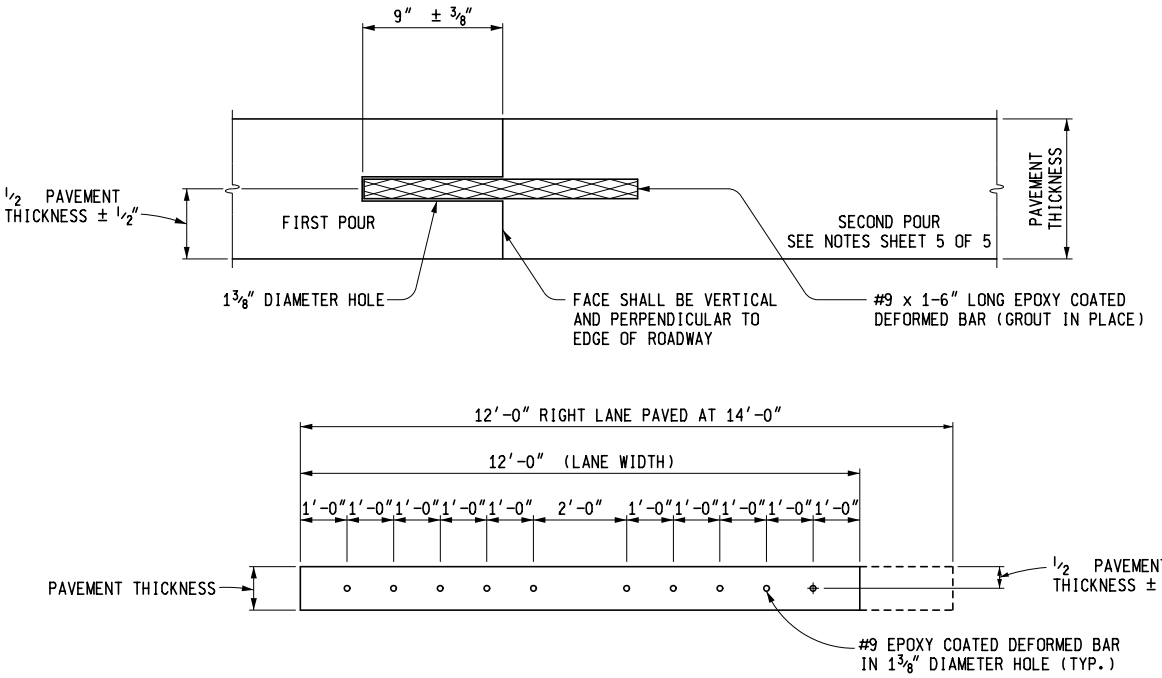

DEFORMED BAR SPACING

NOTE: THE HOLE SPACING MAY BE ADJUSTED 1" HORIZONTALLY, RAISED 1/2", OR LOWERED 1" FROM THE ABOVE LOCATIONS TO AVOID DRILLING INTO THE REINFORCEMENT.

TRANSVERSE END OF POUR JOINT (DRILLED IN METHOD)

MICHIGAN DEPARTMENT OF TRANSPORTATION
BUREAU OF DEVELOPMENT STANDARD PLAN FOR

TRANSVERSE PAVEMENT JOINTS
(PLAIN CONCRETE PAVEMENT)

F.H.W.A. APPROVAL	7-13-2016 PLAN DATE	R-39-J	SHEET 4 OF 5

SYMBOL (H)

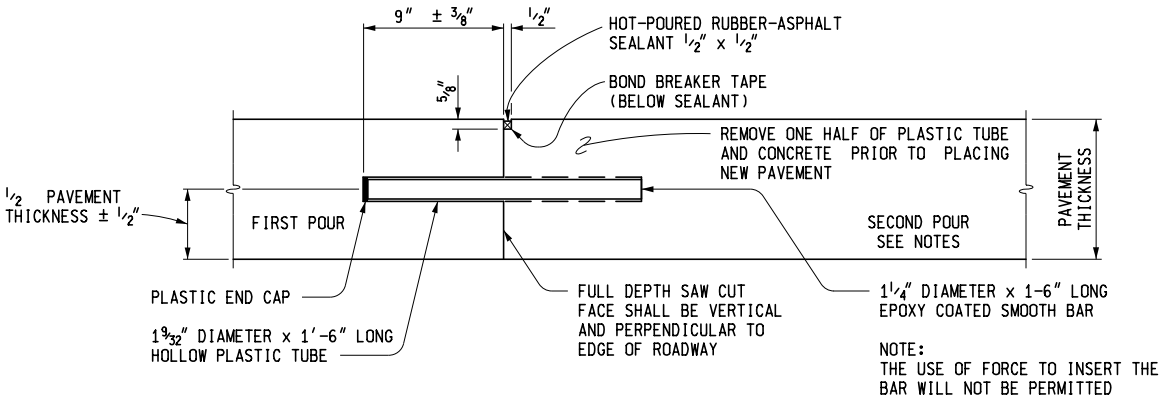

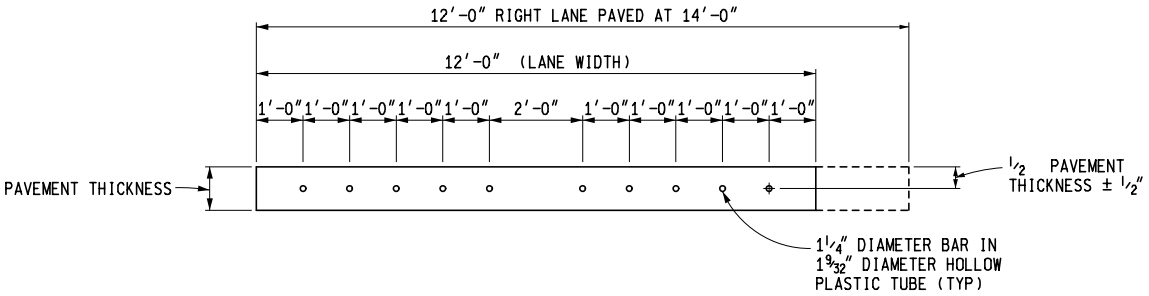

DEFORMED BAR SPACING

TRANSVERSE END OF POUR JOINT (PLASTIC TUBE METHOD)

NOTES:

LOAD TRANSFER ASSEMBLIES ARE DETAILED ON THE CURRENT STANDARD PLAN R-40-SERIES.

TRANSVERSE JOINTS SHALL BE SPACED ACCORDING TO THE CURRENT STANDARD PLAN R-43-SERIES.

A TRANSVERSE END OF POUR JOINT (DRILLED IN METHOD) SYMBOL (H), SHALL BE CONSTRUCTED WHEN IT IS ANTICIPATED THAT THE SECOND POUR WILL BE DELAYED 7 DAYS OR LONGER.

A TRANSVERSE END OF POUR JOINT (SPLIT HEADER METHOD) OR (PLASTIC TUBE METHOD) SHALL BE USED AT THE END OF THE DAY'S POUR OR WHEN THERE IS AN UNAVOIDABLE INTERRUPTION OF THE WORK FOR MORE THAN ONE-HALF HOUR AND LESS THAN 7 DAYS. THE JOINT SHALL BE CONSTRUCTED ACCORDING TO TRANSVERSE END OF POUR JOINT (SPLIT HEADER METHOD) OR (PLASTIC TUBE METHOD), SYMBOL (H).

THE EXPANSION JOINT MATERIAL IN THE SHOULDERS SHALL BE SUPPORTED BY ONE OF THE FOLLOWING METHODS:

1. A CONTINUOUS SUPPORT WIRE, AS SPECIFIED FOR EXPANSION LOAD TRANSFERS ASSEMBLIES, AS DETAILED ON STANDARD PLAN R-40-SERIES, SHALL BE USED ON EACH SIDE OF EXPANSION MATERIAL. THIS WIRE SHALL BE EQUIPPED WITH STAKES AND STAKE POCKETS TO RIGIDLY HOLD THE EXPANSION MATERIAL IN PLACE DURING CONCRETE PLACEMENT. STAKES SHALL BE AS SPECIFIED ON STANDARD PLAN R-40-SERIES, SPACED NOT MORE THAN 2′-0″ APART.

2. "U" OR "J" SHAPE STAPLES OF W8 WIRE (0.319″ NOMINAL DIAMETER) SHALL BE SPACED ON 2′-0″ CENTERS EACH SIDE OF THE EXPANSION MATERIAL. EACH VERTICAL LEG OF THE STAPLE SHALL BE AT LEAST 1′-3″ LONG.

3. OTHER EQUIVALENT METHODS MAY BE USED WHEN APPROVED BY THE ENGINEER.

JOINTS SHALL NOT BE SEALED IN CONCRETE BASE COURSE.

WHEN CONCRETE SHOULDERS ARE CAST SEPARATELY FROM MAINLINE CONCRETE PAVEMENT, A KEYWAY MAY BE USED TO FACILITATE THE PLACING OF LANE TIES. WHEN A KEYWAY GROOVE IS USED, IT SHALL BE CONTINUOUS AND UNIFORM.

THE LOCATION OF TRANSVERSE JOINTS IN CONCRETE SHOULDERS SHALL MATCH THE LOCATION OF ADJACENT TRANSVERSE PAVEMENT JOINTS. CORRESPONDING TRANSVERSE CONCRETE SHOULDER AND PAVEMENT JOINTS SHALL BE (C3p) SHOULDER WITH (Cp) PAVEMENT, (E4) SHOULDER WITH (E2) PAVEMENT, AND (E3) BEING THE SAME IN BOTH SHOULDER AND PAVEMENT.

DEFORMED BARS FOR TRANSVERSE END OF POUR JOINTS (DRILLED IN METHOD) SHALL BE GROUTED INTO EXISTING PAVEMENT WITH A GROUT SELECTED FROM THE PREQUALIFIED MATERIALS LISTED IN THE DEPARTMENT'S "MATERIALS SOURCE GUIDE" UNDER ADHESIVE SYSTEMS FOR GROUTING DOWEL BARS AND TIE BARS FOR FULL-DEPTH PAVEMENT REPAIRS.

MICHIGAN DEPARTMENT OF TRANSPORTATION
BUREAU OF DEVELOPMENT STANDARD PLAN FOR

TRANSVERSE PAVEMENT JOINTS
(PLAIN CONCRETE PAVEMENT)

F.H.W.A. APPROVAL	7-13-2016 PLAN DATE	R-39-J	SHEET 5 OF 5

3.11.03 (revised 7-18-2016)

Safety Considerations

A. Section Deleted

B. Ramp Geometrics and Taper Lengths

When existing acceleration lanes, deceleration lanes and tapers are shorter than those shown in current MDOT guides, they should be lengthened to conform with the latest Geometric Design Guides. If these distances cannot be achieved, design exceptions are required. Normally, it is more cost effective to use the parallel design for on and off ramps. The need for additional lanes on the off ramp terminals should be analyzed for capacity improvements. Radii should be checked for adequacy. Gore areas should be flattened where desirable.

C. Vertical Curbs

Vertical curb should be entirely removed on freeway mainlines, high speed turning roadways and collector distributor roads. It should also be removed on other ramps for a minimum distance of 200 feet from the bifurcation or ramp nose.

3.11.03 (continued)

D. Sight Distances

Vertical and horizontal sight distances along the mainline and within the entire interchange area, including ramp terminals, should be reviewed for conformance with current AASHTO guides. See MDOT Sight Distance Guidelines for more detailed discussion on sight distances.

E. Crown Location/Pavement Cross Slope

Where resurfacing is less than 4", the crown point will be retained in its existing location, but the 2.0% cross slope should be established or maintained.

Where resurfacing is 4" or more, the crown point should be moved to meet current standards by shifting it to the left edge of the outside lane. The 2.0% cross slope should be attained with the total yield kept close to 440 lbs/syd for 4", 550 lbs/syd for 5", etc. by reducing thickness on the median lane. However, this concept of relocating the crownline may not be feasible when the entire pavement is sloped in one direction. The desirable roll-over or algebraic difference between the pavement and shoulder cross slopes is six percent or less. A design exception is required when an existing parabolic crown is retained. Also, see Section 6.03.04B(1) “Crown and Superelevation Modification.”

F. Superelevation

Current Standard Plan R-107-Series should be used to upgrade rural freeway projects, when feasible. When it is not possible to use the current Standard Plan R-107-Series, the straight line method may be considered on a curve by curve basis as needed. See Superelevation Using A Straight Line Method in Section 3.04.03. A design exception is required if neither of these options can be met.

3.11.03 (continued)

Safety Considerations

G. Guardrail and Concrete Barrier

When designing barrier systems for rural freeways, use the 70 mph runout lengths from the runout chart in Section 7.01.19.

Piers and other obstacles near the center of medians, that are 70'-0" or less in width (edge to edge), will always be shielded from both sides, see Standard Plan R-56-Series. Obstacles in the median, near the edge of pavements, will be shielded from the near side. Shielding the far side will be determined on a project-by-project basis.

When it is not possible to maintain current guardrail offsets and still retain the 2'-0" distance from shoulder hinge line to the front face of guardrail post, it is generally more desirable to provide the additional offset between the guardrail and pavement edge than it is to reduce the offset in order to maintain the 2'-0" distance. The shoulder width can be maximized by using longer posts and relocating the guardrail to the shoulder hinge line. See Section 7.01.41D.

When entire runs of guardrail are replaced, the types of rails for upgrading freeways are the same as those specified in Section 7.01.12F for new freeways. The term "freeway" includes ramps. However, Type T guardrail on ramps should be transitioned to Type B when near a ramp terminal to avoid obstructing sight distance. See Section 7.01.41A.

3.11.03G (continued)

The need for median barrier will be reviewed with the Geometric Design Unit.

The elimination of guardrail should be considered when economically feasible to flatten slopes, or where fixed objects can be removed or relocated outside the clear zone.

H. Attenuation

Where physical conditions prohibit the use of barriers, but shielding is needed, attenuation devices should be used. Contact the Geometric Design Unit for attenuation design.

I. Shoulder Cross Slopes

See Section 6.05.05.

J. Section Deleted

Underclearance information in this section was moved to Section 3.12.

CHAPTER 7 APPURTENANCES INDEX (continued)

7.01.34 Guardrail in Conjunction with Curb

7.01.40 Guardrail Posts for Roadside Control

7.01.41 Upgrading and Replacement of Guardrail
- A. Guidelines for Upgrading or Replacing Guardrail
- B. Upgrading Guardrail Terminals
- C. Intermixing Wood and Steel Posts
- D. Guardrail Posts at or near the Shoulder Hinge Line
- E. Allowable Variation from Standard Height
- F. Unpainted Corrosion Resistant Beam Elements
- G. Thick Shoulder Lifts
- H. Type A Guardrail Parallel to Continuous Abutment, Twin Overpassing Structures
- I. Replacing with Thrie Beam Guardrail

7.01.43 Guidelines for Bridge Railing Replacement and Attached Approach and Trailing Guardrails

7.01.44 Guardrail Upgrading on Local Roads
- A. Guardrail Upgrading Guidelines on Local Roads (In Conjunction with Freeway Work)
- B. Cul-de-sacs
- C. Guardrail at Urban Service Road “T”
- D. Cable on Chain Link Fence

7.01.45 Alternative Barrier End Treatments
- A. X-Tension / X-MAS
- B. X-TENuator
- C. QuadTrend
- D. BEAT-SSCC

7.01.50 Temporary Beam Guardrail

7.01.54 Warrants for Median Barriers for Freeways

7.01.55 Median Barriers Types
- A. Concrete Median Barrier
- B. Double Steel Beam Guardrail
- C. Cable Barrier

7.01.56 Concrete Median Barrier
- A. GM Shape
- B. New Jersey Shape
- C. Innovative Concrete Median Barriers

7.01.57 Ending Concrete Barrier

7.01.58 Two Types of Concrete Median Barrier Footings

7.01.19 (revised 10-21-2013)

Suggested Runout Lengths for Barrier Design

Runout length is the distance from the object being shielded to the point the vehicle is assumed to depart from the roadway.

	Traffic Volume (ADT) veh/day			
	Over 10,000	Over 5,000-10,000	1000-5000	Under 1000
Design Speed (mph)	Runout Length L_R (ft)	Runout Length L_R (ft)	Runout Length L_R (ft)	Runout Length L_R (ft)
70	360	330	290	250
60	300	250	210	200
50	230	190	160	150
40	160	130	110	100
30	110	90	80	70

7.01.20 (revised 7-18-2016)

Guardrail Deflection

Being flexible barriers, both steel beam guardrail and cable barriers are expected to deflect under impact. This deflection is a result of deformation of the beam element or stretching of the steel cable, fracturing of the post (if wood) or bending of the post (if steel), and lateral displacement of the post in the soil. It is therefore necessary that room for deflection be provided between the back of the rail system (e.g. back of posts) and the object or area being shielded. For design purposes, use the chart at the end of this section for the recommended minimum design offset distances of the various guardrail systems. Refer to Section 7.01.55C, “Cable Barrier”, for expected deflections and offset recommends of cable barrier systems.

7.01.20 (continued)

It should be noted that the recommended offset distances should not be treated as absolute values, since guardrail deflection may vary for different impact conditions, soil types and moisture contents, thawed or frozen ground, different types of posts, different types of anchorages, and differing lengths of installation. Therefore, the recommended offset distances should be treated as minimums, and larger offset distances between the back of the rail system (e.g., back of posts) and the object or area being shielded should be provided where feasible. In general and, where feasible, the offset should be increased by 12 inches or more beyond the recommended minimum value. If specific site conditions are such that it is predictable that greater deflection values may occur, and space for deflection is restricted, then shorter post spacing or deeper embedment of posts should be considered. Shorter post spacing is only effective, however, if the full effect of proper post embedment is realized. See Section 7.01.41D, "Guardrail Posts at or near the Shoulder Hinge Line". See also Section 5.5.2, 2011 AASHTO Roadside Design Guide.

7.01.20 (continued)

Guardrail Deflection

Guardrail	Post Spacing	Minimum Design Offset *
Type T	1'-6¾”	1'-2"
Type T	3'-1½”	1'-8"
Type T	6'-3"	2'-0"
Type B	1'-6¾”	1'-6"
Type B	3'-1½”	2'-0"
Type B	6'-3"	3'-0"
Type MGS-8	1'-6¾”	2'-5"
Type MGS-8	3'-1½”	2'-11"
Type MGS-8	6'-3"	3'-6"
Type MGS-8 Adjacent to Curb	6'-3"	4'-1"
Type MGS-8 Near Shoulder Hinge Point **	6'-3"	4'-1"

* An additional 12” or more is desirable where feasible

** Less than 2’–8” from the shoulder hinge point to the face of guardrail post

The Zone of Intrusion (ZOI) is the region measured above and behind the face of a barrier system where an impacting vehicle or any major part of the system may extend during an impact. For a typical TL-3 system, the ZOI extends between 18" and 30" behind the traffic side face of the barrier. Where practical, the designer should keep objects out of this area. See Section 5.5.2, 2011 AASHTO Roadside Design Guide, for additional ZOI guidance.

7.01.32 (continued)

Barrier at Bridge Approaches (Over and Under)

F. Bridge Columns and Foundations in 70' Medians

Bridge columns and sign support foundations located in the center of 70' medians were once considered outside the clear zone. Shielding is now required and should be included in any programmed project upgrading.

The treatment for shielding columns and foundations for new construction and reconstruction projects should be according to the enclosed system designs shown on Standard Plan R-56-Series, Guardrail Median Object Protection.

In addition to the enclosed systems discussed in the previous section, an open system is detailed in Standard Plan R-56-Series for other than new construction and reconstruction projects with 70' medians and existing fill slope rates of 1:6 or flatter. This detail features twin parallel guardrail runs that shield the median objects independently for each direction of traffic. This option offers the advantage of better accessibility for maintenance equipment to service the median or sign foundations. It is intended only for the conditions stated above.

7.01.33 (revised 7-18-2016)

Maintaining Guardrail Strength When One or More Posts Must Be Omitted

A. Downspout Headers

Standard Plan R-32-Series, under "Notes", advises field personnel to determine the location of proposed guardrail posts prior to locating the spillway or downspout header(s). If this is done, there will be no conflict. There are occasions however, when miscalculation in construction layout or when upgrading guardrail, that an existing downspout header will prevent a post from being placed at the proper spacing. Downspout headers that were constructed prior to 1970 and according to Standard Plan E-4-A-144 series, are an example. These downspouts had deeper throats and were designed to fit 12'-6" post spacing. When a post cannot be properly placed, Standard Plan R-72-Series, "W-Beam Backed Guardrail & Guardrail Long Span Installations" should be used.

B. Wide Culverts

Maintaining the continuity of the barrier strength is also necessary when a run of guardrail spans a wide culvert and the proper embedment of a guardrail post(s) cannot be obtained. When the spanning of a wide culvert requires the omission of one or two posts, Standard Plan R-72-Series, "W-Beam Backed Guardrail & Guardrail Long Span Installations" should be used. Where no barrier wall exists and the span is over 18'-9", Standard Plan R-73-Series, "Guardrail over Box or Slab Culverts" may be used.

7.01.33 (continued)

Maintaining Guardrail Strength When One or More Posts Must Be Omitted

D. Guardrail Posts through Paved Surfaces

Guardrail posts embedded into paved surfaces present a problem similar to that of guardrail posts in rock formations. The paved surface will not allow the posts to rotate in their embedment (to distribute vehicle loads through the post into the embedment material) prior to breaking. Thus, an area of pavement around the post know as "leave out" must be omitted to allow the post to rotate. For both steel and wood posts, the size of the leave out should be an area of about 15" x 15" (square or round). The most critical measurement is the distance from the back of post to the back edge of the leave out, which should be a minimum of 7". After post installation, patching material is generally placed around the guardrail post in the "leave out" area. This work should be included by special provision.

7.01.33 (continued)

E. Additional Blockouts on Guardrail Posts

Double blockouts (16" deep) may be used to increase the post offset to avoid obstacles such as curbs. Except at terminals, there is no limit to the number of posts in a guardrail run that use double blockouts. Under special circumstances, one or two posts in a run of guardrail may employ as many as four blockouts (up to 36") to provide proper clearance. There should be no voids between blockouts when using double or multiple blockouts. Furthermore, for aesthetic reasons, double or multiple blockouts should be installed without creating sudden changes in guardrail alignment.

When using double or multiple blockouts, steps must be taken to prevent the placement of guardrail posts on steep fill slopes beyond the shoulder hinge point. Placing conventional length guardrail posts on steep fill slopes may result in posts having insufficient soil embedment depth, thereby reducing the post's strength to resist overturning. See Section 7.01.41.D, for guardrail post length requirements when placing guardrail at or near the shoulder hinge line.

7.01.40

Guard Posts for Roadside Control

Barrier systems should not be used merely for roadside control. Where it is impractical to use curb for this purpose, wooden posts without connecting beam elements will suffice. These posts should be weakened by adding two 3½" diameter holes, through the 8" face and 6" apart, with the bottom one about 1" above the ground. The holes should be perpendicular to traffic. Posts may be about 5'-0" apart or as necessary to control traffic in the specific situation. See Standard Plan R-74-Series.

7.01.41 (revised 7-18-2016)

Upgrading and Replacement of Guardrail

The upgrading and replacement of existing guardrail runs is a leading construction item in Michigan. Two principle reasons for updating are an obsolete design or because of changed conditions, e.g., a guardrail made too low by resurfacing the shoulder.

A. Guidelines for Upgrading or Replacing Guardrail

1. If entire runs of guardrail must be replaced because the guardrail is out of specifications or cannot be adjusted to meet specifications, then the guardrail should be replaced following the current MDOT recommendations as called for in Section 7.01.12.

2. Height adjustment may be made on existing guardrail posts that pass a thorough inspection for soundness. Existing beam elements should be evaluated for expected life and may be used if they meet current design standards. If the existing guardrail cannot be made to meet these conditions, then the entire run should be replaced with new guardrail using the recommended type from Section 7.01.12.

7.01.41B (continued)

Upgrading and Replacement of Guardrail

These guidelines do not apply to Capital Preventive Maintenance (CPM) projects. Safety Criteria for CPM projects are covered under a separate agreement with the FHWA.

Maintenance forces are to replace a damaged BCT with an approved terminal from Standard Plan R-61 or R-62-Series.

C. Intermixing Wood and Steel Posts

At the present time, the Standard Specifications permit the use of either wood or steel guardrail posts. Both types of posts may be randomly intermixed in making repairs on Types A, B, and T guardrail, but, for appearance, complete runs being reconstructed should utilize only one type of post. Wood and steel posts for types BD and TD cannot be intermixed because of post size.

Posts in terminals shall be the same as those specified on Standard Plans R-61-Series, R-62-Series, R-63-Series and R-66-Series. When the repair of an existing bullnose installation is necessary, wood posts shall be used.

D. Guardrail Posts at or near the Shoulder Hinge Line

Guardrail upgrading on local roads and trunklines sometimes requires setting the posts at or near the shoulder hinge line rather than 2'-0" (shoulder hinge point to front face of post) for Guardrail Types B and T, or 2'-8" (shoulder hinge point to front face of post) for Guardrail Type MGS-8, as specified on Standard Plan R-60-Series. Most of the time this condition occurs on a fill, which means that the soil support behind the post will be reduced because of the close proximity of the slope. In these cases, 8'-0" long posts should be specified for Guardrail Types B and T, and 9'-0" long posts should be specified for Guardrail Type MGS-8. If the ground does not fall away behind the guardrail, then conventional length posts are sufficient.

7.01.41 (continued)

E. Allowable Variation from Standard Height

When evaluating existing guardrail to determine upgrading needs, variation from standard barrier height is a consideration. A variation of 3" from the standard height is allowable. This is considered a functional variation. Closer tolerances are expected for construction purposes. If an existing guardrail is of the proper type, and after all phases of the proposed project are complete, e.g., shoulder resurfacing, etc., the guardrail height should be within this limit. If any work must be done on it at all, however, then the run should be brought up to standard. Before allowing such a run of guardrail to remain untouched, it should pass a thorough inspection for the soundness of posts and the expected remaining life of the beam elements. The timing of future road improvements should also be a consideration.

F. Unpainted Corrosion Resistant Beam Elements

See Section 7.01.14B. The Engineering Operations Committee meeting on January 20, 1989 decided that all existing corrosion resistant, or "rusty steel", guardrail encountered on proposed Interstate resurfacing or reconstruction projects should be removed and replaced as part of the project.

On projects involving bridges only, the nominal provisions of approach guardrail (guardrail anchorage to bridge and approach terminal) shall be replaced if the rail elements are rusty steel. Where guardrail at the bridge approaches is part of a more extensive installation, the decision to replace will be made on the merits of the specific project.

7.02.24 (continued)

Joints in Deck Slabs

B. Transverse Joints

1. Construction Joints

At construction joints where movement is anticipated, an expansion joint device shall be used. Construction joints over piers at fixed bearings are to be a sawed joint 1½" deep by ⅛" wide (minimum) in the top of slab. The joint is to be sawed within 24 hours of placing the curing and is to be filled to ¼" below top of concrete with polyurethane or polyurethane hybrid sealant Included in the bid item "Superstructure Concrete, Form, Finish, and Cure, Night Casting."
(10-24-2001)(11-28-2011) (7-18-2016)

2. Expansion Joints

The maximum single opening in an expansion joint device shall be no more than 4", measured in the direction of traffic. When movement required is greater than 4" a modular expansion joint shall be used. (5-6-99)

Expansion joint devices shall be installed ¼" to ⅜" below the adjacent deck elevation. This fact shall be taken into account during design. This recess is to prevent damage to the joint from snow plows. (5-6-99) (2-16-2015)

7.02.24 (continued)

The EJ3 Sheet included with the plans will designate the total travel that is required at each joint, measured along the centerline of bridge, and the angle of crossing rounded off to the nearest 10º. The length of the device required at each location will be shown, and these lengths totaled for one bid item, "Expansion Joint Device." The fact that the one item includes several minimum travel requirements should not affect the bid price since we currently find little or no difference when we list minimum travels separately. The EJ4 Sheet shall be used with replacement of existing neoprene expansion joint devices. Use of EJ4 Sheet (device) requires Form 0304 (Proprietary Item Certification (PIC) and Public Interest Finding (PIF)) be filled out and placed in the project file for Delcrete Elastomeric Concrete (D.S. Brown, 300 East Cherry Street, North Baltimore, OH 45872, Telephone: 419.257.3561). Delcrete is a PIC with "No Equally Suitable Alternative". See section 15.04 and section 11.08 of the Road Design Manual. (8-20-2009)
(2-16-2015)

After contract award and before placing the order, the contractor shall inform the Engineer which devices and models they intend to install. The Engineer will provide standard shop drawings of the joint device. (2-16-2015)

When an expansion joint device is used on a sidewalk it shall be fitted with a cover plate as described and detailed in Section 7.02.27 and EJ3 and EJ4 Sheets.
(8-20-2009)

7.02.24 (continued)

Joints in Deck Slabs

B. Transverse Joints

1. Construction Joints

   At construction joints where movement is anticipated, an expansion joint device shall be used. Construction joints over piers at fixed bearings are to be a sawed joint 1½" deep by ⅛" wide (minimum) in the top of slab. The joint is to be sawed within 24 hours of placing the curing and is to be filled to ¼" below top of concrete with polyurethane or polyurethane hybrid sealant Included in the bid item "Superstructure Concrete, Form, Finish, and Cure, Night Casting."
   (10-24-2001)(11-28-2011) (7-18-2016)

2. Expansion Joints

   The maximum single opening in an expansion joint device shall be no more than 4", measured in the direction of traffic. When movement required is greater than 4" a modular expansion joint shall be used. (5-6-99)

   Expansion joint devices shall be installed ¼" to ⅜" below the adjacent deck elevation. This fact shall be taken into account during design. This recess is to prevent damage to the joint from snow plows. (5-6-99) (2-16-2015)

7.02.24 (continued)

The EJ3 Sheet included with the plans will designate the total travel that is required at each joint, measured along the centerline of bridge, and the angle of crossing rounded off to the nearest 10º. The length of the device required at each location will be shown, and these lengths totaled for one bid item, "Expansion Joint Device." The fact that the one item includes several minimum travel requirements should not affect the bid price since we currently find little or no difference when we list minimum travels separately. The EJ4 Sheet shall be used with replacement of existing neoprene expansion joint devices. Use of EJ4 Sheet (device) requires Form 0304 (Proprietary Item Certification (PIC) and Public Interest Finding (PIF)) be filled out and placed in the design folder for Delcrete Elastomeric Concrete (D.S. Brown, 300 East Cherry Street, North Baltimore, OH 45872, Telephone: 419.257.3561). Delcrete is a PIC with "No Equally Suitable Alternative". See section 15.04 and section 11.08 of the Road Design Manual. (11-28-2011) (2-16-2015)

After contract award and before placing the order, the contractor shall inform the Engineer which devices and models they intend to install. The Engineer will provide standard shop drawings of the joint device. (2-16-2015)

When an expansion joint device is used on a sidewalk it shall be fitted with a cover plate as described and detailed in Section 7.02.27 and EJ3 and EJ4 Sheets.
(11-28-2011)

8.07.01(continued)

Miscellaneous Notes

Q. Silica Fume Modified Concrete or Latex Modified Concrete may be selected for the bridge deck overlay concrete. (9-2-2003)

R. The contractor may use metal stay in place forms. If used, eliminating the polystyrene and filling the corrugations with concrete is prohibited. [Use with metal stay in place forms where design calculations show the increase in dead load will result in an over stress.] (8-20-99)

S. The contractor shall not use stay-in-place forms. All materials used to form the deck must be removed prior to opening the bridge to traffic. [Use where beam spacing or form loads preclude the use of stay-in-place forms.] (9-2-2003)

T. The deck shall be saw-cut on both the top and bottom surface prior to deck removal procedures. [Use with bridge widening when the saw-cut is on the outside of the fascia beam or with removal procedures required for stage construction.] (8-20-2009)

U. Fill perpendicular railing joints with 1" joint filler to ½" from the bevels of railing and seal remaining ½" with a silicone rubber sealant. Included in the bid item (Bridge Barrier Railing, (Type 4) (Type 5)) (Bridge Railing, Aesthetic Parapet Tube). [Use in all concrete railings over the piers of continuous deck, at midspan on all structures with a span greater than 100'-0" and cantilever decks where the cantilever is more than 10'-0" long.] (12-5-2005)

8.07.01(continued)

V. The Contractor is to provide a sawed joint ½" [1½"] deep by 1/8" wide (minimum) in the top of slab at [transverse construction joints] [at longitudinal construction joints] [and at fixed pin & hanger joints] [the locations shown in section(s)___]. The joint is to be sawed within 24 hours of placing the curing and is to be filled to ¼" below top of concrete with polyurethane or polyurethane hybrid sealant. (Included in the bid item "Superstructure Conc, Form, Finish, and Cure, Night Casting (Structure No.)"). [Use at all construction joints. Use 1½" by 1/8" at the locations shown for continuous for live load slabs.] (11-28-2011) (7-18-2016)

W. Additional concrete and forming used to increase slab depth at the Bridge Railing, 2 Tube will not be paid for separately, but shall be included in the bid item "Superstructure Conc (, Night Casting)." [Use when 2 tube railing is placed between traffic and a pedestrian sidewalk or when railing is not on overhang portion of deck slab.] (12-5-2005)

X. No portion of deck formwork or supports shall protrude above the top of proposed haunch (or top of the beam where there is no proposed haunch). (8-20-2009)

Y. In order to maintain the integrity of the existing structure during Stage ____ construction, the contractor shall saw cut entirely through the (abutment) (pier) and a minimum of 4" into the top of footing for removal purposes. [Used with part width construction]. (12-17-2012)

8.07.01(continued)

Miscellaneous Notes

Z. The Contractor is to provide a sawed joint [1/3 deck slab thickness*] ” deep by ¼“ wide (minimum) in the top of slab at transverse construction joints over the backwall. If an optional construction joint is not used, the joint is to be sawed within 24 hours of placing the curing and is to be filled to ½” below top of concrete with polyurethane or polyurethane hybrid sealant. (Included in the bid item "Superstructure Conc, Form, Finish, and Cure, Night Casting (Structure No.)"). [Use at all at bridge deck slab construction joints over integral and semi-integral backwalls.] *[Specify thickness to avoid cutting steel reinforcement.]
(6-17-2013) (7-22-2013) (7-18-2016)

8.07.01(continued)

Miscellaneous Notes

Q. Silica Fume Modified Concrete or Latex Modified Concrete may be selected for the bridge deck overlay concrete. (9-2-2003)

R. The contractor may use metal stay in place forms. If used, eliminating the polystyrene and filling the corrugations with concrete is prohibited. [Use with metal stay in place forms where design calculations show the increase in dead load will result in an over stress.] (8-20-99)

S. The contractor shall not use stay-in-place forms. All materials used to form the deck must be removed prior to opening the bridge to traffic. [Use where beam spacing or form loads preclude the use of stay-in-place forms.] (9-2-2003)

T. The deck shall be saw-cut on both the top and bottom surface prior to deck removal procedures. [Use with bridge widening when the saw-cut is on the outside of the fascia beam or with removal procedures required for stage construction.] (9-18-98) (11-28-2011)

U. Fill perpendicular railing joints with 1" joint filler to ½" from the bevels of railing and seal remaining ½" with a silicone rubber sealant. Included in the bid item (Bridge Barrier Railing, (Type 4) (Type 5)) (Bridge Railing, Aesthetic Parapet Tube). [Use in all concrete railings over the piers of continuous deck, at midspan on all structures with a span greater than 100'-0" and cantilever decks where the cantilever is more than 10'-0" long.] (12-5-2005)

8.07.01(continued)

V. The Contractor is to provide a sawed joint ½" [1½"] deep by 1/8" wide (minimum) in the top of slab at [transverse construction joints] [at longitudinal construction joints] [and at fixed pin & hanger joints] [the locations shown in section(s)___]. The joint is to be sawed within 24 hours of placing the curing and is to be filled to ¼" below top of concrete with polyurethane or polyurethane hybrid sealant. (Included in the bid item "Superstructure Conc, Form, Finish, and Cure, Night Casting (Structure No.)"). [Use at all construction joints. Use 1½" by 1/8" at the locations shown for continuous for live load slabs.] (11-28-2011) (7-18-2016)

W. Additional concrete and forming used to increase slab depth at the Bridge Railing, 2 Tube will not be paid for separately, but shall be included in the bid item "Superstructure Conc (, Night Casting)." [Use when 2 tube railing is placed between traffic and a pedestrian sidewalk or when railing is not on overhang portion of deck slab.] (12-5-2005)

X. No portion of deck formwork or supports shall protrude above the top of proposed haunch (or top of the beam where there is no proposed haunch). (11-28-2011)

Y. In order to maintain the integrity of the existing structure during Stage ____ construction, the contractor shall saw cut entirely through the (abutment) (pier) and a minimum of 4" into the top of footing for removal purposes. [Used with part width construction]. (12-17-2012)

8.07.01(continued)

Miscellaneous Notes

Z. The Contractor is to provide a sawed joint [1/3 deck slab thickness*] ” deep by ¼“ wide (minimum) in the top of slab at transverse construction joints over the backwall. If an optional construction joint is not used, the joint is to be sawed within 24 hours of placing the curing and is to be filled to ½” below top of concrete with polyurethane or polyurethane hybrid sealant. (Included in the bid item "Superstructure Conc, Form, Finish, and Cure, Night Casting (Structure No.)"). [Use at all bridge deck slab construction joints over integral and semi-integral backwalls.] *[Specify thickness to avoid cutting steel reinforcement.] (6-17-2013) (7-22-2013) (7-18-2016)

DRAWN BY: BLT	MICHIGAN DEPARTMENT OF TRANSPORTATION BUREAU OF HIGHWAY DEVELOPMENT	ISSUED: 07/18/16
CHECKED BY: VZ	TYPICAL SECTION THRU INDEPENDENT BACKWALL WITH SLIDING SLAB	SUPERSEDES: 10/19/15
APPROVED BY: DAJ		

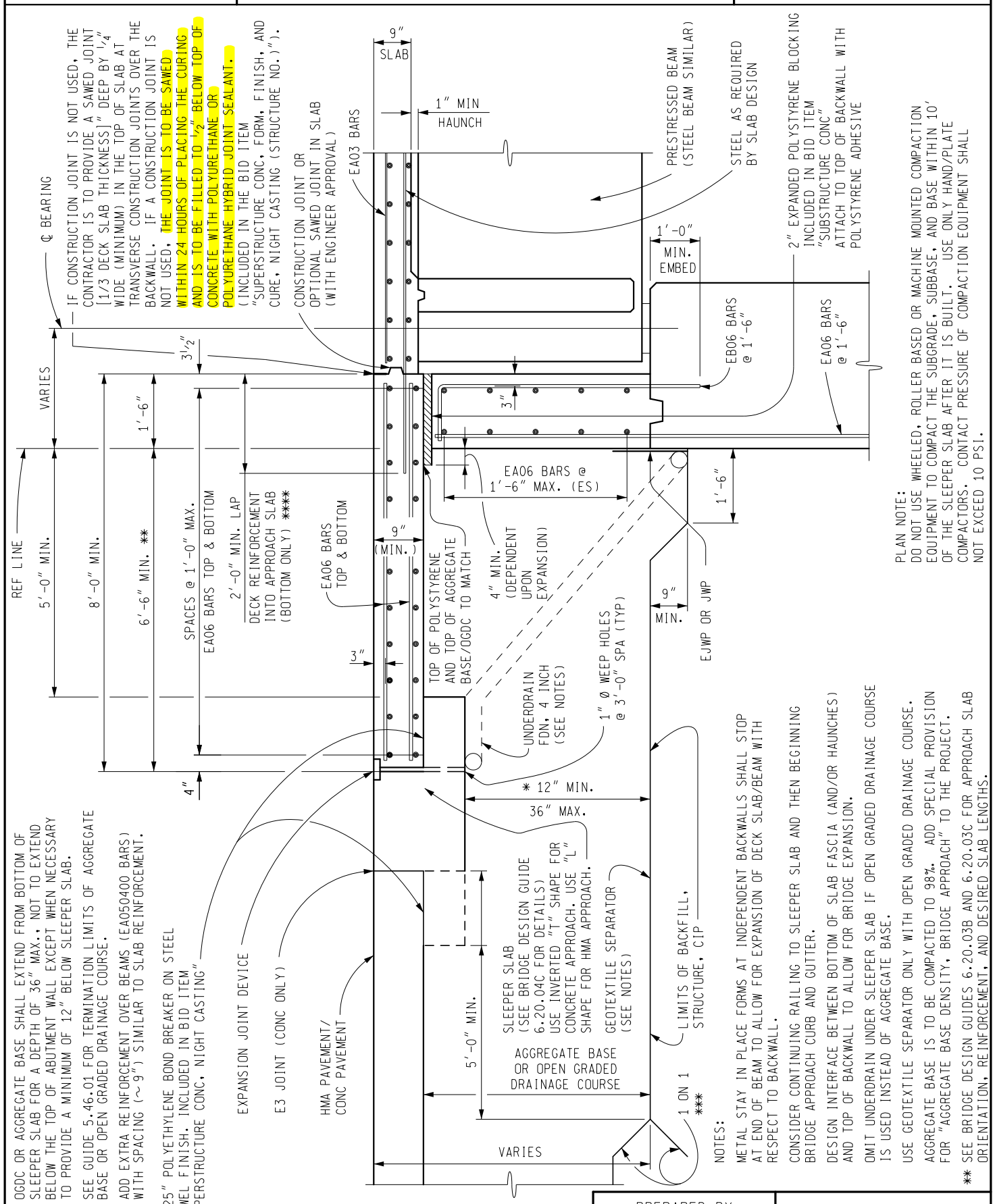

PLAN NOTE:
DO NOT USE WHEELED, ROLLER BASED OR MACHINE MOUNTED COMPACTION EQUIPMENT TO COMPACT THE SUBGRADE, SUBBASE, AND BASE WITHIN 10' OF THE SLEEPER SLAB AFTER IT IS BUILT. USE ONLY HAND/PLATE COMPACTORS. CONTACT PRESSURE OF COMPACTION EQUIPMENT SHALL NOT EXCEED 10 PSI.

* OGDC OR AGGREGATE BASE SHALL EXTEND FROM BOTTOM OF SLEEPER SLAB FOR A DEPTH OF 36" MAX., NOT TO EXTEND BELOW THE TOP OF ABUTMENT WALL EXCEPT WHEN NECESSARY TO PROVIDE A MINIMUM OF 12" BELOW SLEEPER SLAB.

*** SEE GUIDE 5.46.01 FOR TERMINATION LIMITS OF AGGREGATE BASE OR OPEN GRADED DRAINAGE COURSE.

**** ADD EXTRA REINFORCEMENT OVER BEAMS (EA050400 BARS) WITH SPACING (~9") SIMILAR TO SLAB REINFORCEMENT.

0.025" POLYETHYLENE BOND BREAKER ON STEEL TROWEL FINISH. INCLUDED IN BID ITEM "SUPERSTRUCTURE CONC, NIGHT CASTING"

NOTES:

METAL STAY IN PLACE FORMS AT INDEPENDENT BACKWALLS SHALL STOP AT END OF BEAM TO ALLOW FOR EXPANSION OF DECK SLAB/BEAM WITH RESPECT TO BACKWALL.

CONSIDER CONTINUING RAILING TO SLEEPER SLAB AND THEN BEGINNING BRIDGE APPROACH CURB AND GUTTER.

DESIGN INTERFACE BETWEEN BOTTOM OF SLAB FASCIA (AND/OR HAUNCHES) AND TOP OF BACKWALL TO ALLOW FOR BRIDGE EXPANSION.

OMIT UNDERDRAIN UNDER SLEEPER SLAB IF OPEN GRADED DRAINAGE COURSE IS USED INSTEAD OF AGGREGATE BASE.

USE GEOTEXTILE SEPARATOR ONLY WITH OPEN GRADED DRAINAGE COURSE.

AGGREGATE BASE IS TO BE COMPACTED TO 98%. ADD SPECIAL PROVISION FOR "AGGREGATE BASE DENSITY, BRIDGE APPROACH" TO THE PROJECT.

** SEE BRIDGE DESIGN GUIDES 6.20.03B AND 6.20.03C FOR APPROACH SLAB ORIENTATION, REINFORCEMENT, AND DESIRED SLAB LENGTHS.

PREPARED BY DESIGN DIVISION	6.20.03A

DRAWN BY: BLT CHECKED BY: VZ APPROVED BY: DAJ	MICHIGAN DEPARTMENT OF TRANSPORTATION BUREAU OF HIGHWAY DEVELOPMENT INTEGRAL AND SEMI-INTEGRAL ABUTMENT BACKWALL	ISSUED: 07/18/16 SUPERSEDES: 10/19/15

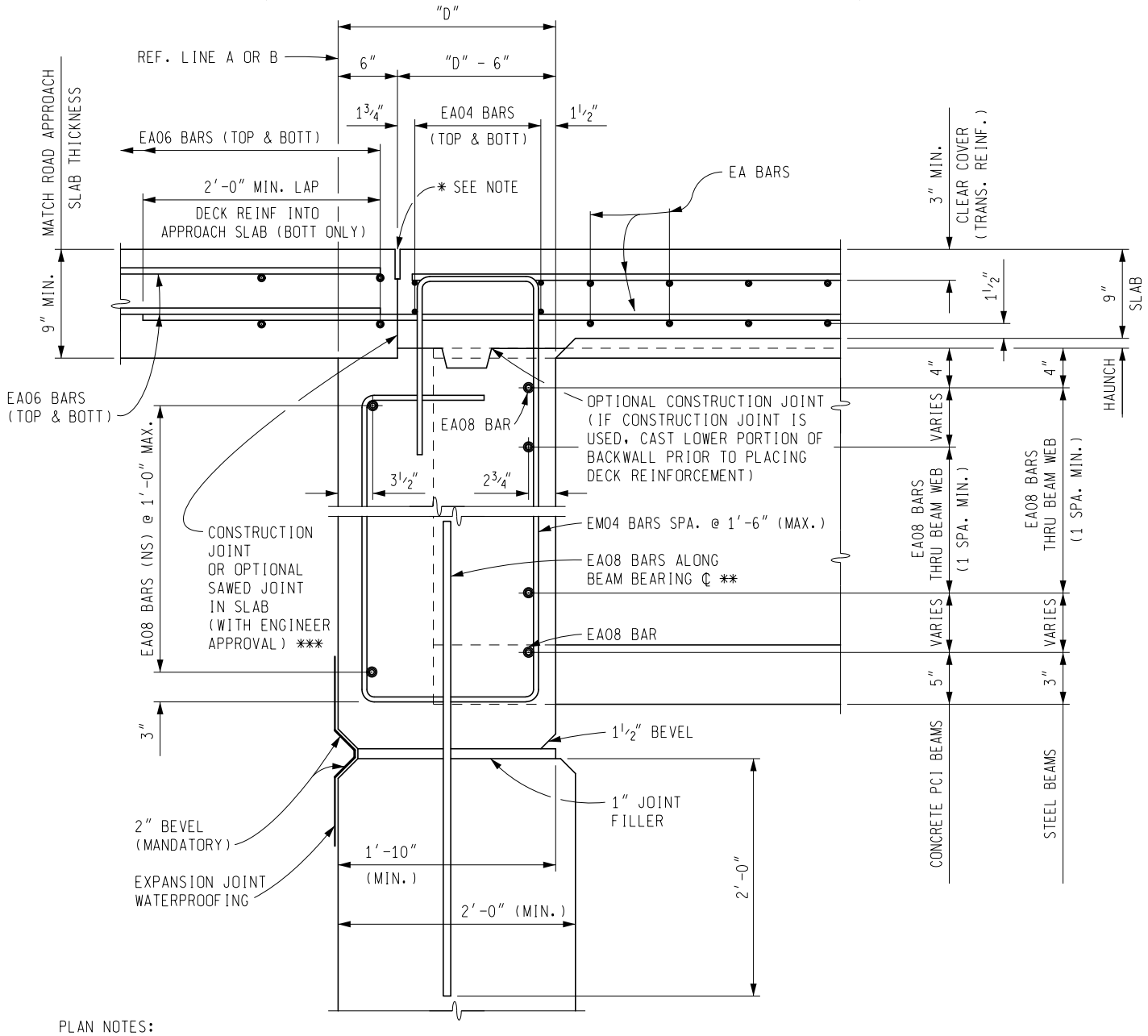

PLAN NOTES:

WHERE OPTIONAL CONSTRUCTION JOINTS ARE USED, THERE WILL BE NO PAYMENT FOR THE REQUIRED JOINT WATERPROOFING.

* IF A CONSTRUCTION JOINT IS NOT USED, THE CONTRACTOR IS TO PROVIDE A SAWED JOINT [1/3 DECK SLAB THICKNESS]" DEEP BY ¼" WIDE (MINIMUM) IN THE TOP OF SLAB AT TRANSVERSE CONSTRUCTION JOINTS OVER THE BACKWALL. IF A CONSTRUCTION JOINT IS NOT USED, THE JOINT IS TO BE SAWED WITHIN 24 HOURS OF PLACING THE CURING AND IS TO BE FILLED TO ½" BELOW TOP OF CONCRETE WITH POLYURETHANE OR POLYURETHANE HYBRID JOINT SEALANT. (INCLUDED IN THE BID ITEM "SUPERSTRUCTURE CONC, FORM, FINISH, AND CURE, NIGHT CASTING (STRUCTURE NO.)").

NOTES:

INTEGRAL AND SEMI-INTERGRAL ABUTMENT BRIDGES SHALL BE CONSIDERED FOR STEEL BRIDGES LESS THAN 300' AND CONCRETE BRIDGES LESS THAN 400' IN LENGTH.

APPROACH SLAB THICKNESS WILL MATCH THE ROAD APPROACH THICKNESS (9" MIN.)

CONTINUE BOTTOM MAT OF REINFORCEMENT THROUGH CONSTRUCTION JOINT. ADD EXTRA REINFORCEMENT OVER BEAM (EA050400 BARS).

** USE FOR INTEGRAL ABUTMENT BRIDGES ONLY.

*** THE JOINT IS NOT OPTIONAL, BUT REQUIRED IF CASE I (SEE BRIDGE MANUAL 7.03.01) REQUIRES NOT BACKFILLING ABOVE THE BRIDGE SEAT.

SEMI-INTEGRAL ABUTMENTS SHOULD BE USED AT STREAM CROSSINGS.

D = BACKWALL THICKNESS. SEE GUIDE 6.20.01 FOR DEFINITION.

PREPARED BY DESIGN DIVISION	6.20.04

DRAWN BY: BLT CHECKED BY: VZ APPROVED BY: DAJ	MICHIGAN DEPARTMENT OF TRANSPORTATION BUREAU OF HIGHWAY DEVELOPMENT PIER DIAPHRAGMS FOR PRESTRESSED CONCRETE BEAMS CONTINUOUS FOR LIVE LOAD	ISSUED: 07/18/16 SUPERSEDES: 05/04/06

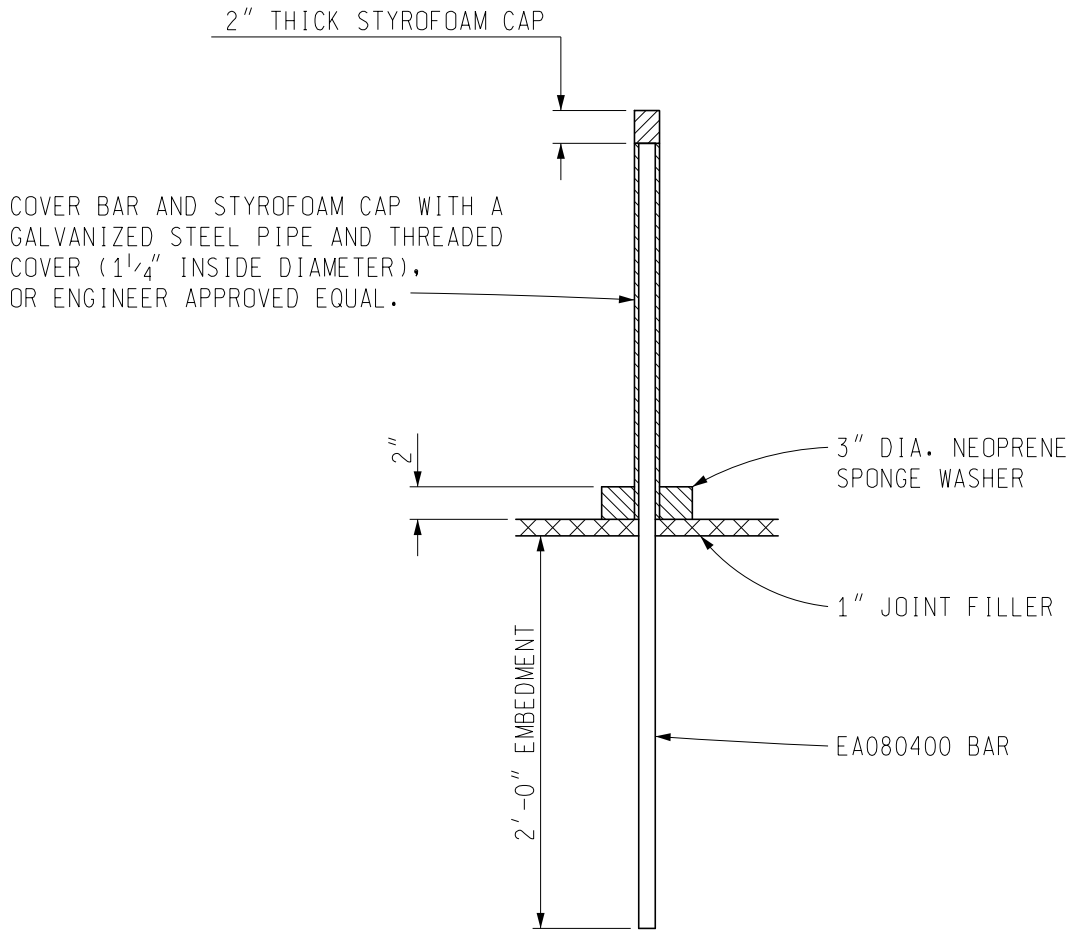

DETAIL B

ALL WORK AND MATERIAL FOR THE STYROFOAM CAP, METAL SLEEVE AND NEOPRENE SPONGE WASHER SHALL BE INCLUDED IN THE BID ITEM "SUPERSTRUCTURE CONC, NIGHT CASTING."

PLAN NOTES:

BLOCK OUT CONCRETE AT ELASTOMERIC BEARINGS. ATTACH NO. 30 ASPHALT FELT WITH ROOFING TAR/ASPHALT TO SIDES OF BEAMS FROM BEAM END TO 1" PAST EDGE OF PIER DIAPHRAGM. REMOVE 1" EXCESS ON OUTSIDE OF FASCIA BEAMS AFTER DIAPHRAGM FORM REMOVAL. ALL LABOR, MATERIALS AND CLEANUP/REMOVAL ARE INCLUDED IN THE BID ITEM "SUPERSTRUCTURE CONC, NIGHT CASTING."

JOINT BETWEEN BEAM ENDS SHALL BE FILLED WITH CONCRETE.

THE CONTRACTOR IS TO PROVIDE A SAWED JOINT 1½" DEEP x ⅛" WIDE (MIN.) IN THE TOP OF SLAB AT THE LOCATIONS SHOWN IN SECTION(S) . THE JOINT IS TO BE SAWED WITHIN 24 HOURS OF PLACING THE CURING AND IS TO BE FILLED TO ¼" BELOW TOP OF CONCRETE WITH POLYURETHANE OR POLYURETHANE HYBRID SEALANT. (INCLUDED IN THE BID ITEM "SUPERSTRUCTURE CONC, FORM, FINISH, AND CURE, NIGHT CASTING (STRUCTURE NO.).")

PREPARED BY DESIGN DIVISION	6.60.11A

DRAWN BY: BLT CHECKED BY: VZ APPROVED BY: DAJ	MICHIGAN DEPARTMENT OF TRANSPORTATION BUREAU OF HIGHWAY DEVELOPMENT PIER FOR PRESTRESSED CONCRETE BOX BEAMS CONTINUOUS FOR LIVE LOAD	ISSUED: 07/18/16 SUPERSEDES: 02/14/11

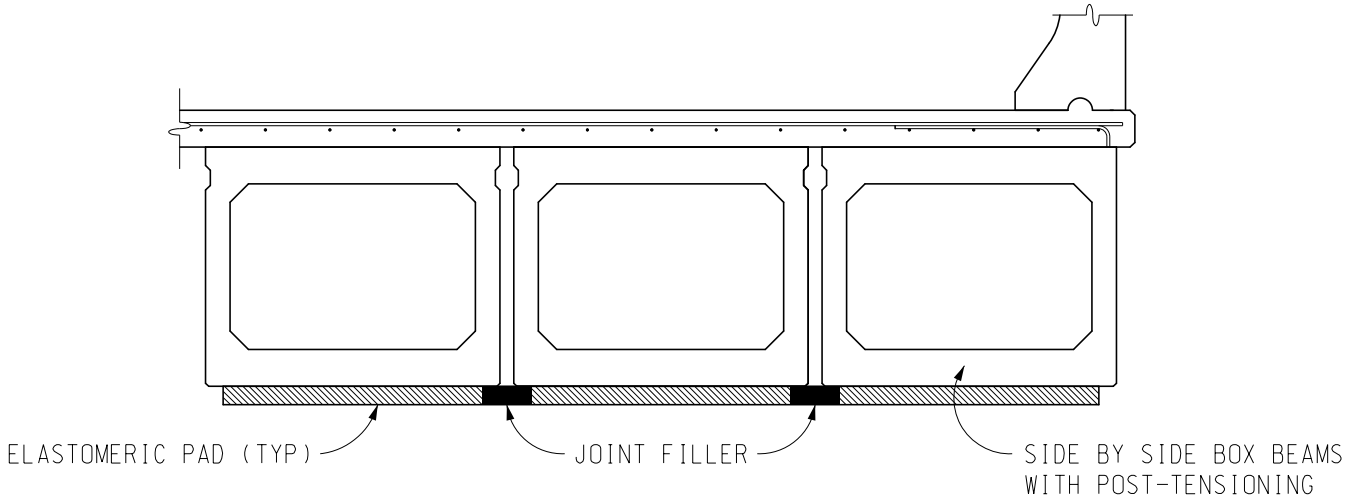

PIER ELEVATION

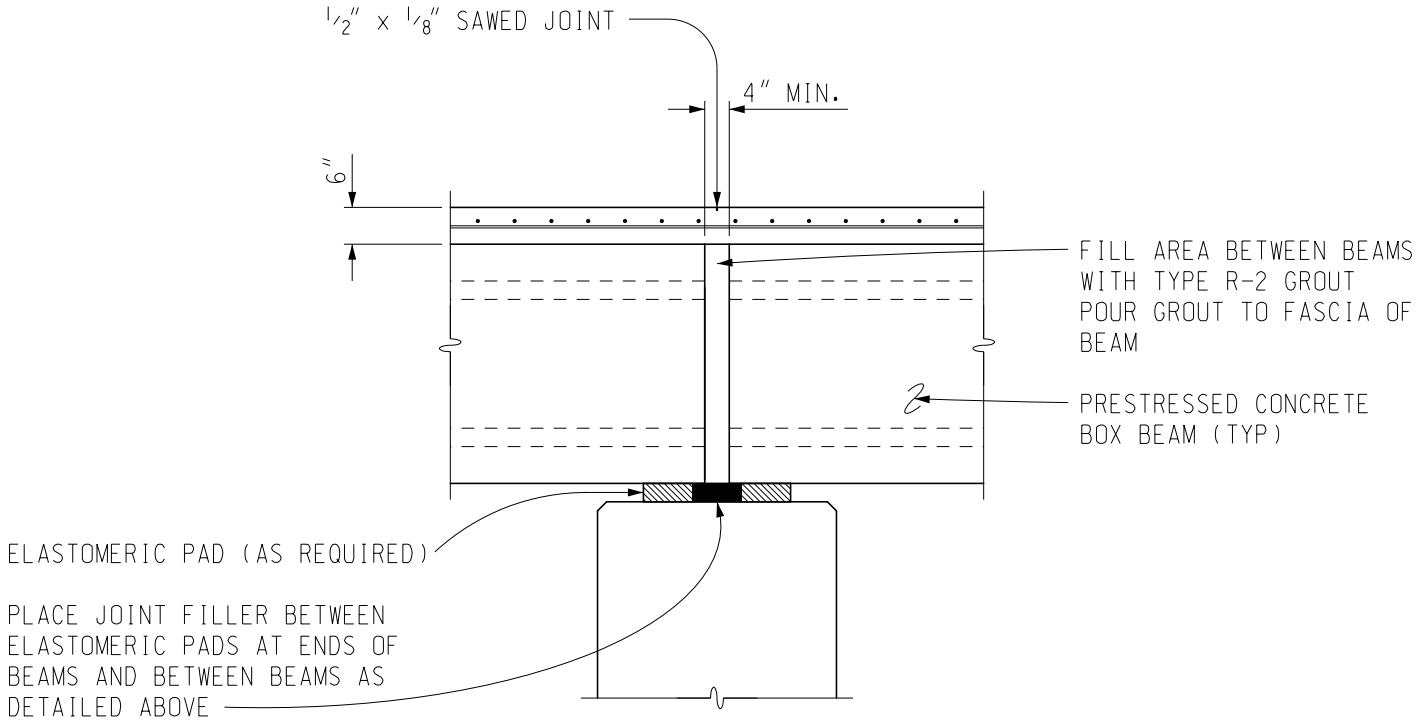

PLAN NOTES:

THE CONTRACTOR IS TO PROVIDE A SAWED JOINT 1/2" DEEP x 1/8" WIDE (MIN.) IN THE TOP OF SLAB AT THE LOCATIONS SHOWN IN SECTION(S) . THE JOINT IS TO BE SAWED WITHIN 24 HOURS OF PLACING THE CURING AND IS TO BE FILLED TO 1/4" BELOW TOP OF CONCRETE WITH POLYURETHANE OR POLYURETHANE HYBRID SEALANT. (INCLUDED IN THE BID ITEM "SUPERSTRUCTURE CONC, FORM, FINISH, AND CURE, NIGHT CASTING (STRUCTURE NO.).")

NOTES:

PRESTRESSED CONCRETE BEAMS SHALL BE DESIGNED AS SIMPLE SPAN BEAMS FOR DEAD LOAD AND LIVE LOAD. THE BRIDGE SLAB SHALL BE DESIGNED CONTINUOUS FOR LIVE LOAD OVER PIERS.

PREPARED BY DESIGN DIVISION	6.60.11B

HMS analysis is an optional method to document the safety impacts of a design exception. A predictive crash analysis can be completed to demonstrate the future safety impacts of the design exception itself (what will not be provided) as well as the impacts of the proposed countermeasures.

For additional information or training on the HSM methods please contact the MDOT Safety Programs unit or visit http://www.highwaysafetymanual.org.

Permanent Traffic Recorder

Determining whether PTR will need to be replaced

As projects are selected, the locations of any existing Permanent Traffic Recorders (PTRs) should be identified. If it is determined that there should be replacement of existing PTR(s) or new PTR locations within the proposed project limits, costs estimates for these should be included in the project estimates. The decision for new PTR installation should be done after consultation with the Region and Lansing Planning Staff and the Commercial Vehicle Enforcement Plan within each Region. Available funding for the proposed work should be discussed and identified during the project scoping, before moving forward to design.

Region and Lansing Planning Staff

Seeing where PTRs are located

A map that details the PTR location, including control section and milepoint information, can be provided by each Region's Development Staff and is also available on the Connect MDOT Intranet. A link named Permanent Traffic Recorders is on the Transportation Planning main web page, displaying a map of the PTR information within each region.

For bridge projects, a PTR may be found between bridge piers or near the slope. At these locations, MDOT has loops and/or sensors usually within 20 to 100 feet of the structure.

Traffic Count Request, Timing and Process

(revised 7-18-2016)

Requesting traffic counts

TAR Form 1730

When traffic counts are required (for mobility analysis, pavement design, intersection signal warrants, turn lanes and etc) and/or requested, fill out the Traffic Analysis Request (TAR) form (Form#1730).

Guardrail or Concrete/Cable Median Barriers (Existing and Proposed)

The existing guardrail and/or concrete or cable median barriers shall be identified and the condition noted on the worksheet. In addition, the proposed guardrail and/or concrete or cable median barrier shall be noted for inclusion in the scoping document and estimate of the project.

Utilities (Existing and Proposed) (revised 7-18-2016)

This section is where existing public and private utilities are identified. The TSC Utility Coordinator can provide a list of potential utilities (private and public) within the proposed project limits. Preliminary Planning/Scoping Letter (Form#2483) should be sent to all the utilities requesting preliminary locations of the existing utilities. Form#2483 also serves as notice to the utilities of a potential project. Depending on the project type, these existing utilities may be impacted by the proposed work. These known, potentially impacted, utilities are identified on the worksheet and noted in the scoping documents. The utility section is not included on the Road CPM or Bridge CPM/CSM Scoping Report & Details Worksheets, since CPM type work does not typically impact utilities.

Traffic Signals (Existing and Proposed)

Identification of existing and proposed traffic signal needs and upgrades are identified in these sections of the worksheet.

Sidewalks (Existing and Proposed)

Identification of existing sidewalks, sidewalk ramps and sidewalk condition shall be noted in this section. Additionally, if there is evidence of a footpath or the need for proposed sidewalks, this too shall be noted. Region Sidewalk Ramp Inventory information may be obtained by contacting the Region Development Staff for the. In developing the proposed work for the sidewalk and ramps, it is important to consider the existing design elements and how they relate to the current standards. Proposed sidewalk, ramp upgrades or additions are noted in the proposed section of the checklist. Bus stops and on-street parking, within the project limits, should be reviewed for ADA compliance and discussed with the local communities.

General Conditions (Existing and Proposed)

This section of the checklist is a list of other miscellaneous items that should be reviewed and discussed during the scoping process for each project.

Concept Statement Information

MAPProject Information System (MPINS)

This is the information that will be input into MAP Project Information System (MPINS) during the programming stage of a project. This information is required for a project to move from the scoping phase to the programming phase. Design may begin after the obligation of the programmed C phase. Refer to Chapter 10 of this manual for more information on obtaining a job number and creating a project concept statement.

Checklist for Constructability Review – Early Project Scoping (revised 7-18-2016)

The Constructability Checklist should be used to document that issues related to the constructability of the proposed project have been reviewed and discussed. Some issues related to the constructability of the project include a review of a site investigation, construction staging and maintenance of traffic. Early identification of non-constructable or difficult to construct projects may indicate that additional items or different work types should be analyzed (i.e. scope and schedule impacts). The Checklist for Constructability Review – Early Project Scoping form (Form#1961) shall be included in the scoping package and will be included in the project folder, as well as in ProjectWise.

Culvert Scope Inspection Form (revised 7-18-2016)

Documenting the culverts which must be inspected during scoping

Culvert guidelines

The Culvert Scope Inspection form (Form#0592) should be completed for all culverts within the project limits requiring work ranging in size from 36" in diameter to less than 10' width. Culverts 10' and greater are inspected annually and those inspections reports should be reviewed as part of the scoping process. Culverts smaller than 36" should be looked at and any issues with the culverts should be noted in the scoping notes. Instructions for completing the Culvert Scope Inspection form are included with the form.

Depending on the scope of the proposed project, and a review of the records and the Culvert Scope Inspection form, corrective actions and construction costs may need to be developed. This process may involve a structural engineer, hydraulic engineer, geotechnical engineer, right-of-way specialist, permit specialist and others as needed. Culvert Scope Inspection form items with a "Yes" answer or rating "Poor" should be considered for corrective action and/or further discussion. Scope development will include itemizing pay item quantities, construction method recommendations and costs. The required Culvert Scope Inspection form shall be included in the scoping package and will be included in the project folder, as well as in ProjectWise.

The Bridge Deck Preservation Matrix

Use and limits of the Bridge Deck Preservation Matrix

The Bridge Deck Preservation Matrix, included in Appendix A-6, is a tool for Bridge Engineers to use in the selection of bridge deck repair options. The condition of the deck is usually the key indicator, leading to a structure being considered for rehabilitation or replacement. However, there are other issues affecting a bridge that may require the need for a rehabilitation project and the matrix may not address these other situations. Some of these situations include, but are not limited to, superstructure deterioration, substructure deterioration, corridor coordination, capacity issues and functional issues such as underclearance, horizontal clearance and/or bridge width. Sometimes it is desirable for an entire corridor to be brought up to a specific condition level as part of an overall strategy. The user is cautioned when interpreting the information from the matrix, to consider the context of each specific case and to use engineering judgment.

Cost Estimates

How cost estimates are generated

Cost estimates for scoped projects are required to be included in the scoping package. These estimates will be generated from Trns•port. The details for estimating projects and the use of Trns•port for generating these estimates is discussed more in Chapter 8. The quality, clarity and depth of these estimates are very important as these are used for budgeting and programming the projects. There are two reports that may be developed as a result of Trns•port scope estimating. They are "The Itemized Estimate Report" and "The Project Concept Estimate Report". These two documents shall be included in the scoping package and will be included in the project folder, as well as in ProjectWise. Refer to Chapter 8 of this manual for additional information.

Documentation of Decisions (revised 7-18-2016)

Importance of making documentation thorough and understandable to others

Documentation of items discussed and decisions reached during the scoping process should be detailed enough for others to follow later in the design and construction phases. Decisions should be documented including items that are not included in the scoping package or work types considered and dismissed, so that the designers and others reviewing the scoping package will understand the decision process (and not go through some of the same discussions that have already occurred). This documentation, Scoping Project Record form (Form#0591) shall be included in the scoping package and will be included in the project folder, as well as in ProjectWise. The Scoping Project Record form is to document the scoping history in each scoping package. In addition, see Chapter 6 for more information regarding the importance of documentation. Documentation of decisions is also important in the Change Management process, as outlined in Chapter 10.

Chapter 6 of the Road Design Manual for guidelines regarding when shoulder and/or centerline corrugations are required.

Traffic Signals Unit
Traffic & Safety in Lansing

Obtain estimates for work on the traffic signals and the related components should be obtained from the Traffic Signals Unit of Traffic & Safety in Lansing. This staff will need to know the limits and type of work for the proposed project. Additionally, they will need to know the anticipated method for maintaining traffic, as this may require the installation of new temporary signals or the relocation of existing signal heads. Estimates for impacts to traffic loop detectors will be provided if necessary, in addition to the estimates for the traffic signals themselves.

Traffic & Safety Engineer

The estimator should discuss, with the Traffic & Safety Engineer, the scope of work and the compatibility of different phasing or MOT alternatives to give the Traffic & Safety Engineer a thorough understanding of the scope of work and potentially viable MOT alternatives. This will allow the Traffic & Safety Engineer to analyze the best or most efficient method of maintaining traffic during the construction of the project, in accordance with MDOT's Work Zone Safety and Mobility Policy. Be aware of all the items that may be necessary to include in the estimate. Items to maintain traffic may go beyond plastic drums, temporary signs and temporary pavement markings. Depending on the proposed method of MOT, temporary widening may be needed. Include in the estimate the cost of this HMA and the cost to remove it. Also, if rumble strips need to be filled in to maintain traffic flow during construction, include the cost to fill and remove this HMA.

Items needed beyond drums, signs, and pavement markings

TSC Manager and Delivery staff
Local agency involved with detour

Rules for estimating costs of minor traffic devices and flag control

If a detour route is proposed, include in the estimate any improvements to the detour route, either before or after use by MDOT. It is very important to discuss the proposed detours with the TSC Manager and the Delivery staff. Not all detours require upgrades or modifications. The appropriate staff may have prior knowledge of the condition or agreements for a particular detour plan. It may be beneficial to have prior discussion with the local agency that will be involved with the detour. Some projects require modifications to existing traffic signals or installations of temporary traffic signals in order to maintain traffic. The cost of this signal work must be included in the estimate. The cost for Minor Traffic Devices, which is used on all projects, is 0.5 percent of the interim construction cost. To compute the cost for Flag Control, if applicable to the project, 0.5 percent of the interim construction cost should be used.

Utilities (revised 7-18-2016)

Avoiding conflicts with utility poles, street lights etc.

At the scoping stage, review old plans to investigate the presence of utilities on the project. Additionally, a field review of the site may identify the existence of utilities within the project limits. The presence of large utilities, transmissions lines or vaults can seriously impact project cost and schedule. Utilizing Preliminary Planning/Scoping Letter (Form#2483) the scoping may be used to acquire existing utility information from the utility companies. Using all three methods of obtaining existing utility information will aid in identifying potential conflicts and a more informed cost estimate for utility relocation. Private Utility companies will be

contacted during the design phase, to request additional utility location maps and information.

MDOT policy on utility reimbursement

MDOT will relocate municipal utilities (including sanitary sewers, storm sewers, power lines, power poles, street lights, communications lines and etc at project costs) not including betterments, only when they are in direct conflict with the proposed construction. Betterments are the responsibility of the municipality having jurisdiction over the utility.

Watermain may be a potential threat for the roadway. The current policy requires an evaluation of Evaluate the existing water main's watermain's condition (per the current policy), break/fix history and age, to estimate its potential effects on the life cycle of the proposed pavement and.

Splitting water main costs

Municipality officials
Governmental Coordination Engineer

Guidance Document 10087

If it is determined that the watermain relocation will be included with the project, the municipality shall be required to participate in 50 percent of the non-federal costs of the installed price of the main and appurtenances. Initiate an agreement with the municipality, through the Governmental Coordination Engineer. Watermain betterments shall be in accordance with the Guidance Document 10087. If it is determined that watermain relocation will not be included with the project, but watermain relocations which are required due to direct construction conflicts, these costs shall be included in the project cost estimate.

TSC Utility Coordinator
Municipality Utility Unit, Design Division in Lansing

For assistance in estimating municipal utility relocation work, specifically water mains, contact the TSC Utility Coordinator and/or the Municipal Utility Unit in the Design Division in Lansing.

Round up the total estimated cost, for utility relocation work, on a project to the nearest $1000, before placing it into Trns•port.

Soils & Pavement Design

Region Soils Engineer

Consult the Region Soils Engineer for pavement design options to be estimated. The Region Soils Engineer may provide the proposed pay items which will make up the proposed pavement structure along with the estimated thicknesses of each layer. This estimated pavement structure is based on the proposed fix type, existing pavement information obtained from old plans, pavement cores, Average Daily Traffic (ADT) and pavement design guidelines published by MDOT. The Region Soils Engineer should also be aware of any potential peat excavation or contaminated soil within the project limits and may provide an estimate for the work necessary to deal with these situations.

In addition to providing the soil borings and/or pavement cores information, the Region Soils Engineer may provide quantities for specific soil needs (i.e. undercutting and etc). Consult the Region Soils Engineer for confirmation of the estimation for soil erosion and sedimentation control items.

need assistance from a "technical expert" in the area and the schedule for completing the scoping package. These meetings may be informal or formal; however the key is get and keep people involved in the scoping process. Projects should not be scoped by one person working in a vacuum. Multiple person teams bring diverse views and outlooks to the group and together can produce a stronger and well thought out proposed scope. Document such meetings, recommendations from specialty areas and other information where direction is decided or recommended. Invite FHWA for projects meeting the oversight requirements for 3R & 4R NHS.

Input From Other Disciplines

Gathering input from specialty areas or disciplines will make a scoping package more complete. Some of the specialty areas to look to for input, advice or guidance include: Traffic and Safety, Utilities, Surveys, Environmental, ROW, Hydraulics and etc. Construction or Delivery Staff is another discipline which may provide valuable input to the scoping process.

Documentation (revised 7-18-2016)

The importance of documenting all items discussed during the scoping process is beneficial so that items discussed and decided upon once do not get revisited later in the process; enables the designers to see why decision were made; reinforces the original scope which is connected to the programmed budget and etc.

Various tools for documenting are available. The Project Scoping Record form (Form#0591) is one alternative to recording the history of the scoping process from beginning to end and into the design phase.

Always Start Fresh

When beginning a scope or an estimate always start fresh. The use of old documents, estimates, spreadsheets or computations can result in errors, duplications or omissions. Unit prices often change, quantities are unique to a project and the pay items to include in a project may be unique to that project.

Go to the original source (often the MDOT website) to obtain the most current versions of checklists, spreadsheets, forms and other documents related to the scoping process.

List Your Assumptions

Document all assumptions made during the scoping process, whether it be an assumption about the deterioration rate of the road or structural element or the number of driveways that might require a Consent to Grade. Assumptions that are not documented can not be accounted for in the scoping process will need to be re-addressed later during the design process.