Road & Bridge Design Publications

Monthly Update – June 2016

Revisions for the month of **June** are listed and displayed below. New special details will be included in projects submitted for the **September** letting as is stated on the special detail index sheets. E-mail Scoping Manual or Road related questions to MDOT-Road-Design-Standards@michigan.gov.

Standard Plan Distribution

The distribution letter explaining the changes and the inserts used to keep a hard copy of the standard plan booklet up to date can be found at:

http://mdotcf.state.mi.us/public/design/files/englishstandardplans/files/standard_plan_distribution.pdf

The new standard plans have been placed on the website.

Special Details

R-1-G: Drainage Structures: For clarification, revised the note in the note section regarding the maximum allowable pipe diameters entering or exiting drainage structures.

R-61-H: Guardrail Approach Terminal Types 1B & 1T: Revised a few details on the X-Lite Flared Terminal. On sheet sixteen, revised the note on the "Back Slider Panel" such that a slot (instead of a hole) is used to connect to the post on the trailing side (instead of approach side). On sheet seventeen, posts 4, 5, & 6 were revised from standard line posts to "crimp posts" (proprietary).

Scoping Manual

Appendices: Removed the forms from Appendices A through G and replaced them with links.

Updates to MDOT Cell Library, Bridge Auto Draw Program, etc., may be required in tandem with some of this month's updates. Until such updates to automated tools can be made, it's the designer's/detailer's responsibility to manually incorporate any necessary revisions to notes and plan details to reflect these revisions.

Index to Special Details

6-20-2016

⑥

SPECIAL DETAIL NUMBER	NUMBER OF SHEETS	TITLE	CURRENT DATE
21	2	GUARDRAIL AT INTERSECTIONS	3-14-16
24	8	GUARDRAIL ANCHORED IN BACKSLOPE TYPES 4B, 4T, & 4MGS-8	4-25-16
99	2	CHAIN LINK FENCE WITH WIRE ROPE	9-22-14
*R-1-G	9	DRAINAGE STRUCTURES	6-15-16
R-28-J	7	SIDEWALK RAMP AND DETECTABLE WARNING DETAILS	3-15-16
R-53-A	22	TEMPORARY CONCRETE BARRIER LIMITED DEFLECTION	8-14-15
R-60-J	16	GUARDRAIL TYPES A, B, BD, T, TD, MGS-8, & MGS-8D	4-22-16
*R-61-H	19	GUARDRAIL APPROACH TERMINAL TYPES 1B & 1T (SKT, FLEAT, & X-Lite)	6-6-16
R-62-H	10	GUARDRAIL APPROACH TERMINAL TYPES 2B & 2T (SKT & X-Lite)	3-15-16
R-63-C	16	GUARDRAIL APPROACH TERMINAL TYPES 3B & 3T	3-15-16
R-66-E	4	GUARDRAIL DEPARTING TERMINAL TYPES B, T, & MGS	4-27-16
R-67-G	7	GUARDRAIL ANCHORAGE, BRIDGE, DETAILS	3-15-16
R-72-D	11	W-BEAM BACKED GUARDRAIL & GUARDRAIL LONG SPAN INSTALLATIONS	5-11-16
R-73-F	6	GUARDRAIL OVER BOX OR SLAB CULVERTS	3-15-16
R-83-C	5	UTILITY TRENCHES	2-8-16
R-126-I	5	PLACEMENT OF TEMPORARY CONCRETE & STEEL BARRIER	8-25-15

*** Denotes New or Revised Special Detail to be included in projects for (beginning with) the September letting.**

Note: Former Standard Plans IV-87, IV-89, IV-90, and IV-91 Series, used for building cast-in-place concrete head walls for elliptical and circular pipe culverts, are now being replaced with plans that detail each specific size. The Municipal Utilities Unit will provide these full sized special details for inclusion in construction plans for MDOT jobs. To assure prompt delivery, requests ***must*** be made in advance.

Former Standard Plans IV-93 and IV-94 series have been replaced with precast concrete box & three-sided culverts as per the 2012 Standard Specifications for Construction.

Index to Bridge Detail Sheets

6-20-2016

⑦

DETAIL NUMBER	NUMBER OF SHEETS	TITLE	CURRENT DATE
B-22-E	4	BRIDGE RAILING, THRIE BEAM RETROFIT (R4 TYPE RAILING)	3-15-16
B-23-F	4	BRIDGE RAILING, THRIE BEAM RETROFIT (OPEN PARAPET RAILING)	3-15-16
B-101-G	2	DRAIN CASTING ASSEMBLEY DETAILS	2-8-16
EJ3AB	1 or 2	EXPANSION JOINT DETAILS	2-10-16
EJ4O	1 or 2	EXPANSION JOINT DETAILS	2-10-16
PC-2G	1	70" PRESTRESSED CONCRETE I-BEAM DETAILS	3-31-06
PC-4E	1	PRESTRESSED CONCRETE 1800 BEAM DETAILS	3-31-06
PC-1L	1	PRESTRESSED CONCRETE I-BEAM DETAILS	7-12-06

*** Denotes New or Revised Special Detail to be included in projects for (beginning with) the September letting.**

Note: Details EJ3AA & EJ4N are interactive, i.e. designers and detailers choose details based upon railing type and angle of crossing. Place all details appropriate for the project, structure specific information, and the Expansion Joint Device quantity on the sheet. The sheet shall then be added to the plans as a normal plan sheet.

Detail PC-1L, PC-2G and PC-4E shall have structure specific information and quantities added to the sheet. The sheet shall then be added to the plans as a normal plan sheet.

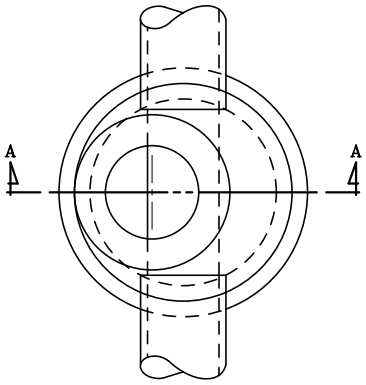

PLAN VIEW

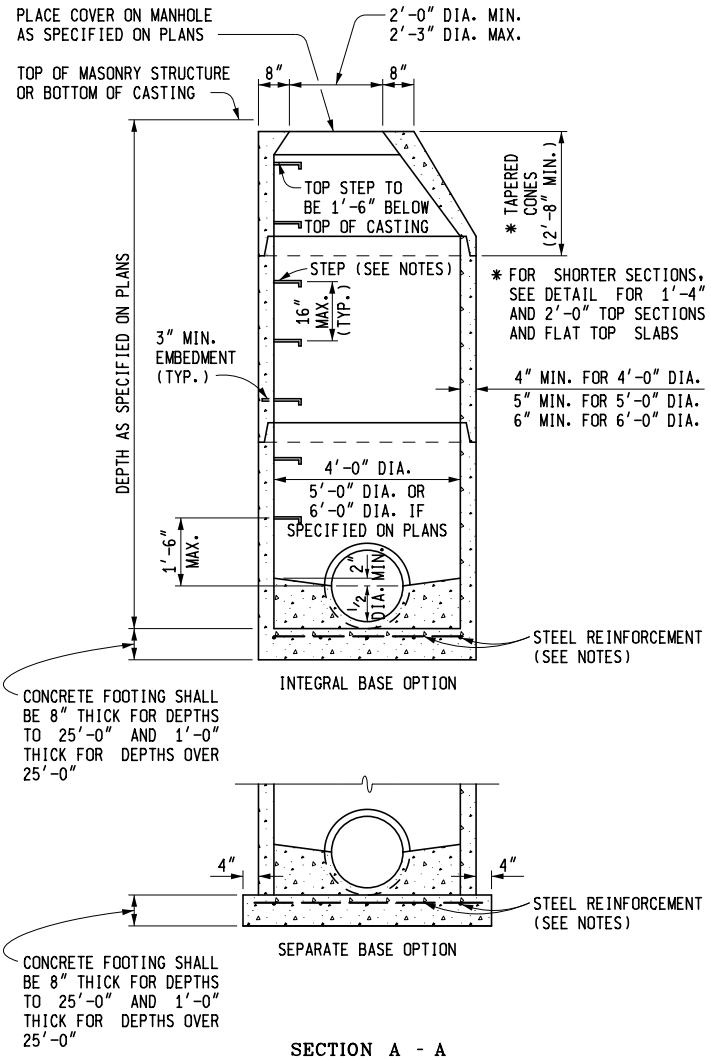

SECTION A - A

TYPICAL MANHOLE

PRECAST REINFORCED CONCRETE SHOWN
OTHER OPTIONS INCLUDE CONCRETE BLOCK, BRICK, OR CAST-IN-PLACE WALL SECTIONS
SEE TYPICAL WALL SECTIONS FOR WALL THICKNESS

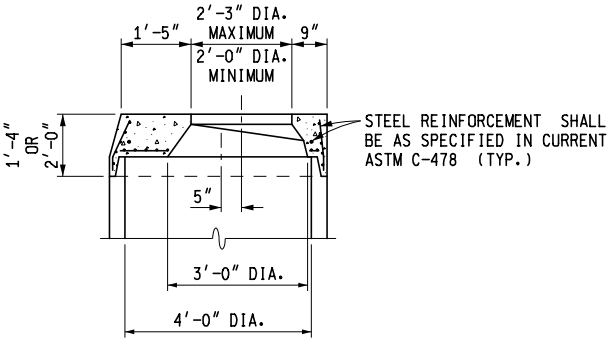

DETAIL FOR 1'-4" & 2'-0" TOP SECTIONS

SHAPE MAY VARY FROM DETAIL SHOWN BUT MUST COMPLY WITH ASTM C-478 AND JOINTS SHALL BE COMPATIBLE WITH THE RISER

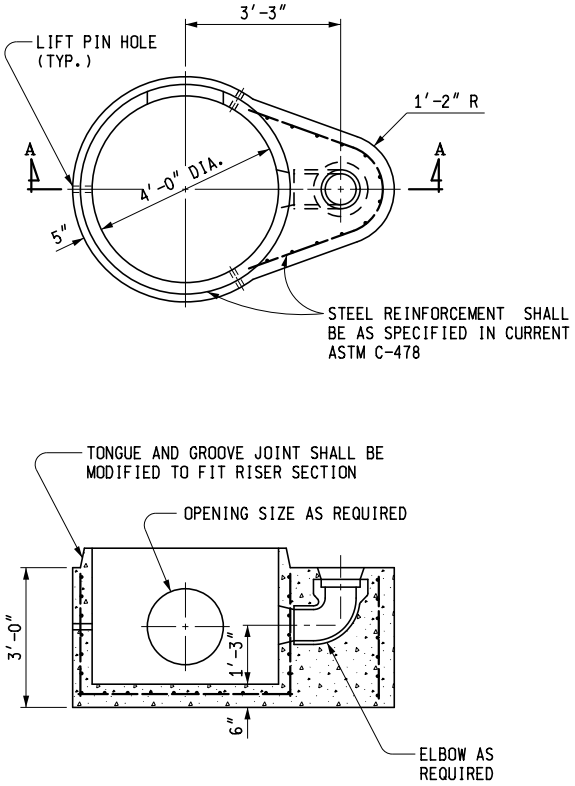

SECTION A - A

TYPICAL PRECAST REINFORCED BOTTOM SECTION FOR DROP MANHOLE

MDOT Michigan Department of Transportation

PREPARED BY DESIGN DIVISION

DRAWN BY: B.L.T.

CHECKED BY: W.K.P.

DEPARTMENT DIRECTOR
Kirk T. Steudle

APPROVED BY: _____
DIRECTOR, BUREAU OF FIELD SERVICES

APPROVED BY: _____
DIRECTOR, BUREAU OF DEVELOPMENT

MICHIGAN DEPARTMENT OF TRANSPORTATION
BUREAU OF DEVELOPMENT STANDARD PLAN FOR

DRAINAGE STRUCTURES

F.H.W.A. APPROVAL	6-15-2016 PLAN DATE	R-1-G	SHEET 1 OF 9

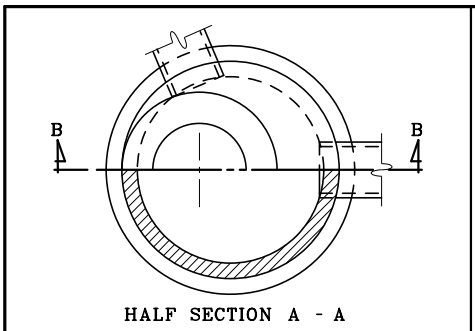

SEE MANHOLE DETAILS FOR SIZE AND BASE OPTIONS

SECTION B - B

INLET

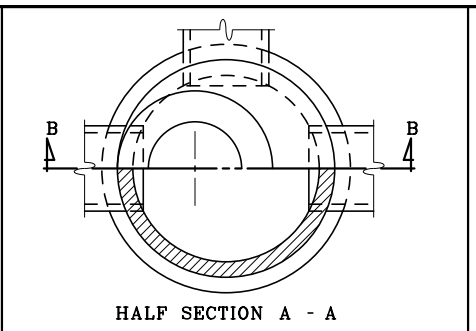

SEE MANHOLE DETAILS FOR SIZE AND BASE OPTIONS

SECTION B - B

CATCH BASIN

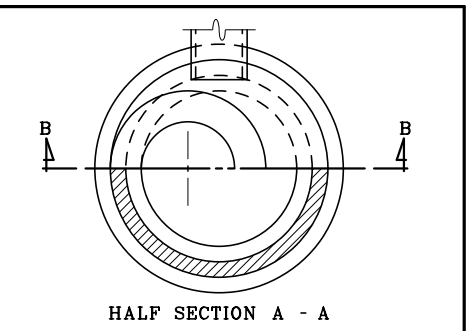

SEE MANHOLE DETAILS FOR BASE OPTIONS

SECTION B - B

LEACHING BASIN

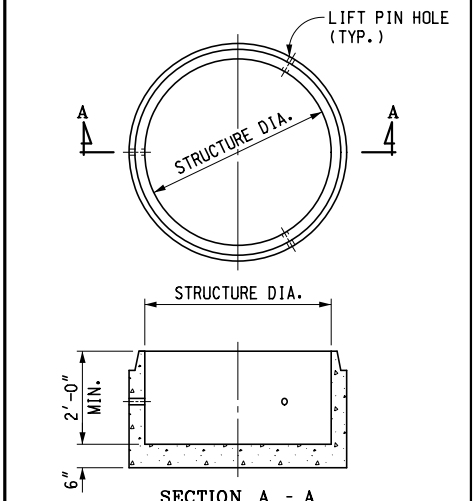

SECTION A - A

SEE MANHOLE DETAILS FOR SIZE AND BASE OPTIONS

PRECAST SUMP FOR PRECAST RISERS

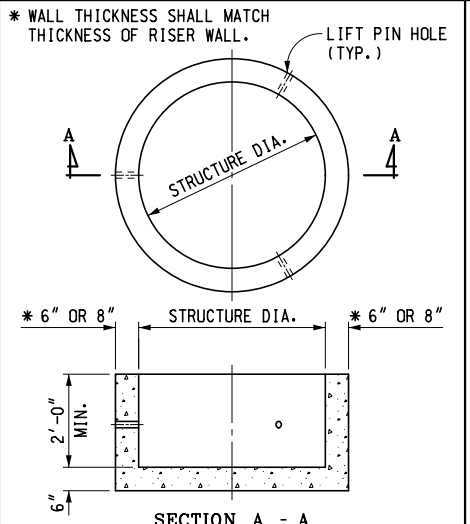

SECTION A - A

SEE TYPICAL BRICK AND BLOCK SECTION FOR SIZE AND BASE OPTIONS

PRECAST SUMP FOR BRICK OR BLOCK CONSTRUCTION

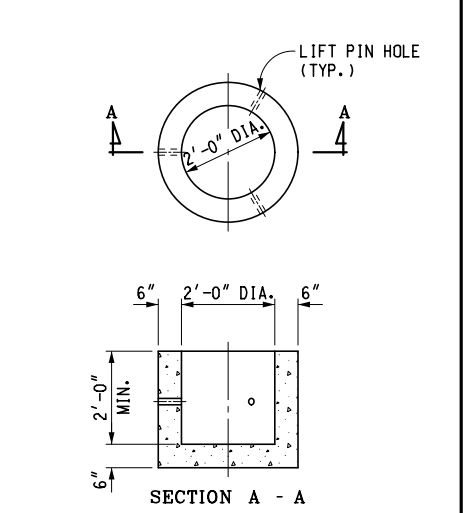

SECTION A - A

PRECAST SUMP FOR 2'-0" DIA. STRUCTURES

MICHIGAN DEPARTMENT OF TRANSPORTATION

BUREAU OF DEVELOPMENT STANDARD PLAN FOR

DRAINAGE STRUCTURES

F.H.W.A. APPROVAL	6-15-2016 PLAN DATE	R-1-G	SHEET 2 OF 9

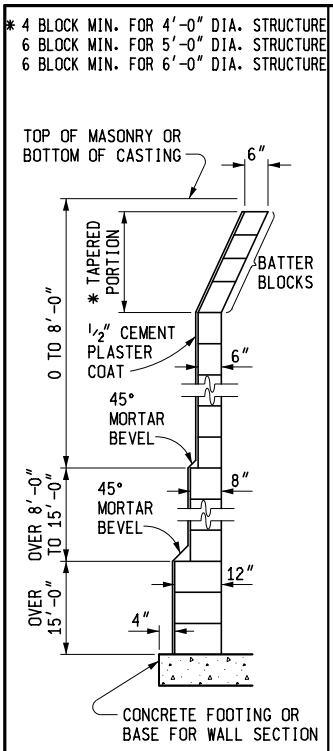

TYPICAL CONCRETE BLOCK WALL SECTION

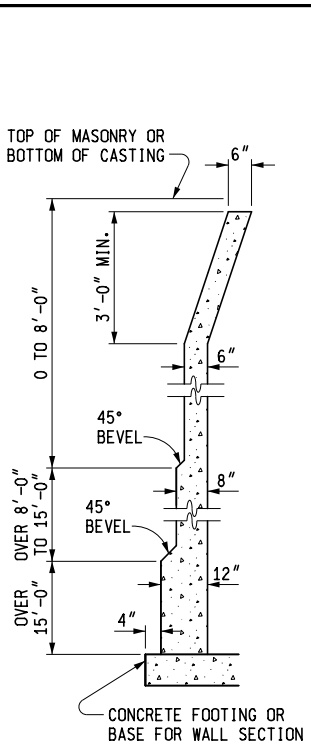

TYPICAL CAST-IN-PLACE CONCRETE WALL SECTION

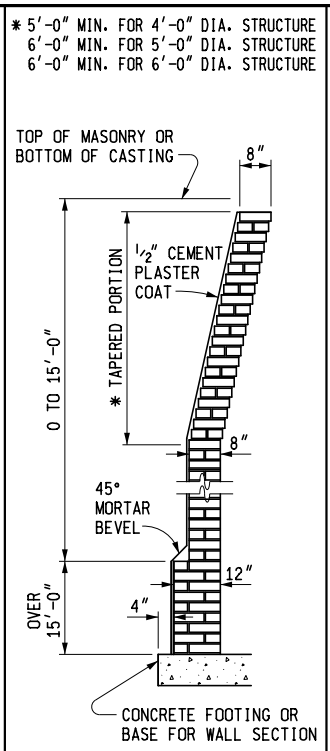

TYPICAL BRICK WALL SECTION

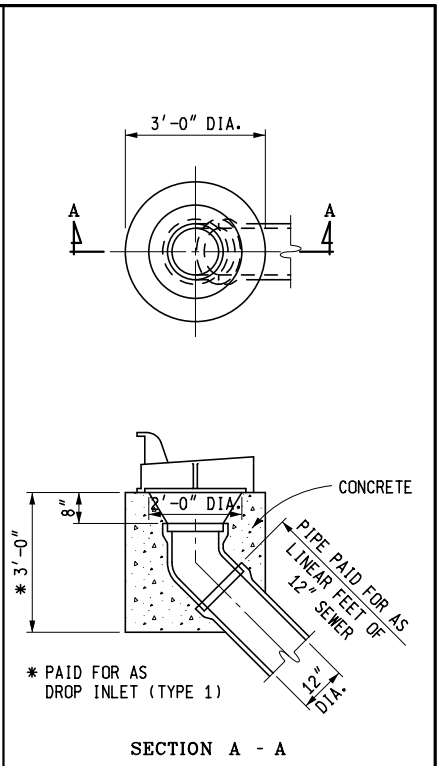

DROP INLET (TYPE 1)

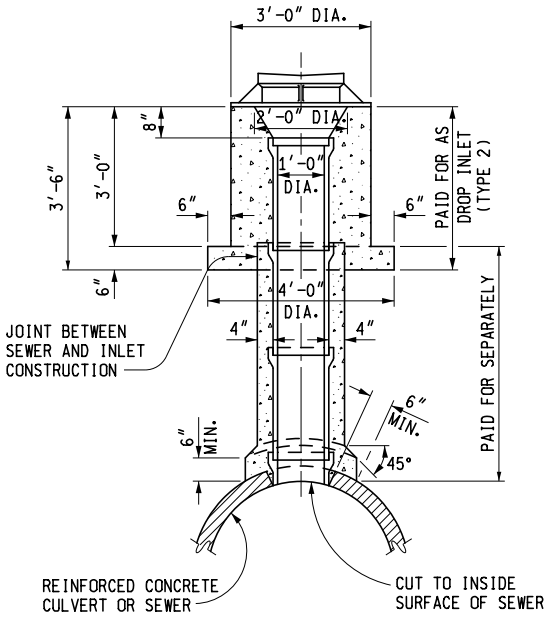

BACKFILL SHALL BE PLACED TO BOTTOM OF INLET AND COMPACTED BEFORE CONSTRUCTING THE INLET

DROP INLET (TYPE 2)

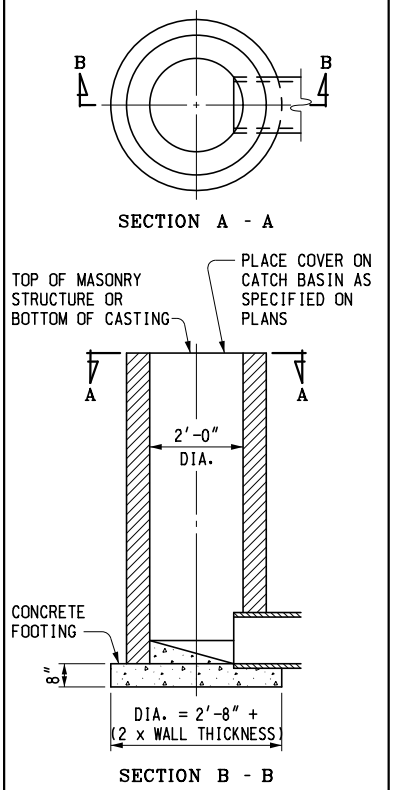

INLET

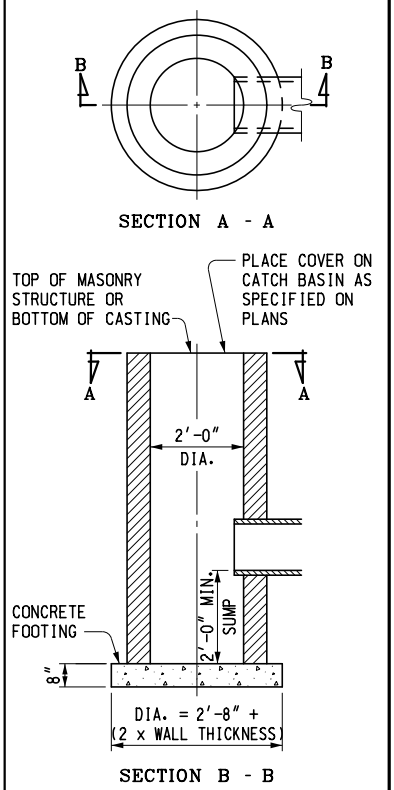

CATCH BASIN

MICHIGAN DEPARTMENT OF TRANSPORTATION
BUREAU OF DEVELOPMENT STANDARD PLAN FOR

DRAINAGE STRUCTURES

F.H.W.A. APPROVAL	6-15-2016 PLAN DATE	R-1-G	SHEET 3 OF 9

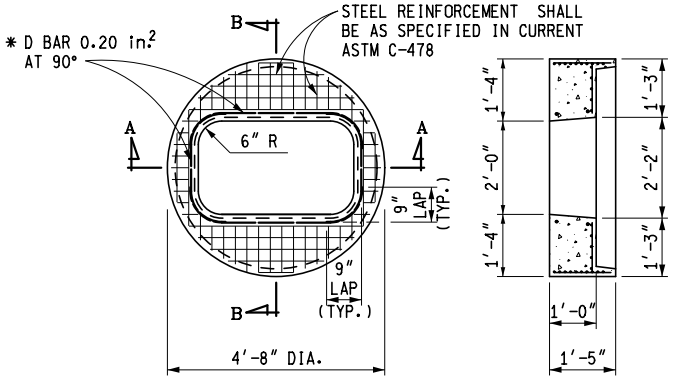

SECTION B - B

* D BARS MAY BE BENT AT A SMALLER RADIUS RATHER THAN PARALLELING THE RADIUS IN THE DRAIN OPENING

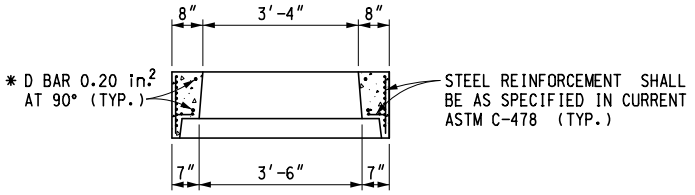

SECTION A - A

PRECAST FLAT SLAB TOP FOR PRECAST CONCRETE STRUCTURE, 2' x 4' CASTING

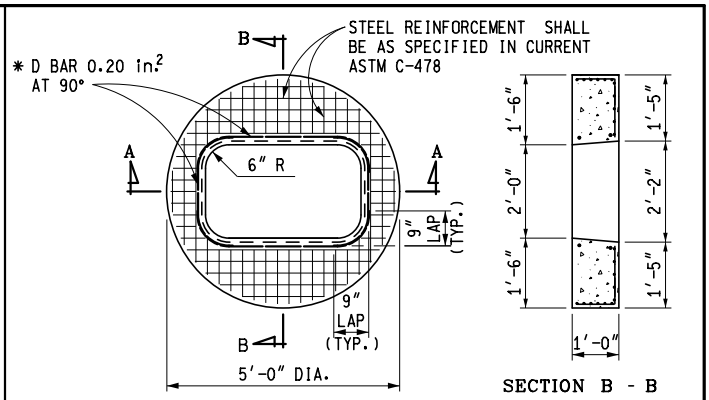

SECTION B - B

* D BARS MAY BE BENT AT A SMALLER RADIUS RATHER THAN PARALLELING THE RADIUS IN THE DRAIN OPENING

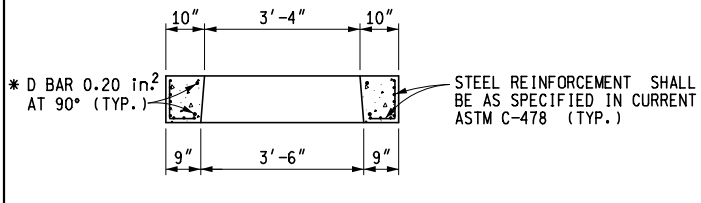

SECTION A - A

PRECAST FLAT SLAB TOP FOR MASONRY STRUCTURE, 2' x 4' CASTING

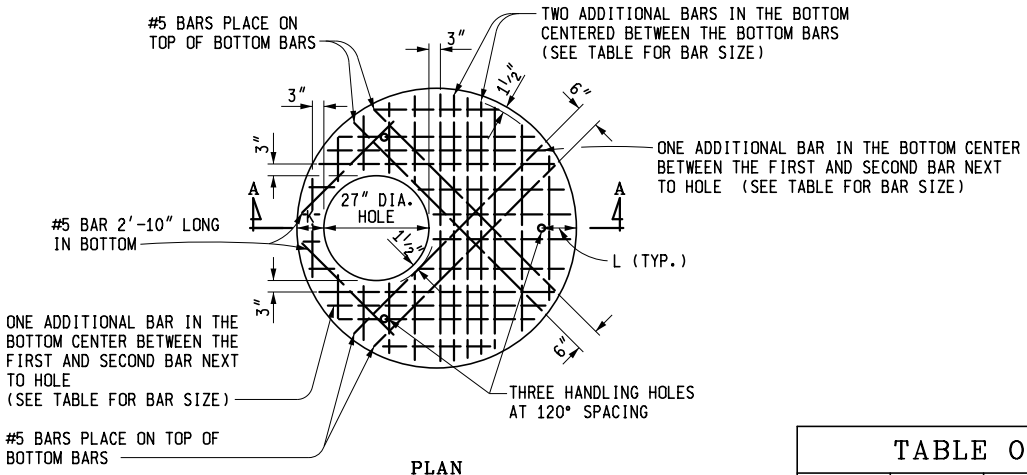

PLAN
(SHOWING BOTTOM LAYER OF REINFORCEMENT)

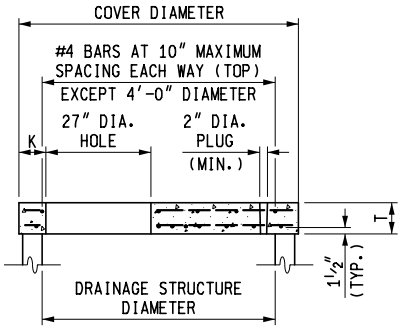

SECTION A - A

TABLE OF DIMENSIONS					
STRUCTURE DIAMETER	COVER DIAMETER	T	K	L	BAR MAXIMUM SPACING (BOTTOM EACH WAY)
* 4'-0"	58"	6"	6"	8"	#5 AT 6"
5'-0"	72"	8"	7"	9"	#5 AT 7"
6'-0"	86"	8"	8"	10"	#5 AT 6"
7'-0"	101½"	12"	8¾"	11"	#5 AT 5"
8'-0"	114"	12"	9"	11"	#6 AT 6"
9'-0"	128"	12"	10"	12"	#5 AT 6"
10'-0"	140"	12"	10"	13"	#5 AT 6"

* ONLY BOTTOM LAYERS OF STEEL NECESSARY

PRECAST REINFORCED CONCRETE FLAT SLAB TOP

MICHIGAN DEPARTMENT OF TRANSPORTATION
BUREAU OF DEVELOPMENT STANDARD PLAN FOR

DRAINAGE STRUCTURES

F.H.W.A. APPROVAL	6-15-2016 PLAN DATE	R-1-G	SHEET 4 OF 9

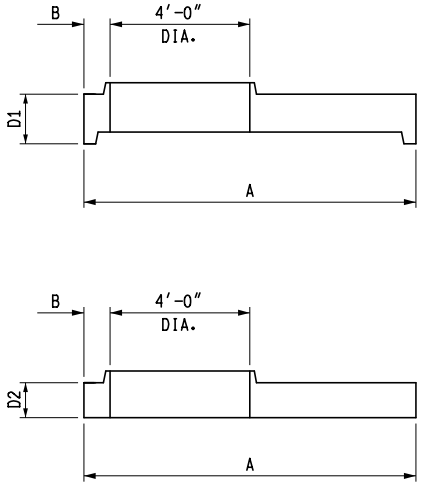

PRECAST REDUCER CAP

REDUCER CAP DIMENSIONS				
STRUCTURE DIAMETER	CAP DIAMETER "A"	B	CAP DEPTH "D1"	CAP DEPTH "D2"
7′-0″	101½″	8¾″	1′-5″	12″
8′-0″	114″	9″	1′-5″	12″
9′-0″	128″	10″	1′-5″	12″
10′-0″	140″	10″	1′-6″	12″

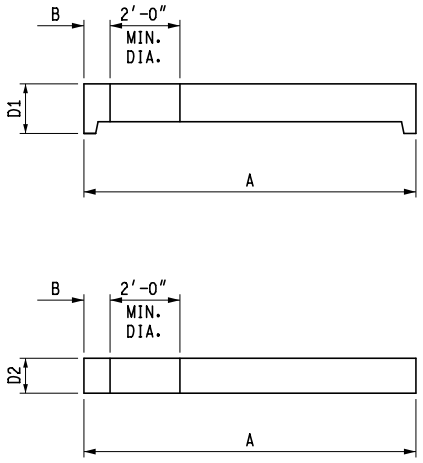

PRECAST FLAT SLAB TOP

FLAT SLAB TOP DIMENSIONS				
STRUCTURE DIAMETER	COVER DIAMETER "A"	B	COVER DEPTH "D1"	COVER DEPTH "D2"
7′-0″	101½″	8¾″	1′-5″	12″
8′-0″	114″	9″	1′-5″	12″
9′-0″	128″	10″	1′-5″	12″
10′-0″	140″	10″	1′-6″	12″

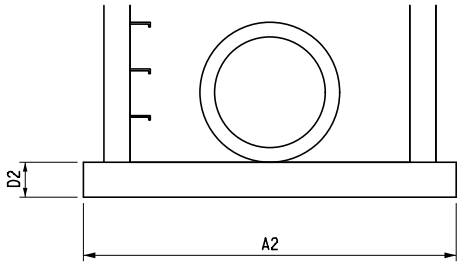

SEPARATE BASE OPTION

BASE AND RISER DIMENSIONS					
STRUCTURE DIAMETER	BASE DIAMETER "A1"	BASE DIAMETER "A2"	MIN. WALL THICKNESS "T"	BASE DEPTH "D1"	BASE DEPTH "D2"
7′-0″	101½″	108″	7″	8″	12″
8′-0″	114″	128″	8″	8″	12″
9′-0″	128″	140″	9″	8″	12″
10′-0″	140″	154″	10″	8″	12″

MICHIGAN DEPARTMENT OF TRANSPORTATION
BUREAU OF DEVELOPMENT STANDARD PLAN FOR

DRAINAGE STRUCTURES

F.H.W.A. APPROVAL	6-15-2016 PLAN DATE	R-1-G	SHEET 5 OF 9

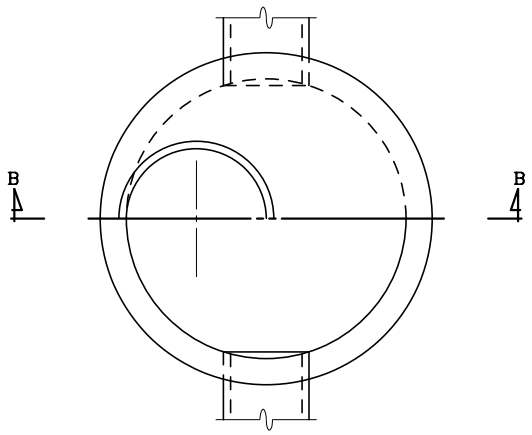

HALF SECTION A - A

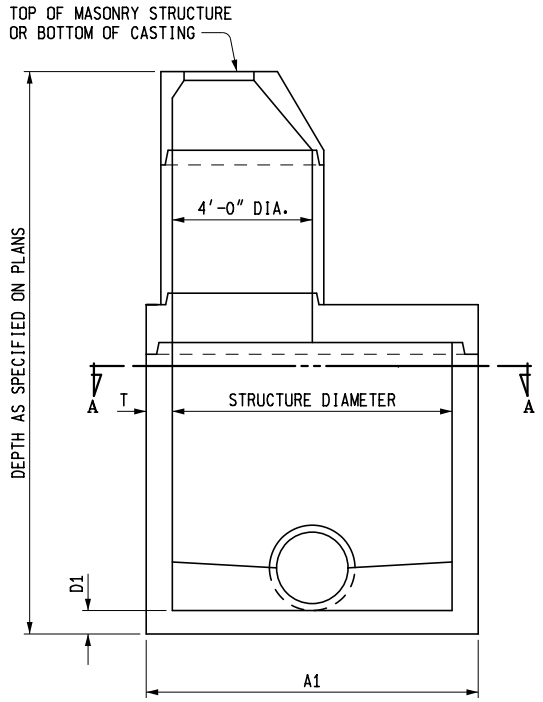

SECTION B - B
SHOWING REDUCER CAP

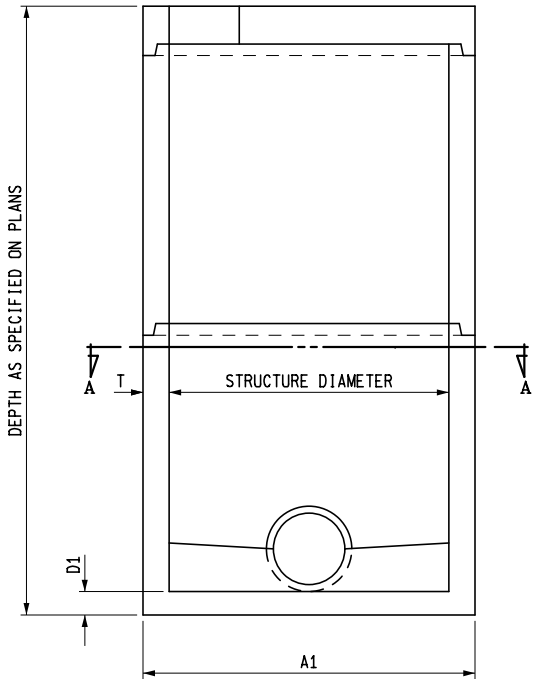

SECTION B - B
SHOWING FLAT SLAB TOP

PRECAST MANHOLE

MICHIGAN DEPARTMENT OF TRANSPORTATION
BUREAU OF DEVELOPMENT STANDARD PLAN FOR

DRAINAGE STRUCTURES

F.H.W.A. APPROVAL	6-15-2016 PLAN DATE	R-1-G	SHEET 6 OF 9

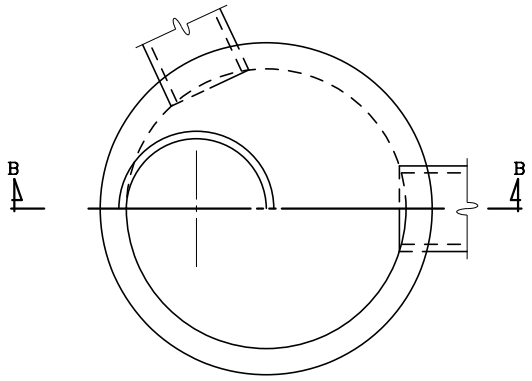

HALF SECTION A - A

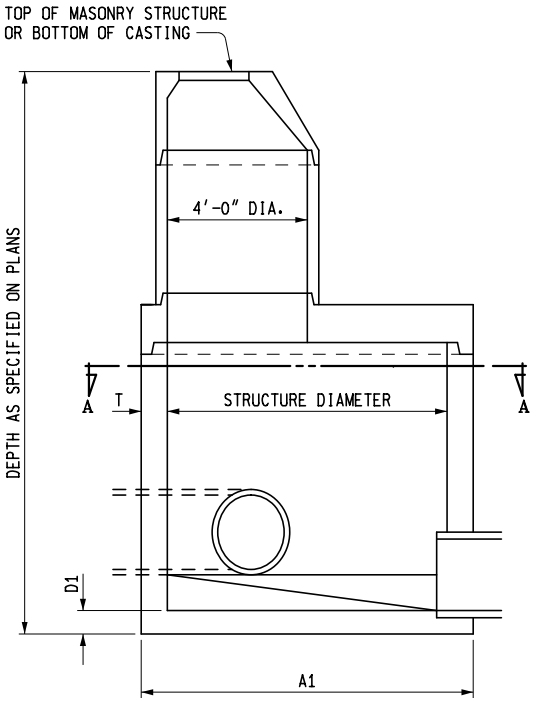

SECTION B - B
SHOWING REDUCER CAP

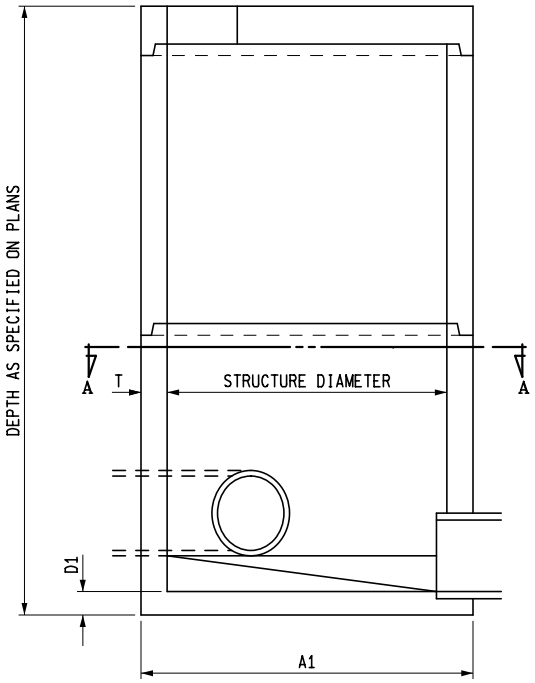

SECTION B - B
SHOWING FLAT SLAB TOP

PRECAST INLET

MICHIGAN DEPARTMENT OF TRANSPORTATION
BUREAU OF DEVELOPMENT STANDARD PLAN FOR

DRAINAGE STRUCTURES

F.H.W.A. APPROVAL	6-15-2016 PLAN DATE	R-1-G	SHEET 7 OF 9

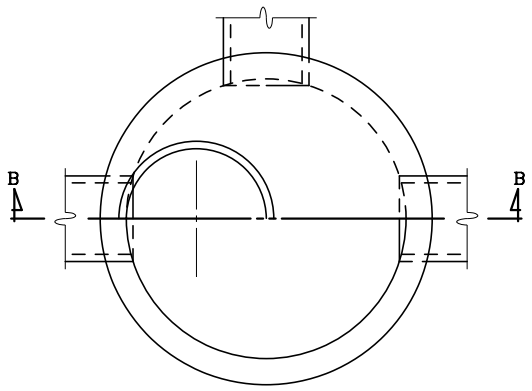

HALF SECTION A - A

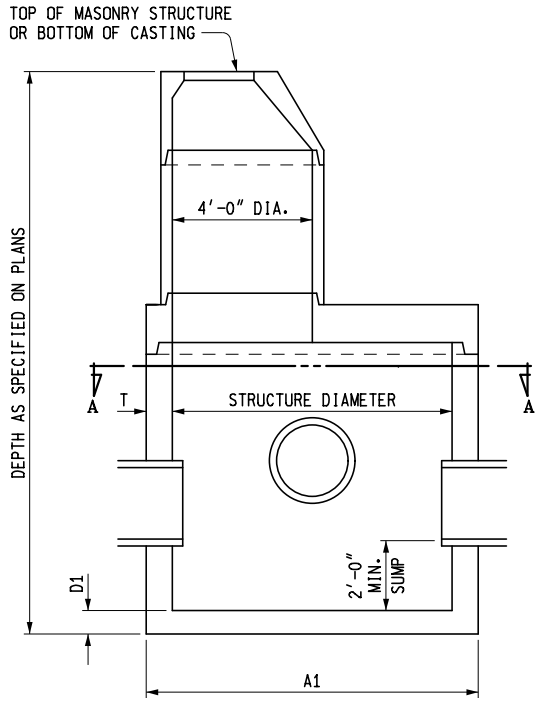

SECTION B - B
SHOWING REDUCER CAP

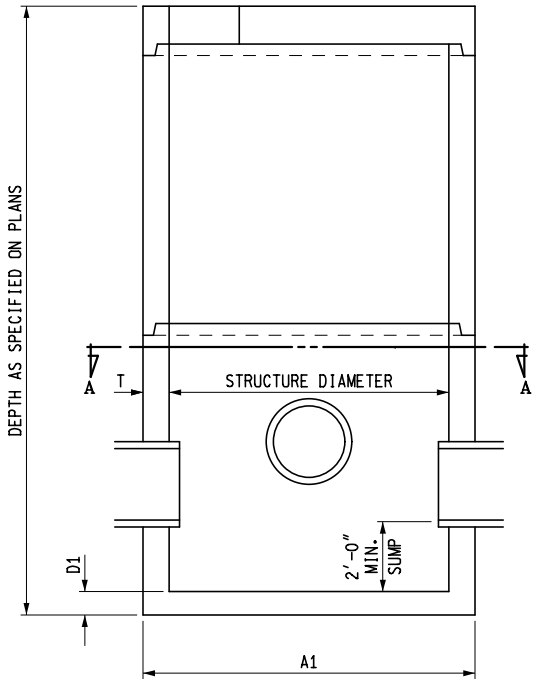

SECTION B - B
SHOWING FLAT SLAB TOP

PRECAST CATCH BASIN

MICHIGAN DEPARTMENT OF TRANSPORTATION
BUREAU OF DEVELOPMENT STANDARD PLAN FOR

DRAINAGE STRUCTURES

F.H.W.A. APPROVAL	6-15-2016 PLAN DATE	R-1-G	SHEET 8 OF 9

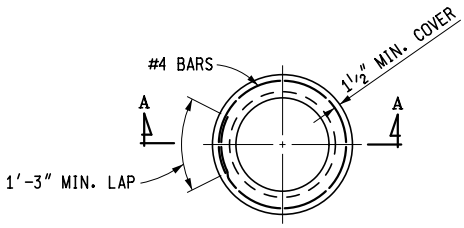

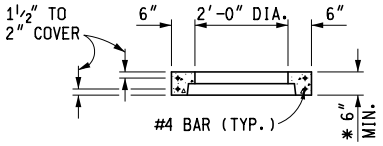

SECTION A - A

* WHEN RISER TONGUE LENGTH IS GREATER THAN 3", USE 2 TIMES THE TONGUE LENGTH.

NOTE: PRECAST RISER SHALL FULLY ENGAGE THE TONGUE OF THE RISER PIPE.

PRECAST RISER RING

(FOR 2'-0" DIAMETER STRUCTURE)

NOTES:

THE DRAINAGE STRUCTURE COVERS ALLOWED FOR USE ON THESE DRAINAGE STRUCTURES ARE SPECIFIED IN SUBSEQUENT STANDARD PLANS AND ARE INTERCHANGEABLE ON ANY STRUCTURE.

THE TOPS OF MASONRY STRUCTURES SHALL BE SUFFICIENTLY LOW TO PERMIT PROPER ADJUSTMENT OF COVER TO GRADE USING MORTAR OR BRICK AS DIRECTED BY THE ENGINEER.

PREMIUM JOINTS ARE REQUIRED ON ALL SANITARY MANHOLES. SEE ASTM DESIGNATION C-923.

GRANULAR MATERIAL CLASS III SHALL BE USED IN BACKFILLING AROUND ALL STRUCTURES THAT FALL WITHIN THE 1:1 INFLUENCE LINES FROM THE EDGE OF PAVEMENT OR BACK OF CURB.

STEPS FOR DRAINAGE STRUCTURES SHALL BE OF AN APPROVED DESIGN AND MADE FROM CAST IRON, ALUMINUM, OR PLASTIC COATED STEEL. RUNGS SHALL BE A MINIMUM OF 10" IN CLEAR LENGTH, DESIGNED TO PREVENT THE FOOT FROM SLIPPING OFF THE END. THE MINIMUM HORIZONTAL PULL OUT LOAD SHALL BE 400 LBS. THE MINIMUM VERTICAL LOAD SHALL BE 800 LBS.

THE BELL SHALL BE REMOVED FOR THE FIRST LENGTH OF OUTLET PIPE PROJECTING THROUGH THE WALL OF THE MANHOLE.

PRECAST CONCRETE SECTIONS, SUMPS, AND FLAT TOP SLABS SHALL BE BUILT ACCORDING TO CURRENT ASTM C-478 AND ACCORDING TO DETAILS SPECIFIED ON THIS PLAN. PRECAST REINFORCED CONCRETE FLAT TOP SLAB SHALL BE MARKED TO SHOW LOCATION OF REINFORCEMENT. THE WALLS OF THE PRECAST UNITS MAY HAVE A SLIGHT TAPER TO ALLOW FOR FORM REMOVAL. PRECAST CONCRETE 2'-0" DIAMETER DRAINAGE STRUCTURES SHALL HAVE A MINIMUM 3" WALL THICKNESS WITH A 6" MINIMUM BEARING SURFACE ON TOP. SEE PRECAST RISER RING FOR 2'-0" DIAMETER STRUCTURE.

THE MAXIMUM INSIDE DIAMETER OF PIPES ENTERING OR LEAVING PRECAST DRAINAGE STRUCTURES SHALL BE 2'-0" LESS THAN THE INSIDE DIAMETER OF THE DRAINAGE STRUCTURE. A PIPE LEAVING A 2'-0" DIAMETER DRAINAGE STRUCTURE IS ALLOWED TO HAVE 1'-0" INSIDE DIAMETER OR LESS.

THE NUMBER OF PIPE OPENINGS IN A RISER SHALL BE DETERMINED BY THE DESIGNER. SPACING BETWEEN OPENINGS SHALL BE 1'-0" MINIMUM. OPENINGS MAY BE CONSTRUCTED BY CASTING OR SCRIBING IN PRECAST STRUCTURES DURING FABRICATION OR BY CORING THE CURED CONCRETE.

PRECAST CONCRETE FOOTINGS OR BASES SHALL BE REINFORCED WITH #4 BARS SPACED AT 1'-0" BOTH WAYS OR WITH TWO LAYERS OF WELDED WIRE FABRIC OF EQUIVALENT CROSS SECTIONAL AREA LAID AT RIGHT ANGLES AND WIRED TOGETHER. REINFORCEMENT SHALL BE PLACED IN TOP OF FOOTING AND SHALL BE MARKED.

PRECAST CONCRETE FOOTINGS SHALL BE SUPPORTED BY A COMPACTED 6" GRANULAR SUBBASE.

THE MINIMUM WALL THICKNESS FOR ALL 2'-0", 4'-0", 5'-0", AND 6'-0" DRAINAGE STRUCTURES USING CONCRETE BLOCK, BRICK, OR CAST-IN-PLACE CONCRETE SHALL BE AS SPECIFIED IN TYPICAL WALL SECTIONS.

THE CONICAL SECTION OF MANHOLES OR CATCH BASINS CONSTRUCTED OF BLOCK OR BRICK SHALL BE SHROUDED WITH GEOTEXTILE FABRIC TO A MINIMUM DEPTH OF 5'-0" OR THROUGH THE FROST ZONE. ENOUGH GEOTEXTILE MATERIAL SHALL BE LEFT ON THE TOP (8" OR MORE) TO ROLL OVER THE TOP OF THE CONE.

PREFORMED HIGH DENSITY POLYSTYRENE FILLER PIECES MAY BE USED TO CHANNEL FLOW IN THE BOTTOM OF MANHOLES PROVIDED THEY HAVE AT LEAST 2" OF CONCRETE COVER. THE USE OF THIS MATERIAL FOR CHANNEL FLOW IS RESTRICTED TO MANHOLES WHERE THE BOTTOM SECTION IS NOT SUBJECT TO FREEZING. THE USE OF THIS MATERIAL MUST BE APPROVED BY THE ENGINEER.

MICHIGAN DEPARTMENT OF TRANSPORTATION
BUREAU OF DEVELOPMENT STANDARD PLAN FOR

DRAINAGE STRUCTURES

F.H.W.A. APPROVAL	6-15-2016 PLAN DATE	R-1-G	SHEET 9 OF 9

POST	** POST OFFSET DISTANCE	
1	4.0′	48″
2	2.8′	33½″
3	1.8′	21¼″
4	1.2′	14¾″
5	0.8′	9½″
6	0.45′	5⅜″
7	0.2′	2⅜″
8	0.05′	⅝″
9	0′	0″

THE POST OFFSET DIMENSIONS ARE GIVEN TO THE CENTER OF THE TRAFFIC FACE OF THE WOOD OFFSET BLOCKS, EXCEPT FOR THE FIRST AND SECOND POSTS WHICH ARE GIVEN TO THE CENTER OF THE TRAFFIC FACE OF THE POST. OFFSET POINTS ARE TO BE LOCATED BY CHORD MEASUREMENTS AT THE BACK OF THE RAIL EQUAL TO THE NOMINAL POST SPACINGS SPECIFIED. POSTS ARE TO BE SET APPROXIMATELY TANGENT TO THE BEAM ELEMENT AT EACH POST LOCATION.

** FOR LAYOUT ON CURVES SEE DETAIL ON SHEET 18.

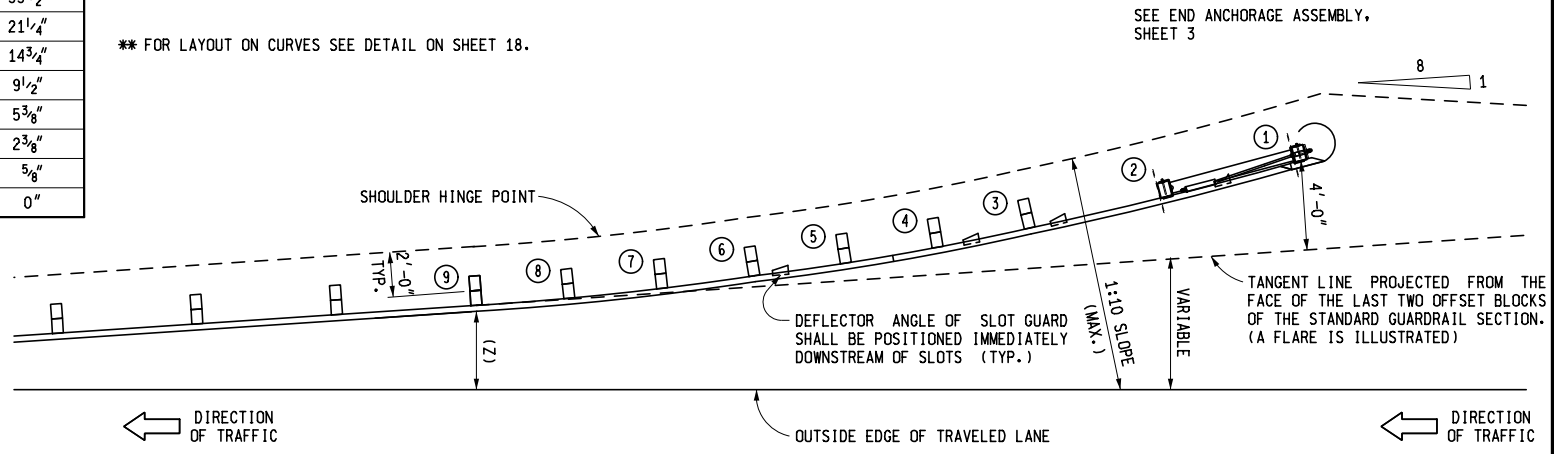

PLAN VIEW

* SEE STANDARD PLAN R-60-SERIES FOR POST SPACING AND GUARDRAIL LAYOUT TO TRANSITION FROM GUARDRAIL, TYPE MGS-8 TO GUARDRAIL APPROACH TERMINAL TYPE 1B

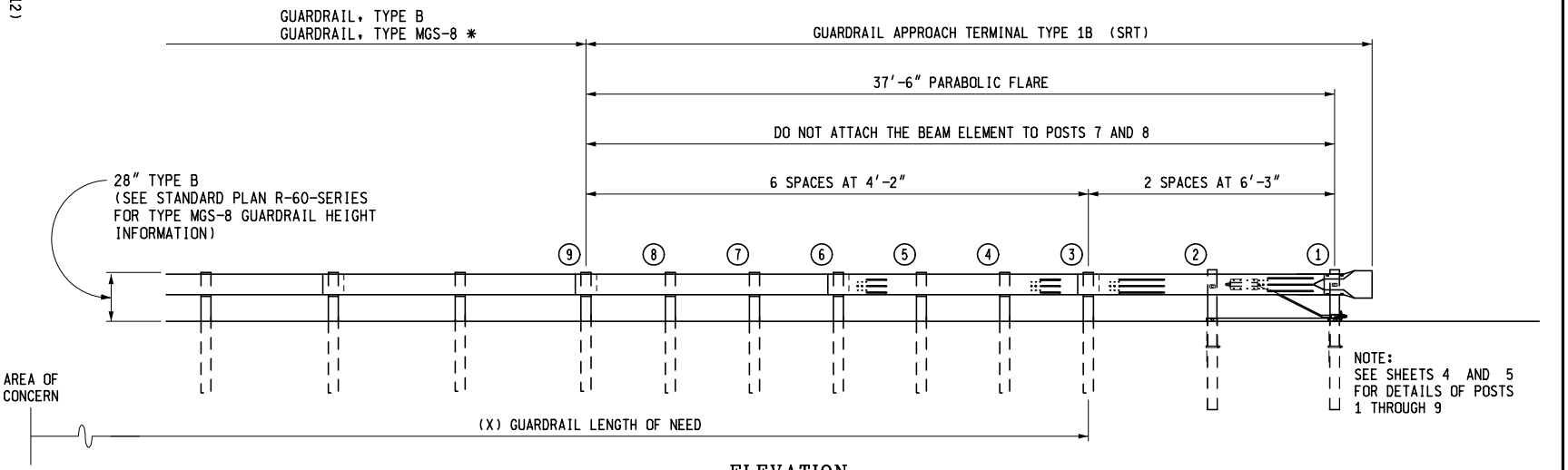

ELEVATION

GUARDRAIL APPROACH TERMINAL TYPE 1B
"SRT"

OPTION 1
(DETAILED ON SHEETS 1 THROUGH 6, 11 AND 12)

MICHIGAN DEPARTMENT OF TRANSPORTATION
BUREAU OF DEVELOPMENT STANDARD PLAN FOR

GUARDRAIL APPROACH TERMINAL TYPES 1B & 1T (SRT, FLEAT & X-LITE-FLARED)

R-61-H

SHEET 1 OF 19

6-6-2016
PLAN DATE

F.H.W.A. APPROVAL

APPROVED BY: ENGINEER OF DEVELOPMENT

APPROVED BY: ENGINEER OF DELIVERY

DEPARTMENT DIRECTOR
Kirk T. Steudle

PREPARED BY DESIGN DIVISION

DRAWN BY: B.L.T.
CHECKED BY: W.K.P.

MDOT Michigan Department of Transportation

POST	** POST OFFSET DISTANCE	
1	4.0′	48″
2	2.8′	33½″
3	1.8′	21¼″
4	1.2′	14¾″
5	0.8′	9½″
6	0.45′	5⅜″
7	0.2′	2⅜″
8	0.05′	⅝″
9	0′	0″

THE POST OFFSET DIMENSIONS ARE GIVEN TO THE CENTER OF THE TRAFFIC FACE OF THE WOOD OFFSET BLOCKS, EXCEPT FOR THE FIRST AND SECOND POSTS WHICH ARE GIVEN TO THE CENTER OF THE TRAFFIC FACE OF THE POST. OFFSET POINTS ARE TO BE LOCATED BY CHORD MEASUREMENTS AT THE BACK OF THE RAIL EQUAL TO THE NOMINAL POST SPACINGS SPECIFIED. POSTS ARE TO BE SET APPROXIMATELY TANGENT TO THE BEAM ELEMENT AT EACH POST LOCATION.

** FOR LAYOUT ON CURVES SEE DETAIL ON SHEET 18.

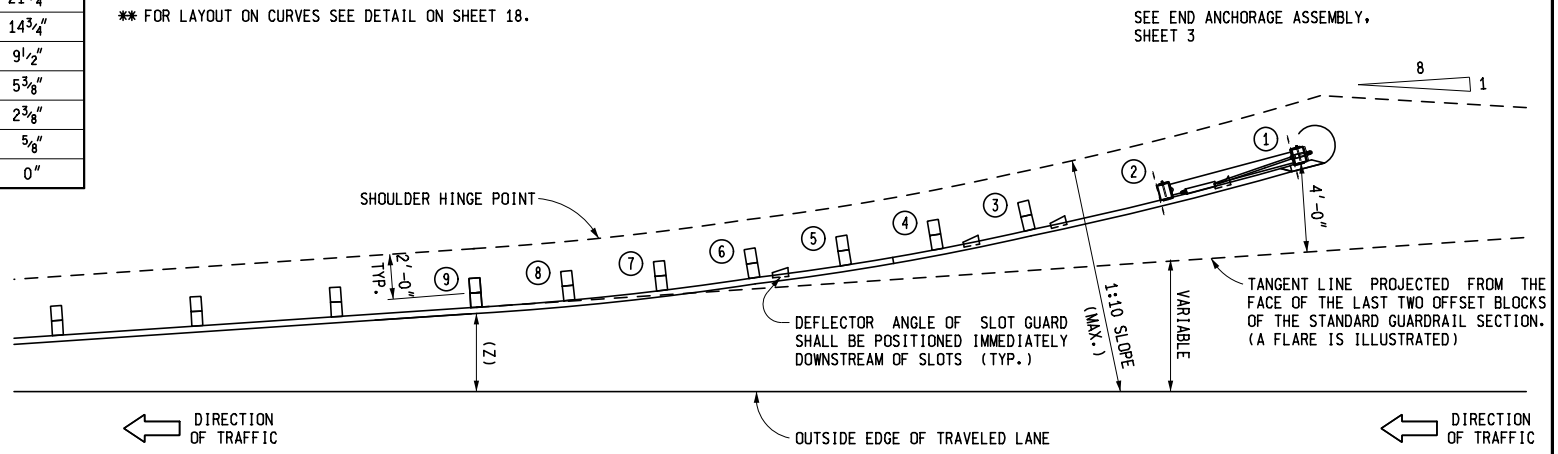

PLAN VIEW

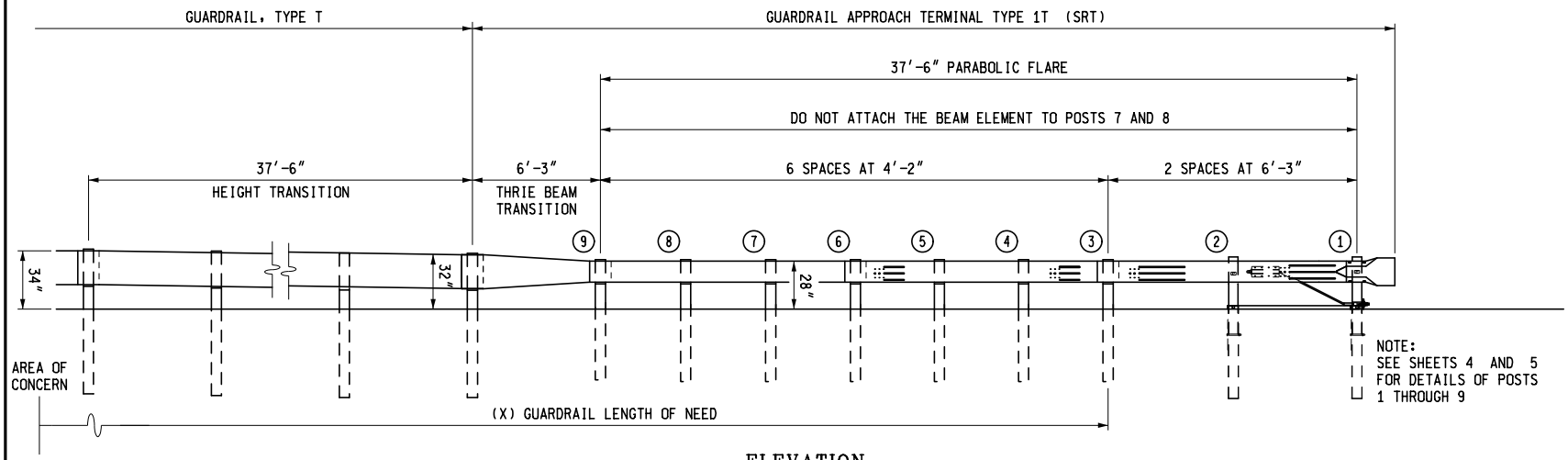

ELEVATION

GUARDRAIL APPROACH TERMINAL TYPE 1T
"SRT"

MICHIGAN DEPARTMENT OF TRANSPORTATION
BUREAU OF DEVELOPMENT STANDARD PLAN FOR

GUARDRAIL APPROACH TERMINAL TYPES 1B & 1T (SRT, FLEAT & X-LITE-FLARED)

F.H.W.A. APPROVAL

6-6-2016
PLAN DATE

R-61-H

SHEET 2 OF 19

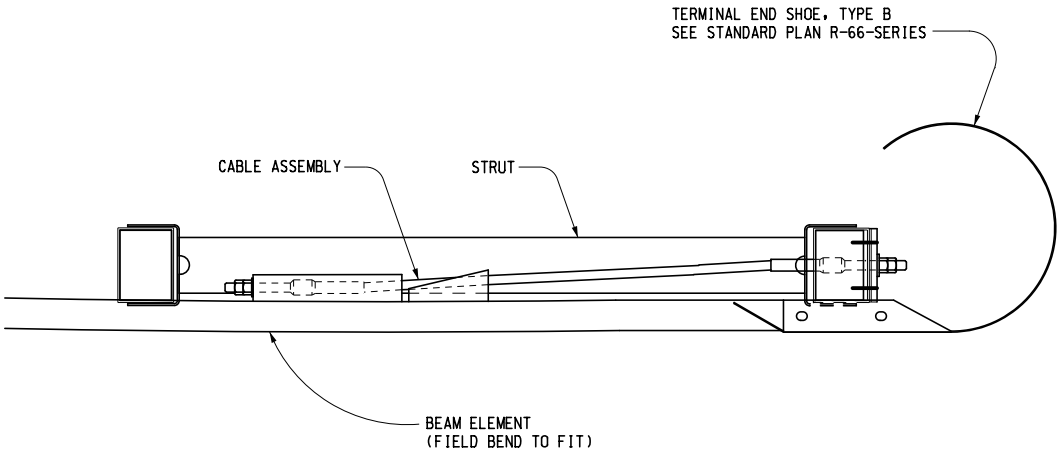

PLAN VIEW

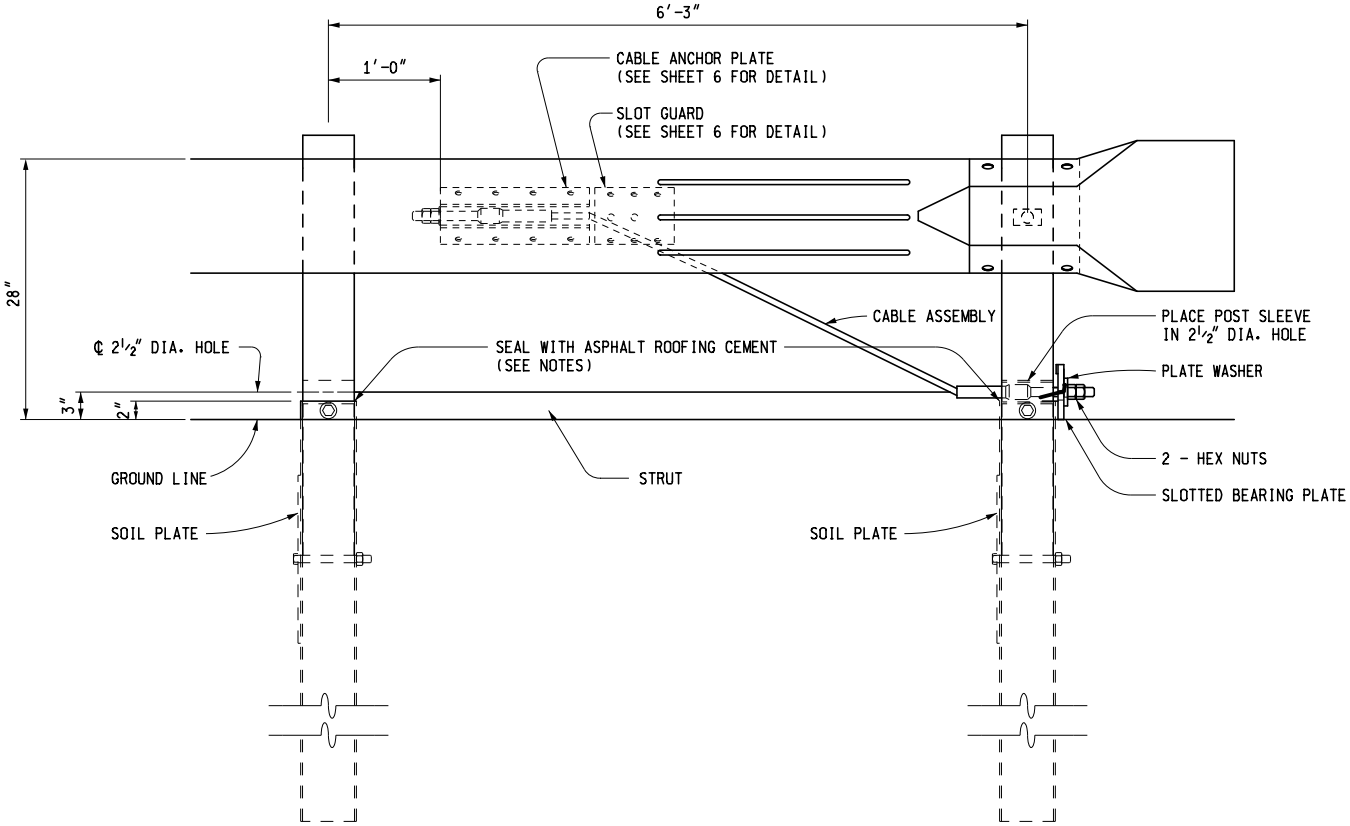

ELEVATION

END ANCHORAGE ASSEMBLY
(SRT)

NOTES:

DETAILS ON THIS SHEET ONLY APPLY TO "SRT".

AFTER THE CABLE ASSEMBLY HAS BEEN TIGHTENED, A SECOND NUT SHALL BE INSTALLED ON EACH END OF THE CABLE SO THAT THE CABLE WILL NOT LOOSEN.

ASPHALT ROOFING CEMENT SHALL BE USED TO SEAL THE PERIMETER AREA BETWEEN THE STEEL SLEEVE (SOIL TUBE) AND THE WOOD BREAKAWAY POST.

MICHIGAN DEPARTMENT OF TRANSPORTATION
BUREAU OF DEVELOPMENT STANDARD PLAN FOR

GUARDRAIL APPROACH TERMINAL TYPES 1B & 1T (SRT, FLEAT & X-LITE-FLARED)

F.H.W.A. APPROVAL	6-6-2016 PLAN DATE	R-61-H	SHEET 3 OF 19

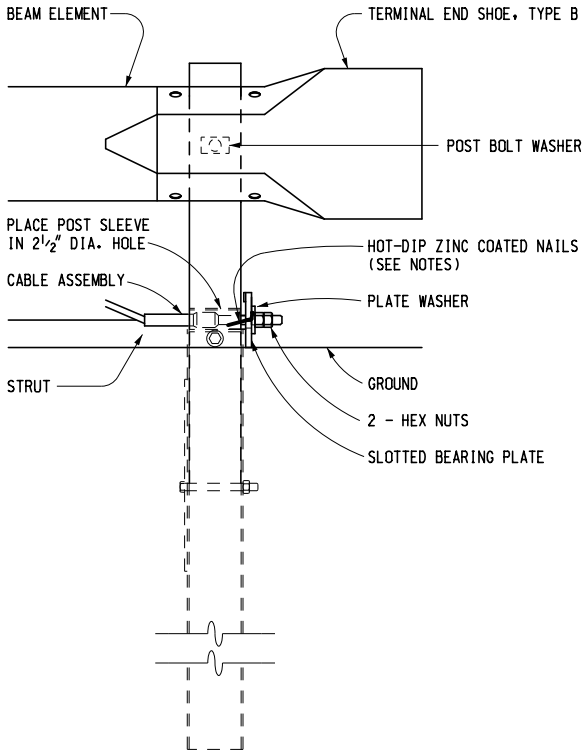

ELEVATION

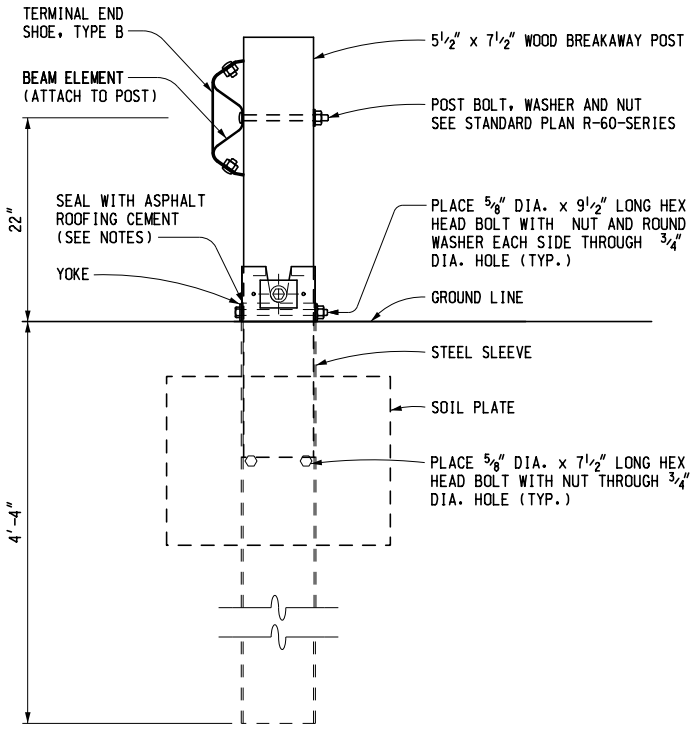

SIDE

POST 1 DETAIL
(SRT)

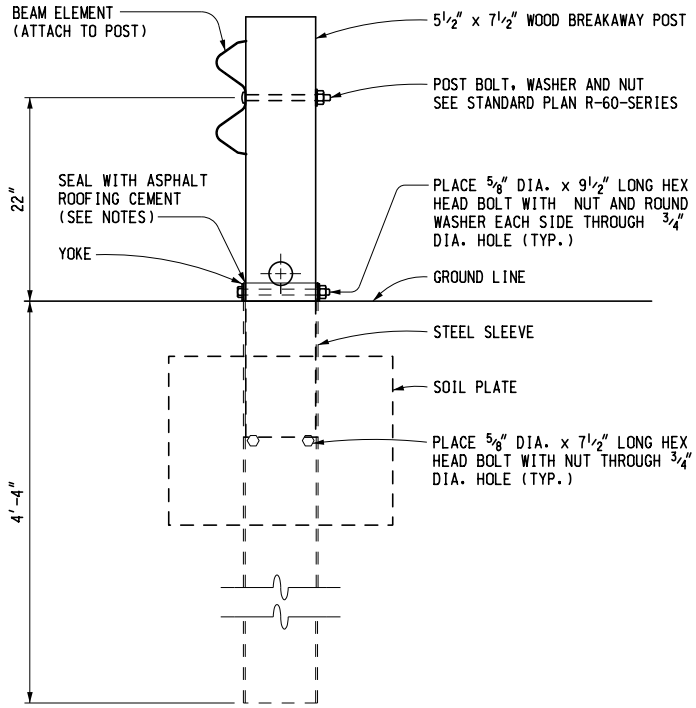

POST 2 DETAIL
(SRT)

NOTES:

DETAILS ON THIS SHEET ONLY APPLY TO "SRT".

TWO HOT-DIP ZINC COATED NAILS SHALL BE DRIVEN INTO THE WOOD POST THROUGH THE HOLES IN THE SLOTTED BEARING PLATE ON POST 1 OF THE "SRT" TO KEEP THE PLATE FROM ROTATING.

AFTER THE CABLE ASSEMBLY HAS BEEN TIGHTENED, A SECOND NUT SHALL BE INSTALLED ON EACH END OF THE CABLE SO THAT THE CABLE WILL NOT LOOSEN.

ASPHALT ROOFING CEMENT SHALL BE USED TO SEAL THE PERIMETER AREA BETWEEN THE STEEL SLEEVE (SOIL TUBE) AND THE WOOD BREAKAWAY POST.

MICHIGAN DEPARTMENT OF TRANSPORTATION
BUREAU OF DEVELOPMENT STANDARD PLAN FOR

GUARDRAIL APPROACH TERMINAL TYPES 1B & 1T (SRT, FLEAT & X-LITE-FLARED)

F.H.W.A. APPROVAL	6-6-2016 PLAN DATE	R-61-H	SHEET 4 OF 19

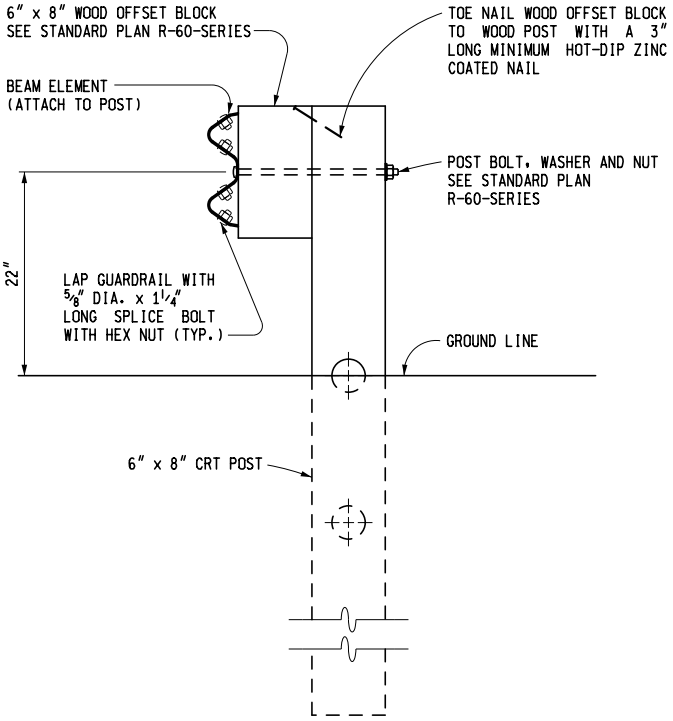

POST 3 AND 6 DETAIL
(SRT)

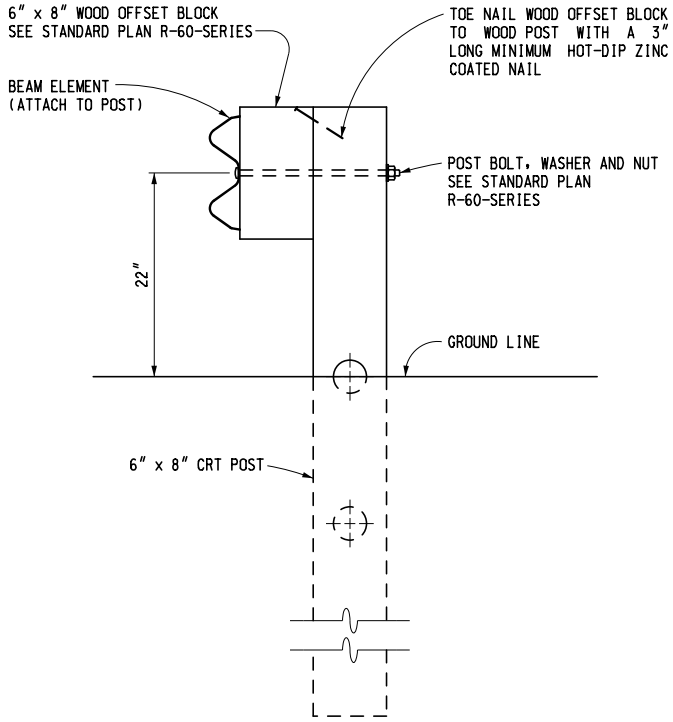

POST 4 AND 5 DETAIL
(SRT)

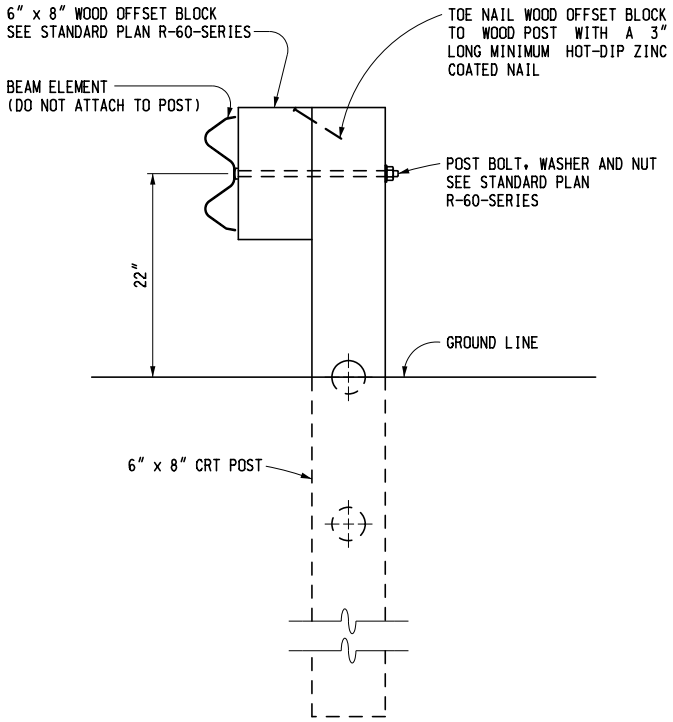

POST 7 AND 8 DETAIL
(SRT)

NOTE: POST 9 IS A STANDARD LINE POST

NOTE:

DETAILS ON THIS SHEET ONLY APPLY TO "SRT".

MICHIGAN DEPARTMENT OF TRANSPORTATION
BUREAU OF DEVELOPMENT STANDARD PLAN FOR

GUARDRAIL APPROACH TERMINAL TYPES 1B & 1T (SRT, FLEAT & X-LITE-FLARED)

F.H.W.A. APPROVAL	6-6-2016 PLAN DATE	R-61-H	SHEET 5 OF 19

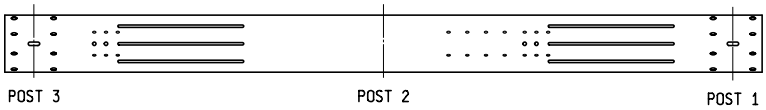

SLOTTED RAIL BEAM ELEMENT
(POST 1 THROUGH 3)

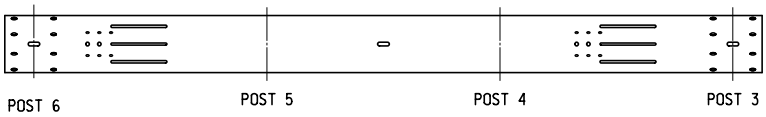

SLOTTED RAIL BEAM ELEMENT
(POST 3 THROUGH 6)

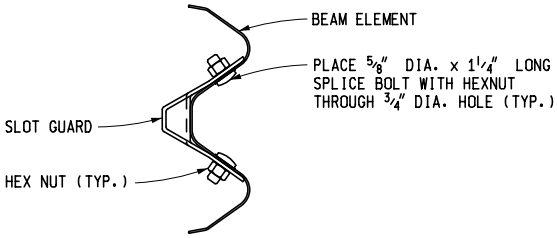

ASSEMBLY DETAIL

SLOT GUARD DETAILS

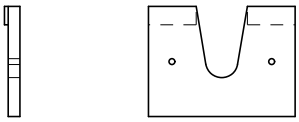

SLOTTED BEARING PLATE

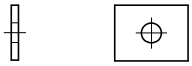

PLATE WASHER

NOTE: ALL "SRT" ITEMS ILLUSTRATED WITHOUT DIMENSIONS SHALL BE ACCORDING TO THE MANUFACTURER'S SPECIFICATIONS.

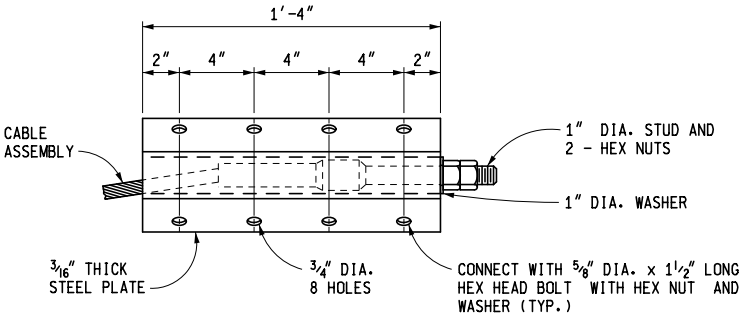

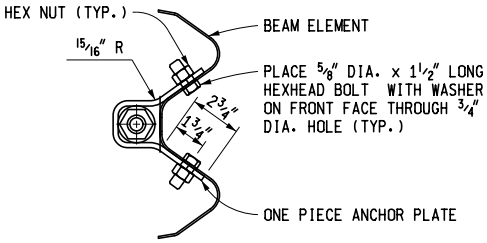

CABLE ANCHOR PLATE DETAILS
(SRT)

NOTES:

DETAILS ON THIS SHEET ONLY APPLY TO "SRT".

AFTER THE CABLE ASSEMBLY HAS BEEN TIGHTENED, A SECOND NUT SHALL BE INSTALLED ON EACH END OF THE CABLE SO THAT THE CABLE WILL NOT LOOSEN.

MICHIGAN DEPARTMENT OF TRANSPORTATION
BUREAU OF DEVELOPMENT STANDARD PLAN FOR

GUARDRAIL APPROACH TERMINAL TYPES 1B & 1T (SRT, FLEAT & X-LITE-FLARED)

F.H.W.A. APPROVAL	6-6-2016 PLAN DATE	R-61-H	SHEET 6 OF 19

POST	** POST OFFSET DISTANCE	
1	4.0′	48″
2	3.33′	40″
3	2.67′	32″
4	2.22′	26 11/16″
5	1.77′	21 5/16″
6	1.33′	16″
7	0.67′	8″
8	0′	0″

THE POST OFFSET DIMENSIONS ARE GIVEN TO THE CENTER OF THE TRAFFIC FACE OF THE WOOD OFFSET BLOCKS, EXCEPT FOR THE FIRST AND SECOND POSTS WHICH ARE GIVEN TO THE CENTER OF THE TRAFFIC FACE OF THE POST. OFFSET POINTS ARE TO BE LOCATED BY CHORD MEASUREMENTS AT THE BACK OF THE RAIL EQUAL TO THE NOMINAL POST SPACINGS SPECIFIED. POSTS ARE TO BE SET APPROXIMATELY TANGENT TO THE BEAM ELEMENT AT EACH POST LOCATION.

** FOR LAYOUT ON CURVES SEE DETAIL ON SHEET 18.

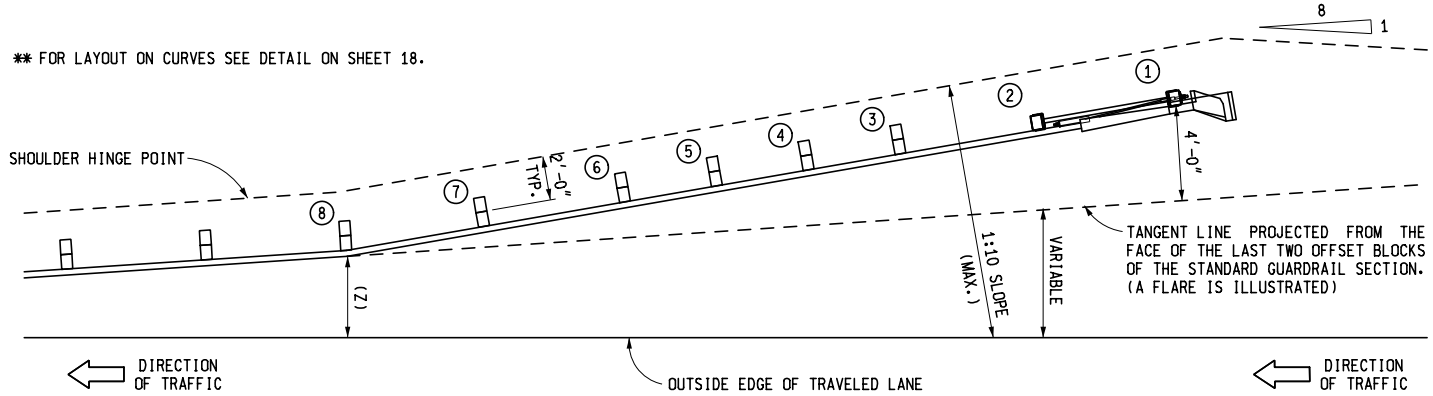

PLAN VIEW

* SEE STANDARD PLAN R-60-SERIES FOR POST SPACING AND GUARDRAIL LAYOUT TO TRANSITION FROM GUARDRAIL, TYPE MGS-8 TO GUARDRAIL APPROACH TERMINAL TYPE 1B

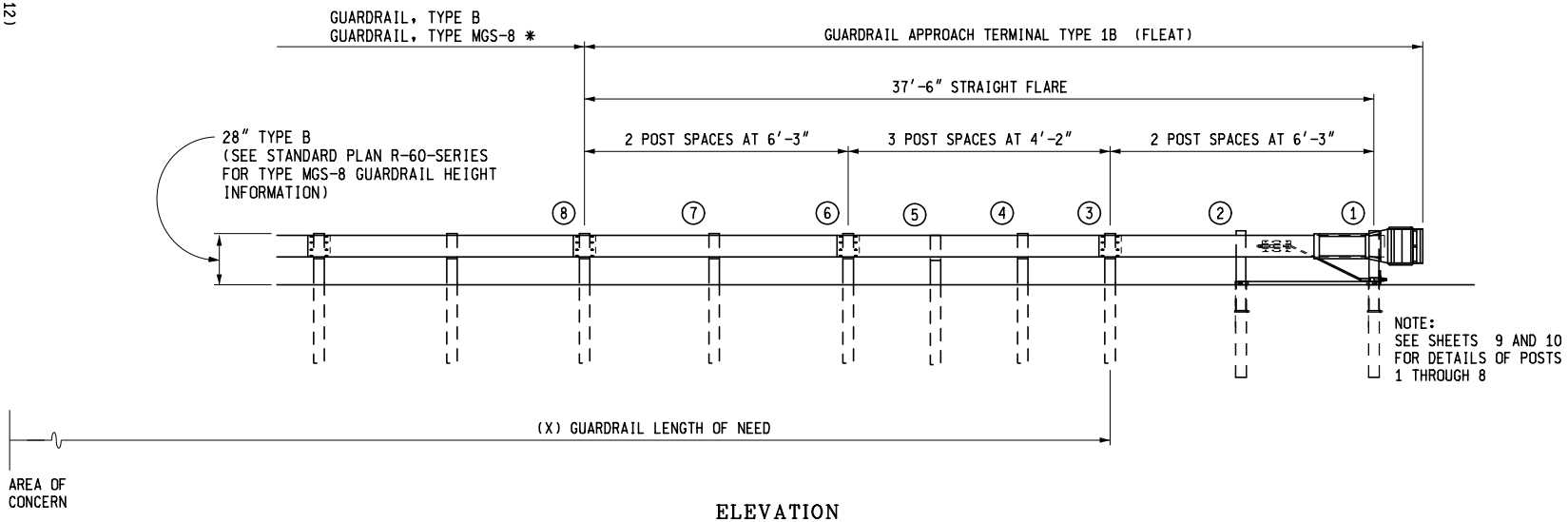

ELEVATION

GUARDRAIL APPROACH TERMINAL TYPE 1B "FLEAT"

OPTION 2

(DETAILED ON SHEETS 7 THROUGH 12)

MICHIGAN DEPARTMENT OF TRANSPORTATION
BUREAU OF DEVELOPMENT STANDARD PLAN FOR

GUARDRAIL APPROACH TERMINAL TYPES 1B & 1T (SRT, FLEAT & X-LITE-FLARED)

F.H.W.A. APPROVAL

6-6-2016
PLAN DATE

R-61-H

SHEET 7 OF 19

POST	** POST OFFSET DISTANCE	
1	4.0′	48″
2	3.33′	40″
3	2.67′	32″
4	2.22′	26 11/16″
5	1.77′	21 5/16″
6	1.33′	16″
7	0.67′	8″
8	0′	0″

THE POST OFFSET DIMENSIONS ARE GIVEN TO THE CENTER OF THE TRAFFIC FACE OF THE WOOD OFFSET BLOCKS, EXCEPT FOR THE FIRST AND SECOND POSTS WHICH ARE GIVEN TO THE CENTER OF THE TRAFFIC FACE OF THE POST. OFFSET POINTS ARE TO BE LOCATED BY CHORD MEASUREMENTS AT THE BACK OF THE RAIL EQUAL TO THE NOMINAL POST SPACINGS SPECIFIED. POSTS ARE TO BE SET APPROXIMATELY TANGENT TO THE BEAM ELEMENT AT EACH POST LOCATION.

** FOR LAYOUT ON CURVES SEE DETAIL ON SHEET 18.

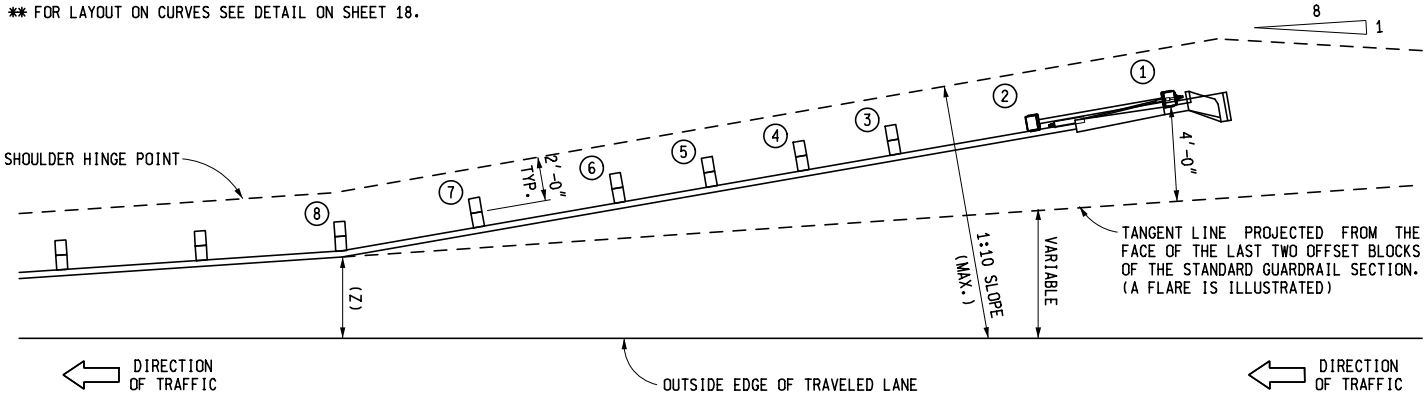

PLAN VIEW

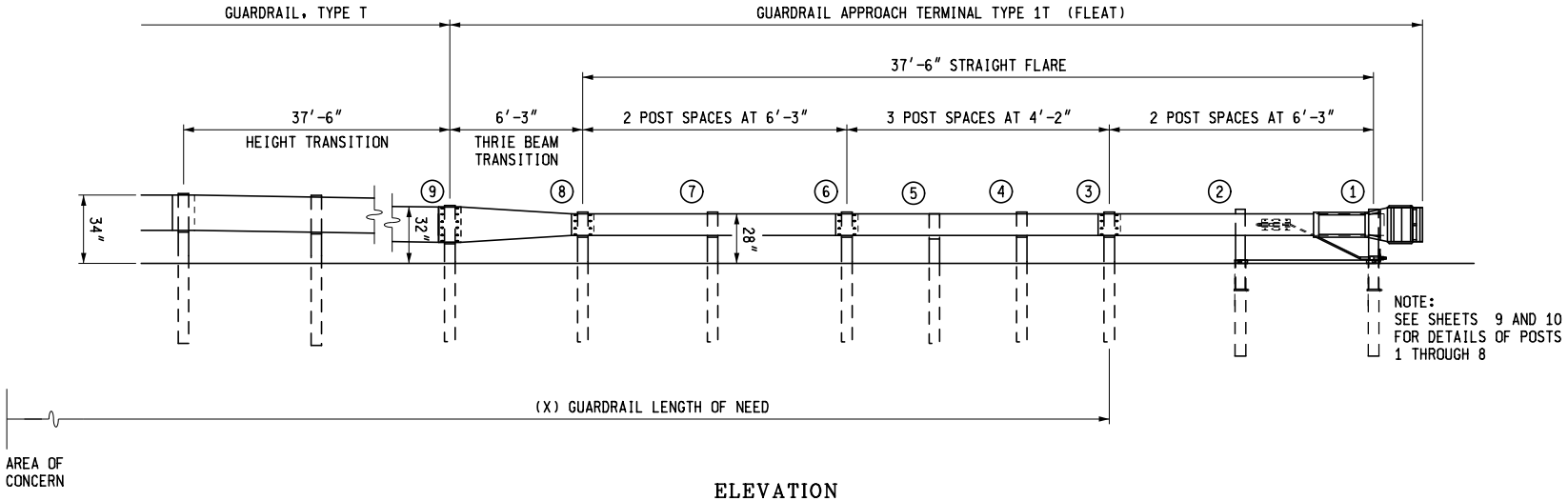

ELEVATION

GUARDRAIL APPROACH TERMINAL TYPE 1T "FLEAT"

MICHIGAN DEPARTMENT OF TRANSPORTATION
BUREAU OF DEVELOPMENT STANDARD PLAN FOR

GUARDRAIL APPROACH TERMINAL TYPES 1B & 1T (SRT, FLEAT & X-LITE-FLARED)

F.H.W.A. APPROVAL

6-6-2016
PLAN DATE

R-61-H

SHEET 8 OF 19

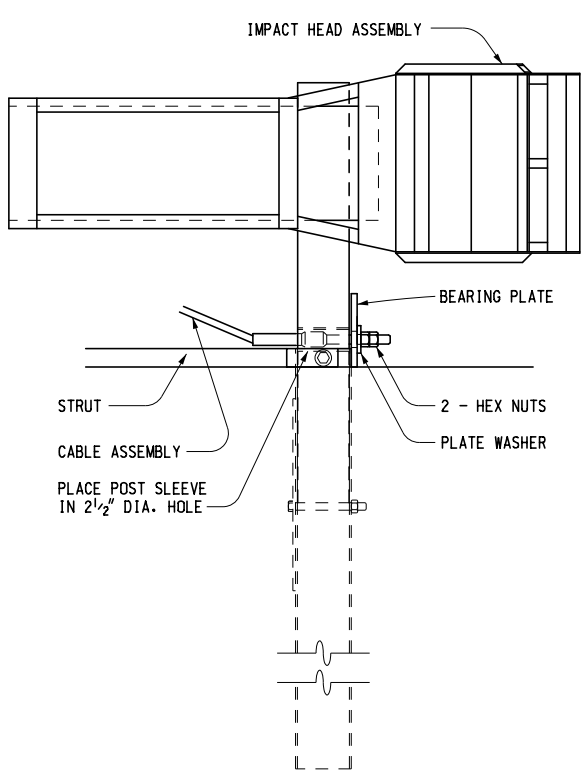

ELEVATION

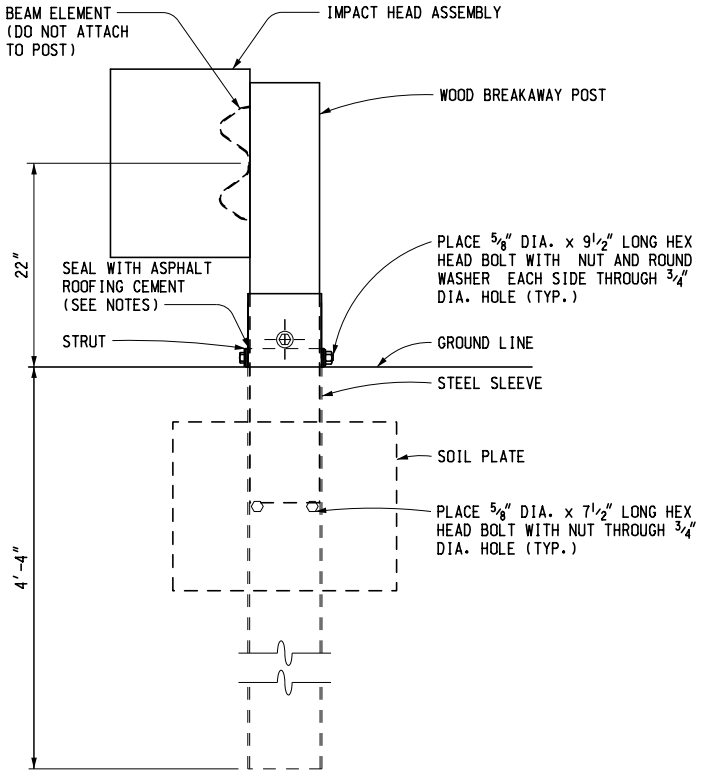

SIDE

POST 1 DETAIL

(FLEAT)

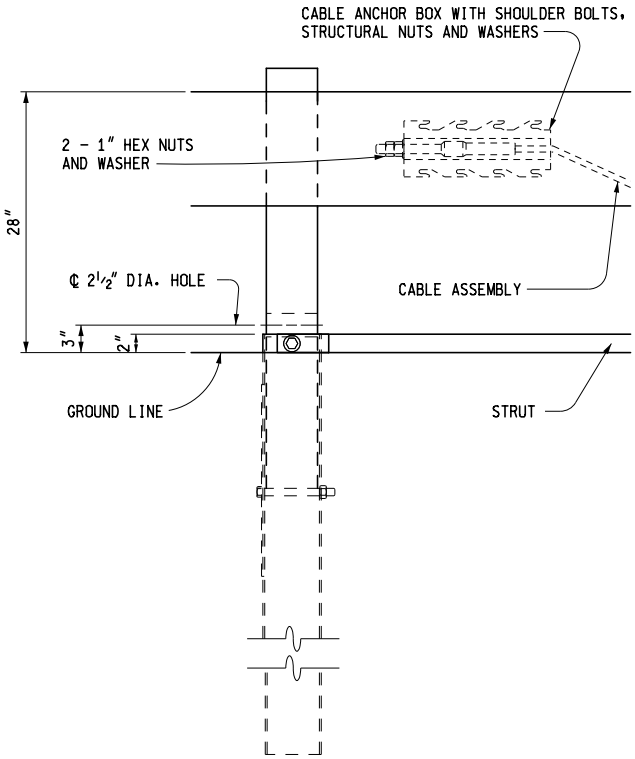

ELEVATION

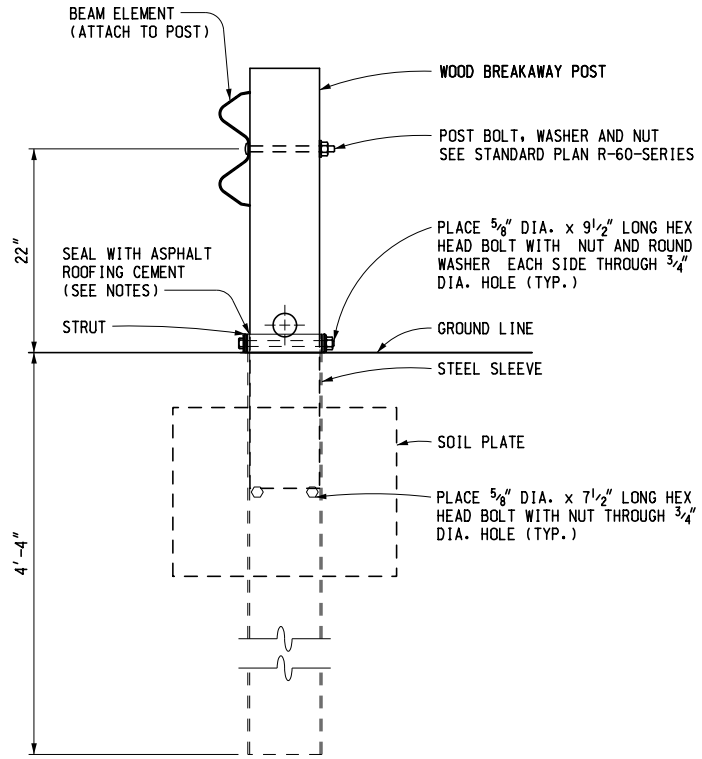

SIDE

POST 2 DETAIL

(FLEAT)

NOTES:

DETAILS ON THIS SHEET ONLY APPLY TO "FLEAT".

AFTER THE CABLE ASSEMBLY HAS BEEN TIGHTENED, A SECOND NUT SHALL BE INSTALLED ON EACH END OF THE CABLE SO THAT THE CABLE WILL NOT LOOSEN.

ASPHALT ROOFING CEMENT SHALL BE USED TO SEAL THE PERIMETER AREA BETWEEN THE STEEL SLEEVE (SOIL TUBE) AND THE WOOD BREAKAWAY POST.

MICHIGAN DEPARTMENT OF TRANSPORTATION
BUREAU OF DEVELOPMENT STANDARD PLAN FOR

GUARDRAIL APPROACH TERMINAL TYPES 1B & 1T (SRT, FLEAT & X-LITE-FLARED)

F.H.W.A. APPROVAL	6-6-2016 PLAN DATE	R-61-H	SHEET 9 OF 19

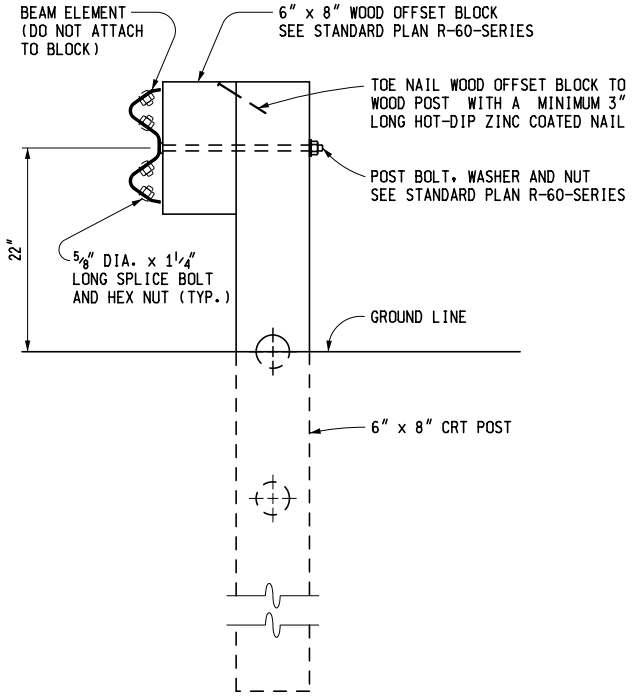

POST 3 DETAIL
(FLEAT)

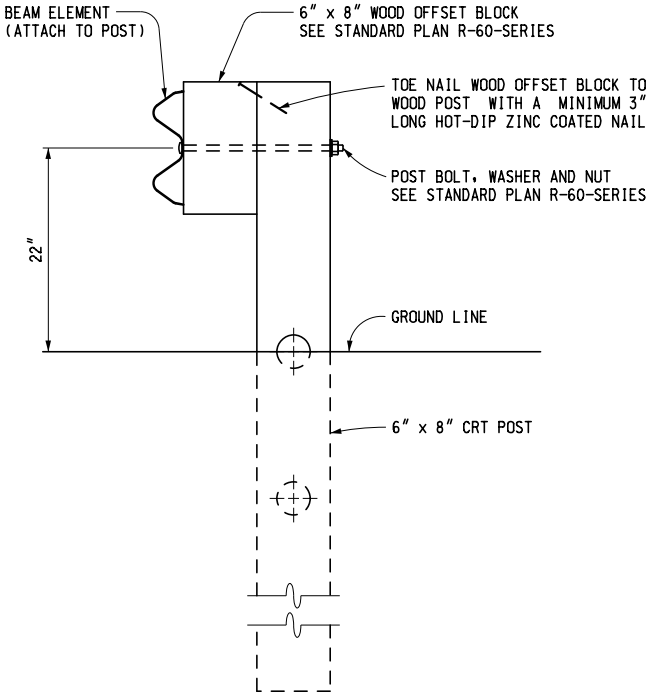

POST 4 THROUGH 7 DETAIL
(FLEAT)

NOTE: POST 8 IS A STANDARD LINE POST

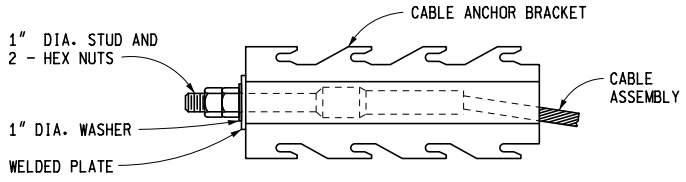

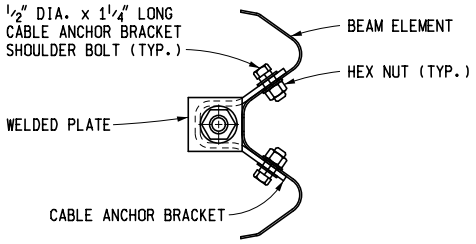

CABLE ANCHOR BRACKET DETAIL
(FLEAT)

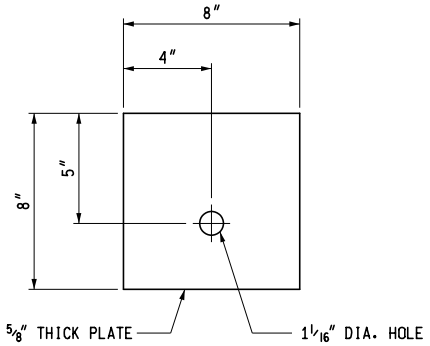

BEARING PLATE
(FLEAT)

W-BEAM GUARDRAIL END SECTION
(POST 1 THROUGH 3)

NOTE: ALL "FLEAT" ITEMS ILLUSTRATED WITHOUT DIMENSIONS SHALL BE ACCORDING TO THE MANUFACTURER'S SPECIFICATIONS.

NOTES:

DETAILS ON THIS SHEET ONLY APPLY TO "FLEAT".

AFTER THE CABLE ASSEMBLY HAS BEEN TIGHTENED, A SECOND NUT SHALL BE INSTALLED ON EACH END OF THE CABLE SO THAT THE CABLE WILL NOT LOOSEN.

MICHIGAN DEPARTMENT OF TRANSPORTATION
BUREAU OF DEVELOPMENT STANDARD PLAN FOR

GUARDRAIL APPROACH TERMINAL TYPES 1B & 1T (SRT, FLEAT & X-LITE-FLARED)

F.H.W.A. APPROVAL	6-6-2016 PLAN DATE	R-61-H	SHEET 10 OF 19

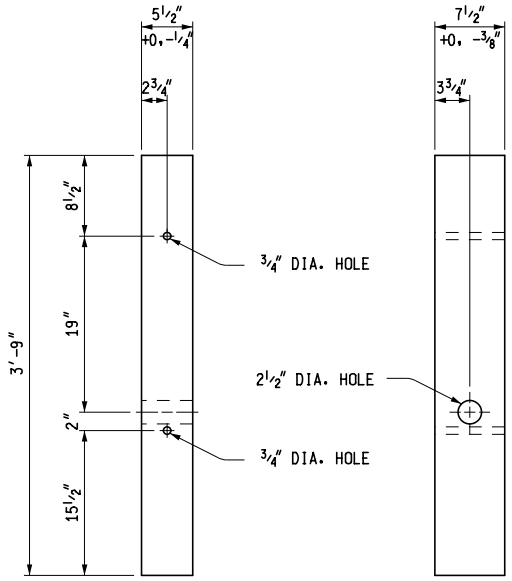

WOOD BREAKAWAY POST

POSTS 1 AND 2 "SRT" AND "FLEAT"

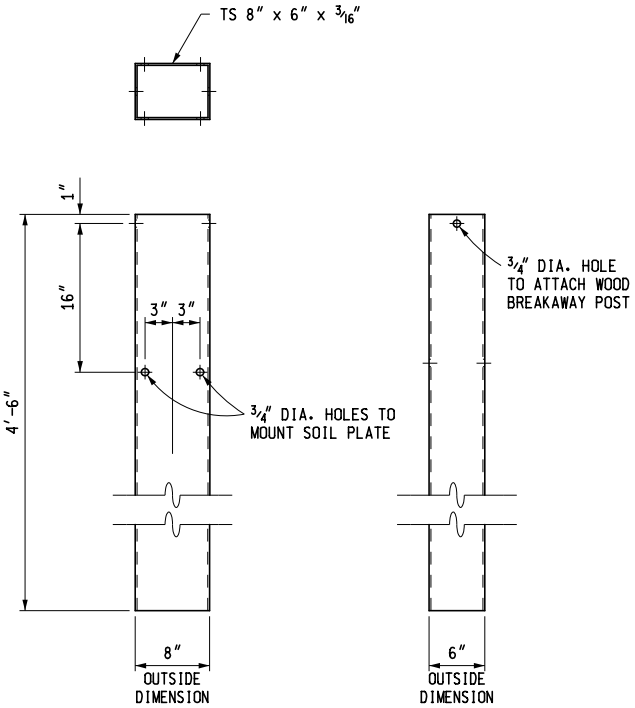

STEEL SLEEVE

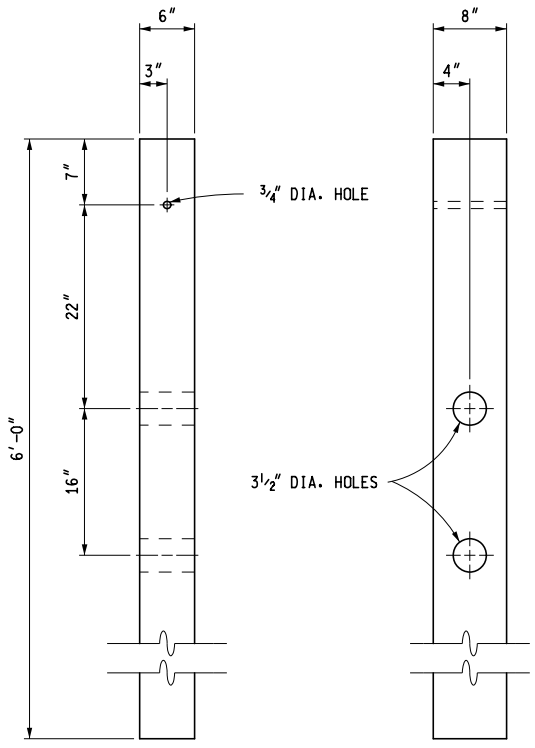

CRT POST

POSTS 3 THROUGH 9 "SRT"
POSTS 3 THROUGH 7 "FLEAT"

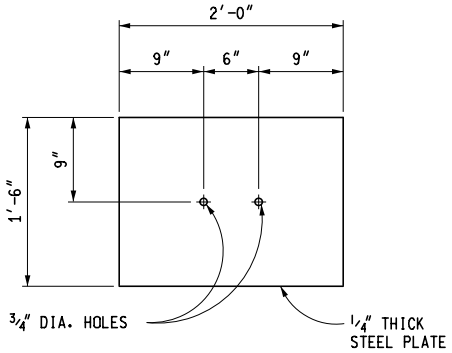

SOIL PLATE

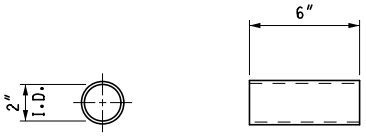

POST SLEEVE

(FOR POST 1)

NOTE:

DETAILS ON THIS SHEET ONLY APPLY TO "SRT" AND "FLEAT".

MICHIGAN DEPARTMENT OF TRANSPORTATION
BUREAU OF DEVELOPMENT STANDARD PLAN FOR

GUARDRAIL APPROACH TERMINAL TYPES 1B & 1T (SRT, FLEAT & X-LITE-FLARED)

F.H.W.A. APPROVAL	6-6-2016 PLAN DATE	R-61-H	SHEET 11 OF 19

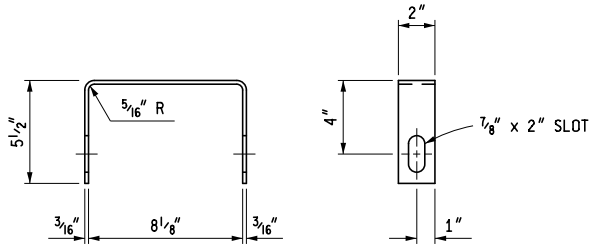

YOKE DETAIL

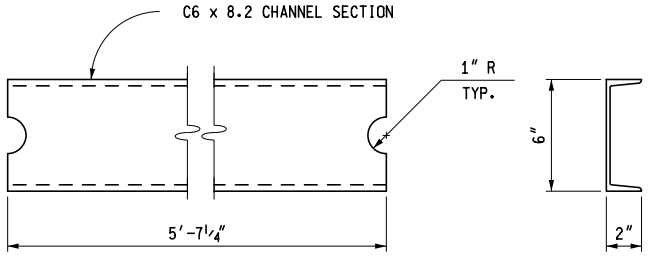

STRUT DETAIL

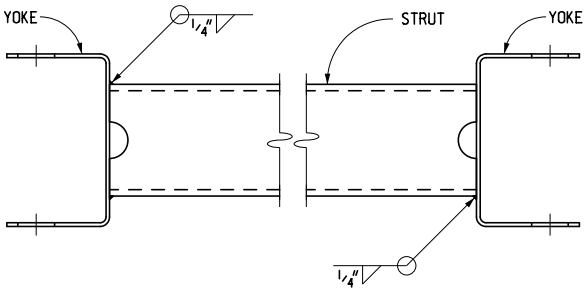

ASSEMBLY DETAIL

STRUT AND YOKE ASSEMBLY

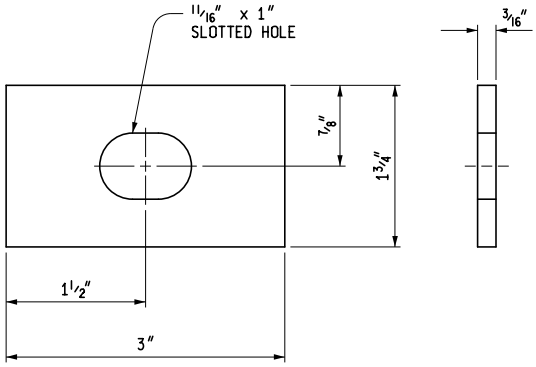

POST BOLT WASHER

(POST 1 ONLY)

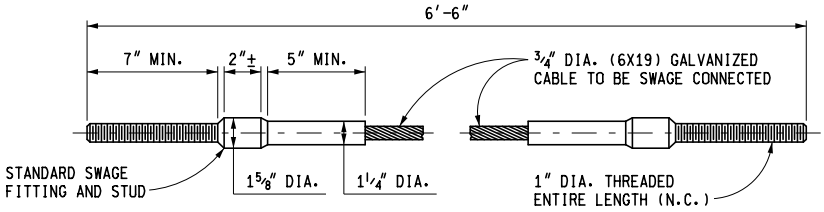

CABLE ASSEMBLY

NOTE:

DETAILS ON THIS SHEET ONLY APPLY TO "SRT" AND "FLEAT".

MICHIGAN DEPARTMENT OF TRANSPORTATION

BUREAU OF DEVELOPMENT STANDARD PLAN FOR

GUARDRAIL APPROACH TERMINAL TYPES 1B & 1T (SRT, FLEAT & X-LITE-FLARED)

F.H.W.A. APPROVAL	6-6-2016 PLAN DATE	R-61-H	SHEET 12 OF 19

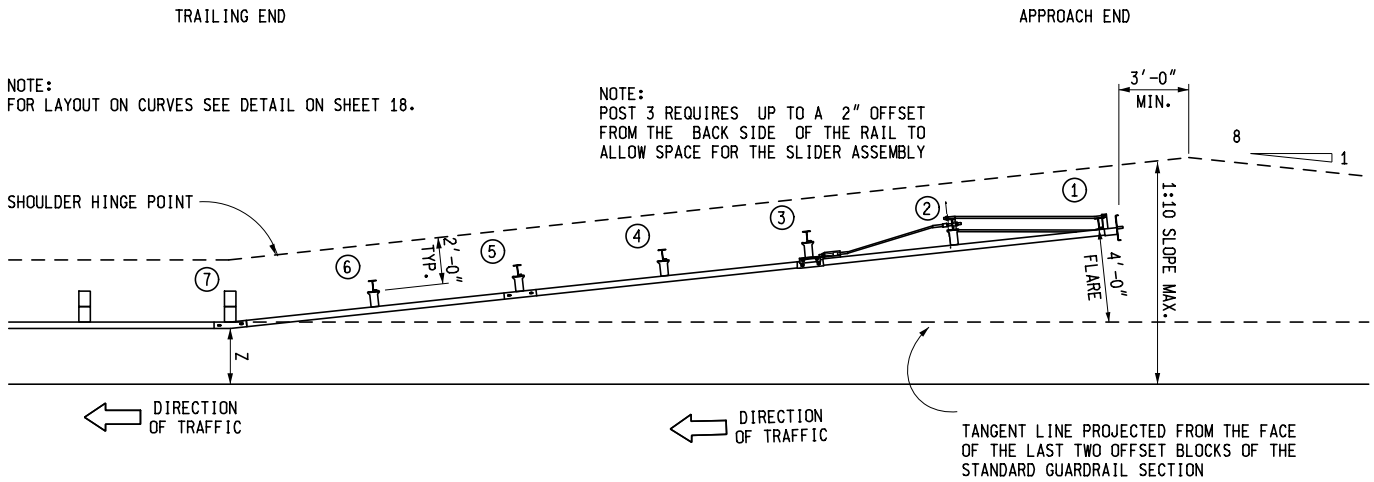

PLAN VIEW

* SEE STANDARD PLAN R-60-SERIES FOR POST SPACING AND GUARDRAIL LAYOUT TO TRANSITION FROM GUARDRAIL, TYPE MGS-8 TO GUARDRAIL APPROACH TERMINAL TYPE 1B

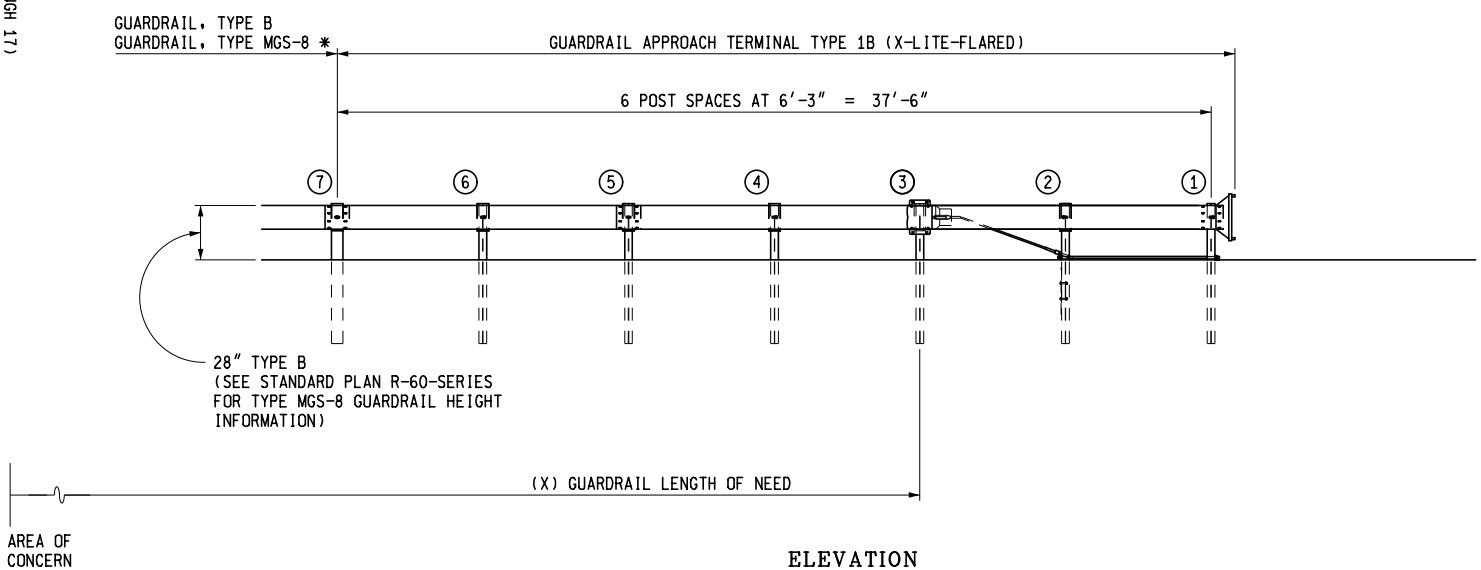

ELEVATION

GUARDRAIL APPROACH TERMINAL TYPE 1B "X-LITE-FLARED"

OPTION 3

(DETAILED ON SHEETS 13 THROUGH 17)

MICHIGAN DEPARTMENT OF TRANSPORTATION
BUREAU OF DEVELOPMENT STANDARD PLAN FOR

GUARDRAIL APPROACH TERMINAL TYPES 1B & 1T (SRT, FLEAT & X-LITE-FLARED)

F.H.W.A. APPROVAL

6-6-2016
PLAN DATE

R-61-H

SHEET 13 OF 19

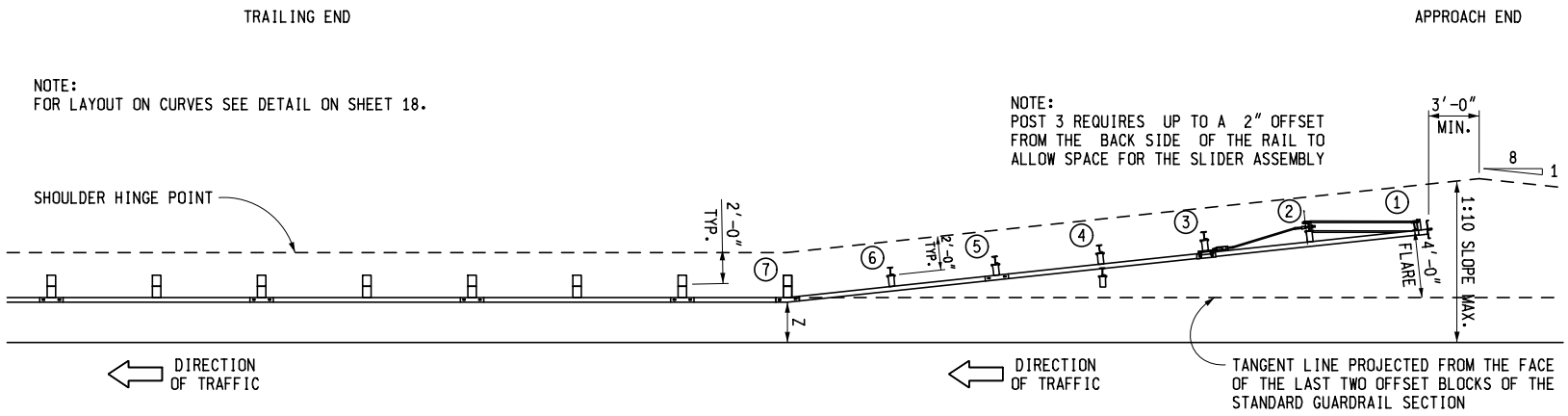

PLAN VIEW

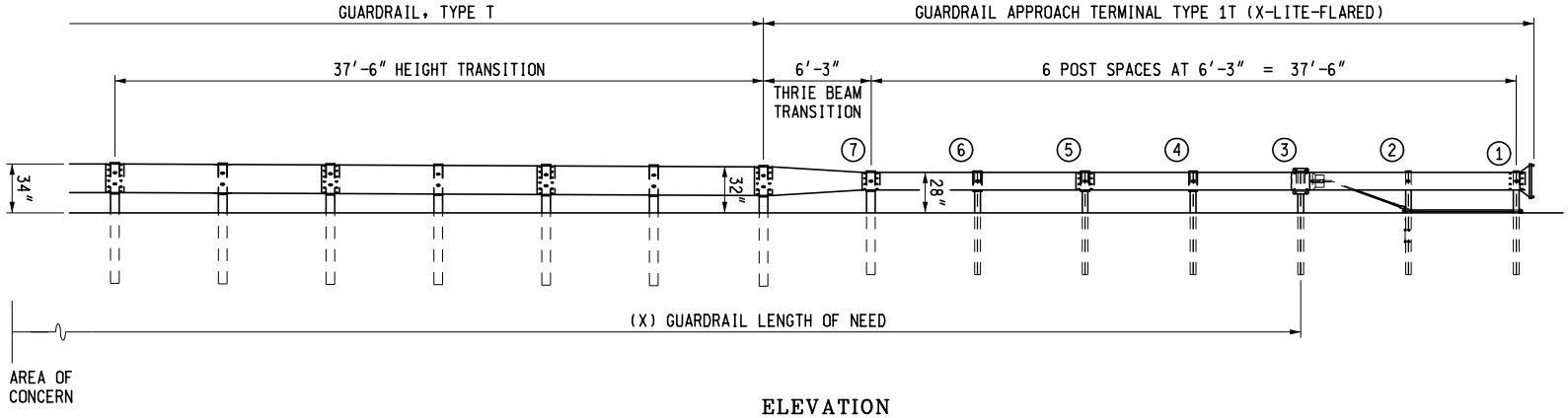

ELEVATION

GUARDRAIL APPROACH TERMINAL TYPE 1T "X-LITE-FLARED"

MICHIGAN DEPARTMENT OF TRANSPORTATION
BUREAU OF DEVELOPMENT STANDARD PLAN FOR

GUARDRAIL APPROACH TERMINAL TYPES 1B & 1T (SRT, FLEAT & X-LITE-FLARED)

F.H.W.A. APPROVAL

6-6-2016
PLAN DATE

R-61-H

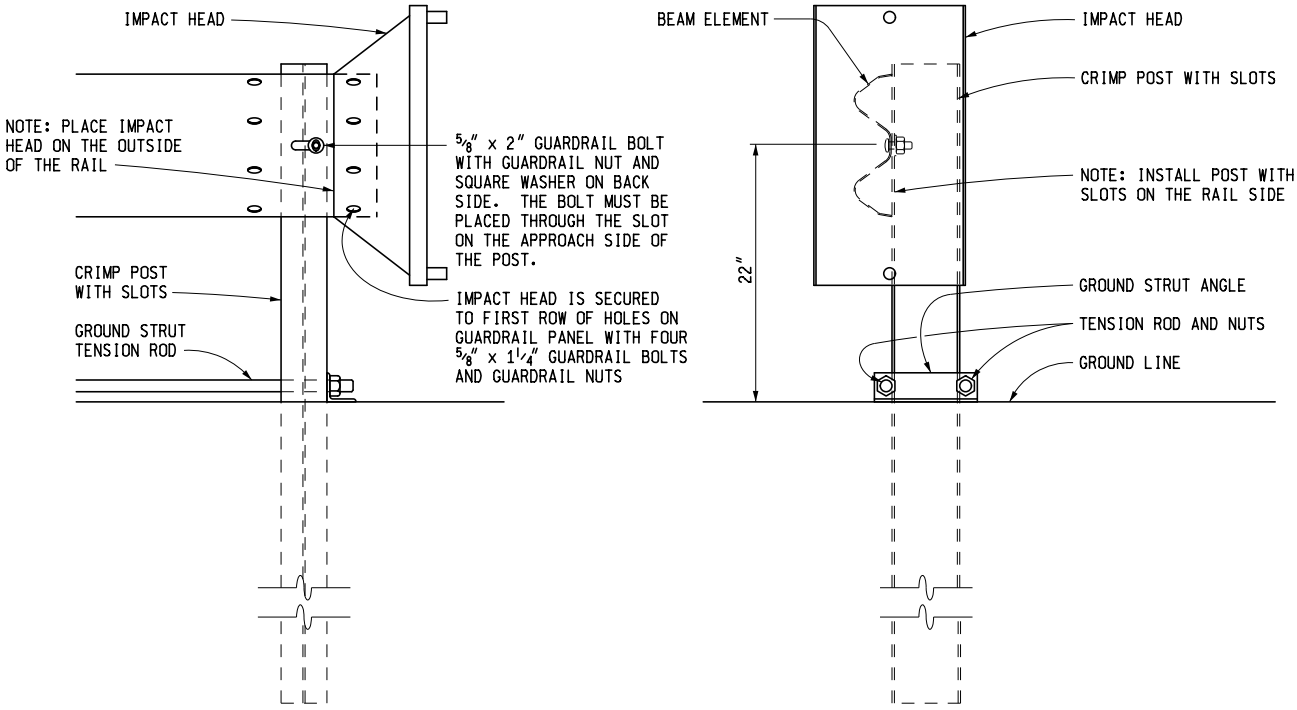

ELEVATION

SIDE

POST 1 DETAIL

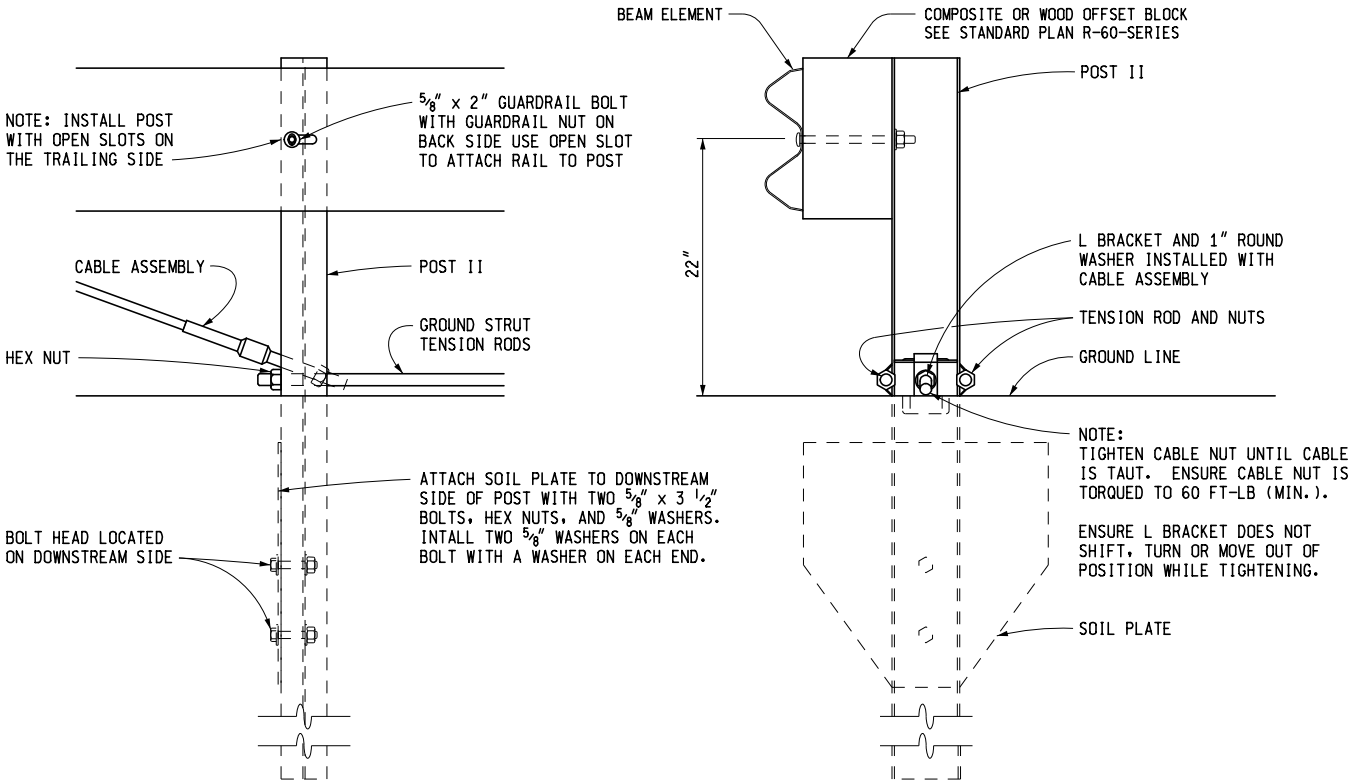

ELEVATION

SIDE

POST 2 DETAIL

NOTE:

DETAILS ON THIS SHEET ONLY APPLY TO "X-LITE-FLARED".

MICHIGAN DEPARTMENT OF TRANSPORTATION

BUREAU OF DEVELOPMENT STANDARD PLAN FOR

GUARDRAIL APPROACH TERMINAL TYPES 1B & 1T (SRT, FLEAT & X-LITE-FLARED)

F.H.W.A. APPROVAL	6-6-2016 PLAN DATE	R-61-H	SHEET 15 OF 19

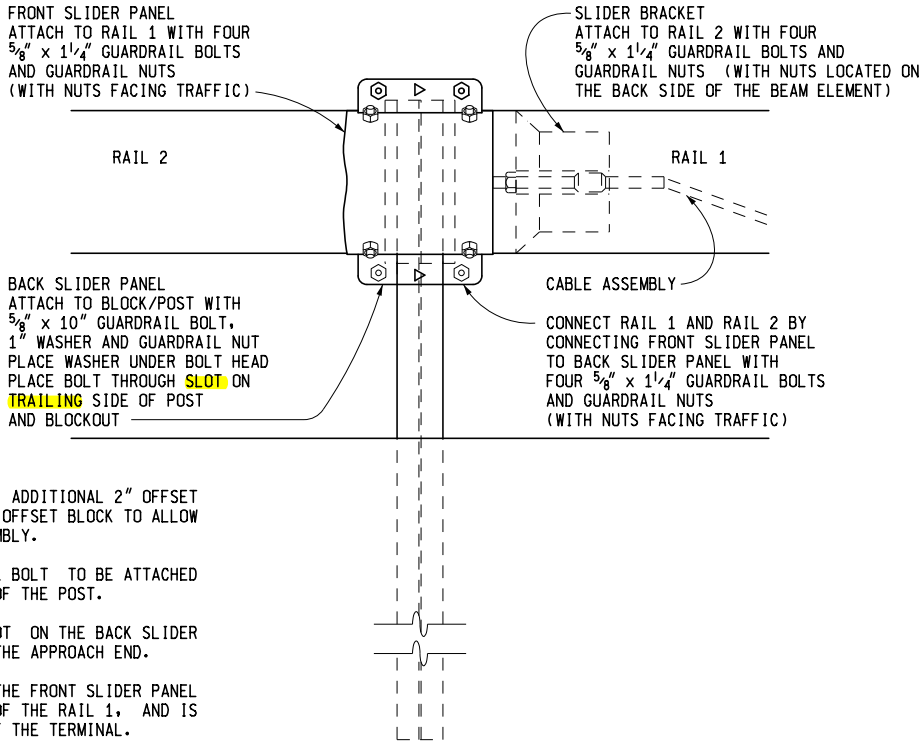

ELEVATION

NOTES:

POST 3 REQUIRES UP TO AN ADDITIONAL 2" OFFSET BETWEEN THE RAIL AND THE OFFSET BLOCK TO ALLOW SPACE FOR THE SLIDER ASSEMBLY.

POST 3 REQUIRES GUARDRAIL BOLT TO BE ATTACHED TO SLOT ON TRAILING SIDE OF THE POST.

ENSURE OPEN END OF THE SLOT ON THE BACK SLIDER PANEL IS POINTING TOWARD THE APPROACH END.

ENSURE ANGLED PORTION OF THE FRONT SLIDER PANEL EXTENDS BEYOND THE END OF THE RAIL 1, AND IS FACING THE TRAILING END OF THE TERMINAL.

ARROWS ON FRONT AND BACK SLIDER PANELS NEED TO POINT TOWARD THE APPROACH END OF THE TERMINAL.

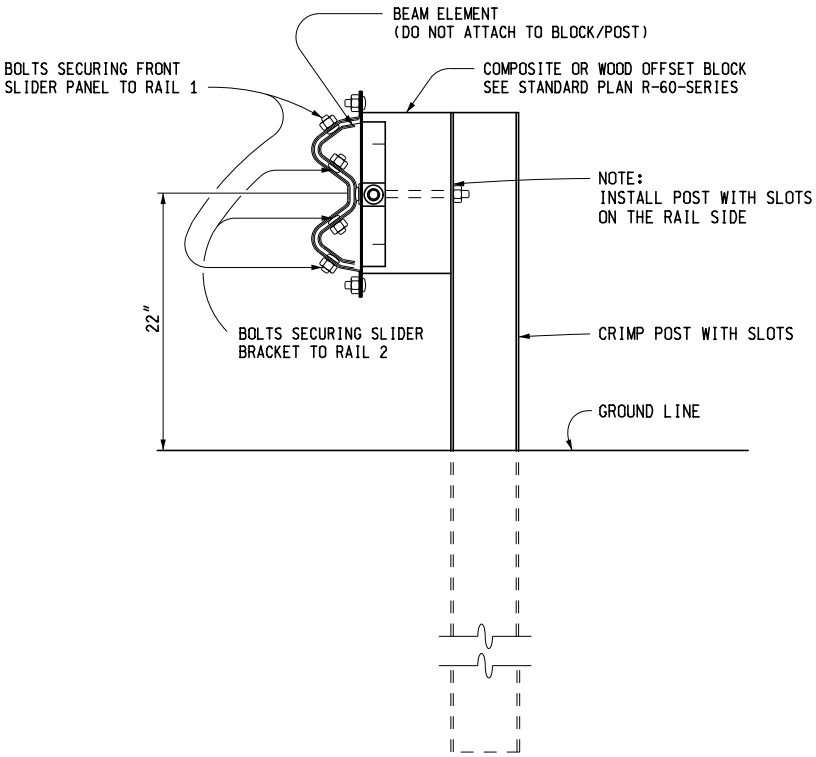

SIDE

POST 3 DETAIL

NOTE:

DETAILS ON THIS SHEET ONLY APPLY TO "X-LITE-FLARED".

MICHIGAN DEPARTMENT OF TRANSPORTATION
BUREAU OF DEVELOPMENT STANDARD PLAN FOR

GUARDRAIL APPROACH TERMINAL TYPES 1B & 1T (SRT, FLEAT & X-LITE-FLARED)

F.H.W.A. APPROVAL	6-6-2016 PLAN DATE	R-61-H	SHEET 16 OF 19

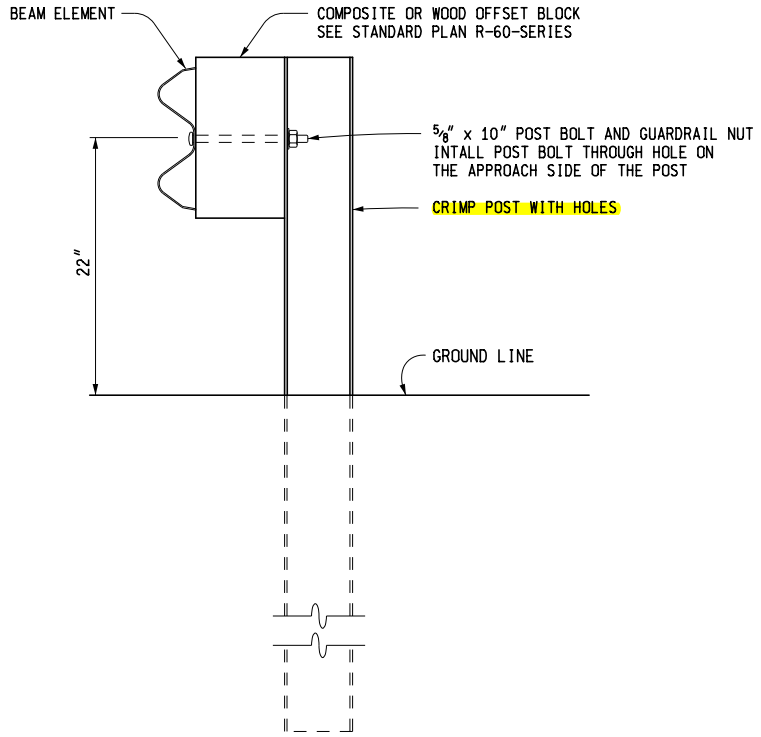

POST 4 AND 6 DETAIL

NOTE:
OVERLAP BEAM ELEMENTS WITH ELEMENTS ON THE APPROACH END OVER ELEMENTS ON THE TRAILING END.

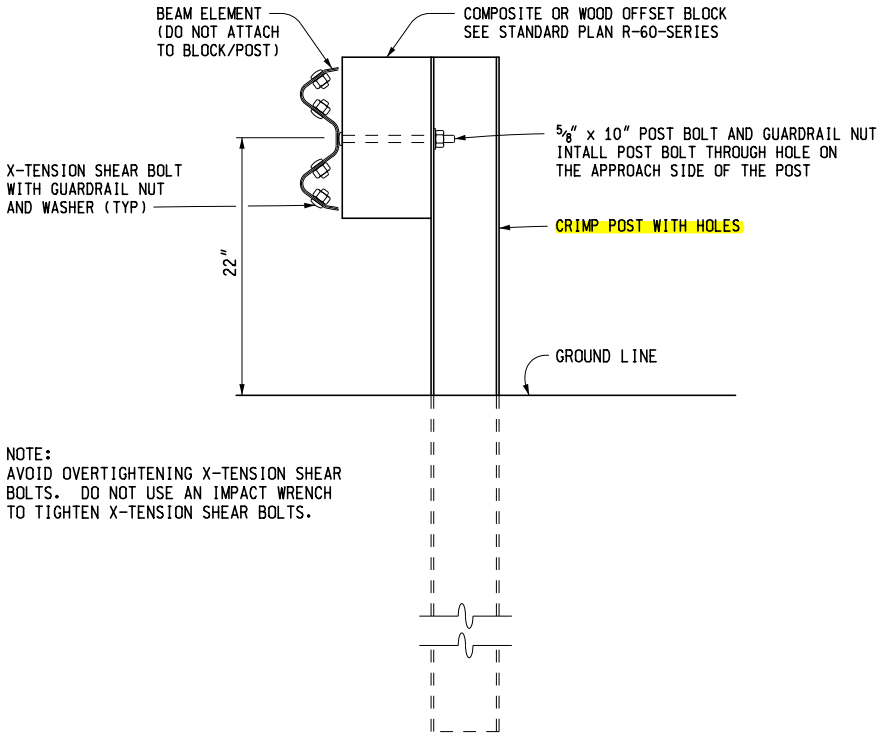

NOTE:
AVOID OVERTIGHTENING X-TENSION SHEAR BOLTS. DO NOT USE AN IMPACT WRENCH TO TIGHTEN X-TENSION SHEAR BOLTS.

POST 5

NOTE:
POST 7 IS A STANDARD LINE POST.

NOTE:

DETAILS ON THIS SHEET ONLY APPLY TO "X-LITE-FLARED".

MICHIGAN DEPARTMENT OF TRANSPORTATION
BUREAU OF DEVELOPMENT STANDARD PLAN FOR

GUARDRAIL APPROACH TERMINAL TYPES 1B & 1T (SRT, FLEAT & X-LITE-FLARED)

F.H.W.A. APPROVAL	6-6-2016 PLAN DATE	R-61-H	SHEET 17 OF 19

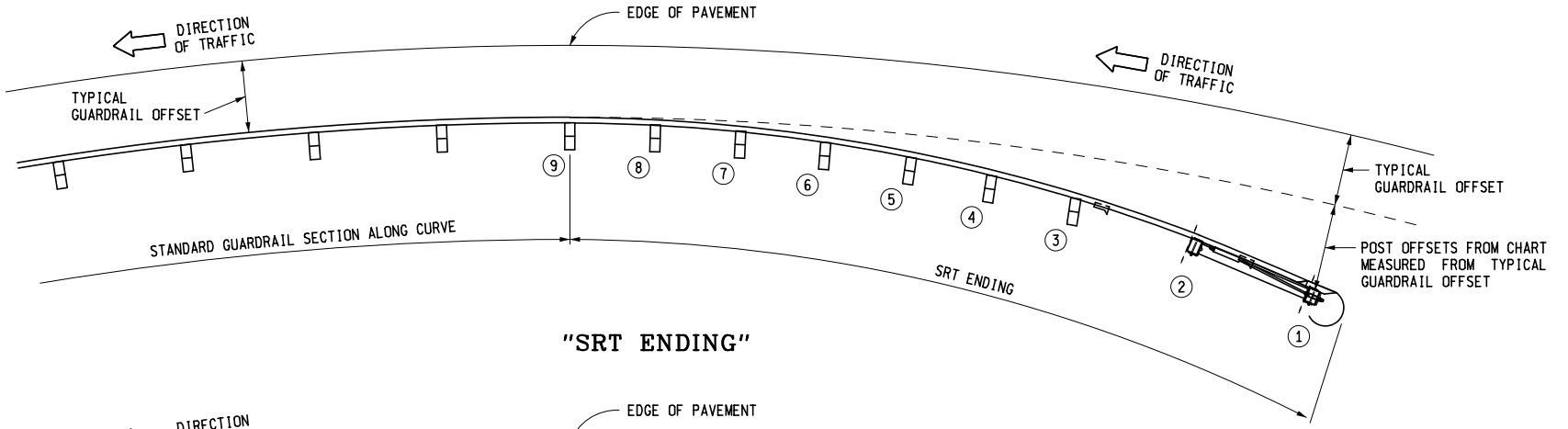

"SRT ENDING"

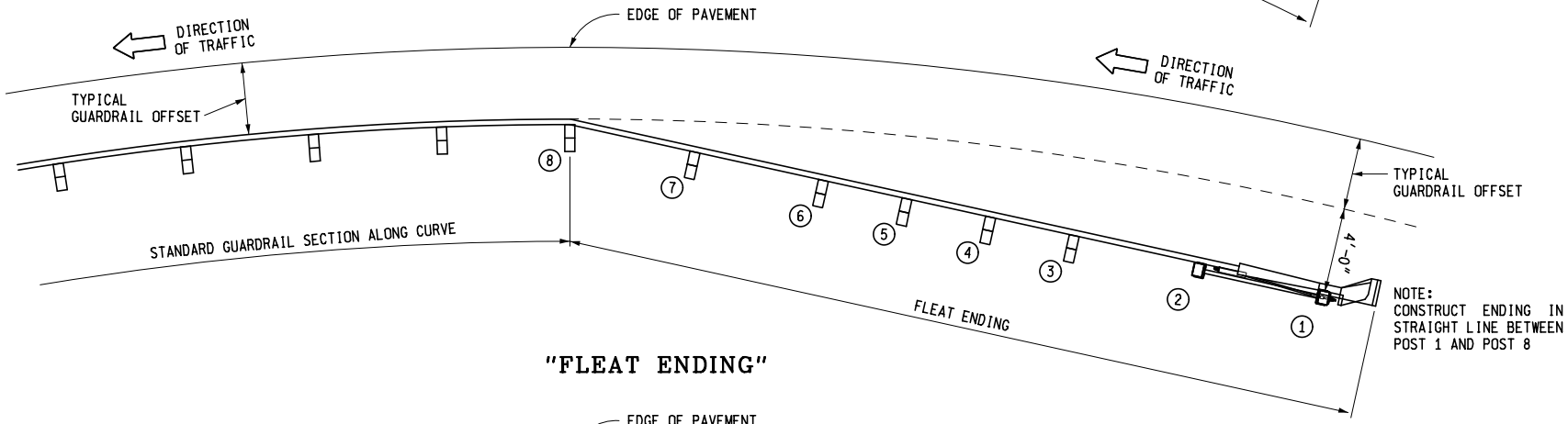

NOTE:
CONSTRUCT ENDING IN STRAIGHT LINE BETWEEN POST 1 AND POST 8

"FLEAT ENDING"

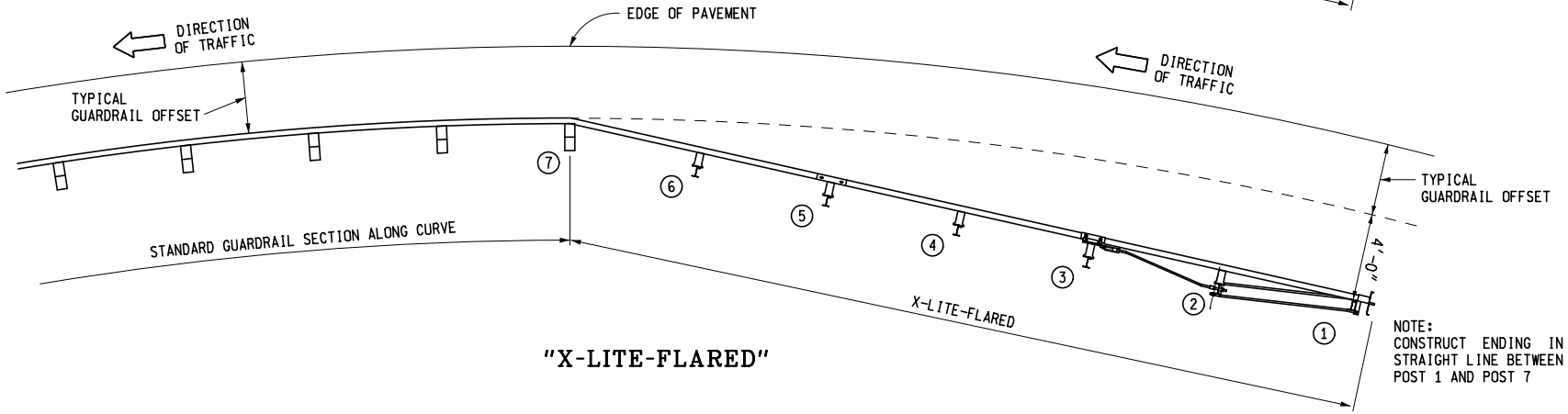

NOTE:
CONSTRUCT ENDING IN STRAIGHT LINE BETWEEN POST 1 AND POST 7

"X-LITE-FLARED"

LOCATION OF APPROACH GUARDRAIL ON CURVES

MICHIGAN DEPARTMENT OF TRANSPORTATION
BUREAU OF DEVELOPMENT STANDARD PLAN FOR

GUARDRAIL APPROACH TERMINAL TYPES 1B & 1T (SRT, FLEAT & X-LITE-FLARED)

F.H.W.A. APPROVAL

6-6-2016
PLAN DATE

R-61-H

SHEET 18 OF 19

NOTES:

ALL POSTS, OFFSET BLOCKS, BEAM ELEMENTS, AND HARDWARE (INCLUDING BOLTS, NUTS, AND WASHERS) SHALL CONFORM TO THE CURRENT STANDARD SPECIFICATIONS AND TO THE CURRENT STANDARD PLAN R-60-SERIES, WHERE APPLICABLE, EXCEPT AS SPECIFIED ON THIS STANDARD.

ALL 1:10 SLOPES SHALL BE GRADED TO CLASS A SLOPE TOLERANCES.

GUARDRAIL REFLECTORS ARE NOT TO BE USED ON THE GUARDRAIL APPROACH TERMINAL. PLACE REFLECTORS BEGINNING ON STANDARD RUN OF GUARDRAIL.

USE REFLECTIVE SHEETING ACCORDING TO THE FOLLOWING TRAFFIC CONDITIONS:
(NOTE: ALTERNATE 3" BLACK AND 3" YELLOW STRIPES ON A 45° ANGLE)

TRAFFIC PASSING ON THE LEFT SIDE

TRAFFIC PASSING ON BOTH SIDES

TRAFFIC PASSING ON THE RIGHT SIDE

ON THE "SRT", THE CURVED PORTION OF THE TERMINAL END SHOE FACING TRAFFIC (HALF CIRCLE) SHALL BE COMPLETELY COVERED WITH HIGH INTENSITY ADHESIVE REFLECTIVE SHEETING.

ON THE "FLEAT" AND "X-LITE-FLARED", THE PORTION OF THE IMPACT HEAD ASSEMBLY FACING TRAFFIC SHALL BE COMPLETELY COVERED WITH HIGH INTENSITY ADHESIVE REFLECTIVE SHEETING.

MICHIGAN DEPARTMENT OF TRANSPORTATION
BUREAU OF DEVELOPMENT STANDARD PLAN FOR

GUARDRAIL APPROACH TERMINAL TYPES 1B & 1T (SRT, FLEAT & X-LITE-FLARED)

F.H.W.A. APPROVAL	6-6-2016 PLAN DATE	R-61-H	SHEET 19 OF 19

Appendix

A-G

Appendix

Topic	Appendix #
Fix Guidelines	**A**
Recommended Corridor Pavement Management Strategies	A-1
Work Type Codes	A-2
CFP Rehabilitation & Reconstruction Fix Life Guidelines	A-3
CFP CPM Fix Life Guidelines	A-4
CPM Treatment Options & Condition Criteria	A-5
Bridge Deck Preservation Matrixes	A-6
Checklists	**B**
Statewide Scoping Package Master Checklist – Road (Form#0595)	
Road Scoping Report & Details Worksheet (Form#0595)	
Statewide Scoping Package Master Checklist – Road CPM (Form#0596)	
Road CPM Scoping Report & Details Worksheet (Form#0596)	
Statewide Scoping Package Master Checklist – Bridge (Form#0593)	
Bridge Scoping Report & Details Worksheet (Form#0593)	
Statewide Scoping Package Master Checklist – Bridge CPM/CSM (Form#0594)	
Bridge CPM/CSM Scoping Report & Details Worksheet (Form#0594)	
Culvert Scope Inspection (Form#0592)	
Constructability Checklist (Form#1961)	
Bridge Inspection Forms	**C**
Bridge Safety Inspection Form (Form#2502)	
Bridge Analysis Report (Form#0231)	
Detail Beam Survey Report (Form#0267)	
Bridge Underclearance Measurements (Form#1190)	
Diver Inspection Report	C-5
Project Forms	**D**
Traffic Analysis Guidelines	D-1
Traffic Analysis Request (TAR) (Form#1730)	
Scope Project Record Form (Form#0591)	
Scoping Level Crash Analysis	D-4
Preliminary Planning Scoping Letter (Form#2483)	
Contract Request (Form#5105)	

Estimating Tools ..... **E**
Cost Summary Tool (Form#0597)
Call For Projects Bridge Cost Estimate Spreadsheet (Sample) E-2
Bridge Capital Scheduled Maintenance Cost Estimate Spreadsheet (Sample) E-3

Trsn · port Information ..... **F**
Breakdown ID Numbers F-1
Non-Standard Pay Item Numbers F-2

General Information ..... **G**
MDOT Region Offices and Service Centers G-1
Metropolitan Planning Organizations G-2
Rural Task Forces G-3
Funding Codes G-4