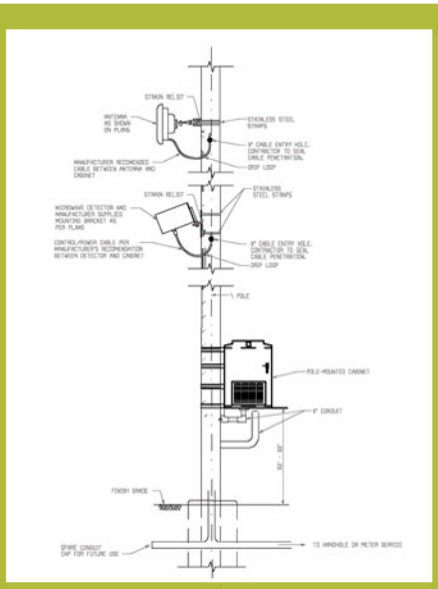

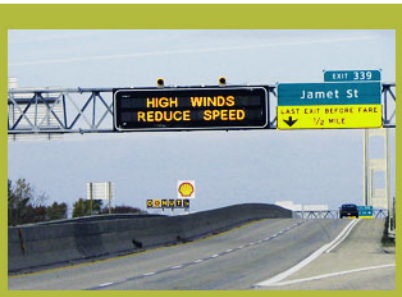

BODD

ITS Project Development and Implementation in Michigan

Basis of Design Document for Developing an ITS Project

Prepared by: HNTB In association with: Kimley-Horn of Michigan, Inc.

Copyright © 2009 by HNTB Michigan. All rights reserved

Table of Contents

1. BACKGROUND AND INTRODUCTION 1

1.1 Purpose 1
1.2 Who Should Use This Guide 1
1.3 How to Use This Guide 1

2. OVERVIEW OF A PROJECT 2

2.1 Funding for ITS Projects 2
2.1.1 Congestion Mitigation and Air Quality (CMAQ) 2
2.1.2 ITS Template 3
2.1.3 Road Template, Safety Template, Others 3
2.2 Programming Documents 3
2.2.1 MI Transportation Plan 3
2.2.2 MPO Long Range Transportation Plan 4
2.2.3 State Transportation Improvement Program (STIP) 4
2.2.4 MDOT Five-Year Transportation Program 4
2.3 Life of an ITS Project 4
2.3.1 ITS Regional Architecture 5
2.3.2 Regional Deployment Plan 6
2.3.3 Concept of Operations 7
2.3.4 Project Scope 8
2.3.5 Design Phase 8
2.3.6 Construction 12
2.3.7 Acceptance 12
2.3.8 Operations and Maintenance 12
2.4 Project Management Tools 13
2.4.1 MPINS 13
2.4.2 MFOS 18
2.4.3 P/PMS 21
2.4.4 MDOT Program Budget Forecaster Application 21

3. SYSTEMS ENGINEERING PROCESS 24

3.1 Steps of the Systems Engineering Process 25
3.2 The Process 27

4. PRE-DESIGN AND SCOPING 28

5. ITS COMPONENTS 31

5.1 Special Provisions 35
5.1.1 IPO Process for Reviewing Special Provisions 36
5.1.1 IPO role with non-approved Special Provisions 36
5.1.2 How to choose the correct options in a Special Provision 37
5.2 Communications 38
5.2.1 Topology 39
5.2.2 Type 40
5.2.3 Maintenance 41
5.2.4 Placement 41

5.3 Field Devices **41**
5.3.1 Closed Circuit Television (CCTV) Cameras *42*
5.3.2 Dynamic Message Signs (DMS) *45*
5.3.3 Environmental Sensor Stations (ESS) *48*
5.3.4 Vehicle Detectors *49*
5.3.5 ITS Cabinet Selection *53*
5.4 Safety Systems **53**
5.4.1 Smart Work Zones *53*
5.4.2 Overheight Warning System *54*
5.4.3 Speed Warning System *54*
5.5 Control Center **54**
5.6 Third Party Data Sources **54**
5.6.1 Detectors/Probes for Speed Data *55*
5.6.2 TrafficLand camera images *55*
5.7 Operations and Maintenance **55**
5.7.1 Maintenance checklist *55*
5.7.2 Operations requirements *55*
5.8 Consultant Services **56**

6. ITS DESIGN RESOURCES **58**

Appendix A – CMAQ Grant Application Form

Appendix B – ITS Project Call and Project Call Response

Appendix C – MPINS and MFOS Screen Shots

Appendix D – P/PMS ITS Tasks

Appendix E – MDOT Architecture Conformance and Maintenance Form

Appendix F – State Contract for "Request for Cell"

Appendix G – Maintenance Checklist for Communication Components

Appendix H – Maintenance Checklist for CCTV

Appendix I – Maintenance Checklist for DMS LED Sign Site

Appendix J – Maintenance Checklist for DMS Flip Disk Sign Site

Appendix K – Maintenance Checklist for ESS

Appendix L – Maintenance Checklist for Detection Station

Appendix M – Overheight Warning System

Appendix N – Speed Warning System

Appendix O – Glossary of Terms

Appendix P – References

List of Figures

Figure 1. Life of an ITS Project 2
Figure 2. Process for Documenting Regional Architecture Conformance 6
Figure 3. Procedure for Developing an RFP 9
Figure 4. Decision Tree for Project Design 10
Figure 5. Conceptual Design Phase Flowchart 11
Figure 6. Example of the Header tab within MPINS 14
Figure 7. Example of CS/PR tab within MPINS 15
Figure 8. MPINS Flow Chart 17
Figure 9. MFOS Flow Chart for Contract Services/Traditional LET 19
Figure 10. MFOS Flow Chart for Purchasing 20
Figure 11. Project Budget Forecast Executive Dashboard 22
Figure 12. Program Budget Forecaster Project Needs Percentages 23
Figure 13. Systems Engineering "V" Diagram 24
Figure 14. Approval process for Special Provisions 35
Figure 15. Network Topologies 39
Figure 16. CCTV Topology Alternatives 43
Figure 17. DMS Topology Alternatives 46
Figure 18. ESS Topology 49
Figure 19. Detection Topology Alternatives 50

List of Tables

Table 1. ITS Regional Architecture and Deployment Plan Documents 7
Table 2. Key Questions to develop High-Level Requirements 27
Table 3. ITS Device Costs 33
Table 4. Responsibilities Matrix SP Review and Approval 36
Table 5. Types of Sensor Available 48

List of Checklists

Checklist 1. High Level Checklist for Design Process 59
Checklist 2. Systems Engineering Checklist 60
Checklist 3. Concept of Operations 61
Checklist 4. Pre-Design and Scoping Checklist 64
Checklist 5. Developing an RFP 65
Checklist 6. ITS Plan Sheet Review Checklist 66
Checklist 7. General Plan Sheet Review Checklist 67

List of Templates

Template 1. Concept of Operations Template 62

List of Acronyms

AADT	Annual Average Daily Traffic
ATMS	Advanced Traffic Management System
BODD	Basis of Design Document
C&T	Construction and Technology
CCTV	Closed-Circuit Television
CE	Construction Engineering
CMAQ	Congestion Mitigation and Air Quality Improvement program
COTS	Commercial-off-the-shelf
CIA	Construction Influence Area
CS	Control Section
CSRT	Central Selection Review Team
DMS	Dynamic Message Sign
DVE	Digital Video Encoder
EPE	Early Preliminary Engineering
ESS	Environmental Sensor Stations
FAA	Federal Aviation Administration
FCC	Federal Communications Commission
FCP	Freeway Courtesy Patrol
FHWA	Federal Highway Administration
FTA	Federal Transit Administration
IPO	ITS Program Office
ITS	Intelligent Transportation System
LAN	Local-area Network
LED	Light-emitting diode
MAP	MDOT Architecture Project

List of Acronyms

MDIT	Michigan Department of Information Technology
MDOT	Michigan Department of Transportation
MFES	Managed Field Ethernet Switch
MFOS	MAP Financial Obligation System
MITSC	Michigan Intelligent Transportation Systems Center
MP Numbers	Mile Post Numbers
MPEG	Moving Picture Experts Group
MPINS	MAP Project Information System
MPO	Metropolitan Planning Organization
MVDS	Microwave Vehicle Detection System
NHS	National Highway System
NTP	Notice to Proceed
NTSC	National Television System Committee
OEC	Omissions/Error Check
P/PMS	Program/Project Management System
PBF	Program Budget Forecaster
PBM	Program Budget Manager
PDF	Portable Document Format
PE	Preliminary Engineering
PM	Project Manager
POTS	Plain Old Telephone Service
PR Numbers	Physical Routes Numbers
PTZ	Pan-Tilt-Zoom
RFP	Request for Proposals
RWIS	Road Weather Information System
SE	Systems Engineering
SEMCOG	Southeast Michigan Council of Governments
SI	Systems Integrator
SM	Systems Manager
SP	Special Provisions

List of Acronyms

STIP	State Transportation Improvement Plan
TDS	Terminal Device Server
TMC	Traffic Management Center
TMS	Transportation Management System
TOC	Traffic Operations Center
TSC	Transportation Service Center
USDOT	United States Department of Transportation
VID	Video Image Detectors

1. BACKGROUND AND INTRODUCTION

1.1 Purpose

This Basis of Design Document (BODD) is intended to collect the experience of current project managers (PM) and document the procedures specific to developing Intelligent Transportation Systems (ITS) projects in Michigan. It is intended to present a single resource for identifying, creating, designing, and implementing transportation projects that include ITS. The document provides an overview of the lifespan for typical projects that include ITS components. The layout of this document is divided into specific sections, with key tools collectively located in **Section 6** so they can serve as user-friendly references for all ITS project managers.

The BODD is geared towards identifying project management resources currently available within and outside of the Michigan Department of Transportation (MDOT). Existing resources will be summarized with references to the source data to create a document that requires limited maintenance, but can be easily modified as processes change and additional resources are identified. As the data assembling continues and more sections are refined, additional checklists and tools will be developed for use by the ITS project managers.

1.2 Who Should Use This Guide

This document is intended to appeal to all ITS project managers, whether they are new to ITS projects or veterans to the process. It also is intended to provide comprehensive guidance to more experienced ITS project managers regarding the use of ITS planning and systems engineering tools developed by the Department. These tools include the ITS Regional Architectures, Deployment Plans, Concept of Operations, Communication Studies, and the ITS Program Office (IPO) budget forecasting tool – Project and Budget Manager (PBM). The document is a central point of reference for accessing the tools necessary for developing a concept into a fully implemented ITS deployment. Some background and educational materials are included, but the bulk of this document will provide the user with checklists and step-by-step procedures for progressing through the various stages of project development and implementation.

1.3 How to Use This Guide

The format of the BODD is an attempt to assemble the knowledge and experience from ITS project managers into a single gateway to existing resources. It is not intended to duplicate existing manuals and references, but to identify those sources and provide a means to more easily access them at the appropriate time in the development of a project. Using this document, the project manager will be able to learn about each step required, access tools that ease the development for a project manager new to ITS, and increase the efficiency of an experienced ITS champion.

The final product is envisioned as an interactive document that guides project managers through the background data and tools based on the type of project they are planning to implement. The documents that the managers are guided toward will include checklists that align with the corresponding flow charts and decision diagrams presented throughout the document. These checklists will provide managers with straightforward guidance on each step along the path of the project life cycle from a concept to a reality.

2. OVERVIEW OF A PROJECT

The life of an ITS project includes several phases. Some of the phases align closely with other transportation projects, where certain ones are specific to the development and implementation of a technology solution. It is important to reference these existing programming documents and tools to ensure that the proposed project will be consistent with the Department's vision and goals. **Figure 1** depicts how the *Life of an ITS Project* parallels the key programming documents and how certain MDOT tools align with each step of the process. It also shows how the systems engineering process aligns to the project development and implementation phase.

Figure 1. Life of an ITS Project

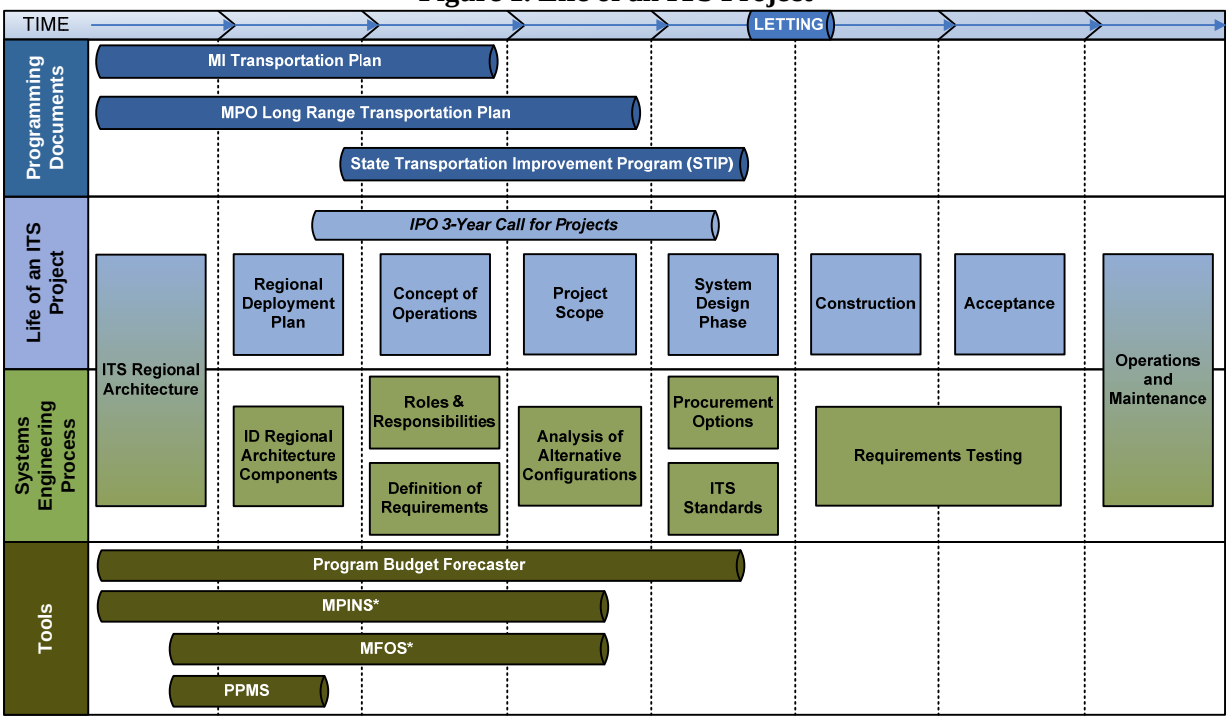

*Modification after initial data entry occurs through Lansing

2.1 Funding for ITS Projects

This section will present an overview of the funding options that may be available for ITS projects. Since these funding sources are not available to every project type, resources and references are included to help project managers investigate the most appropriate source for their project type.

2.1.1 Congestion Mitigation and Air Quality (CMAQ)

CMAQ funding is typically available to air quality non-attainment or air quality maintenance areas via federally funded grants selected and administered by MDOT for certain Metropolitan Planning Organization (MPO) areas and MDOT. Typically, a CMAQ grant application requires information regarding project costs, project limits, and estimates

of the cost per unit of pollutant reduced. An example of a CMAQ grant application is contained in **Appendix A**.

The CMAQ grant application includes a cover sheet and a worksheet. The worksheet will change yearly and a new one is emailed to each regional coordinator. The grant application should be submitted by email to the Lansing CMAQ coordinators. If changes occur within the organization, an email will be sent to the regional coordinators to update them on the new Lansing coordinators. **Currently Pam Boyd and Peter Porciello are the Lansing CMAQ coordinators.** They will work with the designated regional coordinators and can be contacted to answer any questions concerning the process. Additional information or documentation may be needed to fulfill MPO requirements. If a new application is not sent, then the coordinator should contact the Lansing CMAQ coordinators. **Appendix A** also contains guidelines developed by the Southeastern Michigan Council of Governments (SEMCOG) for evaluating and scoring their ITS project.

Only the areas qualifying for CMAQ funding will have a coordinator. The MDOT CMAQ coordinator is different for each region. The eligible CMAQ areas include: SEMCOG and the Grand Valley Metropolitan Council**.**

2.1.2 ITS Template

The ITS Program Office issues calls for projects to regional ITS coordinators. It is envisioned that the projects will derive from the strategic deployment plans as they are completed. An example of the ITS Project Call and Project Call response is located in **Appendix B**. If a project is funded as part of a call, it is programmed as an ITS Template project in MAP Project Information System (MPINS) and MAP Financial Obligation System (MFOS).

2.1.3 Road Template, Safety Template, Others

There are many ITS services that contribute benefits to projects that are part of other project calls. In these instances, if approved, the corresponding template should be used when inputting the project into MPINS and MFOS.

2.2 Programming Documents

Project programming for transportation includes three key levels of development. Michigan's MI Transportation Plan provides a 25 year look at the direction of the Department. The State Transportation Improvement Plan (STIP) and the MDOT Five-Year Transportation Program each provide further detail for projects across the state, but maintain a focus on the overall transportation infrastructure. The MPO Long Range Transportation Plan must include local projects in order for them to be included in the STIP. These programming documents often analyze existing and forecasted conditions and can help in quantifying the definition of a project.

2.2.1 MI Transportation Plan

The MI Transportation Plan, or the State Long Range Transportation Plan, is a 25-year plan intended to guide the Department's growth and change. This document is a high-level look at the connection between the transportation system, economic growth, and the quality of life for citizens. Michigan is one of a few states where the economy and transportation are closely linked. The plan analyzes trends and public input to help steer the Department in the most appropriate direction that will provide an integrated transportation system focused on

the State of Michigan. The current MI Transportation Plan can be viewed at the following link: *http://www.michigan.gov/mdot/0,1607,7-151-9621_14807_14809.html*

2.2.2 MPO Long Range Transportation Plan

The MPO Long Range Transportation Plan outlines the MPO needs over a 20-year span. With cooperation between state, federal, and local agencies, it identifies transportation programs and projects that will be funded with federal aid in accordance with federal law and regulations. The MPO Long Range Transportation Plan (LRTP) is one step in the MPO transportation planning process.

The current MPO LRTP can be viewed at the following link: *http://www.michigan.gov/documents/mdot/MDOT_SLRP_techrept_MPO-RPA_11_14_06_178641_7.pdf*

2.2.3 State Transportation Improvement Program (STIP)

The STIP serves as a four year planning document that provides information pertaining to the State's programs and projects. The project list includes those for roads, bridges, and transit systems located on trunklines, and in local rural and small urban areas. The STIP only references MPO projects, which are included and governed by the corresponding MPO TIP documents. Since small local areas projects are eligible for funding through the Rural Task Force or the Small Urban Program, they are referenced in one line and not individually within the STIP. The STIP also does not include small safety or heavy maintenance projects; they are examined at the end of the year with a careful assessment of the highway system.

The current STIP can be viewed at the following link: *http://www.michigan.gov/mdot/0,1607,7-151-9621_14807_14808.html*

2.2.4 MDOT Five-Year Transportation Program

The MDOT Five-Year Transportation Program captures the Department's approach to building, operating, and maintaining the infrastructure in Michigan. The program helps maintain project deliveries, provide financial strategies, and commitment to the motoring public. The program also helps make government efficient, effective, and inclusive. It encompasses all realms of transportation, including marine, air, transit, rail, and highways. At the end of each year, any existing project information is updated and a new year is added. The document only includes those projects that MDOT can deliver. It does not contain any project managed by local agencies or the county road commission, funded with federal or state funds, or delivered locally. The process lasts a year and involves inputs from local, state, and county agencies. You can view the current MDOT Five-Year Transportation Program at the following link: *http://www.michigan.gov/mdot/0,1607,7-151-9621_14807_14810.html*

2.3 Life of an ITS Project

Figure 1 demonstrates the eight steps outlined along the path of a technology-based project from identifying the need within the Regional Architecture to operations and maintenance of the final system. It is important to recognize the relationship between the project phases: the project programming documents (row 1), the systems engineering process (row 3), and the MDOT project management tools (row 4).

This section will help project managers identify existing planning documents regarding their project and show how to trace back to those documents and pull out project requirements, project rationale and purpose, and project stakeholders. These documents often provide a quality source of background data and analysis that can assist managers in refining the scope and definition of the project.

Each of the existing planning documents presented in the first three steps have a specific level of detail and coordination that the project manager should address. From the vision of the State to the local preferences of the stakeholders impacted by the project, it is important for project managers to identify the possible supporters and players of their project. This initial step can sometimes identify possible partners for funding and support. It also will present any work that may have occurred to date in the vicinity or specifically impacting the project.

2.3.1 ITS Regional Architecture

Every MDOT region is currently covered by ITS Regional Architectures. These documents were developed through extensive stakeholder outreach and involvement and present the identified needs for each region along with user services or market packages that can address those needs. Federal Highway Administration (FHWA) and Federal Transit Administration (FTA) require that any transportation project using federal funds must be included in the regional architecture. MDOT has adopted a process for documenting conformance and modifications to the Regional Architecture and this process is shown in **Figure 2**. As part of the process for reviewing the Regional Architecture, project managers are required to use the Regional Architecture Conformance and Maintenance Form (**Appendix E**) presented in **Section 3** to document any additions or changes to the Regional Architecture.

Figure 2. Process for Documenting Regional Architecture Conformance

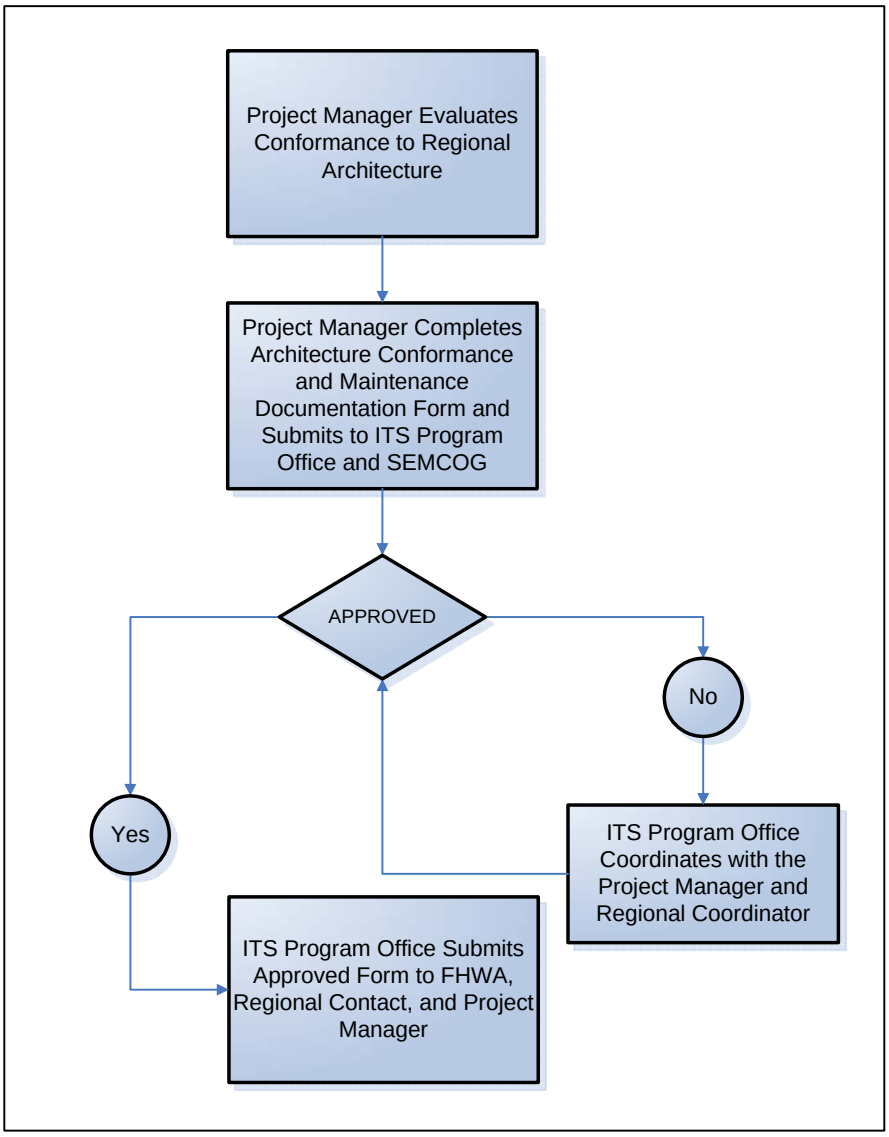

Note: SEMCOG Region may have additional steps.

2.3.2 Regional Deployment Plan

Most of the MDOT regions also have regional deployment plans that outline ITS projects based on the feedback from the involved stakeholders. The cost-to-benefit ratio for most of the projects was evaluated to help MDOT when programming projects across all seven regions. Similar to the ITS Regional Architecture, the Deployment Plan captures input from a range of stakeholders and should be referenced early in the project development. Not only does it identify possible partners for each project, but it also will provide some high-level data to help support the implementation of projects identified within the plan.

SEMCOG, which includes the Metro Region and three counties in the University Region, is currently undergoing an update on the ITS Regional Architecture and the creation of a Regional Deployment Plan. The existing Regional Architecture is available in an HTML

format on the Internet. Portable Document Format (PDF) versions of the documents for several of the other regions also are available on the Internet and can be found at the addresses listed in **Table 1**.

Table 1. ITS Regional Architecture and Deployment Plan Documents

Region	*Regional Architecture*	*Deployment Plan*	*Date Completed*	*Link*
SEMCOG Region	**X**		*January 2003*	http://www.semcog.org/TranPlan/ITS/intro.cfm
Updated SEMCOG Region	**X**	**X**	*November 2008*	http://www.mdotitsplanning.com/
Southwest and Portions of the University Region	**X**	**X**	*January 2008*	http://www.mdotitsplanning.com/
Grand Region Excluding Grand Rapids	**X**	**X**	*January 2008*	http://www.mdotitsplanning.com/
Grand Rapids Metro Area ITS Strategic Deployment Plan		**X**	*February 2006*	http://www.gvmc.org/transportation/ITS.shtml
Bay Region	**X**	**X**	*January 2008*	http://www.mdotitsplanning.com/
North Region	**X**	**X**	*January 2008*	http://www.mdotitsplanning.com/
Superior Region	**X**	**X**	*January 2008*	http://www.mdotitsplanning.com/
Tri-County – Lansing	**X**	**X**	*December 2001*	http://www.tri-co.org/pdfs/ITS%20Architecture%20Document.pdf http://www.tri-co.org/pdfs/FR1_Mich%20Predeploy_Sect%207_Lansing%20Sector.pdf
Statewide Architecture	**Available Soon**	**Available Soon**	*October 2009*	http://www.mdotitsplanning.com/

2.3.3 Concept of Operations

It is important for the project manager to understand the requirements of operating ITS deployments once implemented. Installing closed-circuit television (CCTV) cameras or dynamic message signs (DMS) require personnel that will either view the images or activate messages on the signs. The Concept of Operations is the crucial step that assists the PM in identifying those needs and who will fulfill those needs. Some experience can be gained from discussions with other regions, but a clear understanding of the goal and how that goal will be accomplished should be derived from the stakeholders that are looking to implement the ITS project.

A Concept of Operations is a document that outlines the intended purpose of a system upon completion. It includes a detailed account of who will operate and maintain the components

of the system, what data will be collected and shared, who will want access to the data collected, and the high-level requirements of the system. Not all projects will require a Concept of Operations. If a process already exists in a region and has a Concept of Operations, then a new project extending the existing operations and using the same process would only need to reference the existing Concept of Operations. For example, a regional Road Weather Information Systems (RWIS) project Concept of Operations will cover all other RWIS projects within that Region. However, if a Concept of Operations has not been prepared for the project or the project is a new project entirely, preparing this document is not only an important step in the development of an ITS project, but it also is required in the Systems Engineering process presented in **Section 3**. Guidance on the development of the "Concept of Operations" also is presented in **Section 3**.

2.3.4 Project Scope

Once a Concept of Operations has been developed for the system, it becomes the project manager's responsibility to define a clear scope for the system. As part of the scope, the project manager must begin evaluating numerous technological options along with defining an initial approach to the density and complexity of the system. These decisions often are driven by the available capital funds, but also can be derived from the operations and maintenance requirements outlined in the Concept of Operations. The project manager will need to identify all potential budget components of the project including costs beyond design and construction. The potential components or stages include design, construction, systems integration, system management, construction engineering (CE), and operations and maintenance. Project managers need to accommodate costs associated with the review of special provisions from outside vendors. An on-call contract for assistance in the review of project special provisions will be managed by the IPO, but the actual cost to review the specifications should be accommodated through the project budget. Adequate consideration of the phases will ensure proper funding is available to successfully complete the project. Additional information about each of the phases is discussed in the following sections. Resources required upon completion of the project can be a key decision factor while scoping a project.

The project manager is urged to rely on the decisions captured in the Concept of Operations to help in developing a clear scope prior to progressing into the design phase of the project. Effective time spent on scoping the project will aid in reducing project overruns on budget and schedule during the design and implementation.

2.3.5 Design Phase

Since a significant number of the ITS projects designed in Michigan are completed through consultant services, it is important for the project manager to understand the process for developing a Request for Proposals (RFP) and getting a consultant under contract. A checklist that corresponds to the overall process of selecting a consultant and establishing a contract is provided in Section 6. **Figure 3** outlines the steps involved in this process.

Figure 3. Procedure for Developing an RFP

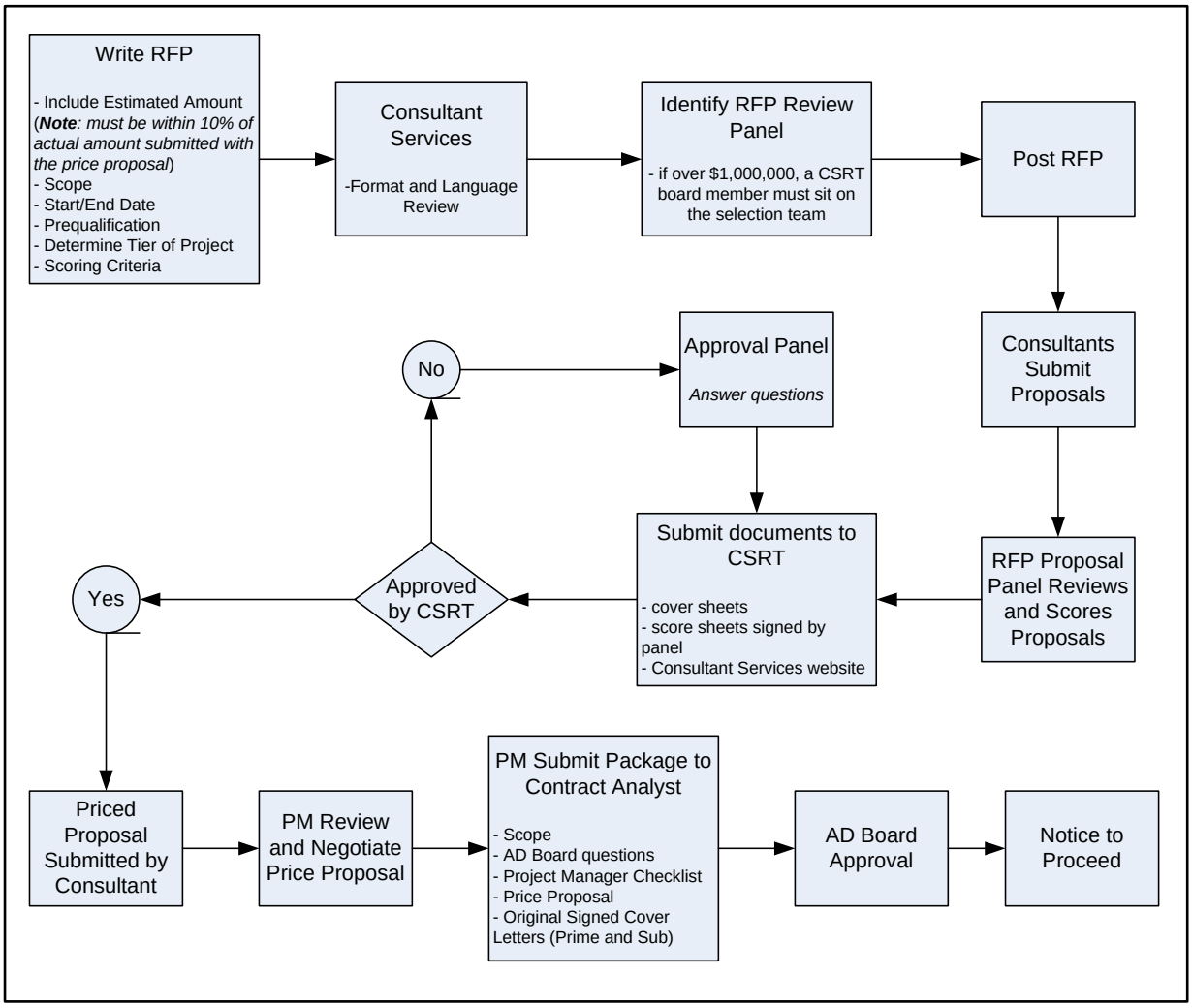

Whether the system design is accomplished through the use of a consultant or by MDOT designers, all MDOT projects follow a similar process for design. Also, MDOT needs to decide whether it is design build or design-bid build early on in the process without a consultant stating otherwise.

Figure 4 shows the steps needed to achieve a plan set that can be available for Letting. An inset of this process, the preliminary design phase is shown in **Figure 5**. Times are not identified for each of the tasks as they would vary depending on the complexity of the project.

Figure 4. Decision Tree for Project Design

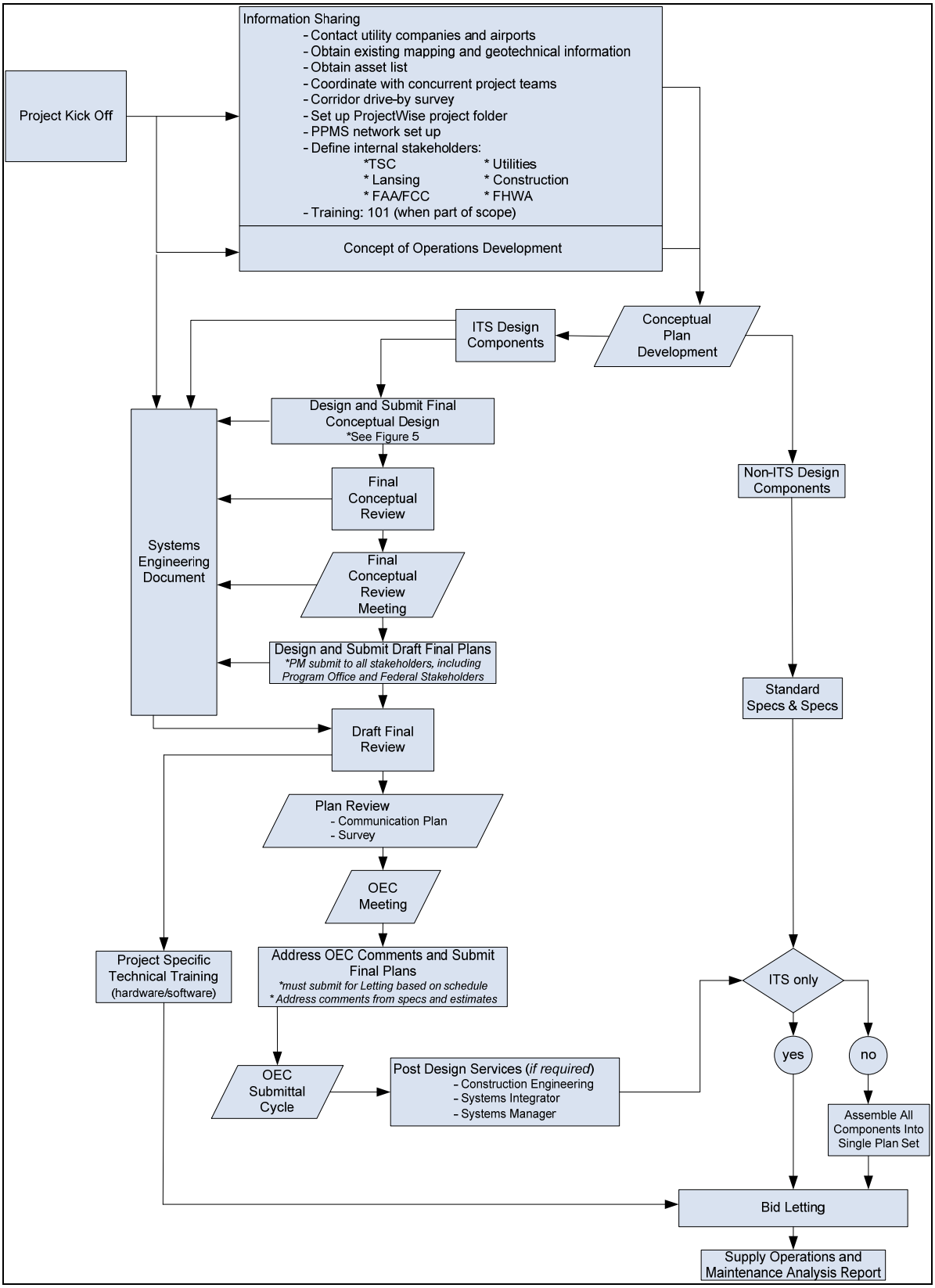

Figure 5. Conceptual Design Phase Flowchart

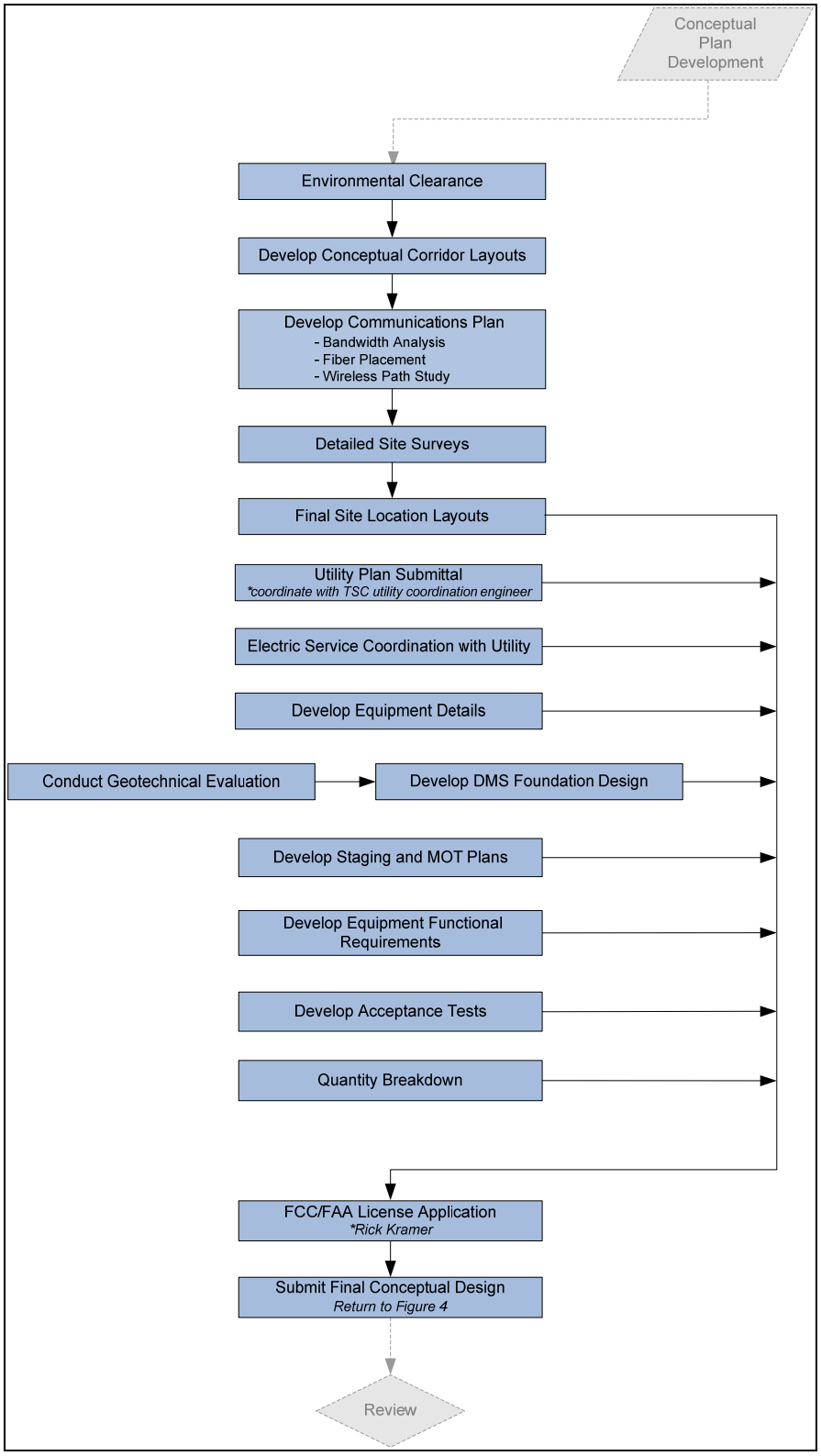

2.3.6 Construction

The construction timeline varies greatly depending on the type of project being constructed. Software integration projects can span years as each phase is deployed and tested against the requirements. Field device installations can occur more quickly if they are an extension of an existing traffic management system. During the construction of an ITS project, there are typically several iterations of testing and acceptance from a device, sub-system, and overall system level. This process and guidance on requirements testing is presented in more detail as part of the systems engineering process in **Section 5**.

During the construction phase, consultants can be contracted to provide additional services including construction engineering (CE), systems manager (SM), and systems integrator (SI). The CE contract allows the consultant to oversee the implementation or construction of the system and provide feedback to the Department concerning design and construction decisions. This CE portion of a project is typically 5% to 7% of the overall contract amount.

The SM can be either contracted as part of the construction contract or as a separate contract. The SM portion of a project is typically 7% to 10% of the overall project amount and provides more direct oversight of the implementation. Acquiring an SM during the implementation of an ITS project allows for the use of a single firm selected on the basis of qualifications. The SM is responsible for all system design, software development and integration activities.

Although the SI can be done as a separate contract, it is typically included within an overall contractor contract. The SI is similar to the SM except that the integrator is not involved in the planning and design stages of the project. The SI is responsible for overseeing the integration of field devices into sub-systems and further integration into the overall system, but is not involved with the provision of equipment, electrical contracting and construction.

2.3.7 Acceptance

Similar to other phases of project management, the intricacy of the acceptance testing is directly related to the complexity of the project. The testing plan is developed during the Systems Engineering process and should be closely followed to ensure that the resulting system meets the initial needs identified by the stakeholders. The testing and acceptance of ITS projects occurs in several phases. Installations are typically tested at the device and sub-system level first to ensure that the technology is functioning accurately. Secondly, the overall system is validated against the initially outlined requirements of the system. Unlike a typical roadway project, the acceptance process can require a significant investment from the project manager.

2.3.8 Operations and Maintenance

Similar to other infrastructure projects, it is important to identify appropriate resources for the ongoing operations and maintenance of the proposed system. Some projects will introduce a new skill set to a region that requires training for the personnel identified. Along with staffing requirements, it also is important to accurately forecast the appropriate amount of funding to support operations and maintenance. The cost of expanding an existing traffic management system can result in a slight increase to the existing budget, versus the implementation of a new system which would require the establishment of the funding source and identification of funds. At the completion of each design, a statement of impact with detailed information along with the maintenance schedule shall be supplied to MDOT.

2.4 Project Management Tools

MDOT currently provides four key project management tools to each project manager. Two of these tools — MDOT Architecture Project (MAP) Financial Obligation System (MFOS) and MAP Project Information System (MPINS) — are part of the overall Transportation Management System (TMS) that was developed by the Department. These two tools feed data into an overall decision support system that drives the project prioritization processes within MDOT. The third tool, Program/Project Management System (P/PMS), was developed to help manage the process of scheduling and reporting projects through preconstruction. The fourth tool, the Program Budget Forecaster (PBF) tool, was developed specifically for the ITS Program Office to aid in managing a limited budget and prioritization of ITS projects. Maintenance of the data within these four systems will prove crucial throughout the life of a project. This section will present the available tools for tracking and managing the ITS project through planning, designing, and construction. It includes guidance for using TMS tools: MPINS, MFOS and P/PMS along with the new MDOT PBF Application.

As noted in **Sections 2.3.4** and **2.3.6**, adequate consideration towards each of the different stages associated with the project will ensure successful completion of the project. A specific budget amount should be associated with each stage for ease of input into each of the project management tools.

Resources for additional information about the TMS can be found at:
http://mdotwas1.mdot.state.mi.us/public/tms/

2.4.1 MPINS

MPINS functions as an interface for users to enter, maintain, and retrieve project data stored on the MAP database. It is the first of two systems that MDOT uses in the planning, monitoring, scheduling, and funding of projects through construction. The job number is assigned in MPINS.

Before job information is entered into MPINS, project managers must confirm support for the project. They would initiate a call for projects to the local MPO and/or verify projects within the STIP to determine approved projects and acquire funding through federal, state, or local funds. Once both have been approved, project managers can enter the applicable information into MPINS.

Once logged into MPINS, the first screen displays requested information pertaining to the "concept". Project managers will need to enter the required information. **Figure 6** displays the Header tab of the initial page within MPINS. **Figure 7** displays the information for the second tab (CS/PR) within MPINS. The list below is an example of some of the most common information needed, additional information may be required.

Please note that MPINS includes a new Vendor Indicator field, update notice 10/14/08. The screenshots in Appendix C does not include this field.

- Limits
- Location
- Funding Source
- Phase A or C
- National Highway System (NHS)

- Project Manager
- Milepost Numbers (MP Numbers)
- Physical Route Numbers (PR Numbers)
- Control Section (CS)
- County
- Urban areas

Appendix C displays additional screen shots of the "concept" tabs along with examples of screen shots displaying project information already entered into MPINS.

Figure 6. Example of the Header tab within MPINS

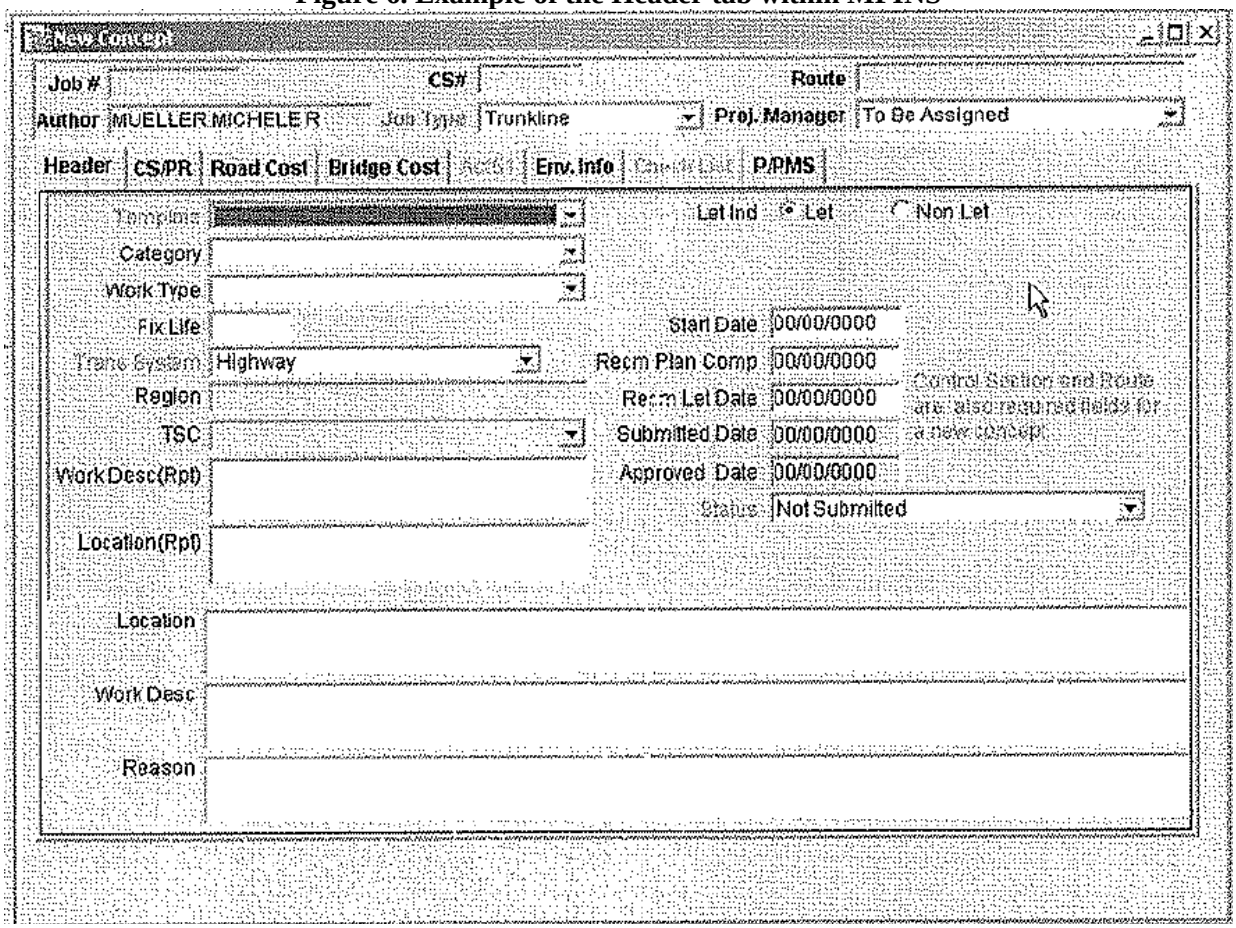

Figure 7. Example of CS/PR tab within MPINS

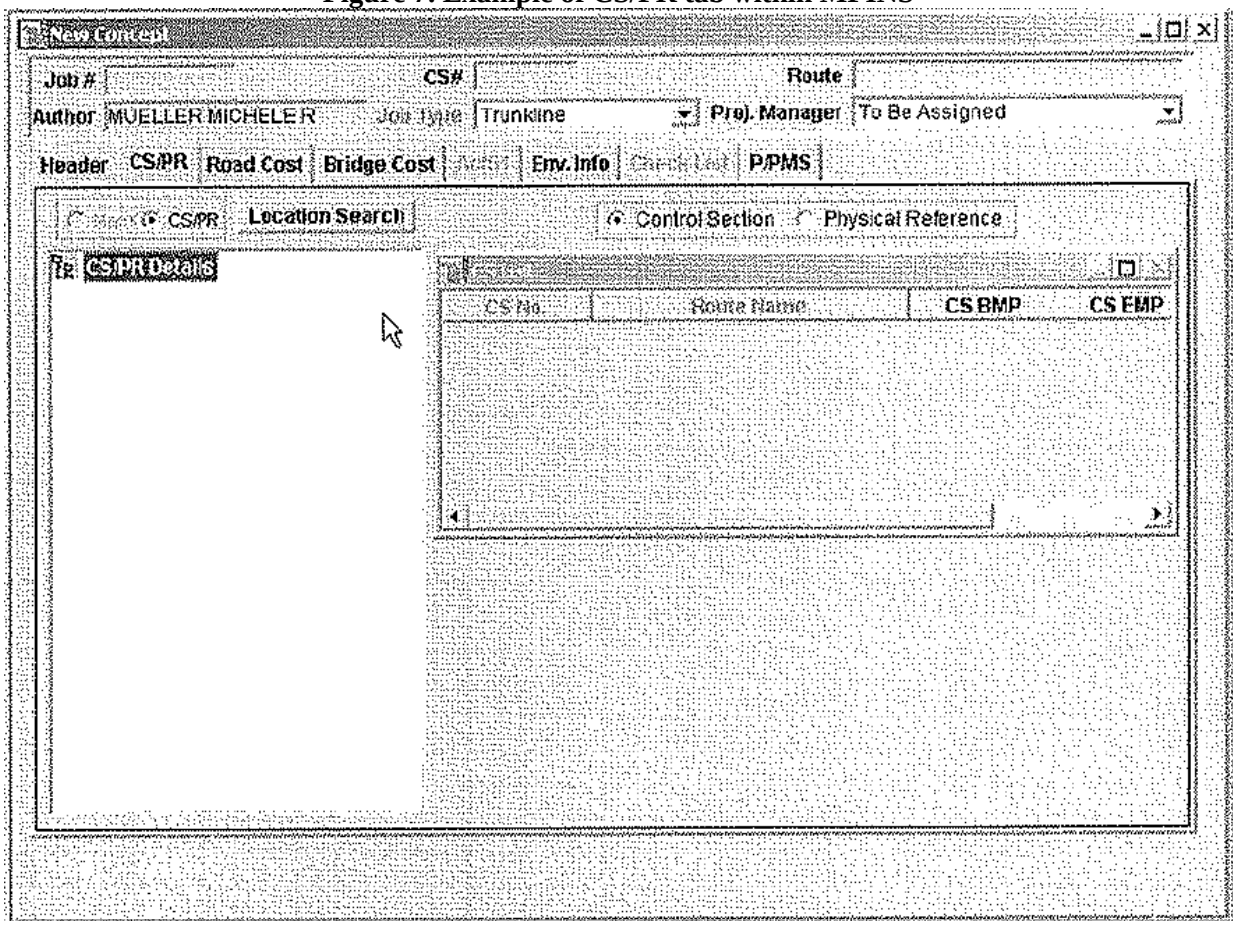

The typical funding sources for ITS projects include the ITS Template, CMAQ and Road Template. The PR numbers represent region wide numbers. Also, the control section (CS), PR Numbers, and the MP Numbers have standard regional numbers that are used. The CS can be found in "The Control Section Log" book along with the PR Numbers at the following web site: *http://www.mcgi.state.mi.us/prfinder* (PR Finder). Besides the intranet, the MP and PR numbers can be found in a book or database.

Phase A refers to construction and construction engineering funds. Phase C encompasses design/preliminary engineering (PE), system manager, and early preliminary engineering (EPE) monies. A percentage or an approximate amount of money can be designated to either phase. Additional information regarding the difference between the two phases is presented in **Section 2.4.2** below. Note, B Phase involves Right-of-Way, and is rarely designated during an ITS project.

A job number will be populated as information is entered into the system. There is no designated amount of information or a preset order of filling in the information that will influence when the job number is populated. However, it is important to **WRITE** this number down. If not recorded, then the number will be nearly impossible to retrieve. The numbers are assigned sequentially and if the previous number is known, then a search and retrieval of the number can be done easily; otherwise, the entire process will need to be redone and the information entered again. Please remember the database can be bogged

down when duplicates of projects are entered into the system. Diligence should be used and the assigned number written down and stored in a safe location before submitting the job.

Once the necessary information has been entered, the project can be submitted (again, after the job number has been written down). The concept will be reviewed in the Central Project Planning Office in Lansing. On the concept page, the status of approval will be changed to "in review," "approved," or "not approved." The approval process may take weeks. If the concept is approved, the project information will need to be populated with additional information, such as engineer names. Once the "Request of Project Initiation" has been approved, it becomes a job and information then will need to be entered into MFOS to obligate the project or portions of it. Note: The designator may have been changed based on Lansing's way of tracking assigned money. If the concept was not approved, then the errors will need to be fixed and resubmitted. Once it is finally approved, MFOS is the next step.

Remember, MPINS is a system to track information per project, not money detail.

Figure 8 shows the flow of information through MPINS.

Figure 8. MPINS Flow Chart

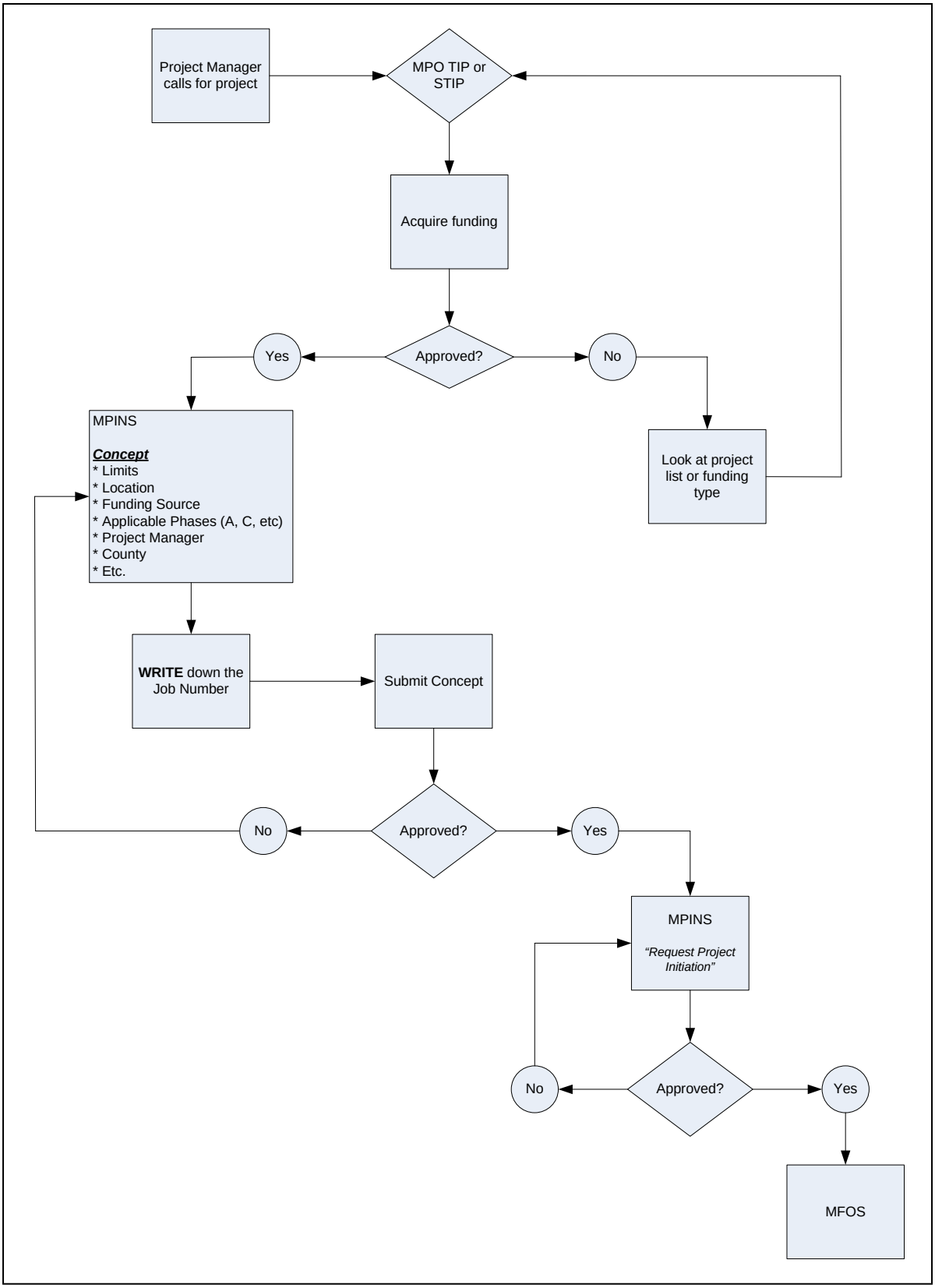

2.4.2 MFOS

MFOS serves as an interface between MDOT and FHWA in obligating funds for projects. It is the second system that MDOT uses in the planning, monitoring, scheduling, and funding of projects through construction. Once the "*Request for Initiation*" is approved, MPINS tells MFOS that it is a job. MPINS can send data to MFOS, but not vice versa.

Once logged into MFOS, the first screen displays requested information regarding the **A phase (A-Initial) and C phase (C-Initial)**. Note: in rare occasions a project could have funds in both A phase and C phase requiring information to be entered into each. However, information is entered into C phase prior to the A phase.

C-Initial

1. Click on each of the line items
    a. Designate 100% to: Transit, State Forces, or other category that may be appropriate and aligned with the project. There is no ITS choice at this time.
    b. Answer yes or no if the project has federal participation
    c. Fill in the amount of the contract.
    d. Additional information will need to be entered. Follow each tab until all relevant information is completed.
2. Submit for obligation. The project manager needs to make sure the job is in the STIP. Any initial changes would need to be submitted to the Program Control.
3. Program Control approves the money for obligation. The next step is to write an RFP.

C phase is recommended for design, system manager, system integration, and EPE monies.

For additional information pertaining to the development of an RFP, refer to **Section 2.3.5**. **Appendix C** contains examples of screen shots with project information recorded.

A-Initial

- **Consultant Services**. This step is for non-Let projects. The money is obligated like C phase (see below).
- **Contractor Services**. This step is for Let projects. The money is obligated at the time of Letting. It goes through the formal bid process. Once the job is Let, the Delivery Engineer takes charge of A phase. He or she will develop an RFP for Construction Engineering (CE) or will perform these services in-house.

*A phase i*s recommended for "hard construction" and for CE money. Systems Integration is typically a part of *C phase*. If neither *A phase* nor *C phase* applies to the current project, then the Program Office will need to be contacted. Also, if any questions or issues arise while entering information, then the Program Office should be contacted.

Figure 9 through **Figure 10** displays the flow of information through MFOS for each: Contract Services/Traditional LET and Purchasing.

Figure 9. MFOS Flow Chart for Contract Services/Traditional LET

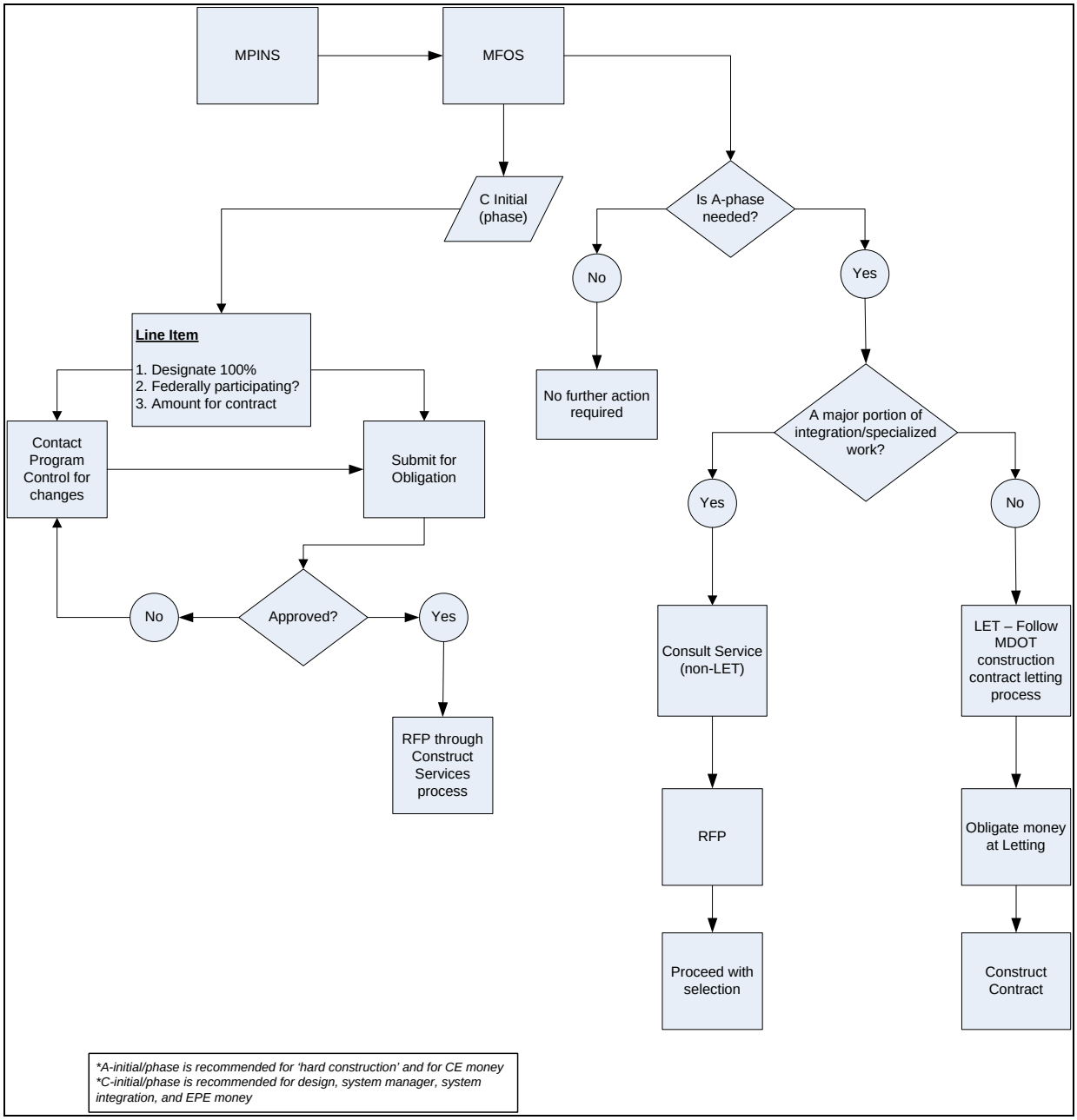

Figure 10. MFOS Flow Chart for Purchasing

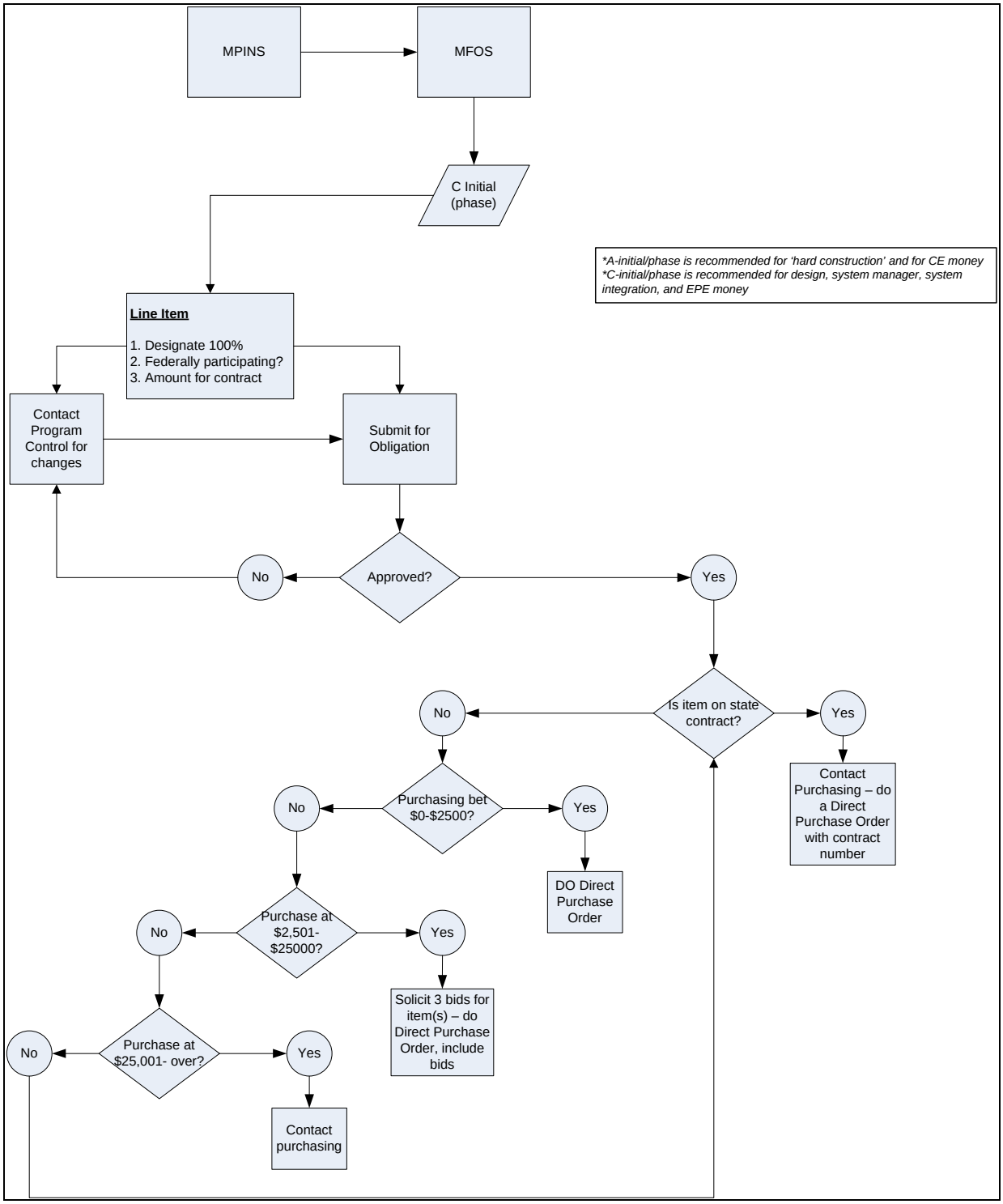

2.4.3 P/PMS

It was noted in the P/PMS Manual that MDOT recognized the complexity of the preconstruction phase and thought it would be best to have a structured system to help. P/PMS was developed to do just that. It helps manage the scheduling and reporting of the projects through preconstruction. It also is used to track a project manager's decision process. It helps identify due dates and keep the manager on task. The system will report when the Let date is near. P/PMS is only used from the RFP through the Letting of the project.

The project manager does not log-in to P/PMS until the money has been obligated for the project in MFOS, an RFP has been completed, and the design schedule has been negotiated. While in the system, a network is developed. Days are assigned to certain tasks as an estimate of the length of time it would take to accomplish those tasks. The Let date is acknowledged as well and cannot be changed within P/PMS; it is changed in MPINS using Form 2604. This will help the project manager stay on tasks. The system will flag overdue tasks. In addition, it will let the project manager know how much time is left before the Let date. Currently, there may be an overabundance of ITS tasks to choose from. The Project Manager may need to delete tasks that are not relevant to the project. **Appendix D** has a listing of P/PMS ITS tasks from which to choose.

2.4.4 MDOT Program Budget Forecaster Application

The Program Budget Forecaster (PBF) is a web-based lifecycle management system. The system documents and manages the following life cycle of a project: Planning, Design, Construction, Operations, Maintenance, and finally, Replacement. PBF generates a statewide ITS program project prioritization based on needs, requirements, funding and special situations as directed by MDOT. The system provides management and reporting functions for all MDOT ITS projects or other projects the MDOT ITS Project Manager wishes to include. PBF can be accessed at the follow web address.
http://pm.michiganits.com/

The PBF system includes information on:

- Project Health
  - Budget and Cost
  - Schedule
  - Track key performance indicators by project
- Program Forecaster
  - Dashboard view to track program performance
  - Generate reports that summarize project information from multiple data sources (maintenance, replacements, infrastructure, services and total needs)
- Program Operations & Maintenance
  - Track Project Assets
  - Lifecycle Management
  - Trend Analysis (larger projects)

The PBF project template includes all of the Job Number data including; date, date of initial contract, job number, job description, contractor/consultant, funding source, phase, region, total budget, spent to date, percent of balance, and space for project issues that may affect

schedule or budget. It also includes a documents section for active responses to project issues, a project schedule and a link to full project schedule software. Individual project details are entered into the system and combined with information on state and budget to generate project and overall program "forecasts."

The Executive Dashboard Forecaster can be used to generate reports from this information for print or to import to Microsoft Office Excel. The PBF system is designed to assist MDOT in tracking the progress of ITS programs and indicate their status. The Executive Dashboard Forecaster graphs the amount of money that will be spent on projects, including:

- Project Forecast – takes into consideration yearly maintenance costs
- Replacements – cost to replace equipment that has reached end of life
- Infrastructure – cost to deploy infrastructure equipment
- Services – cost of operations-based activities not involved in construction
- Needs – total cost of previous three components
- State Budget – yearly amount budgeted to the MDOT ITS program

Figure 11. Project Budget Forecast Executive Dashboard

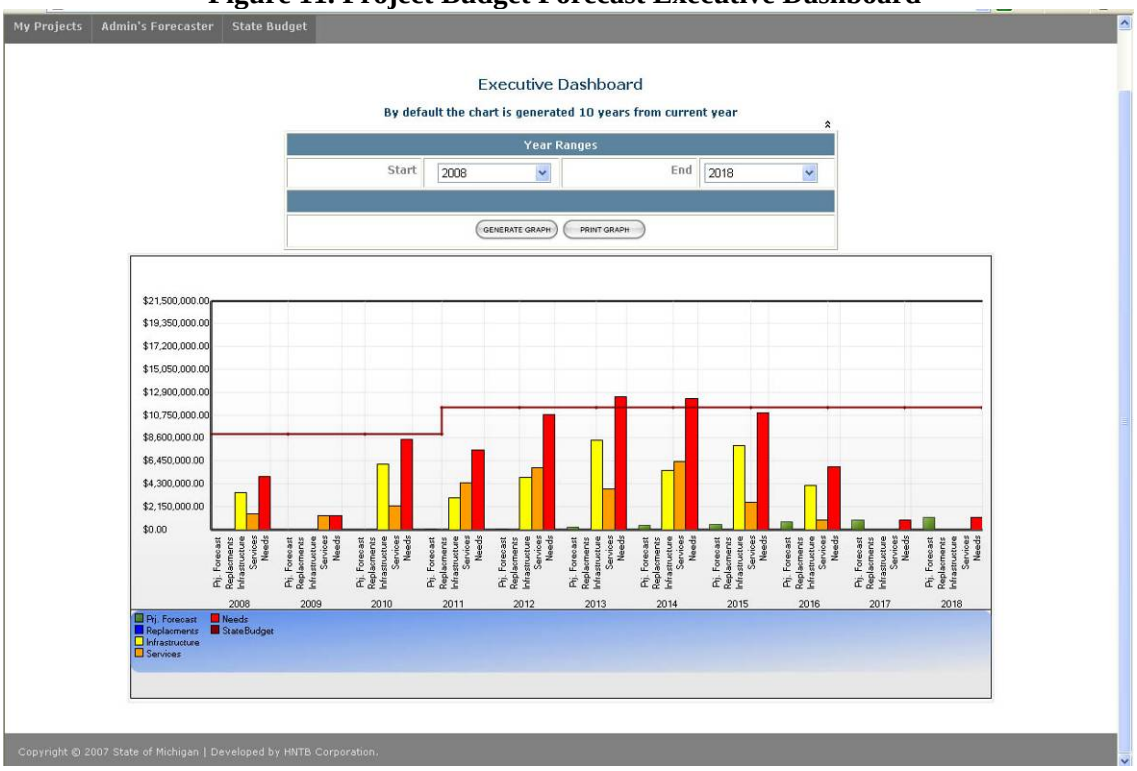

If yearly expenditures are expected to be over budget, PBF breaks down the top five projects by cost, illustrating what percentage of the budget is being used for each project.

Figure 12. Program Budget Forecaster Project Needs Percentages

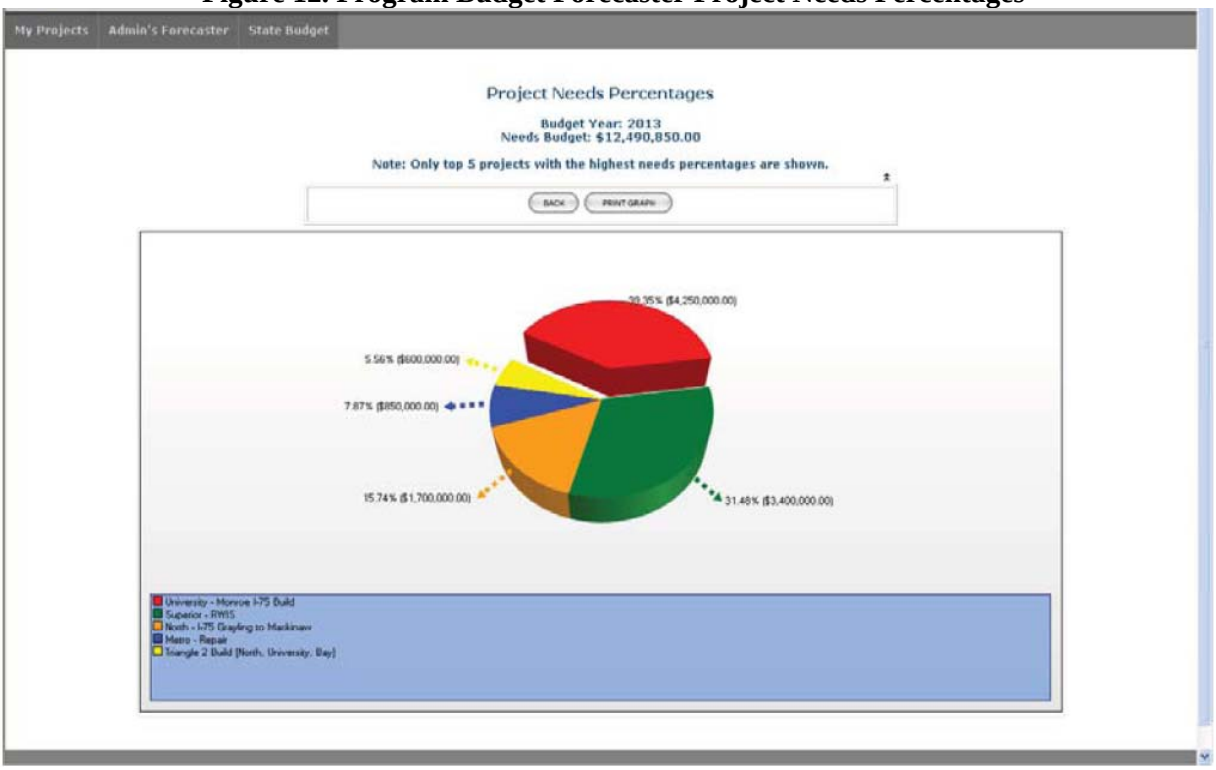

MDOT has found the organizational and forecasting capabilities of the PBF tool to be a useful fit for the ITS program. As ITS continues to grow as a major component of the way state DOTs do business, so will the processes involved in completing ITS projects, including the ways that they are tracked and managed.

3. SYSTEMS ENGINEERING PROCESS

The systems engineering (SE) process is a proven approach to developing technology implementations such as intelligent transportation systems (ITS) projects. The process includes several key steps that consider the full lifecycle of the proposed project (from planning through operations, maintenance, and eventually replacement). Both the FHWA and the FTA have formally adopted regulations requiring that "All ITS projects funded by highway trust funds shall be based on a systems engineering analysis." The SE process has been shown to decrease risk; reduce schedule and budget overruns; and deliver final systems that meet the initially outlined objectives of the system.

The systems engineering process recommended for use in Michigan follows the approach defined in the USDOT Guidebook for Systems Engineering for Intelligent Transportation Systems, which can be found on the publications portion of the FHWA web site (*http://ops.fhwa.dot.gov/publications/seitsguide/*). The process is depicted in the "V" diagram and is shown in **Figure 13**.

Figure 13. Systems Engineering "V" Diagram

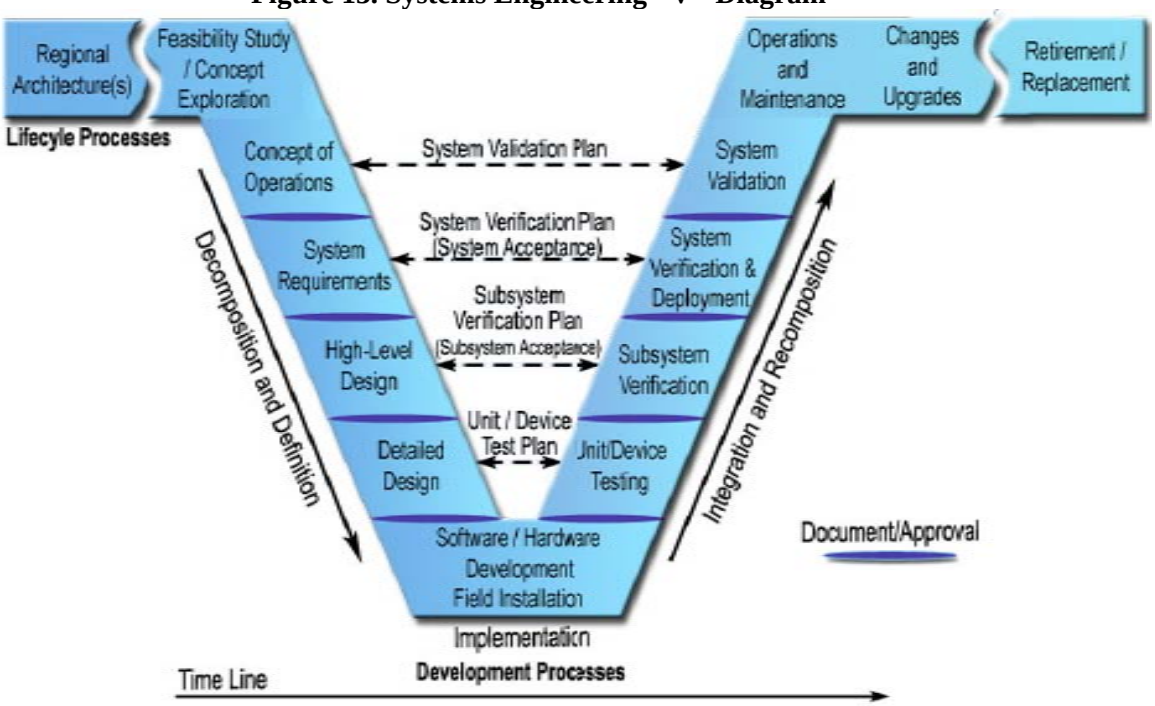

Source: USDOT Systems Engineering for Intelligent Transportation Systems, January 2007

Additional Resources for the Systems Engineering process include:

- FHWA SE Guide (*http://ops.fhwa.dot.gov/publications/seitsguide/*)
- FTA Policy and FHWA Rule Federal Register (*http://ops.fhwa.dot.gov/its_arch_imp/policy.htm*)
- CA SE Guide (*http://www.dot.ca.gov/research/docs/se_guidebook_ver1-12_14_05.pdf*)
- *www.incose.org*

3.1 Steps of the Systems Engineering Process

Along with following the systems engineering process, it is important that each step is documented throughout the project development. Row 3 of **Figure 1** depicts each of the phases that need to be documented and how these phases align with the life of an ITS project. The level of detail incorporated in the systems engineering documentation is required to be commensurate with the complexity of the project. The following section will provide guidance to the project manager on developing appropriate documentation.

1. **Develop a Regional Architecture.** This is the first step for any agency that intends to use federal funds for the implementation of an ITS Project. The development of the architecture also brings the regional stakeholders together and helps to identify the preliminary players for a project. This is the first step in the systems engineering process, but also is the first opportunity to identify and prioritize projects for a region.

2. **Identify portions of the Regional Architecture that will be implemented as part of the project.** Once a project is identified for implementation, it is important to map the project back to the Regional Architecture and determine what portions of the architecture will be developed. The Regional Architecture Conformance and Maintenance Form (**Appendix E**) developed in January 2008 will guide the project manager through identifying each of the regional architecture components that may be impacted by the identified project.

3. **Develop Stakeholder Roles and Responsibilities as part of the Concept of Operations.** Documentation of the stakeholder roles and responsibilities confirms the participating agencies' understanding of the proposed system including the operations, maintenance, and careful consideration of costs with respect to staffing, resources, and day-to-day functions for existing services, new services, and procurement services. The roles and responsibilities for each will need to be determined and agreed upon. Refer to **Section 6** for the Concept of Operations Checklist and Template.

4. **Develop the definition of requirements as part of the Concept of Operations.** The Concept of Operations document provides the project manager an opportunity to ask several questions that will guide the eventual design and implementation of the proposed system. The definition of requirements should be developed from the needs and objectives identified during the development of the regional architecture. The requirements are refined at this point to state what the final system should accomplish and will guide the detailed design and implementation. The document should anticipate near, medium, and long term operations & maintenance (O&M). Near term refers to O&M before 3 years of the deployment. Medium term is between 3-5 years of deployment, and long term refers to over 5 years after deployment. Refer to **Section 6** for the Concept of Operations Checklist and Template. **Table 2** provides some questions that will help agencies develop the high-level requirements for a project.

5. **Analyze alternative configurations as part of the project scope.** Since technology is continually changing and regional architecture is developed at a technology agnostic level, the project manager is required to research and evaluate alternative configurations for the proposed system. This analysis includes communication alternatives, device alternatives, and a design of the overall project level architecture of the system. This analysis aids in developing the project scope and will carry over into the detailed design of the system.

6. **Identify procurement options during the System Design Phase of the project.** All public agencies have specific limitations on procurement options that can be further complicated when using federal funds. It becomes important to identify the procurement method of the proposed system so these limitations are understood and accommodated during the design phase. For example, a "low bid" procurement option often requires more stringent specification to ensure that the system will be the initial requirements identified.

7. **Identify applicable ITS Standards during the System Design Phase of the project.** ITS Standards are initially identified during the development of the regional architecture, and should be referenced and incorporated in the design of the system. These standards provide guidance for successful integration with other systems.

8. **Requirements testing will measure the effectiveness of the system prior to acceptance.** The testing procedures are mapped to the high level and detailed requirements outlined earlier in the systems engineering process. As shown on both sides of the "V," there are testing and validation steps on the right that correlate to each of the project development and design steps on the left. Without the testing and validation phases of the systems engineering process, the level of work put forth during the project development becomes negligible and final system will likely not address the needs and objectives initially identified.

9. **Operations and Maintenance roles and responsibilities as outlined in the Concept of Operations will guide the life cycle of the system.** These roles and responsibilities should include the day-to-day operations, the preventative maintenance, and replacement or upgrade procedures for when the system becomes outdated. As a reminder, the information pertaining to personnel, maintenance, and operations & maintenance costs should have been identified and agreed upon within step three and four. Difficulties arise if these components are not clearly defined early and as a result become an afterthought of the project development.

Table 2. Key Questions to develop High-Level Requirements

Area	Key Questions
Needs Analysis	• What is wrong with the current situation? • What needs does the ITS project fill? • Have we clearly articulated the need? • Do all ITS project stakeholders have a common understanding of the project's goals and objectives?
Concept of Operations	• Is our concept consistent with any Architecture(s) with which it must interact? • Have we identified all intended users of the ITS? • How will each intended user interact with the ITS? • How is this different from the current situation, if at all? • Do the intended users understand their role in the ITS? • Have we coordinated with all other agencies affected by this ITS?
Requirements	• What specific functions will this ITS project perform? • Have we defined each function in detail? • Have we identified all system interfaces? • Are all system interfaces well defined? • Have we defined our required system performance in quantifiable terms? • Have we reviewed all requirements with stakeholders? • Have we considered system availability requirements? • Have we assessed our reliability and maintainability requirements? • What derived requirements must we validate with our customer(s)? • Have we considered what security our system needs?
System Architecture	• What are the components of the ITS (e.g., TMC, ATIS)? • How does this ITS fit in with others in the region? • Is there an existing regional or project architecture based on the National ITS Architecture?

3.2 The Process

Checklist 2 in **Section 6** will guide the project manager through each of the defined systems engineering steps. Links to existing documentation and sources are included within the checklist.

4. PRE-DESIGN AND SCOPING

An ITS project is comprised of several elements. These elements, either in the field or in a control center, may operate independently or together, and often communicate directly with a transportation management center (TMC) or traffic operation center (TOC). Before the devices and communication methods are chosen, the goals and objectives of the project must be clear. The following steps should be followed when planning an ITS project.

1. **Assemble Results from the Systems Engineering Process.** Collect the Concept of Operations, ITS Regional Architecture components, Deployment Plan project information and the High Level Requirements that were developed or derived during the SE process.

2. **Determine if the project requires an interim or a full ITS design.** There are two types of ITS design projects, a full design and an interim or add-on design. A full ITS design includes all elements necessary to create an operational system. This type of ITS design may be constructed independently or may also be constructed as part of another transportation infrastructure project. The difference between a full design and an interim or add-on design is that the full design includes all of the elements required for a system to be operational.

   An interim or add-on design is selected when there is a fiscal or operational benefit to constructing a portion of a system that may not be 100% operational upon completion of the specified project. Most of these projects are added to currently funded transportation projects that cover key routes within the regional architecture. The project manager decides to construct the project at this time based on a recognized benefit of minimizing the overall cost of the project and impacts to drivers. Examples of projects that would benefit from this approach include:

   - Installation of conduit with any road project
   - Installation of communication (radios in equipment cabinets or fiber along key corridors) before it can connect to the communications backbone
   - Installation of field devices that will eventually connect to a fiber backbone using a dial-up connection in the interim

3. **Inventory Existing ITS Elements.** The next step is to inventory the existing ITS elements in the project vicinity. The vicinity and the level of detail for the inventory will be defined based on the high-level requirements for this project. Before a new ITS system can be designed, it is important to take an inventory of the existing ITS elements in the vicinity. The vicinity is based on the study area for the proposed project and the areas outside the study area impacted by its final implementation. The purpose of the inventory is to ensure that the project design considers and coordinates with adjacent devices where practicable.

   For example, if an ITS system is proposed along a corridor, the vicinity may be the corridor and ¼ mile along each major road that crosses that corridor. Traffic conditions on these major roads may influence the operation of the ITS system on the corridor, and therefore affect the design of the ITS system. If ITS devices will be installed in a region, it is important to know what devices already exist within that region.

   In addition to knowing the location of communication networks and devices, it also is useful to have some information about the operation of the devices themselves to make sure the new

devices are compatible with the existing system. The key information is how each device communicates (in terms of the medium and protocol) with central and other field devices. If a fiber optic network exists within the vicinity, it is important to have details on the number of fibers and how many are currently available for use by new devices. Splicing details (the design of how existing devices are connected to each fiber in the network) are necessary if new devices will be using an existing fiber network. Information such as brand and age of each device may be necessary if the project proposes to replace system software or have new devices communicate directly with existing devices.

4. **Constructability and pre-design walkthrough.** In addition to inventorying the existing ITS elements, a walkthrough of the study area should be completed. The walkthrough would identify elements that would or could affect the design. These elements include communications within the vicinity, power availability, the actual location, surrounding technology, etc. The walkthrough should include an ITS coordinator, a Lansing representative, a representative from the TSC, and a representative from each of the Transportation Service Center areas of focus including: construction, utility, and traffic.

5. **Determine if the project is considered an "urban" or "rural" deployment.** An ITS design will likely be affected by the general location of the project. There are certain standard designs used if an area is in a rural setting or if it is in an urban setting.

   Device placement in rural settings tends to be less dense and provide snapshots of conditions or information at key decision points. These installations also use more wireless or dialup communication options since they are typically located farther from the central server. Alternative power sources or additional back-up may also be a consideration in more remote locations.

   Urban environments often depend upon a comprehensive data collection footprint with more frequent traveler information sources. The devices tend to use fiber for communications between the field devices and the central server. The data/information is often valuable to other urban agencies. There is also a higher level of compatibility required between new installations and existing system. The advantage to the more dense deployment can be measured by a greater benefit-to-cost ratio based on the higher traffic volumes experienced in the region.

   During the environmental analysis stage of the planning and design, there are several characteristics that should be evaluated to determine the most appropriate deployment density and technology for implementation. Standard guidelines associated with each of these characteristics do not currently exist, but these parameters can be evaluated to help in determining device type, density, and placement. The characteristics include:

   - Annual Average Daily Traffic (AADT)
   - Crash History
   - Cross-Section / Geometry
   - Interchange / Intersection Density

6. **Identify which ITS elements will be required to achieve high-level requirements.** Once high-level requirements are identified, the key ITS field elements can be identified. These elements may include:

- Communications system interconnecting all of these devices to the central server and each other
- Closed-Circuit Television (CCTV) cameras
- Dynamic Message Signs (DMS)
- Environmental Sensor Stations (ESS)
- Vehicle detectors
- Connection to other agencies
- Soil borings
- Power needs

Section 5 describes each of these components in more detail, which will assist the user in deciding which elements are required for each project. Other elements that may be associated with the ITS system, but which are not covered in this document, include:

- Traffic signals
- Back-of-queue flashers
- Traffic Management Center (TMC) / Traffic Operations Center (TOC) equipment, personnel, or operations

7. **Refine the Project Scope.** The final step is to refine a project scope that clearly defines the project including the location, vicinity, environmental conditions, existing technology to integrate and the proposed technology. This information will guide the detailed design of the proposed project and should be complete prior to progressing into the design.

5. ITS COMPONENTS

Before a detailed design of the ITS project is started, a planning-level layout of devices and a communications system should be completed. This plan should take into account environmental factors, existing ITS components, and project needs. The following components are covered in this section:

1. Special Provisions
2. A communications system interconnecting all of these devices to the central center and each other
3. Field devices
    a. Closed Circuit Television (CCTV) cameras
    b. Dynamic Message Signs (DMS)
    c. Environmental Sensor Stations (ESS)
    d. Vehicle detectors
4. Safety Systems
    a. Smart Work Zone
    b. Overheight Warning System
    c. Speed warning system
5. Management Center
6. Third Party
7. Operations
8. Consultant Services

The components of an intelligent transportation system work together to collect and send data to operators, assist operators in making decisions regarding traffic operations, and distribute information to drivers and the public.

The following is an example of information flowing through a standard ITS system:

1. Vehicle detectors in the pavement or adjacent to the roads count vehicles and calculate speeds
2. Data from these detectors is used to alert operators to abnormalities in traffic flow, which indicate a potential incident
3. After being alerted, operators can reposition CCTV cameras to view the potential incident location to confirm the incident
4. Once confirmed, operators can report the incident to emergency responders and communicate information about the incident to motorists via DMS, website or other traveler information technologies

The data from the field to motorists is conveyed through the communications network. This communications network may be a combination of hard-wire and wireless technologies. Devices are connected to each other and to the Transportation Management Center (TMC) or Traffic Operations Center (TOC) via this communications network.

Costs associated with certain subsystems and ITS deployments are shown **Table 3**. The table presents estimated costs and life expectancy for several common ITS subsystem deployments. The values are based on available national data and cost history from MDOT projects. This data also is used to support the Program Budget Forecaster Tool. Making this information available to a PM allows them to more

accurately estimate the overall costs of a deployment. Definitions for the column header are listed below:

- **Lifetime (years):** value that represents the estimated time in years before the subsystem would need replacement
- **Capital Cost ($K/Year) – Low / High:** estimated values from a national perspective to implement the subsystem
- **Adjusted From Date:** the base year from which the estimated Capital Cost was derived
- **Capital Cost ($K/Year) – Michigan:** estimated value derived for implementing the subsystem in Michigan. This value reflects costs and experience directly related to MDOT projects.
- **O&M Cost ($K/Year) – Low/High:** estimated values from a national perspective to operate and maintain the subsystem
- **Adjusted From Date:** the base year from which the estimated O&M Cost was derived
- **O&M Cost ($K/Year) – Michigan:** estimated value derived for operating and maintaining similar subsystems in Michigan. This value reflects costs and experience directly related to MDOT projects
- **Maintenance Cost ($K/Year):** an estimated value for the cost of providing preventative maintenance on the subsystem
- **Description:** a listing of the components and devices that make up the subsystem
- **Reference:** resources that were used in developing the costs and lifetime expectancy for the subsystem

Table 3. ITS Device Costs

Subsystem/Unit Cost Element	IDAS No.	Lifetime (years)	CAPITAL COST ($K)		ADJUSTED FROM DATE	CAPITAL COST ($K)	O&M COST ($K/year)		ADJUSTED FROM DATE	MAINT. COST ($K/Year)	DESCRIPTION	REFERENCE
			Low	High		MICHIGAN	LOW	HIGH		MICHIGAN		
DMS Large	RS015	20	65	90	2005	85	2.3	6	2005	8	LED, full matrix, walk-in DMS installed including Warranty	US-DOT ITS Cost Database and Vendor Update based on LED Signs
DMS Small F&I		20	25	50		75				5	LED, full matrix, Front or Rear Access DMS installed including Warranty.	Recent bids in Genesee County and in the Metro Region have been very high for DMS. Approximately $95-102k!
DMS Structure and Foundation		20	80	100		90				0.15	Annual cleaning of the walkways and touch up galvanizing.	
DMS Support Structure Remove		N/A				2.5-4.5				N/A	This work consists of removing a dynamic message sign (DMS) support structure and disposal, more expensive if complex structure or on bridge.	
Dynamic Message Sign Remove		N/A				4.5-8.5				N/A	This work consists of removing a dynamic message sign (DMS) and disposal	
Fiber Optic		20				25/K Ft					Fiber optic cable, installed within F & I HDPE/Conduit, including all spices, consumables and terminations of all the fibers. (Estimated per foot)	
ITS Cabinet with Options		20				16				0.25	Ground Mount base cabinet, with one Encoder, one Ethernet Switch, one Terminal Server, and foundation. (Pole mount deduct $4K.)	
ITS Comm. Equipment Install Only						1.5						
ITS Comm. Equipment Removal						0.625				N/A		
MVDS F&I		10	9	13	2005	7	0.1	0.58	2005	0.225	Includes installation, configuration and integration of device only (no pole). "Standard Definition" device for 200 feet of coverage	US-DOT ITS Cost Database
MVDS F&I (With Pole and Ethernet)						27.5				0.15	Includes installation, configuration and integration of device, with pole, small comm. cabinet, with Ethernet Switch, Comm. medium device and power source.	
Surveillance System Retrofit						12				0.25	The replacement of an existing CCTV, includes removal of existing CCTV, disposal of existing CCTV, required retrofit mounting plates, sealing of existing pole mount, and CLD.	
Surveillance System Tower Mount						12				0.25	Single CCTV (70-foot minimum mount height) with camera lowering device (CLD) required mounted conduit and support structure for surface mounted CLD. Does not include tower	
Surveillance System Remote						48				0.25	Single CCTV with camera lowering device, 90 foot above grade mounting CCTV capable pole, pole foundation as required. (Multi CCTV add $10K per added CCTV.)	

Table 3. ITS Device Costs

Subsystem/Unit Cost Element	IDAS No.	Lifetime (years)	CAPITAL COST ($K)		ADJUSTED FROM DATE	CAPITAL COST ($K)	O&M COST ($K/year)		ADJUSTED FROM DATE	MAINT. COST ($K/Year)	DESCRIPTION	REFERENCE
			Low	High		MICHIGAN	LOW	HIGH		MICHIGAN		
Wireless Link Backhaul						125				2.5	A complete 150 Mbps link is called out as "Wireless Link, Backhaul" and is comprised of all cabling, radios, antennas and system appurtenances required to complete a functional full-duplex link	
Environmental Sensor Station (RWIS)		25	30-45		1998	38	0.2648	1.65497	2001	1.5	CPU replaced every 5 years at a cost of $4K.O&M cost range include optional weather	US-DOT ITS Cost Database
Dynamic Message Sign - Portable		14	22.0	26	2005	24	0.6	1.8	2005	3.5	includes trailer, solar or diesel powered	US-DOT ITS Cost Database
900 MHz Spread Spectrum Radio Link		10	8.2		1999	7	0.09923	0.3969	2004	0.25	Cost per link (pair)	US-DOT ITS Cost Database
Highway Advisory Radio	RS017	20	22	35	2005	27.5	0.6	1	2005	1	10 Watt HAR. Includes processor, antenna, transmitters, battery back-up, cabinet, rack mounting, lighting, mounts, connectors, cable and license fee	US-DOT ITS Cost Database
5.X GHz Radio Link						8					Cost per link (pair). Typically these are configured in a PTMP system, so unit cost for a link includes the subscriber unit and pro-rated cost of base station unit	

5.1 Special Provisions

When choosing the ITS elements to include in a new project, the *Michigan Road Design Manual* should be consulted (*http://mdotwas1.mdot.state.mi.us/public/design/englishroadmanual/*). Chapter 11 includes guidance for developing and submitting Special Provisions for any MDOT project. In addition to the general guidance, the internal ProjectWise folder (*pwname:\\MDOTProjectWise\Documents\System Operations and Management\Intelligent Transportation Systems\ITS Special Provisions\Most Recent Versions*) provides all of the approved ITS specific special provisions (SP). These approved SPs have been through a standard approval process that is shown in **Figure 14**. The existing SPs should be used when designing components of an ITS project to ensure interoperability and integration with existing systems. They should be requested early in the design phase, prior to the plan review meeting, from the MDOT ITS IPO Coordinating Engineer.

Figure 14. Approval process for Special Provisions

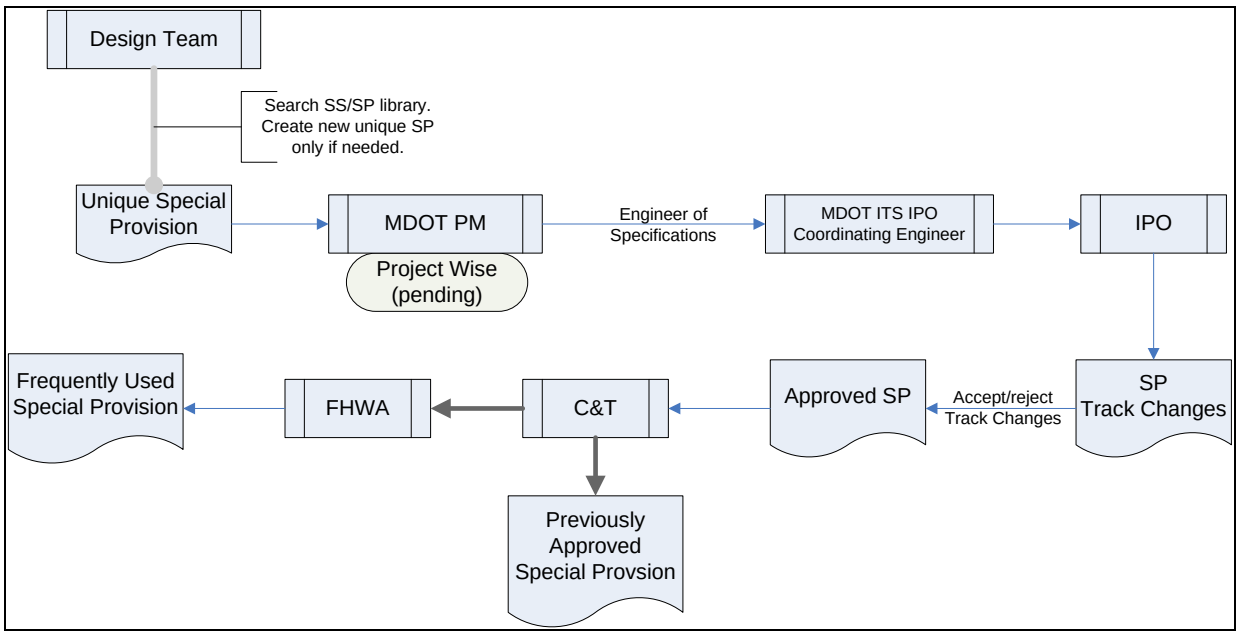

Another approval component includes shop drawings. Shop drawings are provided from the vendor to MDOT and include the explanation of how the vendor will meet MDOT standards for an ITS design. MDOT will review to ensure the vendor is complying with their standards. It should include all costs for programming. MDOT will return one of four evaluations:

- No exceptions taken – the shop drawing has been approved
- Make corrections noted – the corrections need to be made, but no re-submittal is required
- Amend and resubmit – once the corrections have been made, then resubmit for approval
- Rejected – does not comply with MDOT standards

Table 4 presents a quick reference for the role of the IPO and Regional Staff as related to Special Provisions (SP) review and approval. It also is important to note that the IPO is not responsible

for reviewing SPs related to non-ITS components of a project. For example, the structure supporting a DMS would not be reviewed by the IPO.

Table 4. Responsibilities Matrix SP Review and Approval

Task	*Responsibility Matrix*	
	IPO	*Region Design Staff*
Review Standard ITS Specs submitted by designer for compliance	X	
Review Standard ITS Drawing for compliance	X	
Review Non-Standard ITS Specs	X	
Review Non-Standard ITS Details	X	
Review Project Systems Engineering/Concept of Operations Reports for Regional Architecture and 23 CFR 940 Compliance	X	
Review for Constructability		X
Review Standard Non-ITS Specs		X
Review Standard Non-ITS Drawings		X
Review Non-Standard Non-ITS Specs		X
Review Non-Standard Non-ITS Details		X
Review ITS Structural Design (Towers, DMS Mounts, etc.)	X	
Review Shop Drawings		X

Note: IPO reviews Preliminary, Draft Final, and OEC Submittals

5.1.1 IPO Process for Reviewing Special Provisions

If a nonexistent SP for ITS components is required, the designer should follow Chapter 11 of *Michigan Road Design Manual* (*http://mdotwas1.mdot.state.mi.us/public/design/files/englishroadmanual/erdm11.pdf*). Prior to creating a unique, job-specific special provision, the designer should search MDOT's Supplemental Specifications SS/SP website (*http://mdotwas1.mdot.state.mi.us/public/dessssp/spss*). The currently approved SPs (as of the date of this report) are included in the MDOT internal ProjectWise folder (*pwname:\\MDOTProjectWise\Documents\System Operations and Management\Intelligent Transportation Systems\ITS Special Provisions\Most Recent Versions*).

When it is decided that a unique SP is needed, the designer must submit the MS Word document to the MDOT project manager, who will import the document into the document management system ProjectWise. When a new SP appears, Construction and Technology (C&T) staff will alert the MDOT ITS reviewer (ITS IPO Coordinating Engineer). The MDOT reviewer will then export the document and lock it for review by the IPO. All edits will appear as track changes, a MS Word editing feature. The MDOT ITS reviewer then will have the option to either accept or reject the edits. C&T will finalize the document and either send it on to FHWA for approval and use as a Frequently Used Special Provision, or release it to the library of Previously Approved Special Provisions. Please note that SPs are not approved solely by the IPO. The IPO functions as the primary technical reviewer, but approval from the MDOT ITS reviewer and C&T also are required.

5.1.1 IPO role with non-approved Special Provisions

Non-approved SPs can exist in several states and the IPO has implemented some configuration management procedures to track them. The MDOT SS/SP library website

(http://mdotwas1.mdot.state.mi.us/public/dessssp/) contains the most current approved SPs while the ITS IPO Coordinating Engineer retains a list of approved SPs as well as a list of those currently under industry review. Industry reviewers submit responses to the IPO in a review matrix that also is available on the website. Once the submitted comments have been discussed between the IPO and MDOT ITS staff, the MDOT ITS SP reviewer (ITS IPO Coordinating Engineer or ITS Program Manager) can approve the SP. The approved changes then will be posted in the next revision of the SP.

After an SP undergoes industry review, it can be submitted to MDOT through ProjectWise and sent through the formal SP review process. These SPs are added to the Frequently Used Special Provisions or Previously Approved in the MDOT SS/SP library.

5.1.2 How to choose the correct options in a Special Provision

Even though the ITS Program Office and MDOT provide approved SPs for ITS components, it is important for the project manager and the consultant to know they must customize the SP once they have selected one for each ITS component of the design. This section will present and how to select the correct portions from the currently approved SPs to include in the design.

MDOT Special Provision for ITS Cabinet

The ITS Cabinet Special Provision (SP) provides the governing specifications for the furnishing, installation, and integration of an aluminum traffic cabinet designed to house electronics related to the ITS devices and subsystems deployed at a remote site. Also included within the SP are several options for equipment to be included within the cabinet, depending upon the specific site configuration and type of equipment present.

The SP gives the material and construction specifications for the baseline cabinet and each optional piece of equipment. The Measurement and Payment section of the SP then lists each possible configuration as a pay item (contract item). After the particular configurations for a job are determined, all other pay items for configurations should be “struck out” from the document, but not removed completely.

The baseline cabinet includes:

- Aluminum equipment cabinet in a pole- or pad-mount style
- Air intake and ventilation equipment (fans and thermostat)
- 4-post 19” EIA equipment rack
- Document drawer and work surface
- Internal LED cabinet lighting
- Cabinet monitoring system
- 30A main breaker and internal power distribution including 2 duplex outlets
- 1500 VA Uninterruptible Power Supply
- Generator connection panel

- Surge protection
- Common Grounding System
- Cable Management System

Optional items, described in more detail below, include:

- Managed Field Ethernet Switch (MFES)
- Digital Video Encoder (DVE)
- Terminal Device Server (TDS)

Managed Field Ethernet Switch (MFES)

A MFES is required to be in the ITS cabinet at any remote site with more than one Ethernet device (see also the discussion on TDS below). A MFES is commonly included in all ITS cabinets in a project to aid the future expandability of ITS sites and equipment in the field without needing to upgrade or change the connectivity of the site to the ITS network. A MFES also adds an additional level of network management, which can help with remote diagnostics and maintenance/service at the site. In certain select cases, a MFES may not be included in a cabinet, such as a single detector station with no plans for future expansion at the site.

Digital Video Encoder (DVE)

A DVE, in the context of this SP, compresses the "raw" National Television System Committee (NTSC) video feed from a CCTV camera to an MPEG-4 stream. It also encapsulates the Pan-Tilt-Zoom control data to and from the camera into the stream. The DVE specified in this SP takes a coaxial video input and serial data input and converts to an Ethernet output. These devices are used to compress the video to save on the amount of bandwidth needed to transfer the live image(s) over the ITS network. A DVE is needed for each CCTV camera at a site, hence the pay items with "Dual DVE" for sites with two cameras.

Terminal Device Server (TDS)

A TDS translates serial (RS-232/422/485) communications data into an Ethernet communications data. Therefore, a TDS is used anywhere that either Legacy or new equipment at a site does not natively support Ethernet. An example of this is a Canoga series traffic data collection card, which outputs serial data. The serial data line is connected to a TDS and then the Ethernet output can be connected to the MFES or whatever means of remote Ethernet communication are provided to the site. A TDS is needed for each site with a serial device.

5.2 Communications

Communications are essential to the functioning of an ITS project. Without reliable, robust communications, center-to-center and field-to-center information - such as video, voice, and data does not flow. Depending on the medium chosen, cost of communications can be 10% to 50% of a project's overall cost. ITS equipment may communicate with a TOC in a variety of ways to overcome a number of obstacles.

This communication network may be a combination of wireless (licensed microwave, or unlicensed microwave), agency-owned hard-wire (typically fiber optic for new installation), or purchased communications services (plain old telephone service [POTS] line, cellular, broadband, etc). Communications are a likely part of every ITS project, even if the project is an interim project and the network does not create a complete pathway for communications of devices. Communications projects may also be designed to replace existing communications solutions that no longer meet a desired level of service.

5.2.1 Topology

In most deployments in the state of Michigan, the predominant communications media are microwave (combinations of licensed microwave backhaul and unlicensed last mile links), fiber optic cable, and purchased services including leased POTS lines and T-1 lines. **Figure 15** shows typical field device to central network topologies. MDOT maintains specifications for fiber optic cable ("Special Provision for Fiber Optic Specifications") and licensed microwave backhaul ("Special Provision for Wireless Link, Backhaul"). In addition, specifications for the active components of the communications network including the field Ethernet switch, and the terminal servers are contained in "Specification for ITS Communications Electronics" (Ethernet switch, field manager, and terminal device server). Following is an extended discussion of communications media.

Figure 15. Network Topologies

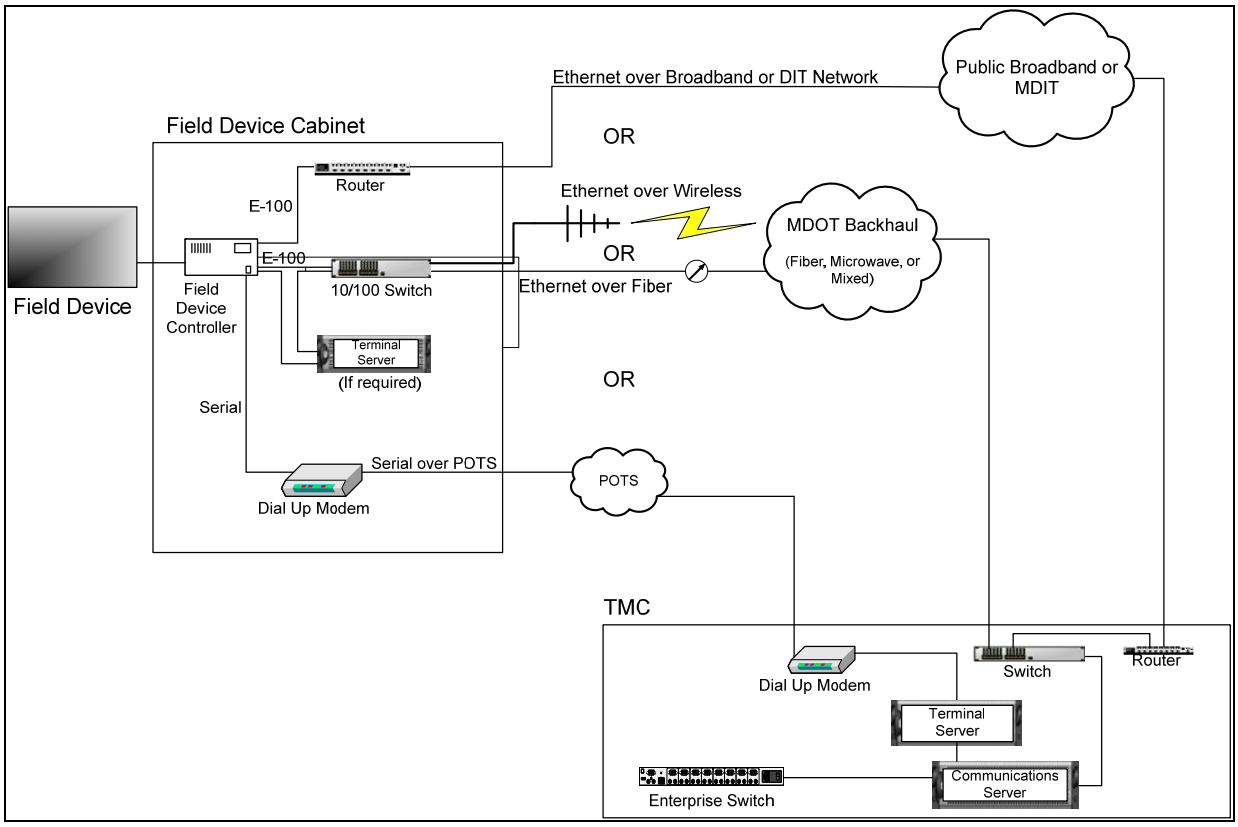

5.2.2 Type

Fiber Optic Cables are a reliable, high-speed technology. Fiber optics may be installed aerially along poles or underground in conduit. Optical fiber transmits data between field devices or between field devices and a central facility. Depending on the power of the equipment used, the amount of information (also known as bandwidth) that can be passed over optical fiber is virtually unlimited. Because optical fiber transmits light and not electricity, it resists distortions from electromagnetic interference, is not interrupted by environmental conditions like lightning and offers a high degree of network security as it is not easy to tap into a communications circuit of fiber optic cable.

Fiber cables come in various sizes, with anywhere from two to 288 fibers per cable. Common cable sizes include 12, 24, 36, 48, 96, and 144. There are three major factors for determining the number of fibers on a given section of cable: (1) the number and architecture of devices to service in the proposed design, (2) the number of center-to-center communication paths that need to be served, and (3) possible future use of the cable.

Radio Communications use antennas and radio transceivers to connect devices to a central location or to one another. Typically, wireless communication devices used for ITS projects and other things require a line of sight. Depending on the types of equipment used, their frequencies and operating characteristics, the amount of data and the distance that data can be transmitted varies greatly. For low bandwidth applications (for example purposes, assume lower than 38.4 kilobits per second), data may be transmitted over relatively long distances (up to 10 miles) with limited line of sight. For higher bandwidth applications like video, typically the transmission distances are shorter and the line-of-sight constraints are greater. Wireless communications are more susceptible to environmental conditions than hard-wire communications, and may have lower reliability. In addition, some radio bandwidths may require licensing from the Federal Communications Commission (FCC) before installation. Radio communications may be used as an interim communications method until the full ITS network is deployed and devices can be connected with a hard-wired technology.

Purchased services may be acquired from a commercial telecommunications provider like the telephone company or cable television provider. A user typically pays a monthly fee for service as well as a start-up installation charge. Bandwidth may vary from as low as 1,200 baud to 56K (the bandwidth of a standard telephone line capable of transmitting low volumes of data, still data images, and low resolution and/or slow frame rate moving video) to 1.5MB (a T-1 circuit, capable of supporting Ethernet network connections and two to four streams of moderate to good quality compressed full motion video and beyond).

Dial-up/Cellular uses existing telephone or cellular networks. This technology is appropriate for connecting to devices that have low bandwidth needs and do not need continuous communication. For example, dial-up and cellular work better for DMS than for CCTV cameras, since DMS only need occasional contact and CCTV cameras typically need continuous communication for viewing streaming video. This technology also may be used as an interim communications method until the full ITS communications network is complete, and devices can be connected with a hard-wired technology. There is usually a monthly cost associated with using dial-up or cellular networks. In addition, a state cellular contract form is required for each device requiring a connection. **Appendix F** includes a copy of the required form.

5.2.3 Maintenance

Appendix G includes a formatted checklist for preventative maintenance of communication infrastructure.

The current SPs for towers is being revised and enhanced based on recent projects.

5.2.4 Placement

Fiber optic cables are placed either above ground or below ground, typically depending on the availability of space on utility poles along the route. Aerial installation on existing utility poles is less expensive and less disruptive than underground installation. In some cases, a particular route may be chosen because of the availability of utility poles.

Underground installation includes trench, directional drill and bore and jack. These methods are used when aerial installation is unavailable. Of these three, trenching is the least expensive, but is disruptive to vegetation and driveways. Therefore, directional drilling is typically used under asphalt or concrete driveways and streets. Bore and jack is used when the cable must be installed at a greater than usual depth, such as under railroads or streams.

Multiple methods may be alternated along the cable route. However, there is an additional cost when switching methods, especially between aerial and any of the underground installations. This cost is from the additional labor and materials required at a switch point, including coiling cable in a junction box and installing the cable vertically along the utility pole.

For wireless communications, it is important that a line of sight evaluation be performed during the design phase. The details of the pre-delivery evaluation should be included in the wireless communication SP. Some general notes are listed below, but these are not all inclusive of the requirements that should be listed in the SP.

- A site evaluation shall be completed and include all aspects of the evaluation.
- Meeting will be established by the PM within 30 days of Notice to Proceed (NTP).
- Each node should be evaluated.

5.3 Field Devices

Field devices included in an ITS project can involve a multitude of technologies. The technologies will be chosen in order to meet the project's goals, as outlined in the concept of operations and high-level requirements.

Once the types of ITS equipment have been chosen, the next step is to determine the best placement for each device. Although each situation is unique and requires some engineering judgment, these guidelines are intended to help in selecting optimal placement. Some considerations taken when placing devices include traffic volume, crash history, cross-section/geometry, and interchange/intersection density.

The following sections will describe six of the most common types of ITS equipment, including some high-level guidelines for placing field devices and selecting appropriate communication alternatives for the project.

5.3.1 Closed Circuit Television (CCTV) Cameras

CCTV cameras are used by transportation agencies to monitor traffic and confirm incidents. They are typically installed along congested highways, city arterials or at specific intersections. The camera video is transmitted to a central location, where operators view the images for indications of problems on the roadways and verification of incidents. Operators can use that information to dispatch freeway courtesy patrol (FCP) and emergency responders as necessary. They also use that information to post messages on DMS units, websites, and other traveler information sources. Images from the CCTV cameras also may be used by local television stations to provide viewers with information prior to travelling.

CCTV cameras decrease the incident identification and response time to accidents, stalled vehicles and spills on the roadway. This has a number of results. Emergency vehicles are able to arrive at the scene more quickly. Patrol vehicles or tow-trucks can clear the incident in a shorter time, reducing the likelihood of a secondary accident. Since an accident causes congestion, whether the vehicle remains in the travel lane or is moved to the shoulder, a decreased response time reduces congestion along the corridor.

MDOT maintains specifications for CCTV cameras and their constitute components. These key components include a video encoder and a CCTV assembly. The approved SP for these components include:

- Surveillance System, Retrofit (for reuse locations)
- Surveillance System, Tower Mount (for new locations at high elevations)
- Surveillance System, Remote Site
- ITS Communications Electronics (including Ethernet switch, field manager, video encoder, digital and video decoder)

Figure 16 shows a typical, simplified block diagram for a variety of configurations for CCTV camera deployments.

Figure 16. CCTV Topology Alternatives

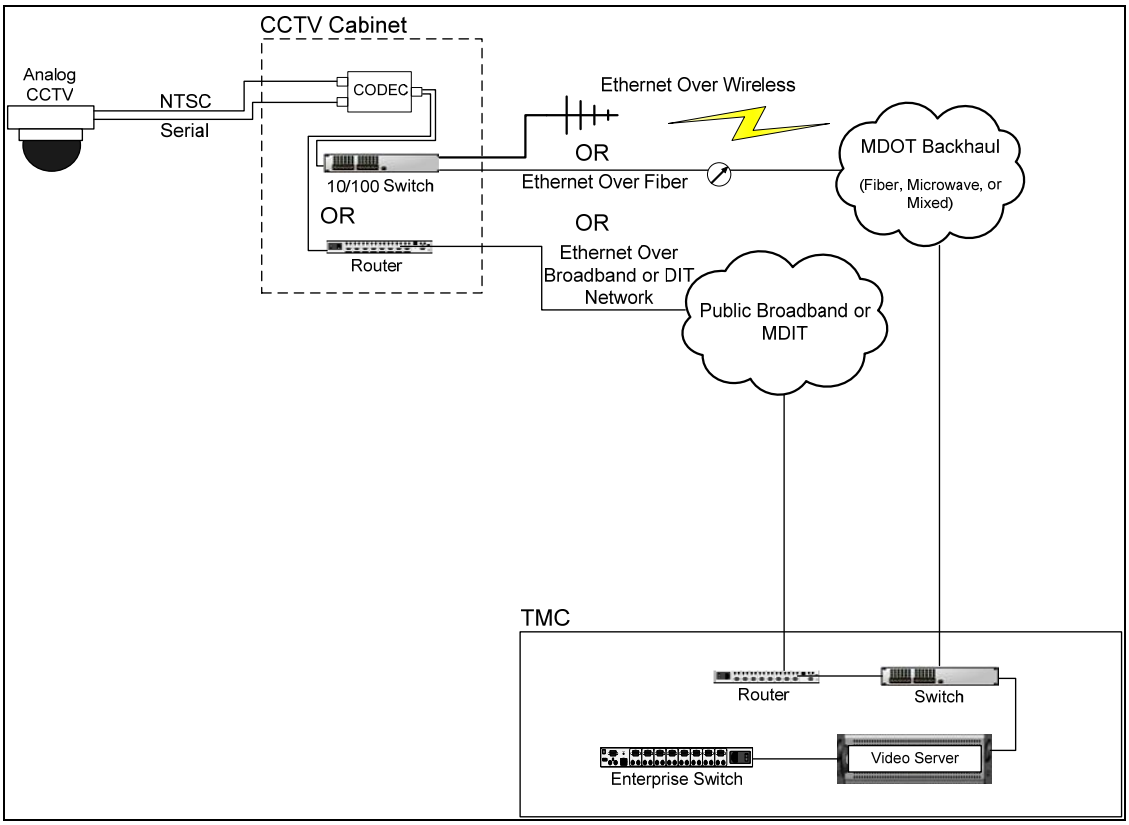

5.3.1.1 *Type*

Cameras are either fixed or pan-tilt-zoom (PTZ). This classification determines the functionality and hardware for the camera. A fixed camera is focused on one area and cannot be adjusted remotely. Fixed cameras can show a good level of detail for several hundred feet, depending on the mounting location and camera quality. A PTZ camera allows an operator to readjust the view of the camera. PTZ cameras generally provide you with a good level of detail up to 1.5 miles on level terrain. Four fixed cameras or one PTZ is sufficient to view one intersection and both arrangements cost about the same.

A dome camera housing can be added to either a fixed or PTZ camera. This dome can be pressurized and temperature-controlled, and protects the camera from precipitation, corrosion, and extreme temperatures.

5.3.1.2 *Maintenance*

Preventative maintenance should be performed on a three-month and six-month recurring schedule. The three-month maintenance is done on the camera and at MDOT ITS Center (MITSC). The six-month maintenance includes work at the camera, at MITSC, and at all hub and relay sites. Maintenance checklists are included in **Appendix H**.

CCTV cameras can be maintained using two general methods. The first is the more common method of maintaining cameras on a CCTV pole using a bucket truck. This method requires bucket trucks at least as high as the CCTV installation (typically 30-40 feet). The second uses a lowering device to lower the camera assembly to the ground for maintenance. This method is more costly but is effective when CCTV cameras are installed at higher elevations (40-60 feet) for better visibility or bucket trucks are not available for maintenance.

5.3.1.3 *Placement*

Cameras are typically installed at key locations where there is a potential of congestion related problems because of disruptive incidents, recurring high traffic volumes, or special events. CCTV cameras within a municipality are typically installed at intersections or along major arterials. CCTV cameras along a freeway may be located at interchanges or at the crests of vertical or horizontal curves. Multiple cameras may be necessary at an intersection or interchange for full coverage. They also may be positioned to view adjacent DMS units, so that messages posted by operators can be verified. It is not unusual to have 100 percent coverage of primary roads, although it is not necessary in most places.

A bucket truck survey is typically conducted at each proposed CCTV camera site to determine the location with the greatest view shed (cone of vision). Issues considered during the site location process include visibility, quality of coverage along the mainline, power sources, possible obstruction from surrounding trees or buildings, access to the site for construction as well as maintenance, ease of pole installation, and ease of maintenance. The camera placement and height should consider the height of the maintaining agency's available bucket trucks, and should be placed so that maintenance vehicles do not need to close a lane to access the camera.

5.3.2 Dynamic Message Signs (DMS)

DMS are primarily used to manage the response to incidents. They may be installed on interstates, adjacent corridors or on key roads within a municipality. Their primary purpose on freeways is to alert vehicles of congestion or an incident on the upcoming segment of roadway. It may give general alerts, such as "congestion ahead," or specific details as to the location of the accident or predicted travel time to a particular destination. DMS units on adjacent corridors alert the motorist to adverse conditions on the adjacent facility and/or the freeways, as well as indicating the extent and location of congestion or incidents on the interstate. When operators are alerted to a problem (either by police, a caller from the roadway or from CCTV images), they display the necessary message on the appropriate DMS units.

By alerting drivers to upcoming problems, vehicles have time to divert their intended route or adjust their position in the roadway to best avoid the incident. They are more alert, and will be able to react to congestion or problems more quickly. Additional accidents often happen soon after an initial accident because drivers don't expect an obstruction in their travel lane, and may be driving too quickly or too close together to react safely.

DMS also serve the purpose of informing the traveling public of upcoming problems and expected travel times so that they may mentally prepare – often, drivers are less impatient (and thus less likely to react in anger due to congestion) if they can anticipate how long the delay will be, or how far the congestion spreads. Also, perhaps most importantly, DMS lead to informed drivers, who may choose to use alternate travel paths during heavy congestion, thereby reducing the volume on the freeway, the likelihood of additional accidents, and the average travel time for the system as a whole.

While DMS on freeways inform drivers of congestion so that they may choose to use alternate routes, DMS located on these alternate corridors help the drivers find the best path to avoid the point of congestion and return to the freeway. The placement of the DMSs is decided based on the predetermined alternate route corridors, and the TMC operators will display messages guiding drivers according to the specific problem.

MDOT has developed specifications for large DMS units suitable for freeway installation, small DMS units suitable for lower speed facilities and portable DMS units (in draft form). The approved Special Provisions for these components include:

- Dynamic Message Sign, Large
- Dynamic Message Sign, Small; Dynamic Message Sign, Small, Foundation and Structure
- Dynamic Message Sign, Large, Support Structure; Dynamic Message Sign, Large, Foundation
- Dynamic Message Sign, Support Structure, Remove
- Dynamic Message Sign, Remove
- Portable Changeable Message Sign System, Furnish and Operate (draft)

DMS units typically require communications components identified in the "Special Provisions for ITS Communications Electronics" (Ethernet switch, field manager, and terminal device server).

Figure 17 shows a simplified block diagram layout for a field to central architecture for a typical DMS arrangement.

Figure 17. DMS Topology Alternatives

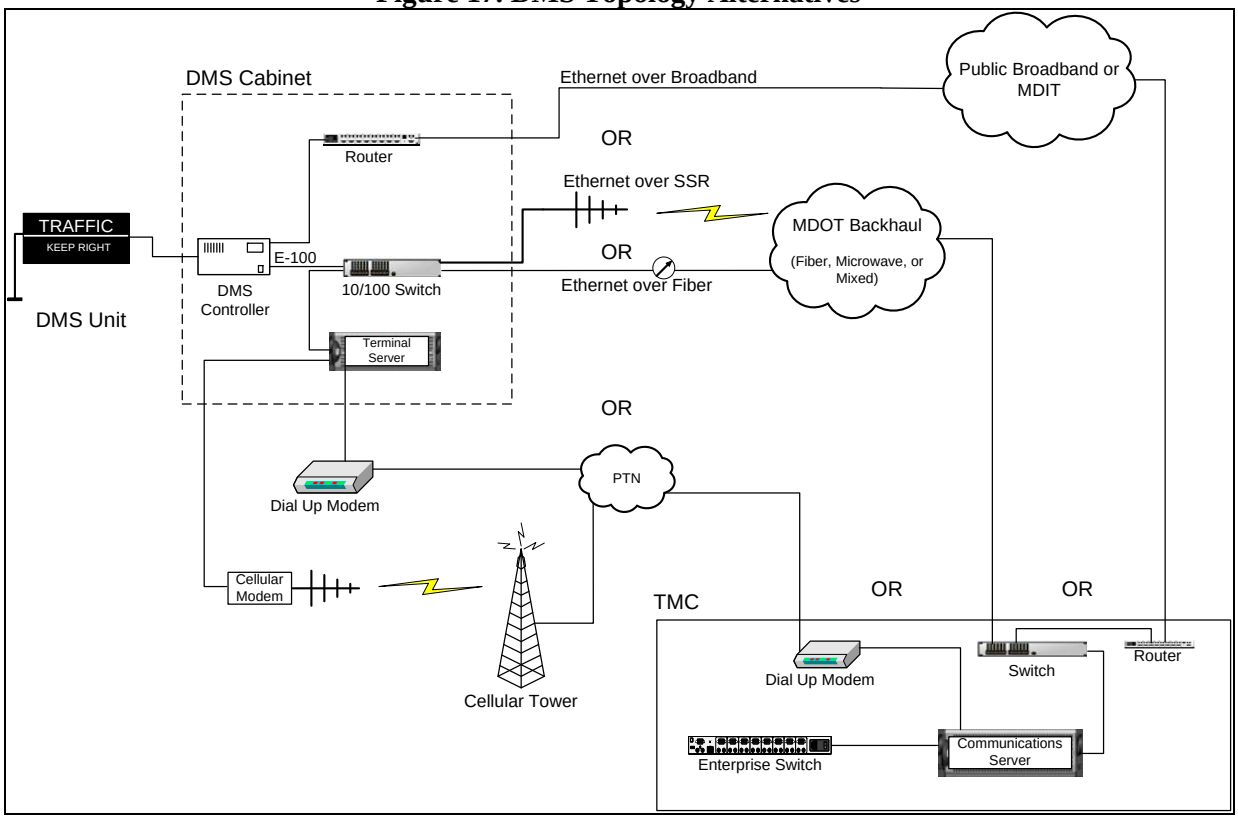

5.3.2.1 *Type*

There are several options to be considered when choosing DMS technology. They include:

- Type of structure – overhead, or pole-mounted
- Type of matrix – character, line, or full

DMS units may be overhead or pole-mounted. Overhead structures have two foundations and span across either one or both directions of traffic, depending on the size and type of median. Pole-mounted signs are located next to the travel lane in the shoulder. A DMS weighing less than 500 pounds may be mounted on a standard signal mast arm, which minimizes the cost of the sign and structure. The benefit of a pole-mounted sign located on the shoulder is easier installation and maintenance that does not require traffic control. These also are less expensive than an overhead structure.

DMS can use one of three typical types of matrix displays: character, line, or full. However, MDOT uses the full matrix DMS as a standard. In a character matrix, each letter of the text message is displayed within its own space. In a line matrix, there is a separation between each line of text, but not between characters in each line. In a full matrix, a message can be shown at any size and location within the display space, and there is no separation between characters or lines. The full

matrix provides the greatest flexibility in messages, but requires more complex hardware and software than character or line matrices. Full matrix DMS are the standard for use on MDOT routes. A Full Matrix DMS costs are moderately higher than a character or line matrix DMS.

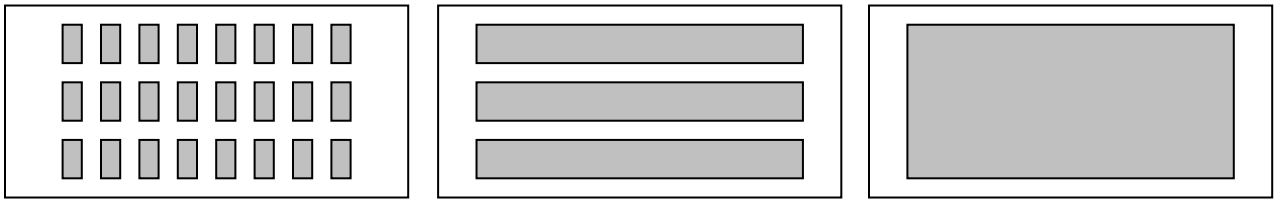

Character Matrix | Line Matrix | Full Matrix (MDOT standard)

New DMS typically use LED (light emitting diode) technology. Visibility is good for LED signs under most lighting conditions, and LED signs require less maintenance than other technologies.

5.3.2.2 *Maintenance*

DMS signs typically require preventative maintenance on a three-month, six-month and one-year recurring schedule. The three-month maintenance is done at the DMS, and includes physical and operational tests. The six-month maintenance is to replace filters in the DMS. The annual maintenance includes physical tests at the DMS. Maintenance checklists developed by MDOT are included in the **Appendix I**. Even though the MDOT standard is currently for a "Full Matrix" display, the Department currently operates some signs using flip disk technology. Flip disk technology uses a board comprised of several small black and yellow disks that when closed show only black and when open display a bright yellow. The patterns of the disks on the face of the sign are used to display messaged to the public. This is an older technology used in message signs and some are still in operation in Michigan. **Appendix J** contains a maintenance checklist for this type of sign. While certain guidelines exist for the preventative maintenance of DMS, it is important to reference the manufacture's guidelines for their recommended maintenance on specific signs.

5.3.2.3 *Placement*

DMS are used to provide incident and detour information to drivers. Therefore, they are typically located in advance of major interchanges where diversion may need to take place, and at intermediate points between these major interchanges. For example, a typical location for a DMS along a highway is prior to the interchange for a bypass route. If an incident occurs on either the bypass or the business route, traffic operators can use the DMS to alert drivers so they can choose the alternate course and avoid the incident location. DMS for incident management are often placed in advance of locations with a historically high crash rate.

In an urban environment, they may be placed on the outskirts of a municipality along major roads so that drivers entering the town or city are provided with this information early enough to change their route. If an incident occurs along one of these major roads or downtown, traffic operators can use the DMS to warn drivers, who can then choose alternate routes throughout the city to avoid the incident on their way to their destination.

DMS also may be used to provide travel time information to drivers. These DMS are most likely to be placed along freeways or major arterials, especially along commuter routes. These are most useful when located prior to interchanges so drivers can use the information to decide if they would rather stay on the freeway or take an alternate route to their destination. Travel time DMS are most efficient when used regularly during peak hours, and when they consistently provide information about the same roadway segments so drivers have a basis of comparison from one day to the next.

Pole-mounted signs should be placed in locations that are readily accessible so crews can easily and safely perform regular maintenance. The agency may wish to consider public input on the design and location of DMS, particularly in areas where aesthetics are of greater concern.

5.3.3 Environmental Sensor Stations (ESS)

Road Weather Information Systems (RWIS) include a combination of multiple Environmental Sensor Stations (ESS) that monitor and transmit atmospheric and road surface conditions based on current weather conditions. ESS are installed at key locations based on the need to collect temperature, wind speed, precipitation type and rate, and other specific environmental conditions that can impact transportation. The locations and types of sensors is specific to the stakeholders' data needs. The FHWA's current siting guidelines for ESS is located at the following website http://www.itsdocs.fhwa.dot.gov/JPODOCS/REPTS_TE/14447.htm. **Table 5** presents an overview of the types of sensors available. Please refer to the Special Provision for Environmental Sensor Station for data concerning ESS installations. The maintenance for the ESS is provided in **Appendix K**. It also is important to note that currently MDOT has made the decision for all ESS data to be privately hosted by a vendor. Maintenance for ESS may be handled by MDOT forces or through maintenance contract, but no data will be home run to a MDOT facility. It will be provided through a log-in accessible web site by the vendor. **Figure 18** provides the communications topology for ESS.

Table 5. Types of Sensor Available

Data Collected		***Sensor Station***
Basic	Precipitation (Type, Intensity)	Rain Gauge, Optical Present Weather Detector
	Atmospheric Temperature (Air)	Thermometer
	Pavement Temperature	Pavement Sensor
	Wind Speed	Anemometer and Wind Vane or Aerovane (combination of the two)
Enhanced	Visibility	Visibility Sensor
	Water Vapor (Humidity)	Hygrometer
	Snow Depth	Snow Depth Sensor
	Flooding/Water Level	Float Gauge; Conductance Sensor
	CCTV Images	CCTV camera

Figure 18. ESS Topology

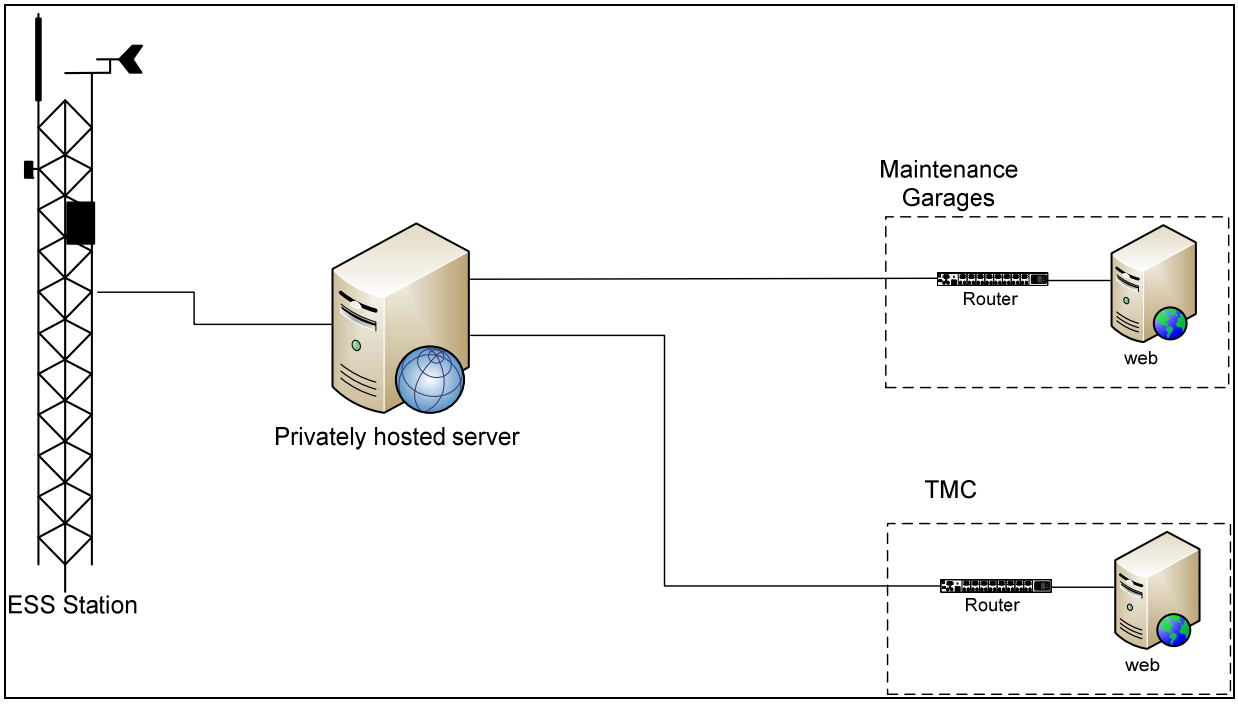

5.3.4 Vehicle Detectors

Detection systems include a network of vehicle detectors installed in the roadway that calculate traffic characteristics such as volume, speed, and occupancy. By detecting anomalies in traffic flow (such as an unexpected reduction in speed or flow, or an inefficient use of signal time allocation), the systems provide input to traffic operators who use the information to identify and address incidents.

Detection may be used for traffic monitoring, for other ITS components (such as back-of-queue flashers), as part of a traffic responsive or adaptive signal programs and as a part of an advanced traveler information system. Detectors may be used on freeway or arterial segments, and are generally installed along primary travel corridors.

Detectors come in a variety of technologies. Regardless of the technology, the most useful information is garnered when each lane is detected individually. Detector technologies include inductive loops, microwave or RADAR, laser and video. Data from the detector are transmitted back to the TMC via a dedicated, leased or public communications system. Detectors (or detector pairs) are typically placed every one- mile for urban areas and every 2 to 3 miles for rural areas and/or at key locations for collections of data for the traffic monitoring and traveler information.

MDOT has adopted sidefire RADAR as its detection standard. This unit is described in the specification titled “Special Provision for Microwave Vehicle Detection System.” Additional components required for this system are contained in the “Special Provisions for ITS Communication Electronics” (field Ethernet switch, manager). **Figure 19** shows a simplified detection block diagram. Following is an extended discussion of alternate detection types.

Figure 19. Detection Topology Alternatives

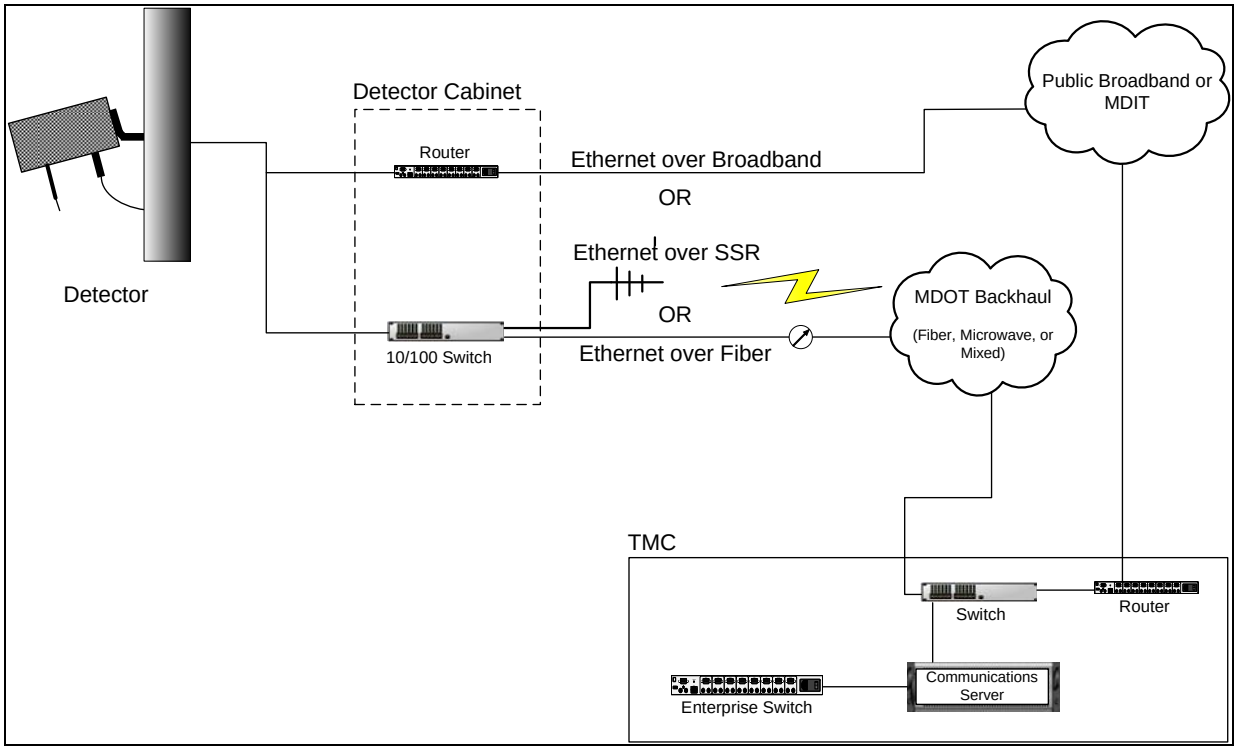

5.3.4.1 *Type*

The two main types of vehicle detectors are intrusive and non-intrusive. Intrusive detectors are installed directly in the roadway pavement and include inductive loops or microloop probes. Non-intrusive detectors are installed off the roadway and include ultrasonic, acoustic, infrared, microwave, radar, and video image detectors. MDOT typically uses Microwave or RADAR for non-intrusive detection.

In-Pavement Loops, including inductive loops and microloop probes, are the most common detector technology. In-pavement loops are installed directly in the roadway surface along the freeway or at intersections, and are used in pairs to calculate volume, occupancy and speed. The process of installing and maintaining in-pavement loops is expensive and require traffic control measures. The reliability of the detectors can be affected by pavement resurfacing and utility work and are not practical in bad or old pavement. The pavement conditions should be evaluated before installing. However, this is a proven technology that is widely used. It is the most effective method of identifying vehicles when the detectors are operating correctly.

Ultrasonic Detectors recognize vehicles by emitting a pulse of sound energy at the roadway and measuring the time for the signal to return to the sensor. If this time is less than normal, a vehicle presence is detected. Ultrasonic sensors are able to measure vehicle presence and occupancy. They work best when directed at a perpendicular angle. Thus, ultrasonic sensors are mounted either overhead pointing downward or on the side of the road at vehicle heights.

Ultrasonic sensors have experienced problems with over-counting stopped vehicles during field tests. It is also possible to miss a vehicle entirely due to the pulse nature of the sensors. The sensor sends a pulse to the roadway, but must wait for the reflected signal before sending a second signal. If the sensor is located at a large distance from the roadway, it is possible for vehicles at high speeds to pass through the detection area between pulses. Similarly, two vehicles with a small headway gap may be counted as a single vehicle due to pulse timings.

Acoustic Detectors note changes in sound energy of vehicles passing along the roadway. These detectors are able to measure vehicle presence and speed from the sounds emitting from inside a vehicle and the interaction between the vehicle's tires and the roadway. This is accomplished by pointing an array of microphones at the roadway from an overhead or side mounting. Some models can also capable of collecting data on occupancy.

Acoustic sensors have had marginal field test results on both freeways and intersections. The detectors experience instances of both over-counting and under-counting vehicles. Acoustic detection has problems detecting slow moving or stopped vehicles. Field tests have also revealed that acoustic sensors are sensitive to snow and cold temperatures.

Infrared Detectors can either be passive or active. Passive infrared sensors measure the infrared energy emitted by vehicles in the detection zone. They can measure vehicle presence, occupancy and volume. Active infrared sensors transmit energy to the detection zone and measure the reflection off a vehicle. The sensors typically use either a laser or LED as the signal source to measure vehicle presence, volume, speed (using multiple sensors), vehicle length, queue length and classification. All infrared sensors can be mounted overhead or on the side of the road for multiple lane detection.

During field tests, passive infrared sensors performed satisfactorily on freeway and intersection locations. Weather factors were also found to have no significant effect on performance. On the other hand, active infrared sensors were found to over-count during periods of heavy snowfall, and under-count during wet pavement conditions. It should also be noted that active infrared sensors have a relatively small detection zone on the roadway, usually about 4 feet wide, and so must be used in an array to detect a wide area. Infrared sensors, such as lasers, are accurate for measuring speed and are often used for speed enforcement purposes.

Microwave Vehicle Detector Systems (MVDS) recognize vehicles by transmitting electromagnetic energy at the roadway. There are two technologies used for microwave detectors. Microwave Doppler sensors emit electromagnetic energy at a constant frequency that detects moving vehicles. Microwave radar emits electromagnetic energy in a frequency-modulated continuous wave that changes over time, and is used to detect stopped vehicles. Detectors are installed on a pole next to the road, or in a forward-looking configuration above the traffic lanes. Microwave detectors have been found to be unaffected by varying weather conditions.

Radar Detectors are installed on a pole next to the roadway. Using a sensor that detects vehicles in multiple lanes with a wide beam, radar detectors are most reliable when used to collect speed and count data on freeways. Since they do not

reliably detect stopped vehicles, they are not typically used at intersections. Maintenance is less costly because the devices are above ground.

Video Image Detectors (VID) are capable of measuring presence, speed, volume and occupancy data. Advanced software can analyze the video to detect incidents and dwell time. They are commonly used to help manage traffic incidents, recognize congestion on a roadway, identify vehicles, monitor intersections and for signal actuation. With this technology, video is collected with closed circuit cameras mounted on a pole at the intersection, either overhead or in a roadside configuration. VIDs are capable of covering multiple lanes up to several hundred feet, depending on the location of the camera. Equipment to process the images may be located adjacent to the camera or at an operations center.

Disadvantages of this technology are the complex installation and calibration procedures compared with other detection options. The cameras are susceptible to view obstructions such as shadows, occlusion, and objects on the camera lens such as ice, moisture, and cobwebs. Transitions from day and night lighting have also produced negative impacts on vehicle detection. Also, a video image detection system is relatively expensive to set up and may only be cost effective if it is able to replicate several detection zones. Due to the complexity of this technology, measuring traffic speeds with VIDs is more time consuming and subject to additional error.

The advantage of video image detectors is that under optimal conditions, field tests have shown them to produce very accurate volume and speed measurements. Video image processors can view multiple lanes and establish a large number of detection zones per lane. Thus, they can be cost-effective for areas with wide detection requirements, such as signalized intersections. VIDs are among the most reliable and efficient method of measuring vehicle occupancy. Depending on the configuration, mounting height, and direction (forward- or rear-facing), VIDs can determine vehicle occupancy for several lanes.

5.3.4.2 *Maintenance*

In-pavement induction loops are the most difficult to maintain because they require using traffic control to block lanes, and special equipment to repair or replace loops. Non-invasive detection devices are installed on poles and can be accessed with a bucket-truck as needed. Periodic adjustment of the detector may be necessary due to winds and vibration. The maintenance checklist for detection devices is included in **Appendix L**.

Additional systems that utilize detection technology include overheight warning systems and speed warning systems. Overheight systems often are used in advance of older structures with less than ideal clearance. Speed warning systems are utilized in areas that have been identified as high speed locations. These systems are site specific and target specific safety or operational concerns. Since these systems are used by MDOT at key locations, maintenance checklists are included in **Appendix M** and **N**, respectively.

5.3.4.3 *Placement*

The location of detectors depends on the purpose of the detection and the technology chosen. Detectors for use in signal actuation and timing are located at the intersection. Detectors for calculating system-level information are placed where traffic is free-flowing and is not influenced by signalized intersections.

System detectors are typically located on freeways or major arterials, in areas with high volumes. They may also be placed in areas with historically high crash rates if the detectors are intended to help notify traffic operators of potential incidents.

The number of lanes detected is dependent on the detection technology used. Invasive detectors, including inductive loops and microloop probes, must be placed in pairs to record speed, and can be used individually to record volume and occupancy data. Non-invasive detectors typically require one device in each location to record speed, volume, and occupancy data. New technologies have the ability to monitor up to five or six travel lanes at one location.

Cost is a major factor in determining which lanes have detection devices at each detection location. With non-invasive technologies that monitor several lanes with one device, there is no additional cost with detecting all travel lanes compared to just one. Having detection on all lanes provides the most traffic information and guarantees that all vehicles in a travel lane are detected. Depending on the number of detection locations, this approach can have high costs for installation and regular maintenance. Another approach is to have detection on only a single critical lane. This data then is used to estimate the traffic conditions on all lanes at that detection location. The quality of the traffic data may be sacrificed in this approach, but installation and maintenance costs of the detectors are minimized.

5.3.5 ITS Cabinet Selection

Contact the ITS IPO Coordinating Engineer for the most recently approved SP for ITS Cabinets. MDOT currently uses either a ground mounted cabinet (66” X 24” X 30”) or a pole mounted cabinet (46” X 24” X 24”).

5.4 Safety Systems

5.4.1 Smart Work Zones

More and more construction projects are including intelligent work zone technologies to increase the safety and capacity in the Construction Influence Area (CIA). In areas with a more limited ITS deployment, smart work zones can provide short term installations of ITS equipment. CCTV cameras, portable DMS and detection stations are the most often used components in smart workzones. These systems monitor the progression of traffic through the work zone and the CIA and inform approaching vehicles about the travel time and conditions. The equipment installed as part of these systems is usually provided by the contractor or sub-contractor and checked by MDOT Work Zone Safety and Mobility division. It does not require any additional operations or maintenance costs from the Department.

Other regions that have ITS infrastructure can develop more advanced work zone management strategies that supplement existing field equipment with contractor equipment to provide continuous coverage through the work zone and the CIA. The supplemental equipment is integrated with the infrastructure so the work zone and CIA can be monitored and operated from the existing TMC.

In some cases, the construction project will be installing ITS components. If feasible, the ITS portion should be constructed during the earlier phases of the project so the equipment

will be available for the remaining duration of the project. Construction phasing does not always allow this approach and temporary equipment may be required in the work zone until the new equipment is online.

5.4.2 Overheight Warning System

Overheight systems often are used in advance of older structures with less than standard vertical clearance. The system can include a height detector located in advance of the structure and a static sign with flashers that activate when a vehicle reached the predetermined threshold for acceptable height. Since these systems are approved technology applications by MDOT, maintenance checklists are included in **Appendix M**

5.4.3 Speed Warning System

Speed warning systems are utilized in areas that have been identified to have safety concerns due to high speeds. These systems are site specific and target specific safety or operational concerns. The system can include speed detectors connected to variable message sign that display the measured speed. The system could also integrate the detectors with a static sign and flasher combination. Maintenance checklists for the speed warning system are included in **Appendix N**.

5.5 Control Center

A control center – either called a traffic operations center (TOC) or a traffic management center (TMC) – is responsible for monitoring and operating ITS equipment. This center may be as small as one computer, or as large as a several rooms. Based on available devices, operators in the center may be responsible for monitoring CCTV camera images, posting messages on DMS, alerting police and FCP of incidents and updating incident data in the Advance Traffic Management System (ATMS) database that feeds the traveler information web site and the 511 information phone number. The ITS may be monitored and controlled from multiple locations, including laptops, individual offices, and the control center. Stations may be set up as permanent management centers, emergency management centers, or as viewing stations only. For example, camera images may be shared with media stations, local officials, or other municipalities.

Since management centers can take many forms, the following discussion will group them into two general categories: centers that can view the ITS device, and centers that can view and control the ITS devices.

View Only. Management centers that can only view ITS devices — including CCTV images, DMS messages and detector data — require just a few components, including a laptop or desktop computer along with the system software. The computer must be linked to the network via hard wire (LAN) or wireless (dial-up). The level of service depends on the speed of the connection and the type of ITS device.

View and Control. The primary management center will house the communication terminations hardware such as receivers, transmitters, servers and switches. The two most common elements in management centers are computers at workstations and televisions or screens to view the CCTV images.

5.6 Third Party Data Sources

Additional data collection can be achieved through Third Party data sources. This business model is growing in popularity and can offer a public agency a consistent cost for data without incurring

ongoing operations and maintenance costs associated with preventative maintenance, personnel and other resources. Third Party sources have been successful in providing CCTV images, detection data, and even assimilated traveler information from multiple sources.

5.6.1 Detectors/Probes for Speed Data

Third party solutions that use detection field devices and probe data can provide average travel speeds on corridors. This data can be purchased by public sector agencies and media outlets with value-added components such as speed mapping and estimated travel times. The detection devices require minimal power and communications based on their operational approach. The device also requires a minimal footprint within the right-of-way. The current solution in the Metro Region, *Traffic.com*, collects data approximately every five minutes and packages the data for delivery to MITSC. This solution eliminates any operations and maintenance costs to the Department and provides average travel speeds along multiple corridors for a set, reliable price.

Additional data concerning the Traffic.com approach can be found at the following web site: *http://www.traffic.com/*

5.6.2 TrafficLand camera images

To increase the CCTV camera deployment, the Department developed a partnership with TrafficLand to install CCTV cameras along the right-of-way and collect images of traffic conditions. In exchange, the Department is provided access to images from the installed cameras. The images are available in MITSC and the West Michigan TMC. The images also are shared through the MIDrive web site (*http://www.midrive.org*). Similar to other third party hosting, the Department incurs no operations and maintenance costs.

Additional data concerning TrafficLand can be found at the following web site: *http://www.trafficland.com/*

5.7 Operations and Maintenance

Costs and resources associated with operations and maintenance are an important step in developing an ITS project. It is very important for the project manager to understand the commitment associated with the system being developed. To assist in planning the necessary resources, several tools are being developed that demonstrate the level of effort required to operate and maintain ITS deployment.

5.7.1 Maintenance checklist

As presented in **Section 5**, preventative maintenance checklists have been developed specific to certain devices. The checklists present maintenance tasks that should occur at specified intervals, either three month, six month or annually. Costs associated with these maintenance activities are closely related to the size of the deployment and the geographic area covered by the system.

5.7.2 Operations requirements

Along with maintaining the field equipment and central hardware, there are certain daily functions that are required in order to obtain the highest benefit once the system is deployed. Obviously, these daily functions and the amount of time required are closely dependent on the size of the complexity of the system.

5.8 Consultant Services

A consultant may provide the public agency owner many different services on an ITS project, beginning with the systems engineer and planning phases. A consultant may be retained to develop a systems engineering document, beginning with documenting the concept of operations voiced by the stakeholders. A consultant can work with the agency to create the planning-level layout of the ITS project, and is often involved in meeting with and gathering input from agency stakeholders and the public.

As the project moves into the design phase, consultants may continue to assist the project's owner. The following definitions describe several types of contracts and contracting techniques and the role of consultants for each.

In October 1997, the FHWA published "FHWA Federal-Aid ITS Procurement Regulations and Contracting Options." This report was written to help state and local agencies select the appropriate contracting method for ITS projects. ITS projects are defined as those employing advanced technologies and systems to improve the safety and efficiency of the surface transportation system. They typically involve software development or the integration of different technologies, both of which change rapidly, which present challenges that are different from those found in traditional civil engineering projects. While it does not specifically address traffic signal system projects, these meet the definition of ITS projects so it would apply to these as well.

This report lists several types of contracts and describes their applicability to ITS projects. As a note, MDOT decides whether the project is a design-build or a design-bid-build early on in the process without the consultant stating otherwise. The contracts include:

- **Traditional Construction Contracts**. Services that fall under this type of contract hinge on what is considered "construction." Typically, services such as software development, systems integration and systems engineering are not considered construction. The installations of field devices, communications conduits, etc., are construction projects. These must be let through an open-bidding process and are typically awarded to the low bidder.
- **Engineering and Design Services Contracts**. This includes ITS professional services such as software engineering, software development, systems engineering, systems integration, system testing, etc. These are typically awarded through a two-step process of qualification-based selection followed by competitive negotiations. Each state typically has its own rules. Additional information can be found at the following website: *http://www.michigan.gov/mdot/0,1607,7-151-9625_21540.html*
- **Non-Engineering/Non-Architectural Contracts**. These apply to ITS projects such as field operational tests and early deployment planning studies. These are not applicable to signal system upgrade projects.

The report also lists three types of contracting techniques and how they can be used.

- **Design-Bid-Build**. This is a traditional three-step process by which the project is designed either in-house or by a consulting firm under an engineering services contract, and then let for construction by a traditional construction contract (low-bid). This is suitable for typical construction projects, but not as favorable for an ITS deployment. By the time construction begins, technology specified in the design stage could be out of date. It is recommended that alternative procurement strategies be explored when possible. Some of these strategies will allow for evaluation of vendors, public/private partnerships, or other approaches that do not limit the project manager into a construction method based solely on price.
- **Design-Build**. Under a design-build contract, a single firm provides design and construction services under a single contract. This is suitable for contracts that are complex and require a

great deal of coordination between construction and design or for performance-based specifications. However, some control may be lost over specific design or implementation details.

- **Systems Manager**. Under this method, all project design and interface functions are performed by one consultant under engineering and design services contracts and all construction activities are performed by various construction contracts. This approach has the benefit of having a single firm selected on the basis of qualifications that is in charge of system design, software development and integration activities, etc., while procuring construction activities under low-bid contracts.

"NCHRP Report 560: Guide to Contracting ITS Projects," adds the following:

- **Systems Integrator.** This is similar to a Systems Manager except that the integrator is not involved in the planning and design stages. The systems integrator provides all of the professional services associated with the systems implementation except for the provision of equipment, electrical contracting and construction.
- **Commercial-off-the-shelf (COTS)**. COTS systems do not require the oversight of a Systems Integrator. They are commodity products and may include variable message signs, traffic signal controllers, radios or computers. It also may include software and systems. Traffic signal systems are sometimes considered COTS systems because multiple vendors offer similar solutions with similar features. For example, when comparing similar vehicles a car buyer can make a selection based on expanded services (i.e. customer service or reliability) and not just based on price or appearance.

6. ITS DESIGN RESOURCES

This section contains a collection of checklists and example designs that a Project Manager can easily reference during the project development. The background and technical details were presented in earlier sections of the document and will not be explained in great detail in Section 6.

- High Level Checklist for Design Process
- Systems Engineering Checklist
- Concept of Operations Checklist
- Pre-Design and Scoping Checklist
- Checklist for Developing an RFP
- Checklist for ITS Plan Sheet Review
- Checklist for General Plan Sheet Review
- Standard Notes
- Example Plan Sheets and Details
    - MVDS Mounting
    - MVDS Wiring
    - Pole Mounting
    - CCTV
    - DMS Power
    - DMS Wiring
    - ESS Wiring
    - Lightning Protection
    - Power Service
    - Solar Power
    - Surveillance Systems
    - Tower Wiring

Checklist 1. High Level Checklist for Design Process

	Step	References	Complete
1	**Determine Funding Choices / Options**	Funding for ITS Projects, refer to **Section 2.1** (from this document)	☐
2	**Ensure Project is Included in the Appropriate Programming Documents**	Programming Documents, refer to **Section 2.2** (from this document)	☐
3	**Identify Regional Architecture**	ITS Regional Architecture, refer to **Section 2.3.1** and **Section 3** (from this document)	☐
4	**Reevaluate Regional Deployment Plan**	Regional Deployment Plan, refer to **Section 2.3.2** (from this document)	☐
5	**Determine if Concept of Operations is Needed**	Concept of Operations, refer to **Section 2.3.3** and **Section 3** (from this document)	☐
6	**Define Project Scope**	Project Scope, refer to **Section 2.3.4** and **Section 4** (from this document)	☐
7	**Estimate Design and Construction Time**	Design Phase, refer to **Section 2.3.5** (from this document) Construction, refer to **Section 2.3.6** and **Section 5** (from this document)	☐
8	**Establish Acceptance Testing Process**	Acceptance, refer to **Section 2.3.7** (from this document)	☐
9	**Identify Operations and Maintenance Resources**	Operations and Maintenance, refer to **Section 2.3.8** (from this document)	☐
10	**Enter Information into one of Several Tool Systems to Ensure Adequate Distribution of Time and Money is Allocated**	Project Management Tools, refer to **Section 2.4** (from this document)	☐

Checklist 2. Systems Engineering Checklist

	Step	References	Complete
1	**Find the Regional Architecture.** *Each region has an existing regional architecture available for reference.*	*www.MDOTITSPlanning.com*	☐
2	**Identify portions of the Regional Architecture** *Complete the Architecture Conformance and Maintenance Documentation Form. Confirm any portions of the Regional Architecture that may need to be updated.*	Regional Architecture Conformance and Maintenance Form	☐
3	**Stakeholder Roles and Responsibilities** *As stated in the Concept of Operations Checklist, Are the operations described from the viewpoints of all key stakeholders? Is it clear who is doing what? Will there be enough staff for the responsibilities outlined?*	Concept of Operations Checklist Concept of Operations Template	☐
4	**Definition of Requirements** *Reference the Concept of Operations for the System. If the proposed Template was used, the requirements will be in Sections 8, 9, and 10.*	Concept of Operations Checklist Concept of Operations Template	☐
5	**Alternative Configurations** *Were alternative configurations considered? Were alternative configurations selected for the system?*	Design section of BODD	☐
6	**Procurement Options** *What are the identified funding sources for the project? Do they introduce any limitations on the design of the system?*	Program Budget Forecaster	☐
7	**ITS Standards** *What standards are associated with project in the Regional Architecture? Are there other Standards that should be identified for the project?*	Regional Architecture *http://www.standards.its.dot.gov/*	☐
8	**Requirements Testing** *Are there defined testing procedures to evaluate and validate the requirements of the system? The system should pass all of the tests prior to acceptance.*		☐
9	**Operations and Maintenance** *Are the operations and maintenance roles and responsibilities outlined in the Concept of Operations adequate for the system?*	Concept of Operations Operations Requirements, refer to **Section 5.7** (from this document) Maintenance Requirements listed for each device type	☐

Checklist 3. Concept of Operations

	Step	References	Complete
1	**System** *Is the reason for developing the system clearly stated? Are goals, objectives, and vision evident?*		☐
2	**Concept of Operations Documentation** *Is the Concept of Operations documented in an easily understood manner?*		☐
3	**Concept of Operations Review** *Has the Concept of Operations been reviewed and accepted by the stakeholders?*		☐
4	**Operations** *Are the operations described from the viewpoint of all key stakeholders? Is it clear who is doing what? Will there be enough staff for the responsibilities outlined?*		☐
5	**Maintenance** *Is the maintenance described from the viewpoint of all key stakeholders? Is it clear who is doing what? Is it clear of the cost?*		☐
6	**Operational Scenarios** *Are there clear and complete descriptions of normal operational scenarios? Are both normal and failure scenarios included?*		☐
7	**Maintenance Scenarios** *Are there clear and complete descriptions of normal maintenance scenarios? Are both normal and failure scenarios included?*		☐
8	**Constraints and Metrics** *Are both constraints and metrics in the system?*		☐
9	**External Environment** *Is the external environment described? Does it include required interfaces to existing systems?*		☐
10	**Operational and Support Environment** *Are both operational and support environment included? Does it include maintenance?*		☐
11	**Alternatives** *Are both operational approaches (e.g. centralized vs. distributed) described and the selected approach justified?*		☐

Template 1. Concept of Operations Template

1.0 Purpose of Document

This section is a brief statement of the purpose of this document. It is a description and rationale of the expected operations of the system under development. It is a vehicle for stakeholder discussion and consensus to ensure that the system that is built is operationally feasible. This will briefly describe contents, intention, and audience. One or two paragraphs will suffice.

2.0 Scope of Project

This short section gives a brief overview of the system to be built. It includes its purpose and a high-level description. It describes what area will be covered and which agencies will be involved, either directly or through interfaces. One or two paragraphs will suffice.

3.0 Referenced Documents

This optional section is a place to list any supporting documentation used and other resources that are useful in understanding the operations of the system. This could include any documentation of current operations and any strategic plans that drive the goals of the system under development.

4.0 Background

Here is a brief description of the current system or situation, how it is used currently, and its drawbacks and limitations. This leads into the reasons for the proposed development and the general approach to improving the system. This is followed by a discussion of the nature of the planned changes and a justification for them.

5.0 Concept for the Proposed System

This section describes the concept exploration. It starts with a list and description of the alternative concepts examined. The evaluation and assessment of each alternative follows. This leads into the justification for the selected approach. The operational concept for that selected approach is described here. This is not a design, but a high-level, conceptual, operational description. It uses only as much detail as needed to develop meaningful scenarios. In particular, if alternative approaches differ in terms of which agency does what, that will need to be resolved and described. An example would be the question of whether or not a regional signal system will have centralized control.

6.0 User-Oriented Operational Description

This section focuses on how the goals and objectives are accomplished currently. Specifically, it describes strategies, tactics, policies, and constraints. This is where the stakeholders are described. It includes who users are and what the users do. Specifically, it covers when, and in what order, operations take place, personnel capabilities, organizational structures, personnel and inter-agency interactions and types of activities. This may also include operational process models in terms of sequence and interrelationships.

7.0 Operational Needs

Here is a description of the vision, goals and objectives, and personnel needs that drive the requirements for the system. Specifically, this describes what the system needs to do that it is not currently doing.

8.0 System Overview

This is an overview of the system to be developed. This describes its scope, the users of the system, what it interfaces with, its states and modes, the planned capabilities, its goals and objectives, and the system architecture. Note that the system architecture is not a design [that will be done later]. It provides a structure for describing the operations, in terms of where the operations will be carried out, and what the lines of communication will be.

9.0 Operational Environment

This section describes the physical operational environment in terms of facilities, equipment, computing hardware, software, personnel, operational procedures and support necessary to operate the deployed system. For example, it will describe the personnel in terms of their expected experience, skills and training, typical work hours and other activities [e.g., driving] that must be or may be performed concurrently.

10.0 Support Environment

This describes the current and planned physical support environment. This includes facilities, utilities, equipment, computing hardware, software, personnel, operational procedures, maintenance, and disposal. This includes expected support from outside agencies.

11.0 Operational Scenarios

This is the heart of the document. Each scenario describes a sequence of events, activities carried out by the user, the system, and the environment. It specifies what triggers the sequence, who or what performs each step, when communications occur and to whom or what [e.g., a log file] and what information is being communicated. The scenarios will need to cover all normal conditions, stress conditions, failure events, maintenance, and anomalies and exceptions. There are many ways for presenting scenarios, but the important thing is that each stakeholder can clearly see what his expected role is to be.

12.0 Summary of Impacts

This is an analysis of the proposed system and the impacts on each of the stakeholders. It is presented from the viewpoint of each, so that they can readily understand and validate how the proposed system will impact their operations. Here is where any constraints on system development are documented. Metrics or performance measures for assessing system performance are also included here.

13.0 Appendices

This is a place to put a glossary, notes and backup or background material for any of the sections. For example, it might include analysis results in support of the concept exploration.

Checklist 4. Pre-Design and Scoping Checklist

	Step	References	Complete
1	**Assemble Systems Engineering Documents.** *Concept of Operations, Regional Architecture components, High Level Requirements*		☐
2	**Determine the Complexity of the Project.** *Is the project a complete system implementation or an add-on to a previously identified project?*		☐
3	**Inventory Existing ITS** *Define the "vicinity" and confirm the existing technology and agencies.*		☐
4	**Constructability and Pre-Scope Walkthrough** *Identify elements that would or could affect the design.*		☐
5	**Determine the Environment of the Project** *Is the project in an urban or rural environment?*	Matrix of environmental characteristics.	☐
6	**Identify ITS Components to Include** *What field devices and communication solution will be included in the project? (Site Review)*		☐
7	**Refine Project Scope** *Develop a project scope that defines the vicinity, or study area, the existing technology, proposed technology, and the environment of the proposed project.*		☐

Checklist 5. Developing an RFP

	Step	Complete
1	**Write RFP** *Estimated amount must be within 10% of price proposal. It needs to include scope, start & end date, prequalification, project tier, scoring criteria* **References:** http://www.michigan.gov/documents/MDOT_Consultant-Vendor_Selection_Guidelines-0106_145222_7.pdf	☐
2	**Submit for Review** *Submit to Consultant Services for review.*	☐
3	**RFP Review Panel** *If the project is more than $1M, then the team must include CSRT board member*	☐
4	**Post RFP**	☐
5	**Receive Proposals from Consultants**	☐
6	**Panel Reviews and Scores Proposals** *Review the reviews and scores from the panel of the proposals submitted* **References:** Score Sheets http://mdotwas1.mdot.state.mi.us/public/webforms/public/5100C.pdf	☐
7	**Package to CSRT** *Submit the package to CSRT – include the cover sheet and the score sheets signed by the panel* **References:** http://mdotwas1.mdot.state.mi.us/public/webforms/public/5100D.pdf http://www.michigan.gov/mdot/0,1607,7-151-9625_21540.html	☐
8	**CSRT Approval**	☐
9	**Package to Contract Analyst** *The package submittal includes: scope, AD Board questions, project manager checklist, price proposal, original signed cover letters (prime and sub)*	☐
10	**PM Review and Negotiate Price Proposal** *The price must be within 10% of the estimate*	☐
11	**AD Board Approval**	☐
12	**Notice to Proceed**	☐

Checklist 6. ITS Plan Sheet Review Checklist

	Step	References	Complete
1	Proposed Devices		☐
2	Device Location State Plane Coordinates		☐
3	Device Offset From Edge of Pavement		☐
4	Proposed Conduit		☐
5	Proposed Fiber Optic Cable		☐
6	Proposed Underground/Overhead Electric Line		☐
7	Handhole/Pull Boxes		☐
8	Electric Power Source (Pole/Transformer)		☐
9	Approximate Antenna Azimuths		☐
10	Contact Information for Power Company		☐
11	Call Out Devices and Components		☐
12	Pay Items/Quantities		☐
13	Barrier Protection (Guardrail, Concrete Barrier)		☐
14	Specific Notes for Device Configurations		☐
15	Vehicle Detection Zones (for Detectors)		☐
16	Existing ITS Infrastructure		☐

Checklist 7. General Plan Sheet Review Checklist

	Step	References	Complete
1	Base Mapping/Existing Topography		☐
2	Sheet Name		☐
3	Scale		☐
4	North Arrow		☐
5	Right of Way		☐
6	Utilities and Types/Flagged		☐
7	Utility Easements		☐
8	Road Names		☐
9	Label Sections, Townships, Ranges Cities		☐
10	General Notes for the Contractor		☐
11	Soil Boring/Test Holes		☐
12	Benchmarks/Control Points		☐

APPENDIX A – CMAQ GRANT APPLICATION

CONGESTION MITIGATION AND AIR QUALITY (CMAQ)
REQUIRED APPLICATION FORM Call for Projects 2007-2009

This form MUST be completed IN ITS ENTIRETY for a project to be considered for funding

Fiscal Year	2007 2009	**Phase***	C A	**Control Section**	82021 82022 82023
BMP*	0.00 0.00 0.00	**EMP***	6.08 16.611 4.69	**Length**	27.20 (9.0 for this project)

County	Wayne
Region *(MDOT Region)*	Metro
Route Name *(Trunkline, Street, Areawide, Countywide)*	I-94
Location Description *(Short description where the project is located)*	West of I-275 easterly to East of Ecorse Road
Work Description *(Short description of work being performed. Please provide enough information for eligibility to be determined)*	MITS Equipment and Infrastructure for traffic monitoring and notification to increase progression. The amount requested for the A phase will not complete the entire project, but will complete a functioning traffic monitoring and notification system from west of I-275 to east of Ecorse. (The total amount needed for construction of the whole thing is $14,000,000+. Calculations for emissions done for entire amount. Funding for remainder of A phase will come from future Congestion program grant or statewide ITS funding template).
Applicant/Phone *(Project/System Manager)/Phone#*	Michele Mueller 248-483-5133
Jurisdiction *(State/Local/Transit)*	State

Project Cost	Federal	State	Local	Total
C A	1,092,000 3,830,000	957,500.00		1,092,000 4,787,500
Emission Calculations	VOC	NOx	CO	PM2.5

(From calculations worksheets. Attach worksheets)	-12.817	6.408		
Cost per Kilogram *(From worksheets)*	VOC $191.70	NOx $383.41	CO	PM2.5

Additional Information:

A grant number will be assigned after the project has been approved. If you have any questions regarding this application, please contact Pete Porciello at (517) 335-2603.

*May not apply to Local Applications. (Phase, Beginning Mile Point - BMP, Ending Mile Point - EMP)

WORKSHEET 8
TRAFFIC MONITORING PROGRESSION IMPROVEMENTS-AUTOMATED (ATMS)

Project Name: I-94
Intersection: West of I-275 to East of Ecorse Road
Submitter: Michele Mueller
Fiscal Year: 2007 & 2009

Directions: **(1)** Copy this file to your hard drive and rename it with the project name. **(2)** Fill in yellow highlighted cells with the appropriate measurements obtained from your field data, models, or the emissions factors tables provided (Grayed in cells will auto calculate). You may manually calculate using the printed formulas in the "Description of Data Items/Formula" cell spaces. **(3)** Attach the completed worksheet to the reuired application form along with any diagrams or additional worksheets used. **(4)** The project name and the values shown in the brown boxes should match values on the required application. **(5)** If you have multiple intersections in your project, complete and save this worksheet, giving it a different name for each intersection. Complete all worksheets, and add up ALL the "Changes in Emissions" (Kg/day). This total is used to calculate "Cost per Kilogram over the life of the project" by using worksheet "W00_cost module for multiple worksheet projects.xls". Emissions on the application will be the total of VOC and/or NOx emissions totaled respectively from all appliable worksheets.

NOTE: This is not an application form, this is only a tool used to calculate emissions that are needed for the CMAQ application. You must fill in all the required/highlighted fields. (if this is a part of a series in a corridor the total sum must be reported on the application)

Contact: If you should have any trouble with these worksheetsplease contact Pete Porciello (517-335-2603).

EMISSION CALCULATIONS

Line No.	Description of Data Item/Formula	VOC	NOx	NOx
	VMT (mi)			
1	Principal Arterial Freeway	112,427	112,427	
2	Principal Arterial Non-Freeway			
3	Minor Arterial			
4	Collector			
5	Local			
	Before: Daily Travel Speeds (mph)			
6	Principal Arterial Freeway	45.000	45.000	
7	Principal Arterial Non-Freeway			
8	Minor Arterial			
9	Collector			
10	Local			
11	Expected increase in ALL Travel Speeds	8.000	8.000	
	After: Daily Travel Speeds (mph)			
12	Principal Arterial Freeway = L6+L11	53.000	53.000	0.000
13	Principal Arterial Non-Freeway=L7+L11	8.000	8.000	0.000
14	Minor Arterial = L8+L11	8.000	8.000	0.000
15	Collector = L9+L11	8.000	8.000	0.000
16	Local = L10+L11	8.000	8.000	0.000
	Before: Emissions Factor (see worksheet) (g/mi)			
17	Principal Arterial Freeway (speed on L6)	0.907	0.828	
18	Principal Arterial Non-Freeway (speed on L7)			
19	Minor Arterial (speed on L8)			
20	Collector (speed on L9)			
21	Local (speed on L10)			
	After: VOC Emission Factors (See worksheet) (g/mi)			
22	Principal Arterial Freeway (speed on L12)	0.869	0.847	
23	Principal Arterial Non-Freeway (speed on L13)			
24	Minor Arterial (speed on L14)			
25	Collector (speed on L15)			
26	Local (speed on L16)			
	Change in VOC Emission Factors (g/mi)			
27	Principal Arterial Freeway = L17-L22	0.038	-0.019	0.000
28	Principal Arterial Non-Freeway = L18-L23	0.000	0.000	0.000
29	Minor Arterial = L19-L24	0.000	0.000	0.000
30	Collector = L20-L25	0.000	0.000	0.000
31	Local = L21-L26	0.000	0.000	0.000
	Daily VOC Emissions Reduced (g/day)			
32	Principal Arterial Freeway = L1*L27	4,272.226	-2,136.113	0.000
33	Principal Arterial Non-Freeway = L2*L28	0.000	0.000	0.000
34	Minor Arterial = L3*L29	0.000	0.000	0.000
35	Collector = L4*L30	0.000	0.000	0.000
36	Local = L5*L31	0.000	0.000	0.000
37	Compairative purpose only: Convert to Tons/Year =(L38*.0011Tons) (Tons/Yr)	-1.128	0.564	0.000
38	Annual emissions reduced=L39*240 days (Kg/Yr)	-1,025.334	512.667	0.000

39	Total daily emissions reduced=(L32+L33+L34+L35+L36)(-1)/1000g (Kg/day)	-4.272	2.136	0.000

Comments:

40	Project design life in years (Yrs)	25	25	
41	Total project cost for this application (CMAQ plus Match) ($)	$4,787,500.00	$4,787,500.00	
42	Emission **reduction** over the life of the project=L37*L40 (Tons/Life)	28.197	-14.098	0.000
43	Emission **reduction** over the life of the project=(L38*L40) (Kg/Life)	25,633.356	-12,816.678	0.000
44	Cost per Ton over the life of the project=(L41/L42) ($/Tons/Life)	$169,789.42	-$339,578.85	#DIV/0!
45	Cost per Kilogram over the life of the project=(L41/L43) ($/Kg/Life)	$186.77	$373.54	#DIV/0!

APPENDIX B – ITS PROJECT CALL AND PROJECT CALL RESPONSE

Metro Region ITS Projects 2009

CS	ROUTE	LOCATION	WORK TYPE	ITS TOTAL	PLAN COMP. DATE	SCHED. LET DATE	REMARKS	JOB NUMBER	OBLIGATED	Packaging, Letting, Combining etc Information
(A) ITS PROJECT ELEMENTS INSTALLED OR PART OF ANOTHER PROJECT										
76902	M-39	Wayne County	Infrastructure replacement	$400,000			Costs are associated with replacement of the existing DMS signs and foundations, including communications infrastructure, computer systems and software, and user interfaces housed at the Michigan Intelligent Transportation System Center (MITSC) needed for			This project is being packaged with M-39 bridge projects (JN 82797), Matt Chynoweth is the PM for that project. JN 82797 is being moved to 2010 for construction so this project will move to 2010 for funding through the CMAQ program.
			Total	$400,000						
(B) OPERATIONAL TARGETS										
N/A										
(C) FIELD MAINTENANCE TARGETS										
		Michigan Intelligent Transportation System Center (Region)	Infrastructure replacement	$1,500,000			Costs are associated with replacement of the existing DMS signs and foundations, including communications infrastructure, computer systems and software, and user interfaces housed at the Michigan Intelligent Transportation System Center (MITSC) needed for			
			Total	$1,500,000						
(D) SOFTWARE MAINTENANCE										
		N/A								
			Total							
(E) ITS ON-GOING SERVICES PROJECTS										
	Region	Michigan Intelligent Transportation System Center (Region)	Inicident Response Vehicle	$300,000			Maintain incident response vehicle program (vehicles with equipment such as temporary traffic control devices to effect lane control measures) with three vehicles and up to two counties			
	Region	Michigan Intelligent Transportation System Center (Region)	In-vehicle data terminals	$200,000			Freeway Courtesy Patrol (FCP) vehicles would be equipped with in-vehicle data terminals and the associated communication equipment and software to facilitate incident response and dispatching.			
			Total	$500,000						
(F) ITS IMPROVE AND EXPAND										
84917	I-75	Wayne and Oakland County	I-75 Integrated Corridor Management implementation	$500,000			The cost includes the cost of upgraded and new cameras, power feeds, and communications infrastrucutre to support the I-75 Incident Corridor Management program			
			Total	$500,000						
(G) ITS EPE AND PE										
	Region	Michigan Intelligent Transportation System Center (Region)	Ramp metering and monitoring study	$200,000			This project includes the cost of initiating a study to evaluate a region-wide ramp metering system, and to evaluate the feasibility of placing advanced DMS signs on high-volume trunkline arterials approaching freewway interchanges.			
			Total	$200,000						

Total Region Template	$3,100,000
Total Projects	$3,100,000

APPENDIX C – MPINS AND MFOS SCREEN SHOTS

Mueller12 12 45 32 PM 8/20/2008

MUELLER12 - MAP Project Information System 2010 [illegible]

File Action List Show Admin Reports Window Help

List Mgr | Concept | Jobs | Environ. | Chg Req | Task | Job Loc | Help | Exit

Validate | Save | Close

New Concept

Job # | CS# | Route

Author MUELLER MICHELE R | Job Type Trunkline | Proj. Manager To Be Assigned

Header | CS/PR | Road Cost | Bridge Cost | ACCS | Env. Info | Check List | P/PMS

Template | Let Ind Let Non Let

Category

Work Type

Fix Life | Start Date 00/00/0000

Trans System Highway | Recm Plan Comp 00/00/0000

Region | Recm Let Date 00/00/0000 | Control Section and Route are also required fields for a new concept.

TSC | Submitted Date 00/00/0000

Work Desc(Rpt) | Approved Date 00/00/0000

Status Not Submitted

Location(Rpt)

Location

Work Desc

Reason

Ready

Start | Novell GroupWise - Mailbox | AOL Mail (50) - Microsoft... | Applications - Microsoft E... | MetaFrame Presentation... | MUELLER12 - MAP Pr... | 10:45PM

Concept Screens

Muellerm2 12 46 56 PM 8/20/2009

MUELLERM2 - MAP Project Information System 2000 (CP INSP)

File Action List Show Admin Reports Window Help

List Mgr | Concept | Jobs | Environ. | Chg Req | Task | Job Loc | Help | Exit

Validate | Insert Row | Delete Row | Save | Close

New Concept

Job # | CS# | Route

Author: MUELLER MICHELE R | Job Type: Trunkline | Proj. Manager: To Be Assigned

Header | CS/PR | Road Cost | Bridge Cost | Notes | Env. Info | Check List | P/PMS

CS/PR | Location Search | Control Section | Physical Reference

CS/PR Details

CS No.	Route Name	CS BMP	CS EMP

Ready

Start | Novell GroupWise - Mailbox | AOL Mail (50) - Microsoft... | Applications - Microsoft I... | MetaFrame Presentation... | MUELLERM2 - MAP Pr... | 12:46PM

Mueller:2 12:47:01 PM 8/20/2008

MUELLERM2 - MAP Project Information System 2000 (MPIS 9.0)

File Action List Show Admin Reports Window Help

List Mgr | Concept | Jobs | Environ. | Chg Req | Task | Job Loc | Help | Exit

Validate | Insert Row | Delete Row | Save | Close

New Concept

Job # | CS# | Route

Author: MUELLER MICHELE R | Job Type: Trunkline | Proj. Manager: To Be Assigned

Header | CS/PR | Road Cost | Bridge Cost | Accts | Env. Info | Check List | P/PMS

Work Item

- (•) Mainline Pavement
- ( ) ROW
- ( ) Drainage
- ( ) Maintaining Traffic
- ( ) Geometric Improvement
- ( ) Permanent Traffic
- ( ) Nonmotorized
- ( ) Misc.
- ( ) Environmental
- ( ) Safety
- ( ) Cont/Mobil/Infl
- ( ) EPE/PE/CE

Road Info/Bridge Ratings

Project Total: 0

Description	Amount	Comment
Aggregate BSE/Surf		
Chip Seal		
Cncrt Pvmt Rpr (Jt Log)		
Cold Mill		
Concrete Mainline		
Crack Seal		
	0	

Ready

Start | Novell GroupWise - Mailbox | AOL Mail (90) - Microsoft... | Applications - Microsoft I... | MetaFrame Presentation... | MUELLERM2 - MAP Pr... | 12:47PM

Mueller2 12:47:06 PM 8/20/2008

MUELLERM2 - MAP Project Information System 2010 [illegible]

File Action List Show Admin Reports Window Help

List Mgr | Concept | Jobs | Environ. | Chg Req | Task | Job Loc | Help | Exit

New Concept

Job # | CS# | Route

Author MUELLER MICHELE R | Job Type Trunkline | Proj. Manager To Be Assigned

Header | CS/PR | Road Cost | Bridge Cost | Adjst | Env. Info | Check List | P/PMS

Adjacent Jobs	No	Work outside toe of slope	No
Crosses Streams/Lakes/Drains	No	Contaminated sites in area	No
Detour or road/ramp closure	No	Displacements of Res/Business	No
Enhancement job	No	Historic Bridge	No
Heritage Route	No	Other Environmental Issues	No
Over 5 acres earth disturbance	No	Over 1 acre earth disturbance	No
Public Controversy	No	ROW/Grading Permit on Farmland	No
ROW/Grading Permit needed	No	ROW/GP on Rec Property	No
Riprap required	No	Tree removals	No
Work outside extng shldr/curbs	No	Widening of road or bridge	No
Bridge Painting	No		

Environmental Information Required ☑

Comments: Adjacent Jobs

Validate | Save | Close

Ready

Start | Inbox - GroupWise - Mailbox | AOL Mail (50) - Microsoft... | Applications - Microsoft L... | MetaFrame Presentation... | MUELLERM2 - MAP Pr... | 12:47PM

Mueller12 12:47:09 PM 8/20/2008

MUELLER12 - MAP Project Information System (MPIS)

File Action List Show Admin Reports Window Help

List Mgr | Concept | Jobs | Environ. | Chg Req | Task | Job Loc | Help | Exit

Validate | Save | Close

New Concept

Job # | CS# | Route

Author MUELLER MICHELE R | Job Type Trunkline | Proj. Manager To Be Assigned

Header | CS/PR | Road Cost | Bridge Cost | Actual | Env. Info | Check List | P/PMS

Characteristics -Section I

Const Length 0.000 | Traffic ADT | Start Date 00/00/0000

Of Structures: Small | Medium | Large | Other

Road | Environ Type | Dev Class

Characteristics Section II

Wet Lands Involvement		Stream Crossing/Flood Plains	
Local Variance Req.		Navigable Waterways Impacted	
FHWA Involvement		Railroad Companies Impacted	
Local Agreement Req.		Municipal Utilities Impacted	
Constructed Under Traffic		Signal Locations Impacted	
Coastal Zone Involvement		Noise Walls Impacted	
Subgr Wk/WkOut Exst Shldrs		Railroad Over/Under Highways	
Airport Involvement		Private Utilities Impacted	
EPE Corridor mapping		ROW Parcels	
Electrical Involvement		Relocation Units	
Permanent Signing		Grading Permits	
Value Engineering		Type of Topographic Survey	

Ready

Start | Novell GroupWise - Mailbox | AOL Mail (50) - Microsoft... | Applications - Microsoft I... | WebFrame Presentation... | MUELLER12 - MAP Pr... | 12:47PM

Mueller2 12 47 36 PM 8-29-2008

MUELLERM2 - MAP Project Information System 2000 (PROD-E)

File Action List Change Request Show Admin Reports Window Help

List Mgr | Concept | Jobs | Environ. | Chg Req | Task | Job Loc | Help | Exit

Save | Close

Job Information [Job # 104007] [Read Only]

Job# 104007 | C.S# 82900 | Route County Wide

Project # 145289 | Job Type Trunkline | Proj. Manager MUELLER MICHELE R

Job Info. | CS/PR | Phase Cost | Task Status | Milestone Status | Phase Info. | Structure Info. | Change Request | Environm...

Status Programmed | Let Ind. Let / Non-Let

Work Type Traffic Signals | Non Let Reason Negotiated Contract

Federal Aid Other Federal-Aid System | Work Auth Id

FHWA Oversight | TSC n/a | Fix Life

Trans System Highway | Loc Desc(Rpt) Various locations in Wayne County

Work Desc(Report) Signal Retiming | Loc Desc Up to 70 locations along trunklines in Wayne County

Work Desc Signal retiming CMAQ Grant #08130

Est. DBE %

Job Relation | Job Id

Environ. Clear | Design Hearing | Survey

P. ROW Plans | F. ROW Plans | Plan Completion 08/02/2010

ROW Certification | Approved Let date 08/01/2008 | Act Let Date

Ready

Start | Novell GroupWise - Mailbox | AOL Mail (50) - Microsoft... | Applications - Microsoft I... | NetsFrame Presentation... | MUELLERM2 - MAP Pr...

MPINS Project info

Mueller12 12 47 42 PM 8 20 2008

MUELLERM2 - MAP Project Information System [MUGFINS]

File Action List Change Request Show Admin Reports Window Help

List Mgr | Concept | Jobs | Environ. | Chg Req | Task | Job Loc | Help | Exit

Job Information [104007] (Read Only)

Job# 104007 C.S# 82900 Route County Wide

Project # 145289 Job Type Trunkline Proj. Manager MUELLER MICHELE R

Job Info. | CS/PR | Phase Cost | Task Status | Milestone Status | Phase Info. | Structure Info. | Change Request | Environm...

Road Info/Bridge Ratings

Control Section | Physical Reference

CS/PR Details

CS: 82900, County Wide, 0 - 0 M

PR Ver:-1,9999999, County V

CS#	Rte Name	BMP	EMP
82900	County Wide	.000	.000

Total Length

Ready

Start | Novell GroupWise - Mailbox | AOL Mail (50) - Microsoft... | Applications - Microsoft I... | MetaFrame Presentation... | MUELLERM2 - MAP Pr...

Mueller2 12 47 48 PM 8 20 2008

MUELLERM2 - MAP Project Information System [illegible]

File Action List Change Request Show Admin Reports Window Help

List Mgr | Concept | Jobs | Environ. | Chg Req | Task | Job Loc | Help | Exit

Job Information [illegible] (Read Only)

Job# 104007 C.S# 82900 Route County Wide

Project # 145289 Job Type Trunkline Proj. Manager MUELLER MICHELE R

Job Info. | CS/PR | Phase Cost | Task Status | Milestone Status | Phase Info. | Structure Info. | Change Request | Environm...

Phase	Status	Total	Cost To Date	Federal	State	Local	Const. Cost
EPE	Programn	300,000	0	300,000	0	0	0
		300,000	0	300,000	0	0	0

Details

Template Congestion Mitigation and A

Employee MUELLER MICHELE R Role Project Manager

CE Amount 0

Const. Total 0

#	Fin. Sys	Maj
1	CMG	☑

#	Acct. Code
1	87800

Federal

Project 0000

Item 0000

Ready

Start | Novell GroupWise - Mailbox | AOL Mail (50) - Microsoft... | Applications - Microsoft I... | MetaFrame Presentation... | MUELLERM2 - MAP Pr... | 12:47PM

Mueller12 12:30:06 PM 8-20-2008

MDOT Financial Obligation System - MFOS [PROD]

File Find Actions Utilities Reports Mail Window Help

SEARCH GEN JOB REMARKS IN-BOX LOCKMFOS CLOSE

MFOS - Job Information [1]

Job 104007 Project Manager MUELLER MICHELE R MFOS Rollout FOS Rollout Latest Remark None

Job Type Trunkline
Major District Metro
Major County Wayne County
Major City Detroit
Urban Area Detroit Urbanized Area
Population Classification Pop over 200,000

HWY System
Fed Aid Other Federal-Aid Syst
Federal Indian Reservation Not on any Federal Res

Transportation System Highway
Federal Construction Improvement Type Safety/Traffic operat
Length (Miles) 0.000

Type of Highway
Functional System Major Collector

Fund Trans System
AERO HWY

FHWA Highway Information
National Highway System
FHWA Oversight

HWY
Disaster

Date
Design Plan Completion 08/02/2010
ROW Certification
Advertising
Approved Letting 8/1/2008
Actual Letting
Contract Award
Const Final Est Rcvd

Environmental Information
Classification Class II - CE
FMIS Classification Cat. Ex. Programmati
Categorical Exclusion Type C.8 - Fencing,Markgs&1
Projected ROD
ROD Date
FONSI Date
CE Date 1/12/2004

Ready

Start Novell GroupWise - Mailbox AOL Mail (50) - Microsoft... Applications - Microsoft I... MetaFrame Presentation... MDOT Financial Obliga... 12:50 PM

MFOS Screens

MFOS Screen Shots

Muellerm2 12:50:12 PM 8-20-2008

MDOT Financial Obligation System - MFOSUSR PROD

File Find Actions Utilities Reports Mail Window Help

LINEITEM SEARCH OPEN JOB REMARKS IN-BOX LOCKMFOS CLOSE

MFOS - General Job Information [ ]

Job 104007 Project 145289 Latest Remark None

Job Type Trunkline

Work Type Traffic Signals

Work Description Signal retiming CMAQ Grant #08130

Estimated Budget

Federal	$300,000.00
State	$0.00
Local/Other	$0.00
Total	$300,000.00

Location

CS	Route	BMP	EMP
82900	County Wide	0.000	0.000

Location Description

Up to 70 locations along trunklines in Wayne County

Job Id	Phase	Financial Status	Operational Status
104007		Initial Request	Programmed

Double-Click to view Phase Information

Job ID	Phase	Structure Number	Estimated Cost

Ready

Start | Novell GroupWise - Mailbox | AOL Mail (50) - Microsoft... | Applications - Microsoft I... | MetaFrame Presentation... | MDOT Financial Obliga... | 12:50PM

Job w/ 1 phase

MFOS Screen Shots

Mueller2 12:51:36 PM 6/20/2008

MDOT Financial Obligation System - MFOS Release 2.0.0.1

File Find Actions Utilities Reports Mail Window Help

LINEITEM SEARCH OPEN JOB REMARKS IN-BOX LOCKMFOS CLOSE

MFOS - General Job Information [ ]

Job 100738

Project 33168

Latest Remark None

Job Type Trunkline

Work Type Traffic Signals

Work Description MITS Equipment and Infrastructure for traffic monitoring and progression notification. C

Estimated Budget

Federal	$736,000.00
State	$184,000.00
Local/Other	$0.00
Total	$920,000.00

Location

CS	Route	BMP	EMP
82103	M-8	0.226	1.930
82104	M-8	0.000	0.372

Location Description

M-8 from I-75 to M-10, Wayne County

Job Id	Phase	Financial Status	Operational Status
100738	A	New Phase	Programmed
100738	C	Initial Obligation Approved	Active

Double-Click to view Phase Information

Job ID	Phase	Structure Number	Estimated Cost

Ready

Start | Novell GroupWise - Mailbox | AOL Mail (50) - Microsoft... | Applications - Microsoft I... | MetaFrame Presentation... | MDOT Financial Obliga... | 12:51 PM

Job w/ 2 phases

MFOS Screen Shots

Mueller2 12 30 19 PM 8.20.2008

MDOT Financial Obligation System - MFOSUSER PROD01

File Find Actions Utilities Reports Mail Window Help

SEARCH FINDPHASE GENPHASE OPENJOB LINEITEM FUNDDIST FUNDMIX MAINMIX MIXDETAIL FEDPROJ REMARKS IN-BOX CLOSE

MFOS - Phase Information [ ]

Job 104007 Phase Fed Proje Type of Phase Capital Phase

Major CS 82900 Fed Pro Rate 100.00% Fund Trans Sys Highway

Latest Remark Date None Fed Item PAB Rollout MFOS Rollout FOS Rollout

Phase Financial Status Initial Request

Federal Project Status

Funding Initiator MUELLER MICHELE R

Initiator's Division METRO REG-T&S-SAL/FRNG

Financial Contact

Chargeable Account Number

Authorized Date FHWA State Internal

Final Accounting Date

Location Description Up to 70 locations along trunklines in Wayne County

Work Description Signal retiming CMAQ Grant #08130

Route County Wide

No MAIN Source/MDOT State Source

Financial System	Major
CMG - CONGESTION MITIGATION - 100% FEDERAL	Yes

Fed Fund Source AC

Ready

Start Novell GroupWise - Mailbox AOL Mail (50) - Microsoft... Applications - Microsoft E... MetaFrame Presentation... MDOT Financial Obliga... 12:50PM

MFOS Screen Shots

Muellerm2 12 50 24 PM 6 20 2008

MDOT Financial Obligation System - MFOSUSER PROD01

File Find Actions Utilities Reports Mail Window Help

NEW SEARCH OPENPHASE OPENJOB FUNDDIST FUNDMIX MAINMIX MIX DETAIL FEDPROJ FIELDHELP IN-BOX LOCKMFOS EXIT CLOSE

MF05 - Phase Line Item [1]

Job 104007 Phase Fed Project Fed Item Fund Trans Sys Code Highway

Financial Status Initial Request

Tot. Phase Budget $300,000.00

Budget - Estimate $0.00

View Line Items By

Total Federal State Local/Other

Categories

Phase Line Item Type	Federally Participating	LIFS DM CD	Estimated Amount	Requested Amount	Authorization Amount	Cost to Date Amount	Date Init Obig Aprvd
Total Trans Items	Yes No	DB	$300,000.00	$300,000.00	$0.00	$0.00	
Totals:			$300,000.00	$300,000.00	$0.00	$0.00	

Ready

Start Novell GroupWise - Mailbox AOL Mail (50) - Microsoft... Applications - Microsoft I... MetaFrame Presentation... MDOT Financial Obliga... 12:50PM

MFOS Screen Shots

APPENDIX D – P/PMS ITS TASKS

Task Number Concept of Operations

Reporting Management Unit:	Designer/Design – Consultant Coordination
Task Start:	Onset thought of the Project
Task Finish:	Document to provide direction for the project
Date Last Modified:	August 2008

TASK DESCRIPTION:

The document should result from a stakeholder view of the operations of the system being developed. This document will present each of the multiple views of the system corresponding to the various stakeholders. These stakeholders include operators, users, owners, developers, maintenance, and management. This document can easily be reviewed by the stakeholders to get their agreement on the system description. It also provides the basis for user requirements.

The concept of operations process should include the following characteristics: Constraints, Inputs, Activities, and Enablers with the outcome of the outputs (concept of operations).

WORK STEPS:

1. Define project vision, goals and objectives
    a. Expand and elaborate on them to capture the multiple views
2. Explore project concepts
    a. Review the high level system architecture
3. Develop operational scenarios
    a. Describes how the system will be operated under various conditions.
    b. Scenarios should describe the activities from the viewpoint of each of the participants.
    c. May use flow diagrams, use cases etc.

4. Develop and document concept of operations
    a. Document should be a recording of findings and system characteristics for each of the multiple viewpoints of the various stakeholders.

    b. Document should include but not be limited to: vision, goals and objectives, operational philosophies, operational environment, support environment, operational system characteristics, system constraints and limitations, institutional issues, external interfaces, stakeholder functions, roles and responsibilities, and capabilities.

Task Number Final Communication Analysis

Reporting Management Unit:	Designer/Design – Consultant Coordination
Task Start:	Approval of the preliminary communication analysis or authorization to proceed
Task Finish:	Communication Analysis approval
Date Last Modified:	August 2008

TASK DESCRIPTION:

Once the communication alternatives are defined and conflicts identified the consultant shall provide that information to the Project Manager for review. A preliminary approval of the communications analysis will be given and the consultant will move forth to final communications determination.

If the selection for the communications is wireless the consultant shall move forth to determine based on field verification that the line of sight is clear and physically walk the path to make a clear determination if there will be any conflicts for radio communications. If there is conflict an alternative path must be pursued or an alternate communication option will need to be selected.

The bandwidth shall be confirmed to be of such nature to not derogate the system functionality.

If fiber design is selected the consultant shall design a large enough fiber bandwidth for future use and expansion. The Consultant shall also look at where the fiber should be accessible for future projects and/or future partnerships with other agencies etc.

WORK STEPS:

1. Meet with Project Manager to look at the communication options to make a preliminary approval.

2. Once preliminary approval is given the consultant shall determine if a field verification is necessary based on communication type selection.

3. If wireless communication is selected a field verification must be completed and it shall be all inclusive physically walked to insure open path.

4. If a blockage is discovered the Consultant shall determine a new wireless path or look at other communications options.

5. Confirmation of available bandwidth for all communications paths

6. If a fiber design is selected a determination of how much fiber and where the stubs should be put for future expansion or partnerships.

Task Number Final Conceptual Meeting

Reporting Management Unit:	Designer/Design – Consultant Coordination
Task Start:	Approval of the pre conceptual plan or authorization to proceed
Task Finish:	Distribution of completed preliminary plans to appropriate work centers, utility correspondence copies to project manager, soil boring request documentation, copy of document for ROW review.
Date Last Modified:	June 2008

TASK DESCRIPTION:

The plans should show existing device locations and communication paths for the current system where they exist. The plans shall show the beginning and ending limit of the project. The plans should show all known right of way, communication towers and other existing applicable field conditions.

The plans should not incorporate the conceptual concepts, evaluation of new device locations, new device locations shown on the drawings. A write up shall be included the shows the criteria utilized in the placement of the devices. This document shall provide information not limited to location selection, placement criteria is met, any potential issues with location, and if the device is replacing an existing location or if this is a new installation.

The work associated with this task will vary from project to project varying from a device upgrade project to a full blown communications and device installation.

WORK STEPS:

1. Take conceptual plans and transform those to proposed device locations on the map.

2. Input actual start date into appropriate data system.

3. If necessary, request additional field survey and/or arial mapping.
   a. If surveying is a consultant task, then obtain required survey information.
   b. If surveying is NOT a consultant task, then send a request and reason for additional survey information to the MDOT Project Manager.

4. Review device locations and determine the locations necessary to order soil borings. Submit plan sheet showing location and request for soil borings to MDOT Project Manager if the soil borings are to be done by MDOT. If the soil borings are to be done per the contract, schedule with the sub consultant to perform the soil borings.

5. Review the ROW information obtained and determine if additional ROW information is necessary for the project plans based on the proposed device locations. If additional information is necessary notify the MDOT Project Manager.

6. Prepare the utility request based on the type of project. The MDOT utility manager shall be involved in this process. The Consultant shall be responsible for transmitting the plans and cover sheet to the utilities and copy the Project manager and MDOT utility engineer(s) (based on TSC location for the project),

7. Determine with the Project Manager if any stakeholder meetings are necessary. If so the design consultant is responsible for setting up this meeting. The consultant shall set up the meeting and invite the stakeholders in coordination with the project manager. The correspondence shall be in writing and documented. MDOT will facilitate the meeting.

8. Submit final conceptual materials and prints to the MDOT Project Manager

Task Number Conduct Structure Foundation Investigation

Reporting Management Unit:	Project Manager or Construction and Technology – Geotechnical Unit
Task Start:	The receipt of a request for a foundation investigation, or written into consultant contract
Task Finish:	The distribution of the final Geotechnical Report to Project Manager, or receipt of final Geotechnical Report by Project Manger from consultant
Date Last Modified:	August 2008

TASK DESCRIPTION:

A foundation investigation is necessary for all new structures, and those existing structures which are to be modified or where the proposed substructure loads will increase. The investigation typically begins with the receipt of a request for a foundation investigation, which includes the designer's vision of the structure type, size, and location. In the case the project is under consultant contract, the need must be determined in the scoping process and written into the consultant contract. The foundation investigation shall be in accordance with MDOT control document "Geotechnical Investigation and Analysis Requirements for Structures" as found in the MDOT BBS.

Based on the information received, any existing soil borings are gathered and a determination is made as to the adequacy of the existing information and the need for additional soils information. Soil borings are normally required and access to private property must be obtained. Survey control points are required to identify the location of the borings. A boring pattern is established and utility clearances are obtained.

Once the pattern has been established, soil borings are performed with in-situ testing and laboratory analysis to determine the engineering behavior of the soils within the influence of the proposed substructure. The appropriate foundation treatment is selected, and a Geotechnical Report is sent to the Project Manager.

In the case of a consultant contract, the consultant often subcontracts an engineering firm to perform the above testing and distributes the results back to the Project Manager. This procedure covers a geotechnical investigation that must meet the requirements presented in the Michigan Design Manual. This investigation is necessary for all new structures and those existing structures that are to be modified or subjected to increased loads. The product of this task is a Geotechnical Report.

Work Steps:

1. Receive a request for a foundation investigation, or need is written into consultant contract. The foundation investigation shall be in accordance with MDOT control document "Geotechnical Investigation and Analysis Requirements for Structures" as found in the MDOT BBS.

2. Input actual start date into appropriate data system.

3. Research, review, and evaluate existing information such as existing borings, existing recommendations, etc., if available.

4. Obtain property access and request utility clearance.

5. Consultants must obtain all necessary permits, including an up-to-date permit from the MDOT Utilities Coordination and Permits Section, required to perform this survey on any public and/or private property.

   For protection of underground utilities and according to Public Act 53, 1974, the Consultant shall dial Miss Dig 1-800-482-7171 a minimum of three full working days, excluding Saturday, Sunday, and holidays, before beginning each excavation in areas where public utilities have not been previously located. Utility members will thus be routinely notified. This does not relieve the Consultant of the responsibility of notifying utility owners who may not be a part of the Miss Dig alert system.

   The Department's freeway lighting system, the IVHS, and other miscellaneous electrical systems are not a part of Miss Dig. Contractors working in the Metro District shall call:

   Freeway Lighting
   Freeway Lighting Contract Manager (810) 569-3993

   IVHS and Freeway Operations
   MITSC (Michigan Intelligent Transportation Systems Center) (313) 256-9800

   Lighting and Traffic
   Public Lighting Department (313) 224-0500

   Contractors working outside the Metro District should contact the maintenance representative at the MDOT District Office to have lighting systems staked.

6. Take soil borings, perform in-situ testing and collect soil samples.

7. Perform laboratory analyses.

8. Prepare the Geotechnical Report submittal package. Contact the MDOT Project Manager if you have questions regarding submittal requirements. The submittal package shall include the following:

    a. A cover letter stating conformance to MDOT's control document "Geotechnical Investigation and Analysis Requirements for Structures" as found in the MDOT BBS dated June, 1990, and updated in March 2004.
    b. List of outstanding questions and/or considerations.

9. Input actual finish date into appropriate data system.

10. Prepare and submit Geotechnical Report to the Project Manager.

11. Receive any items returned by the MDOT Project Manager as incomplete deficient.

12. Make necessary changes and resubmit the revised materials. Keep copies of the MDOT Project Manager's comments and the revised materials for the job record.

13. Receive the MDOT Submittal Evaluation form. Contact the MDOT Project Manager if one is not received within two weeks of submitting the Geotechnical Report.

Supplemental Information:

For more information, refer to the following:

Items to be purchased:
Michigan Design Manual

Items available through Construction and Technology Website:
MDOT's control document **"Geotechnical Investigation and Analysis Requirements for Structures"**, dated June, 1990, and updated in March 2004.

Task Number Compile Utility Information

Reporting Management Unit:	Project Manager
Task Start:	Completion of Pre-Conceptual Meeting
Task Finish:	Inclusion of Utility Information on Preliminary Plans
Date Last Modified:	August 2008

TASK DESCRIPTION:

The objective of this task is to gather information to determine the location of all utilities which could be impacted by the installation of new devices, communication paths, and any other type of work associated with the expansion of the system. The types of utilities include private and governmental utilities such as:

- Electrical,
- Water,
- Cable,
- Sewer,
- Gas,
- Communication, and
- County drains.

Once the scope has been verified and the Pre-Conceptual Meeting complete, the Project Manager distributes plans to the utilities (companies and governmental) requesting preliminary input and information. Information required from the utility includes location of utilities on a marked-up set of plans. A preliminary utility meeting is conducted, if necessary. Formal responses are received from all utilities by the Project Manager.

WORK STEPS:

1. Transmit Pre-Conceptual Meeting plans. to utilities.

2. Input actual start date into appropriate data system.

3. Hold/attend preliminary utility meeting, if beneficial.

4. Receive utility information.

5. Input actual finish date into appropriate data system.

6. Plot utility information on preliminary plans.

Task Number Power Design (Power Drop in Field)

Reporting Management Unit:	Designer/Design – Consultant Coordination
Task Start:	Upon completion of Final Concept Meeting
Task Finish:	Power drops are processed and approved with power company
Date Last Modified:	August 2008

TASK DESCRIPTION:

The consultant should review the final conceptual plan set to determine exact device locations. Once those locations are noted the consultant shall review the utility information to determine where the power sources are if needed for the subject equipment. If there is power the consultant shall insure the power supply is adequate for the existing and proposed loads. If there is no current power then the consultant shall take the necessary steps for a power drop installation.

WORK STEPS:

1. Review the final conceptual plan to determine the location of the existing and proposed devices.

2. Review the utilities to determine the current location of power supply for the devices.

3. Determine the existing and proposed power needs for those locations with existing power to insure they meet the requirements.

4. Gather information for those devices that do not have a current power supply to utilize and begin the process for a new power drop.

    a. Determine the location the power drop needs to be

    b. Determine the size of power necessary

    c. Contact the local agency for that subject area (may be many throughout a project) and request an address for that location. Even though it may be on a highway or in the ROW an address is needed for the power company. Typically, MDOT does not have to pay a fee for this address.

d. Complete the power company's form to request a power drop and submit to Power Company

e. Once Power Company has received form, contact them to schedule and on site visit of the location(s) with the utility company.

f. After the on site visit it should become an active project in the utility companies system.

g. Continue to follow up with utility company until such time as the service is installed.

Task Number Pre Conceptual Meeting

Reporting Management Unit:	Designer/Design – Consultant Coordination
Task Start:	Approval of the design scope of work or authorization to proceed
Task Finish:	Distribution of completed base plans to appropriate work centers
Date Last Modified:	May 2008

TASK DESCRIPTION:

The plans should show existing device locations and communication paths for the current system where they exist. The plans shall show the beginning and ending limit of the project. The plans should show all known right of way, communication towers and other existing applicable field conditions.

The work associated with the existing device locations and communications path will vary from project to project varying from a device upgrade project to a full blown communications and device installation.

WORK STEPS:

1. Review existing plans and other available information for device and communication path determination.

2. Input actual start date into appropriate data system.

3. If necessary, request additional field survey and/or arial mapping.
   a. If surveying is a consultant task, then obtain required survey information.
   b. If surveying is NOT a consultant task, then send a request and reason for additional survey information to the MDOT Project Manager.

4. Develop proposed job design based on the type of project. For device upgrade projects spot location plan sheets may be used. For any project that involves underground work the length of the project full set of plan sheets shall be developed.

5. Review the ROW information obtained and determine if additional ROW information is necessary for the project plans. If additional information is necessary notify the MDOT Project Manager.

6. Develop title sheet, note sheet, system overview sheet and plan sheets based on need for project.

7. Prepare a list of questions for the pre conceptual meeting of things that need to be determined, addressed, explored etc. Examples are: coordination with other agencies for communication needs/sharing, additional soils investigation, utility involvement, operations center needs and concern with existing devices in question. Explore future desires and links to coincide with the ITS Concept of Operations for Michigan.

8. Submit base plans and materials to the MDOT Project Manager

9. Make necessary changes and resubmit the revised materials. Keep copies of marked up plans and comments in the project files.

Task Number Preliminary Communication

Reporting Management Unit:	Designer/Design – Consultant Coordination
Task Start:	Approval of the final conceptual plan or authorization to proceed
Task Finish:	Communication plan alternatives
Date Last Modified:	August 2008

TASK DESCRIPTION:

The consultant should take the final conceptual plan and begin a communication layout for the devices to be integrated with the ITS system. This preliminary communication analysis should include and not be limited to communication alternatives. This should include all types of communication possible (wireless, fiber, cellular etc). The consultant shall layout a pros and cons list for the types of communications and how they fit with the subject system architecture.

Upon determination of the communications system the consultant shall look at potential conflicts with underground or above ground objects to make a determination of the impacts.

WORK STEPS:

1. Review the final conceptual plan to determine the possible methods of communications.

2. Provide analysis of communication options to show pros and cons of each option. This should include the approx costs associated and evaluation with long term architecture.

3. Review the communications options and review for potential conflicts both underground and above ground. Make a determination it the conflicts are overcome able or not. This will provide direction to move forth to final communications analysis and selection.

APPENDIX E – MDOT ARCHITECTURE CONFORMANCE AND MAINTENANCE DOCUMENT

Michigan Department
Of Transportation
2560 (07/09)

REGIONAL ITS ARCHITECTURE CONFORMANCE AND MAINTENANCE DOCUMENTATION FORM

Please complete the following questionnaire to document conformance or changes for the Regional ITS Architecture. Modifications will be made during the next architecture update.

AGENCY			
AGENCY CONTACT PERSON			
STREET ADDRESS	CITY	STATE	ZIP CODE
TELEPHONE	FAX	E-MAIL	

PROJECT INFORMATION

PROJECT NAME	PROJECT DESCRIPTION	
PROJECT SPONSOR (Agency providing funds)	ESTIMATED COST	DEPLOYMENT PLAN PROJECT NUMBER (if applicable)
MDOT OR LOCAL AGENCY PROJECT NUMBER (If applicable)	MDOT JOB NUMBER (If applicable)	MDOT CONTROL SECTION (If applicable)

REGION

CONFORMANCE TO REGIONAL ITS ARCHITECTURE

☐ This project conforms to the existing Regional ITS Architecture. No changes are required.

☐ This project does not conform to the existing Regional ITS Architecture. Requested changes are noted in the next section.

CHANGE INFORMATION

Please indicate the type of change:

☐ Level 1: Basic changes that does not affect the structure of the architecture. Examples include: Changes to the stakeholder or element name, element status, or data flow status.

☐ Level 2: Structural changes that impact only one agency. Examples include: Addition of a new market package or modifications to an existing market package that affects only your agency.

☐ Level 3: Structural changes that have the potential to impact multiple agencies. Examples include: Addition of a new market package or modifications to an existing market package that involves multiple agencies, incorporation of a new stakeholder into the architecture.

DESCRIBE REQUESTED CHANGE

IF THE PROPOSED CHANGE IMPACTS ANY MARKET PACKAGES, LIST THOSE MARKET PACKAGES (NOTE: If the proposed change involves creating or modifying a market package please attach a sketch of the new or modified market package.)

IF THE PROPOSED CHANGE AFFECTS ANY STAKEHOLDERS, LIST THOSE STAKEHOLDERS

IF COORDINATION WITH IMPACTED STAKEHOLDERS HAS OCCURRED, DESCRIBE THE RESULTS

☐ Approved by regional contact	REGIONAL CONTACT NAME	DATE
☐ Approved by ITS Program Office	ITS PROGRAM OFFICE NAME	DATE
☐ Forwarded to FHWA		DATE

Please submit change forms to:
MDOT – ITS Program Office
Attn: Collin Castle
P.O. Box 30049
8885 Ricks Road
Lansing, MI 48909

Transit-related projects should also be sent to:
MDOT – Bureau of Passenger Transportation and
Federal Transit Authority (FTA)

Process for Documenting Regional ITS Architecture Conformance and Maintenance

- ☐ The project manager evaluates the projects conformance to the Regional ITS Architecture.
- ☐ The project manager then completes the architecture conformance and maintenance documentation form and submits it to ITS Program Office.
- ☐ If the form is approved by the ITS Program Office, it is then submitted to the FHWA, the regional contact, the project manager and if applicable, the corresponding Metropolitan Planning Organization (MPO).
- ☐ If the form is rejected, the ITS Program Office coordinates with the project manager and the regional contact to then re-submit the new form for approval.
- ☐ To request a new form Contact your business area Forms Coordinator or Connie Bretes, MDOT FMO at (517) 335-2520.

APPENDIX F – STATE CONTRACT FOR "REQUEST FOR CELL"

Michigan Department
of Transportation
2151 (07/03)

CELLULAR TELEPHONE PROCUREMENT

Clear Form

GUIDELINES FOR APPROVAL

A. Cellular telephones can be used if it is in the interest of protecting life, welfafe or public property.

B. Cellular telephones may be approved where their use provides a significant employee productivity gain.

C. No state owned equipment related to cellular telephones shall be permanently installed in private vehicles.

D. MDOT's Technological Service Divison administers all cellular equipment and services.

JUSTIFICATION

Please state briefly how cellular technology will be used in relationship to the guidelines above.

CELLULAR USER(S) (Names)		JOB TITLE(S)	
BUREAU/DIVISON			REQUEST DATE
DIVISION/REGION APPROVAL (Signature)	DATE	BUREAU DIRECTOR APPROVAL (Signature)	DATE
CONTACT NAME		TELEPHONE NUMBER	
HOME CITY (AREA CODE)		DESCRIPTION ON AREA WHERE TELEPHONE IS USED ☐ STATEWIDE ☐ OTHER	

TYPE OF SERVICE REQUESTED

☐ NEW ☐ REPLACEMENT, TELEPHONE NUMBER: _____

TYPE OF EQUIPMENT REQUESTED

☐ PERMANENT INSTALLED MOBILE ☐ PORTABLE CELLULAR (Flip)

☐ STATE VEHICLE LICENSE NUMBER: _____

CUSTOM CALLING FEATURES

☐ CALL WAITING ☐ VOICE MAILBOX ☐ THREE-WAY CALLING ☐ CALL FORWARDING

TYPE OF ACCESSORIES REQUSTED

☐ EXTRA BATTERY ☐ CIGARETTE ADAPTER ☐ CARRYING CASE/BELT CLIP

☐ DESKTOP CHARGER ☐ OPTIONAL EXTERNAL ATENNA ☐ OTHER OPTIONS: _____

BILL TO ADDRESS	CITY	EXISTING CELLULAR CARRIER AND ACCOUNT NO.

AGY	AY				GRANT	PH	PROJ.	PH	AG1	AG2	AG3	AMOUNT

APPENDIX G– MAINTENANCE CHECKLIST FOR COMMUNICATION COMPONENTS

COMMUNICATIONS SYSTEM		
6 Month Preventative Maintenance *On a 6 month recurring schedule perform the following minimum preventative maintenance tasks at the communications shelters.*		
1	Check Cables, Harnesses, and Connectors	☐
2	Check Connections	☐
3	Clean or Change Air Filters	☐
4	Dust All Surfaces	☐
5	Sweep and Mop All Floors	☐
6	Check Desiccant and Change if Necessary	☐
7	Decompress Hydrator	☐
8	Exercise All Alarms	☐
9	Check Temperature Settings	☐
10	Inspect Interior and Exterior for Pest Infiltration	☐
11	Cut and Remove Weeds and Brush Within the Shelter Fence as Needed	☐
12	Check and Inspect Field Antenna	☐
13	Check FAA Strobe Lights on Towers. Replace as Necessary	☐
14	Provide and Renew Pest Deterrent System	☐
For Mechanical Equipment		
15	Perform Quarterly Inspections	☐
16	Replace Drive Belts Annually	☐
17	Check Belt, Pulley, and Shaft Alignment	☐
18	Lubricate Motor and Blower Bearings	☐
19	Identify and Report Unusual Vibrations or Wear Problems	☐
20	Check, Lubricate, and Clean Control Dampers	☐
21	Inspect Control Valves and Actuators	☐
22	Inspect Smoke Detectors and Freeze Protectors	☐
23	Test and Record Motor Rated and Actual Volts/Amps	☐
24	Brush and Inspect Cooling Coil Faces	☐
25	Check and Clean Evaporator Pan and Drain	☐
26	Replace Filters	☐
27	Check Economizer Operation and Metal Mesh Filters	☐
28	Check Operation of Electric Heater	☐
29	Observe Heating Elements of Electric Heater	☐
30	Observe Heating Elements for Correct Operation	☐
31	Test Safety Shut-off (High Temp)	☐
32	Confirm Thermostat or Temperature Controller Operation	☐
33	Clean Condenser Coil Twice per Year	☐

Annual Preventative Maintenance *On an annually recurring schedule, perform the following minimum preventative maintenance tasks at the communication shelters.*		
1	Measure the Voltage Standing Wave Radio (VSWR) of All Antenna Cables	☐
2	Check Received Light Levels at SONET Receivers and Adjust Attenuators Accordingly	☐
3	Perform Spectrum Analysis on Unlicensed Spread Spectrum Antennas, Looking for Interference, and Save Spectrum Captures with Maintenance Records for Future Reference	☐
4	Make all Adjustments, Corrections, Repairs, and Replacements Necessary to Optimize the Efficiency, Stability, and Reliability of the Communications Network	☐

APPENDIX H – CCTV

CCTV			
3 Month Preventative Maintenance *On a 3 month recurring schedule, perform the following minimum preventative maintenance tasks for each camera in the system.*		**Location**	
1	Check Communications Antenna/Dish Receive Signal Strength for Proper Fade Margin and Adjust Antenna Alignments if Under Proper Fade Margin	Field (Node/Hub)	☐
2	Check All Functions Such as Pan, Tilt, Zoom and Focus	Field (Node/Hub)	☐
3	Verify Video Quality	Field (Node/Hub)	☐
4	Verify Tilters Working Properly	Field (Node/Hub)	☐
5	Verify Camera Operation	Field (Node/Hub)	☐
6	Check All Functions Such as Pan, Tilt, Zoom and Focus	MITSC (For All Cameras Not Routing Through a Node or Hub)	☐
7	Verify Video Quality	MITSC (For All Cameras Not Routing Through a Node or Hub)	☐
8	Verify Tilters Working Properly	MITSC (For All Cameras Not Routing Through a Node or Hub)	☐
9	Verify Camera Operation	MITSC (For All Cameras Not Routing Through a Node or Hub)	☐
6 Month Preventative Maintenance *On a 6 month recurring schedule perform the following minimum preventative maintenance in addition to those described in the 3 month preventative maintenance schedule.*		**Location**	
10	Check Integrity of Cables and Connectors (Replace as Necessary)	Field	☐
11	Clean Interior and Exterior of Camera Housing and Lenses	Field	☐
12	Check Proper Functioning of Thermostat and Fan/Heater Operation	Field	☐
13	Apply Rainex, or Approved Equal, to Camera Window or Dome of the Housing Using the Manufacturer Recommended Procedure	Field	☐
14	Check That All Relays are Firmly Seated on the Control Board	Field	☐
15	Check Incoming Power for Proper Voltage	Field	☐
16	Visually Inspect Electrical Path to Ground	Field	☐
17	Visually Inspect the Camera Pole and Concrete Base for Signs of Abnormal Wear Such as Cracks, Significant Rust, Missing or Broken Anchor Bolts, or Other Signs of Weakness	Field	☐
18	Clean and Lubricate Pan and Tilt Mechanism	Field	☐
19	Check Mounting for Corrosion	Field	☐
20	Provide and Renew Pest Deterrent System	Field	☐
21	Check Intermediate Frequencies and If Not at 70 MHz +/- 3 MHz Then Determine if Deviation is Due to Transmission Frequency at the Pole in the Field or Tower Transmitter and Adjust Accordingly	Relay (Where Needed)	☐
22	Check and Adjust Video Again	Relay (Where Needed)	☐
23	Check 11 GHz IFDEMOD Level (1v pp)	Hub	☐
24	Check and Adjust Video Clamper Levels (1v pp)	Hub	☐
25	Set Tilters	Hub	☐
26	Adjust EA2010 to 1v pp on All Channels	Hub	☐
27	Check and Adjust Fiber Optic RX Levels	MITSC	☐
28	Make All Adjustments, Corrections, Repairs, and Replacements Necessary to Optimize the Efficiency, Stability, and Reliability of the Communications Network	N/A	☐

APPENDIX I – DMS LED SIGN SITE

DMS LED SIGN SITE		
3 Month Preventative Maintenance *On a 3 month recurring schedule, perform the following minimum preventative maintenance tasks.*		
1	Check Integrity of Cables and Connectors (Replace as Necessary)	☐
2	Check Cabinet Thermostat and Fan/Heater Operation	☐
3	Check Functioning of Accessories Such as Fans, Heaters and Lights	☐
4	Check Cabinet and Enclosure Doors for Proper Closure and Seal	☐
5	Check Cabinet Light	☐
6	Clean and Vacuum Inside of Cabinet	☐
7	Check Incoming Power for Proper Voltage	☐
8	Replace Failed LED Pixels	☐
9	Provide and Renew Pest Deterrent System	☐
10	Check That All Boards are Firmly Seated in Place on the Control Board	☐
11	Perform all “ON” and all “OFF” Tests	☐
12	Perform Row and Column Tests	☐
13	Check and Record Radio Signal Strength for All Wireless Modem Sites, and If Signal Is Low Perform Spectrum to Determine If Low Signal Strength Is Due to Interference or Alignment	☐
14	Perform Row and Column Tests	☐
15	Verify Proper 2070 Controller Communications with DMS	☐
6 Month Preventative Maintenance *On a 6 month recurring schedule perform the following minimum preventative maintenance in addition to those described in the 3 month preventative maintenance schedule.*		
16	Clean or Replace Vent Filters	☐
17	Change Cabinet Air Filter	☐
Annual Preventative Maintenance *On an annually recurring schedule perform the following minimum preventative maintenance tasks in addition to those in the 3 and 6 Month Preventative Maintenance Schedules.*		
18	Check Automatic Illumination Control by Covering Photo Cell	☐
19	Clean Photo Cell Aperture	☐
20	Clean Front Surface with Manufacturer Approved Detergent	☐
21	Check Fan Condition and Thermostat Settings	☐
22	Clean and Vacuum Enclosure	☐
23	Perform Row and Column Check Test	☐
24	Visually Inspect DMS Structure for Any Signs of Stress Including, but Not Limited to, Cracks, Chipped or Missing Galvanization, Loose or Missing Lock Nuts, Signs of Rust, and Cracks in the Underground Concrete Base	☐
25	Visually Inspect Electrical Paths to Ground	☐

APPENDIX J – DMS FLIP DISK SIGN SITE

DMS FLIP DISK SIGN SITE		
3 Month Preventative Maintenance *On a 3 month recurring schedule, perform the following minimum preventative maintenance tasks.*		
1	Check Integrity of Cables and Connectors (Replace as Necessary)	☐
2	Check Cabinet Thermostat and Fan/Heater Operation	☐
3	Check Functioning of Accessories Such as Fans, Heaters and Lights	☐
4	Check Cabinet and Enclosure Doors for Proper Closure and Seal	☐
5	Check Cabinet Light	☐
6	Clean and Vacuum Inside of Cabinet	☐
7	Check Incoming Power for Proper Voltage	☐
8	Fix failed or Misaligned Luminaries or Bulbs	☐
9	Replace Flip Disks as Necessary	☐
10	Check That All Boards are Firmly Seated in Place on the Control Board	☐
11	Perform All “ON” and All “OFF” Tests	☐
12	Perform Row and Column Tests	☐
13	Check and Record Radio Signal Strength For All Wireless Modem Sites, and If Signal Is Low Perform Spectrum to Determine If Low Signal Strength Is Due to Interference or Alignment	☐
14	Perform Row and Column Tests	☐
15	Verify Proper 2070 Controller Communications with DMS	☐
6 Month Preventative Maintenance *On a 6 month recurring schedule perform the following minimum preventative maintenance in addition to those described in the 3 month preventative maintenance schedule.*		
16	Check Reflectors for Adequate Reflectivity	☐
17	Clean or Replace Vent Filters	☐
18	Change Cabinet Air Filter	☐
Annual Preventative Maintenance *On an annually recurring schedule perform the following minimum preventative maintenance tasks in addition to those in the 3 and 6 Month Preventative Maintenance Schedules.*		
19	Check Automatic Illumination Control by Covering Photo Cell	☐
20	Clean Photo Cell Aperture	☐
21	Clean Front Surface with Manufacturer Approved Detergent	☐
22	Check Fan Condition and Thermostat Settings	☐
23	Clean and Vacuum Enclosure	☐
24	Perform Row and Column Check Test	☐
25	Visually Inspect DMS Structure for Any Signs of Stress Including, but Not Limited to, Cracks, Chipped or Missing Galvanization, Loose or Missing Lock Nuts, Signs of Rust, and Cracks in the Underground Concrete Base	☐
26	Visually Inspect Electrical Paths to Ground	☐

APPENDIX K – ESS (RWIS)

ENVIRONMENTAL SENSOR STATIONS (ESS)		
6 Month Preventative Maintenance *On a 6 month recurring schedule, perform the following minimum preventative maintenance tasks. (includes: cabinet and contents, sensor equipment, and all communication equipment)*		
1	Check Integrity of Cables and Connectors (Replace as Necessary)	☐
2	Check, Test, and Calibrate the Environmental Sensors	☐
3	Check In-Pavement Sensors for Damage	☐
4	Clean Visibility Sensors	☐
5	Clean CCTV Lens and Housing	☐
6	Check Cabinet Thermostat and Fan/ Heater Operation	☐
7	Clean and Vacuum Inside of Cabinet	☐
8	Check Cabinet Door for Proper Closure and Seal	☐
9	Visually Inspect Electrical Path to Ground	☐
10	Check and Record Radio Signal Strength for All Wireless Modem Sites – If Low, Perform Spectrum Analysis to Determine if Low Signal Strength is Due to Interference or Alignment	☐
11	Provide and Renew Pest Deterrent System	☐
12	Change Cabinet Air Filter	☐
13	Check Cabinet Light Bulb (Replace as Necessary)	☐

APPENDIX L – DETECTION STATION

Detection Station		
6 Month Preventative Maintenance *On a 6 month recurring schedule perform the following minimum preventative maintenance in addition to those described in the 3 month preventative maintenance schedule.*		
1	Check Integrity of Cables and Connectors (Replace as Necessary)	☐
2	Check Cabinet Thermostat and Fan/Heater Operation	☐
3	Clean and Vacuum Inside of Cabinet	☐
4	Change Cabinet Air Filters	☐
5	Check Cabinet and Enclosure Doors for Proper Closure and Seal	☐
6	Check Cabinet Light	☐
7	Visually Inspect Electrical Paths to Ground	☐
8	Provide and Renew Pest Deterrent System	☐
9	Check and Record Radio Signal Strength for All Wireless Modem Sites, and If Signal Is Low, Perform Spectrum to Determine If Low Signal Strength Is Due to Interference or Alignment	☐

APPENDIX M – OVERHEIGHT WARNING SYSTEM

OVERHEIGHT WARNING SYSTEM		
3 Month Preventative Maintenance *On a 3 month recurring schedule, perform the following minimum preventative maintenance tasks.*		
1	Check Integrity of Cables and Connectors (Replace as Necessary)	☐
2	Check Cabinet Thermostat and Fan/Heater Operation	☐
3	Check Cabinet and Enclosure Doors for Proper Closure and Seal	☐
4	Check Cabinet Light	☐
5	Clean and Vacuum Inside of Cabinet	☐
6	Clean the Receiver and Transmitter "Eyes" With a Soft Brush to Remove Airborne Contaminants	☐
7	Realign the Receiver and Transmitter "Eyes"	☐
8	Visually Inspect Electrical Path to Ground	☐
9	Test the System to Ensure That the Warning Is Activated When the Beam Is Broken	☐
10	Provide and Renew Pest Deterrent System	☐
6 Month Preventative Maintenance *On a 6 month recurring schedule perform the following minimum preventative maintenance in addition to those described in the 3 month preventative maintenance schedule.*		
11	Change Cabinet Air Filter	☐

APPENDIX N – SPEED WARNING SYSTEM

SPEED WARNING SYSTEM		
3 Month Preventative Maintenance *On a 3 month recurring schedule, perform the following minimum preventative maintenance tasks.*		
1	Check Integrity of Cables and Connectors (Replace as Necessary)	☐
2	Check Cabinet Thermostat and Fan/Heater Operation	☐
3	Check and Calibrate Speed Sensitivity Using the Test Submitted to, and Approved By, the Engineer	☐
4	Check Cabinet and Enclosure Doors for Proper Closure and Seal	☐
5	Change Cabinet Air Filter	☐
6	Clean and Vacuum Inside of Cabinet	☐
7	Visually Inspect Electrical Path to Ground	☐
8	Test the System to Ensure That the Warning Is Activated When Triggering Conditions Occur	☐
9	Provide and Renew Pest Deterrent System	☐
6 Month Preventative Maintenance *On a 6 month recurring schedule perform the following minimum preventative maintenance in addition to those described in the 3 month preventative maintenance schedule.*		
10	Check Integrity of Cables and Connectors (Replace as Necessary)	☐
11	Check Cabinet Thermostat and Fan/Heater Operation	☐
12	Check and Calibrate Speed Sensitivity Using the Test Submitted to, and Approved By, the Engineer.	☐
13	Clean and Vacuum Inside of Cabinet	☐
14	Change Cabinet Air Filters	☐
15	Check Cabinet and Enclosure Doors for Proper Closure and Seal	☐
16	Check Cabinet Light (Replace Bulb as Necessary)	☐
17	Visually Inspect Electrical Paths to Ground	☐
18	Test the System to Ensure That the Warning is Activated When Triggering Conditions Occur	☐
19	Provide and Renew Pest Deterrent System	☐

APPENDIX O – GLOSSARY OF TERMS

Glossary of Terms

2604 Form	A change request form in MPINS used to obtain authorization for such changes to a job such as adding or deleting phases, splitting a job, job costs, major work type, location, financial cost divisions, and major milestone dates. This form is usually submitted before creating a version of a job.
Ad Board	***State Administrative Board***: consists of the Governor, Lieutenant Governor, Secretary of State, Attorney General, State Treasurer, and the Superintendent of Public Instruction. They function as committees with general supervisory control over the administrative activities of all state departments and agencies. Some of these activities include approval of contracts and leases, oversight of the state capitol outlay process, and the settlement of small claims against the state.
ADMS	***Archived Data Management System***: an information management system that collects, processes, and documents or stores real-time IT data for use by a broad cross section of users. The information collected ranges from vehicle occupancy data to transit data.
ADPICS	***Advance Purchasing and Inventory Control System***: procurement management system designed to satisfy the complex and changing information and processing needs of government users. It was designed to specifically address the purchasing, receiving, inventory control and accounts payable requirements of the State of Michigan.
ATIS	***Advanced Traveler Information System***: tools that disseminate various components of traffic data – such as travel time, CCTV images, average speed, next bus arrival – through various means including web sites, kiosks, 511 systems, text messages/emails.
ATMS	***Advanced Traffic Management System***: a combination of technologies implemented to monitor, verify, and control traffic flow for a specific transportation network. These technologies can include, but is not limited to, CCTV cameras, DMS, roadside detectors, variable speed limits, or reversible lane systems.
BACKHAUL	Sending data in an out-of-way direction from a point over a network so that it can get to its final destination sooner or less expensive.
BODD	***Basis of Design Document***: a reference manual that captures processes and provides tools that guide the user through various steps of the design process for a specific agency. These tools include checklists, links to existing resources, and example products for reference.

BROADBAND	A wide band of frequencies able to transmit information concurrently across many different frequencies or channels within the band.
BTP	***Bureau of Transportation Planning***: responsible for "developing and implementing ongoing transportation planning processes which result in transportation system recommendations that support the basis for programming projects consistent with social, economic, and environmental goals."
C&T	***Construction and Technology***: it is responsible for development and distribution of construction specification, QC/QA, standards, and training. The division also includes the bridge maintenance and inspections programs as well as the bridge and pavement management systems. The divisions also interact with several universities around the State to conduct research and investigations.
CCTV	***Closed-Circuit Television***: video cameras used for surveillance in areas that transmit a signal to a specific place. The signal is not openly transmitted.
CIA	***Construction Influence Area***: The project and the area surrounding the project, as shown in the contract, that defines the limits of responsibility for traffic control.
CE	***Construction Engineering***: concerned with planning and management of the construction of structures (highways, bridges, airports, etc.)
CMAQ	***Congestion Mitigation and Air Quality Improvement program***: provides an additional funding source for State and local governments to support transportation projects and programs that could help reduce traffic congestion and improve air quality.
CMS	***Congestion Management System***: now Congestion Management Process (CMP) which is an eight step process for effectively addressing congestion challenges in metropolitan areas. It is required to be developed and implemented as part of the metropolitan planning process in TMAs.
Consultant Services	Consultant firm providing a public agency with many different services on an ITS project. Those services include: systems engineering document, concept of operations, and the planning-level layout of the ITS project [http://www.michigan.gov/mdot/0,1607,7-151-9625_21540.html].

Contractor Services	Center that administers MDOT's contracting processes. This would include prequalification, bid letting, contract awards, and payment [http://www.michigan.gov/mdot/0,1607,7-151-9625_21539.html].
ConOps	***Concept of Operations***: document describing characteristics of a proposed system from the user's viewpoint. It is based from a concept and is part of the systems engineering process.
COTS	***Commercial-off-the-shelf***: refers to software or hardware already developed and available for sale. They are usually used as an alternative for in-house developments as it will reduce the overall system costs.
CS	***Control Section***: number used to identify routes for record keeping, construction, maintenance, etc. The first two digits represent the county and the last three digits indentify number within that county. Any CS with 000 as the last three digits designates road/roads not owned by MDOT.
CSRT	***Central Selection Review Team***: group of individuals that review packages received from contractors/vendors. They consider all who submit, and will make a final selection of the vendor for each Tier I projects (between $25,000 and $100,000). They consider year-to-date workload, past performance, ratings, and market entry.
DMS	***Dynamic Message Sign***: stationary traffic control device that provides travelers with real-time, traffic-related variable messages. They are primarily used to warn, route, and manage traffic.
EPE	***Early Preliminary Engineering***: include the environmental analysis or feasibility study portion of a project and can sometimes include design components that assist in the evaluation of the alternatives.
ESS	***Environmental Sensor Stations***: fixed locations, usually placed alongside the roadway, used to measure/collect weather conditions (i.e. water level, temperature, wind, etc.). They are typically the field components of RWIS.
FAA	***Federal Aviation Administration***: an agency within the USDOT that regulates and oversees all aspects of aviation.
FCC	***Federal Communications Commission***: an agency within the US government and is in charge of regulating non-federal government use of radio, television broadcasting, and interstate telecommunications (wire, satellite, and cable). FCC also would regulate international communications if it originated from the US.

FCP	***Freeway Courtesy Patrol***: the assist motorist at trouble spots and during incidents along designated sections of roadway in Michigan. They are used to help reduce traffic congestion and improve highway safety.
FHWA	***Federal Highway Administration***: the federal agency responsible for collection and distribution of federal highway funds; oversees the maintenance and construction of federal-aid eligible roads, streets, highways, bridges, and non-motorized facilities.
FTA	***Federal Transit Administration***: an agency within the USDOT that provided financial and technical assistance to local public transit systems within the 50 states and DC, Puerto Rico, U.S. Virgin Islands, Guam, Northern Mariana Islands, and American Samoa. Public transit systems include buses, subways, light rail, commuter rail, ferry, commuter vanpools, and people movers.
GPA	***General Program Accounts***: small projects throughout the state that are not regionally significant. They include preventive maintenance, highway safety, preliminary engineering, enhancement, and rail/highway crossing improvements. The projects are listed individually in the STIP/TIP, but the total cost of all GPA projects is included in the financial tables.
IPO	***ITS Program Office*** is tasked with guiding and harmonizing the Statewide ITS program for MDOT. This includes reviewing ITS designs, reviewing ITS special provisions, coordinating the annual ITS call for projects and overall ITS program, and providing other ITS related assistance to the MDOT Regions.
ISP	***Information Service Provider***: an agency that collects specific data subsets and makes those available to other agencies. They are typically private sector information sources that provide the data for certain fees.
IT	***Information Technology***: it encompasses all aspects of computers and computer software, such as installing, storing, converting, protecting, transmitting and retrieving information.
ITS	***Intelligent Transportation System:*** broad range of wireless and wire line communications-based information and electronics technologies to improve transportation safety and mobility and enhance productivity.

LAN	***Local-area Network***: computer networks that connects workstations and personal computers. It is used to access data and devices anywhere on the LAN, such as printers and sending emails.
LED	***Light-emitting diode***: light emitted when an electrical current is applied in a forward direction of a device. It is widely used as indicator lights in flashlights or area lighting in homes. They provide the same amount of light but with a lower power supply compared with batteries.
LET	Act of advertising a project for construction. The LET date is typically the controlling deadline for the design of a project as these dates are often more difficult to adjust than other interim deadlines.
Line-of-sight	A field investigation to evaluate installation requirements between two wireless devices in order to achieve an acceptable communications link.
MAP	***MDOT Architecture Project***: the MDOT corporate database
MDIT	***Michigan Department of Information Technology***: a department that was created to oversee all information technology within Michigan state government
MDOT	***Michigan Department of Transportation***: a department created to uphold the State's trunkline system and provide transportation services, such as transit, rail, and air.
MFOS	***MAP Financial Obligation System***: second system used by MDOT in the planning, monitoring, scheduling, and funding of projects through construction. This system is primarily the fund obligation portion.
MITSC	***Michigan Intelligent Transportation Systems Center***: a traffic management center that collects and disseminates travel information across 300 miles of freeway in the Detroit Metropolitan area. MITSC collects data using CCTV, detectors, media, MSP, Freeway Courtesy Patrol, and other local agencies.
MP Numbers	***Mile Post Numbers***: points of reference along certain routes. Mile Post numbers provide a consistent approach for identifying locations of crashes, field devices, project limits, and other route specific data points.
MPINS	***MAP Project Information System***: functions as an interface for users to enter, maintain, and retrieve project data stored on the MAP database. It is the first of two systems that MDOT uses in the planning, monitoring, scheduling and funding of projects through construction.

MPO	***Metropolitan Planning Organization***: an organization that provides transportation plans and programs for the metropolitan area, core population of 50,000 and expected to grow. It is required to carry out transportation planning requirement of TEA-21 to be eligible for federal funds.
MSP	***Michigan State Police***: law enforcement that serves the entire state of Michigan.
MTF	***Michigan Transportation Fund***: a fund derived from state gas tax, vehicle registration, and other fees as authorized by Michigan Public Act 51 of 1951, used for the maintenance, preservation and improvement of county roads, city streets and state highways.
MVDS	***Microwave Vehicle Detection System***: detection system installed above ground on the side of a road to collect and report specified data on an ITS communication network to a TMC.
NCHRP	***National Cooperative Highway Research Programs***: administered by the National Research Council's Transportation Research Board that is a contracted research program committed to providing timely solutions to operational problems facing engineers and administrators.
Network	A work flow plan consisting of all tasks and constraints that must be completed to reach job objectives showing their planned sequence of accomplishment and logical relationships.
Network Generator	The computerized subsystem within P/PMS that generates job schedules. It uses certain information from the scoping checklist as well as a standard template of task's and constraints to compute durations and resource requirements for all tasks within a network.
NHS	**National Highway System**: a federally designated highway system connecting major population centers, international border crossings, and specific intermodal facilities to meet national defense requirements and serve interstate and interregional travel.
Occupancy	A measurement of the number vehicles per available lanes.
OEC	***Omissions/Error Check***: review of a plan set that occurs after the revisions to the draft final are complete. The omissions and error check is intended to be the final review before the plan set is prepared to LET.
P/PMS	***Program/Project Management System***: the MDOT Project Management software.

PBF	***Program Budget Forecaster***: web-based lifecycle management system that documents and manages the following life cycle of a project: Planning, Design, Construction, Operations, Maintenance, and finally, Replacement.
PE	***Preliminary Engineering***: the first stage of project development. It is the project-level planning and developing ways to implement solutions. Potential issues and obstacles are identified and a project concept is developed.
PM	***Project Manager***: leadership role in project development and is responsible for coordinating the tasks of participants on the project team and for keeping the job on schedule and within budget. They work with team members to set priorities with each person contributing to project development. They determine an estimate of the time and dollars needed for major project development function. The Project Manager coordinates to assure that the job remains consistent with the job concept statement and is within the budget.
PR Numbers	***Physical Routes Numbers***: a seven-digit number used to identify roads within MDOT GIS framework. Every public road is assigned a number. Any freeway or divided roads have separate numbers representing each directional roadway.
PTZ	***Pan-Tilt Zoom***: a functionality of a CCTV allowing for circular coverage in an area.
R*STARS	***Relational Standard Accounting and Reporting System***: financial management information system designed to meet accounting and reporting needs for large and small agencies.
Regional Architecture	A standardized approach for defining the long range regional vision for ITS. Development and maintenance of an ITS regional architecture are requirements by FHWA and FTA in order to utilize federal funds for the deployment of ITS.
RFP	***Request for Proposals***: an invitation to submit a proposal on a specific service that a contractor or vendor is willing to provide. The contractor or vendor is chosen through a bidding process.
Route Numbers	A number assigned to a route.
RWIS	***Road Weather Information System***: a collection of technologies that collect, transmit, models, and disseminates weather and road condition information. It typically uses ESS to collect the weather data.

SAFETEA-LU	***Safe, Accountable, Flexible, and Efficient Transportation Equity Act of 2005: A Legacy for Users***: the federal law signed August 10, 2005 authorizing highway, highway safety, transit, and other surface transportation programs for six years. The bill increases funding to create several new programs such as: Borders, Truck Parking Facilities, Freight Intermodal Distribution, Highway Safety, High Risk Rural Roads, and Safe Routes to School.
SE	***Systems Engineering***: field of engineering that focuses on how complex projects should be designed and managed. It deals with both the human and technical aspects of the projects (e.g. work processes, personnel, etc.).
SEMCOG	***Southeastern Michigan Council of Governments***: an MPO for the southeastern Michigan that help with regional planning for transportation, environment, community, economic development, and education. It encompasses seven counties, including: Livingston, Washtenaw, Monroe, Wayne, Macomb, Oakland, and St. Clair.
SI	***Systems Integrator***: This is similar to a Systems Manager except that the integrator is not involved in the planning and design stages. The systems integrator provides all of the personal services associated with the systems implementation except for the provision of equipment, electrical contracting and construction.
SLRP	***State Long-Range Plan***: a planning document required by TEA-21 with a 20-year planning horizon to provide statewide transportation policy and a guide for future transportation investment. It is revised every 3-5 years.
SM	***Systems Manager***: a contracting technique in which all project design and interface functions are performed by one consultant under engineering and design services contracts and all construction activities are performed by various construction contracts.
SMP	***Statewide Master Program***: the proposed plan of MDOT for developing and construction highway improvement jobs for a specific multi-year period of time (e.g., five-year program).
SP	***Special Provisions***: revisions or additions to the Standard and Supplemental Specifications which are applicable to an individual project.

SS	***MDOT Supplemental Specifications***: detailed specifications that add to or supersede the standard specifications.
STF	***State Trunkline Fund***: a portion of the gas and vehicle registration taxes administered by the MDOT for the maintenance, construction, and operation of the state Trunkline System, as established by Michigan Public Act 51 of 1951.
STIP	***State Transportation Improvement Plan***: a three year program of all road and transit transportation projects to be undertaken with federal funds, required by TEA-21 to be financially constrained, meet air quality conformity guidelines, and to be consistent with the policies of the State Long Range Plan.
TEA-21	***Transportation Equity Act for the 21st Century***: the federal law authorizing highway, highway safety, transit, and other surface transportation programs for six years. The legislation builds on the initiatives of ISTEA with new programs to improve safety, protect and enhance communities and the environment, and advance economic growth and competitiveness.
TIP	***Transportation Improvement Plan***: a three year document prepared by each MPO to provide a public listing of road and transit projects to be implemented within the designated three year period and demonstrate there are sufficient new resources available to start those projects.
TMA	***Transportation Management Areas***: urbanized areas with a population over 200,000 or any area where designation as a TMA has been requested.
TMC	***Traffic Management Center***: location or "hub" where ATMS information about transportation is collected and used to manage the network and to provide traveler information.
TMS	***Transportation Management System***: an integrated, automated decision tool, with six parts, each devoted to one of the mandated areas designated by federal requirements to easily provide and share pertinent data. The six parts include: bridge, congestion, intermodal, pavement, public transportation and safety.
TOC	***Traffic Operations Center***: gathers real time roadway conditions for decision making to improve traffic flow and reduce congestion along the roadway.

TMS	***Traffic Monitoring System***: process for collecting, analyzing, summarizing, and retention of highway and transit related traffic data.
USDOT	***United States Department of Transportation***: an agency established in the 1960's to provide a safe and efficient transportation system within the United States that meets the needs that are of national interest.
VID	***Video Image Detectors***: are out-of-pavement sensors that can detect presence of vehicles and can be used on freeways for occupancy data or with signalized intersections for control of the traffic signal.
VII	***Vehicle Infrastructure Integration***: initiative of research technology that directly links vehicles to their surroundings by vehicle-vehicle or vehicle-infrastructure communications to improve road safety.
Volume	The number vehicles that pass a specified location during a set period of time.

APPENDIX P – REFERENCES

References

DIT. (2008). *Department of Information Technology*. Retrieved 2008, from DIT: http://www.michigan.gov/dit/0,1607,7-139-30629---,00.html

FHWA/FTA. (2004). Peer-to-Peer Exchange on the Electronic STIP Amendment Project (E-STIP). *Peer Exchanges: Planning for a Better Tomorrow* , 14.

MDOT. (January 2000). *ADPICS: Data Entry Guide.*

MDOT and Wilbur Smith Associates. (November 2006). *State Long-Range Transportation Plan MPO/RPA Technical Reprot.*

MDOT. (2003, May). *BTP Invoice Processing.* Retrieved June 13, 2008, from MDOT Vendor/Consultant Services: http://www.michigan.gov/documents/MDO_BTP_Invoice_flowchart_123954_7.pdf

MDOT. (2008). *Contract Flowchart.* Retrieved June 13, 2008, from MDOT Vendor/Consultant Services: www.michigan.gov/documents/MDOT_contract_lowchart_123947_7.pdf

MDOT. (February 2008). *Five-Year Transportation Program 2008-2012.*

MDOT. (2004). *MDOT ITS Strategic Plan.* MDOT.

MDOT. (n.d.). *MDOT Road Design Manual - Chapter 11.* Retrieved 2008, from http://mdotwas1.mdot.state.mi.us/public/design/files/englishroadmanual/erdm11.pdf

MDOT. (2008). *MDOT Statewide Transportation Improvement Program.* Retrieved June 13, 2008, from MDOT Strategic Planning: http://www.michigan.gov/documents/mdot/MDOT_STIP_FY08-11_Report_211424_7.pdf

MDOT. (2008). *MDOT Traffic Monitoring Information System (TMIS)*. Retrieved September 2008, from MDOT: http://apps.michigan.gov/tmis/Definitions.aspx

MDOT. (2008). *Michigan Department of Transportation*. Retrieved 2008, from MDOT: http://www.michigan.gov/mdot

MDOT. (1996). *Michigan Office of the Auditor General.* Retrieved September 2008, from Michigan: http://audgen.michigan.gov/digests/94_95/5915094.htm

MDOT. (2008). *Overview of BTP Contract Development Process.* Retrieved June 13, 2008, from MDOT Vendor/Consultant Services: http://www.michigan.gov/documents/MDOT_CONTRACTDEVELOPMENTPROCESSa_123951_7.pdf

MDOT. (2005). *Program/Project Management System (PPMS) Combined Preconstruction Process Documentation Manual.* MDOT.

MDOT. (2007). *State of Michigan Financial Management Guide Part II - Accounting and Financial Reporting.* MDOT.

MDOT Statewide Transportation Planning Division, Strategic Systems Operations & Maintenance Section. (1998). *Michigan Department of Transportation Management System Support Tool.* MDOT.

MDOT. (n.d.). *Transportation Management System .* Retrieved 07 02, 2008, from Transportation Management System User Manual: http://mdotwas1.mdot.state.mi.us/public/tmsmanual

Michigan Office of State Budget. (n.d.). *R*STARS Data Entry Guide.* Retrieved 2008, from R*STARS: http://www.michigan.gov/budget/0,1607,7-157-13404_27707-71028--,00.html

Michigan Office of the Auditor General. (2007). *Performance Audit of the Michigan Department of Transportation Architecture Project, User Application and Registration Systm, BID Express System, and Construction Reladted Systems.* MDOT.

Mixon Hill. (2007). *VII Data Use Analysis and Processing Concept of Operations.* Mixon Hill of Michigan.

Robbins-Gioia. (May 15, 2008). *P/PMS Task Manual (Preconstruction Process Documentation Manual).* Alexandria, VA.

SEMCOG. (2008). *SEMCOG*. Retrieved September 2008, from about SEMCOG: http://www.semcog.org/homepage_alt.aspx

USDOT. (2007, February). *FHWA CMAQ and SAFETEA-LU*. Retrieved September 2008, from FHWA: http://www.fhwa.dot.gov/environment/cmaqpgs/safetealu/

USDOT. (2008). *FHWA/CMP*. Retrieved September 2008, from Congestion Management Process: http://www.fhwa.dot.gov/resourcecenter/teams/planning/cms.cfm

USDOT. (n.d.). *FHWA/ESS.* Retrieved September 2008, from BEst Practices for Road Weather Management: http://ops.fhwa.dot.gov/Weather/best_practices/EnvironmentalSensors.pdf

USDOT. (2002, July). *FHWA/RWIS.* Retrieved September 2008, from Standards for Road Weather Information Systems (RWIS): http://ops.fhwa.dot.gov/weather/publications/rwis_brochure.pdf

Vandervalk-Ostrander, A., Guerre, J., & Harrison, F. (2003). *Review of Data Integration Practices and their Applications to Transportation Asset Management.* U.S. DOT Federal Highway Administration.