Michigan Department
Of Transportation
5100B (07/07)

CHECKLIST TO DESIGNATE AREAS OF EVALAUTION FOR REQUESTS FOR PROPOSAL (RFP)

Exhibit B

MDOT PROJECT MANAGER	JOB NUMBER (JN)	CONTROL SECTION (CS)
Steven Katenhus	Various	Various

DESCRIPTION
Bridge Scoping Services

MDOT PROJECT MANAGER: Check all items to be included in RFP

WHITE = REQUIRED
GRAY SHADING = OPTIONAL

Check the appropriate Tier in the box below

CONSULTANT: Provide only checked items below in proposal

☐ **TIER 1 ($25,000-$99,999)**	☑ **TIER II ($100,000-$250,000)**	☐ **TIER III (>$250,000)**	
☐	☑	☐	Understanding of Service
☐	☐	☐	*Innovations*
☐	☐	☐	*Safety Program*
N/A	☐	☐	Organizational Chart
☐	☑	☐	Qualifications of Team
☐	☑	☐	Past Performance
Not required As part of Official RFP	Not required As part of Official RFP	☐	Quality Assurance/Quality Control
☐	☑	☐	**Location:** The percentage of work performed in Michigan will be used for all selections unless the project is for on-site inspection or survey activities, then location should be scored using the distance from the consultant office to the on-site inspection or survey activity.
N/A	N/A	☐	Presentation
N/A	N/A	☐	Technical Proposal (if Presentation is required)
3 pages (MDOT Forms not counted) **(No Resumes)**	7 pages (MDOT Forms not counted)	19 pages (MDOT Forms not counted)	Total maximum pages for RFP **not including key personnel resumes**

Michigan Department
of Transportation
5100H (03/10)

REQUEST FOR PROPOSAL

Clear Form

The Michigan Department of Transportation (MDOT) is seeking professional services for the project contained in the attached scope of services.

If your firm is interested in providing services, please indicate your interest by submitting a Proposal, Proposal/Bid Sheet or Bid Sheet as indicated below. The documents must be submitted in accordance with the latest "Consultant/Vendor Selection Guidelines for Service Contracts" and "Guideline for Completing a Low Bid Sheet(s)", if a low bid is involved as part of the selection process. **Referenced Guidelines are available on MDOT's website under Doing Business > Vendor/Consultant Services >Vendor/Consultant Selections.**

RFP SPECIFIC INFORMATION

☑ BUREAU OF HIGHWAYS ☐ BUREAU OF TRANSPORTATION PLANNING ** ☐ OTHER

THE SERVICE WAS POSTED ON THE ANTICIPATED QUARTERLY REQUESTS FOR PROPOSALS

☑ NO ☐ YES DATED _____ THROUGH _____

☑ **Prequalified Services** – See page 1 of the attached Scope of Services for required Prequalification Classifications.

☐ **Non-Prequalified Services** - If selected, the vendor must make sure that current financial information, including labor rates, overhead computations, and financial statements, if overhead is not audited, is on file with MDOT's Office of Commission Audits. This information must be on file for the prime vendor and all sub vendors so that the contract will not be delayed. (**Form 5100J Required with Proposal**)

☑ **Qualifications Based Selection** – Use Consultant/Vendor Selection Guidelines

For all Qualifications Based Selections, the section team will review the information submitted and will select the firm considered most qualified to perform the services based on the proposals. The selected vendor will be contacted to confirm capacity. Upon confirmation, that firm will be asked to prepare a priced proposal. Negotiations will be conducted with the firm selected.

****For RFP's that originate in Bureau of Transportation Planning only**, a priced proposal must be submitted at the same time as, but separate from, the proposal. Submit directly to the Contract Administrator/Selection Specialist, Bureau of Transportation Planning **(see address list, page 2)**. The priced proposal must be submitted in a sealed envelope, clearly marked **"PRICE PROPOSAL."** The vendor's name and return address MUST be on the front of the envelope. The priced proposal will only be opened for the highest scoring proposal. Unopened priced proposals will be returned to the unselected vendor(s). Failure to comply with this procedure may result in your priced proposal being opened erroneously by the mail room.

For a cost plus fixed fee contract, the selected vendor must have a cost accounting system to support a cost plus fixed fee contract. This type of system has a job-order cost accounting system for the recording and accumulation of costs incurred under its contracts. Each project is assigned a job number so that costs may be segregated and accumulated in the vendor's job-order accounting system.

☐ **Qualifications Review / Low Bid** - Use Consultant/Vendor Selection Guidelines. See Bid Sheet Instructions for additional information.

For Qualification Review/Low Bid selections, the selection team will review the proposals submitted and post the date of the bid opening on the MDOT website. The notification will be posted at least two business days prior to the bid opening. Only bids from vendors that meet proposal requirements will be opened. The vendor with the lowest bid will be selected. The selected vendor may be contacted to confirm capacity.

☐ **Best Value** - Use Consultant/Vendor Selection Guidelines. See Bid Sheet Instructions below for additional information. The bid amount is a component of the total proposal score, not the determining factor of the selection.

☐ **Low Bid** (no qualifications review required - no proposal required.) See Bid Sheet Instructions below for additional instructions.

BID SHEET INSTRUCTIONS

A bid sheet(s) must be submitted in accordance with the "Guideline for Completing a Low Bid Sheet(s)" (available on MDOT's website). The Bid Sheet(s) is located at the end of the Scope of Services. Submit bid sheet(s) separate from the proposal, to the address indicated below. The bid sheet(s) must be submitted in a sealed manila envelope, clearly marked **"SEALED BID."** The vendor's name and return address MUST be on the front of the envelope. Failure to comply with this procedure may result in your bid being opened erroneously by the mail room and the bid being rejected from consideration.

PROPOSAL SUBMITTAL INFORMATION

REQUIRED NUMBER OF COPIES FOR PROJECT MANAGER	PROPOSAL/BID DUE DATE	TIME DUE
3	7/14/10	3:00 p.m.

PROPOSAL AND BID SHEET MAILING ADDRESSES

Mail the multiple proposal bundle to the MDOT Project Manager or Other indicated below.

☑ MDOT Project Manager ☐ MDOT Other

Steven Katenhus, P.E.
Michigan Department of Transportation
55 East Morley Drive
Saginaw, Michigan 48601

Mail one additional stapled copy of the proposal to the Lansing Office indicated below.

	Lansing Regular Mail	OR	Lansing Overnight Mail
☑	Secretary, Contract Services Div - B470 Michigan Department of Transportation PO Box 30050 Lansing, MI 48909		Secretary, Contract Services Div - B470 Michigan Department of Transportation 425 W. Ottawa Lansing, MI 48933
☐	Contract Administrator/Selection Specialist Bureau of Transportation Planning B470 Michigan Department of Transportation PO Box 30050 Lansing, MI 48909		Contract Administrator/Selection Specialist Bureau of Transportation Planning B470 Michigan Department of Transportation 425 W. Ottawa Lansing, MI 48933

GENERAL INFORMATION

Any questions relative to the scope of services must be submitted by e-mail to the MDOT Project Manager. Questions must be received by the Project Manager at least four (4) working days prior to the due date and time specified above. All questions and answers will be placed on the MDOT website as soon as possible after receipt of the questions, and at least three (3) days prior to the RFP due date deadline. The names of vendors submitting questions will not be disclosed.

MDOT is an equal opportunity employer and MDOT DBE firms are encouraged to apply. The participating DBE firm, as currently certified by MDOT's Office of Equal Opportunity, shall be listed in the Proposal

The following two American Recovery and Reinvestment Act of 2009 (ARRA) notifications, **ARRA MONTHLY EMPLOYMENT REPORTS** and **REQUIRED CONTRACT PROVISIONS TO IMPLEMENT AMERICAN RECOVERY AND REINVESTMENT ACT (ARRA) SECTIONS 902 AND 1515**, are attached to this Request For Proposal for your understanding. These two notifications are only applicable for those projects/contracts funded with ARRA funds and will be included in contract Exhibits.

MDOT FORMS REQUIRED AS PART OF PROPOSAL SUBMISSION

5100D – Request for Proposal Cover Sheet
5100G – Certification of Availability of Key Personnel
5100I – Conflict of Interest Statement
5100J - Consultant Data and Signature Sheet (Required only for Non-Prequalified Work)

(These forms are not included in the proposal maximum page count.)

Notification
ARRA MONTHLY EMPLOYMENT REPORTS
Note: This Notification is only applicable for those projects/contracts funded with ARRA funds. If you have questions, please contact MDOT Contract Services Division at (517) 335-0071.

The American Recovery and Reinvestment Act of 2009 (ARRA), requires states receiving stimulus funds for highway projects to provide monthly reports to the Federal Highway Administration (FHWA) regarding the number of employees of the prime contractors, all-tier subcontractors and consultants on ARRA funded projects.

The cost for complying with this Notification must be borne by the prime contractor, and all-tiers of subcontractors and consultants, as part of their overhead and is deemed to be included in the payments made under this contract.

Within 10 days after the end of each month in which work is performed on this contract, all prime contractors and consultants must provide the Engineer a monthly report on MERS at https://sso.state.mi.us/ providing employment information on each ARRA project, which will include, for work performed in that preceding month:

- The total number of employees who performed work on this contract.
- The total number of hours worked by employees who performed work on this contract.
- The total wages of employees who performed work on this contract.

Prime Consultants are responsible for reporting on all subconsultants' employment information in MERS, as the sub consultants will not have access to do so.

In addition, the prime contractor must provide a total payment amount made to any subcontractor who is a certified DBE in that preceding month.

This Notification shall be included as a part of each subcontract executed by the prime contractor, and all-tiers of subcontractors and consultants.

If necessary to conform to guidance provided by FHWA concerning the ARRA reporting requirements, the prime contractor, and all-tiers of subcontractors and consultants will revise their reporting as directed by the Engineer.

Failure to comply with the reporting requirements under ARRA would jeopardize the Department's continued receipt of ARRA funding.

Accordingly, if a contractor or any-tier of subcontractor or consultant fails to comply with this Notification, the Department may withhold contract payments until compliance is achieved. If the Department is compelled to incur costs because of such a breach, the amount of those costs may be deducted from payments otherwise to be made under this contract. Additional sanctions may include reduction or elimination of prequalification ratings and removal of bidding privileges.

NOTIFICATION
REQUIRED CONTRACT PROVISIONS TO IMPLEMENT AMERICAN RECOVERY AND REINVESTMENT ACT (ARRA) SECTIONS 902 AND 1515

Note: This notification is only applicable for those projects/contracts funded with ARRA funds. If you have questions, please contact MDOT Contract Services Division at (517) 335-0071.

In accordance with requirements under section 902 of the American Recovery and Reinvestment Act of 2009 (ARRA), the following language is made a part of this contract and is to be made a part of all tier subcontracts or consultant contracts:

The U.S. Comptroller General and his representatives have the authority:

(1) To examine any records of the contractor or any of its subcontractors, or any State or local agency administering such contract, that directly pertain to, and involve transactions relating to, the contract or subcontract; and

(2) To interview any officer or employee of the contractor or any of its subcontractors, or of any State or local government agency administering the contract, regarding such transactions.

The Comptroller General and his representatives have the authority and rights provided under Section 902 of the ARRA with respect to this contract. As provided in section 902, nothing in section 902 shall be interpreted to limit or restrict in any way any existing authority of the Comptroller General.

In accordance with the requirements of section 1515(a) of the ARRA any representatives of the Inspector General have the authority:

(1) To examine any records of the contractor or grantee, any of its subcontractors or sub-grantees, or any State or local agency administering such contract, that pertain to, and involve transactions relating to the contract, subcontract, grant, or sub-grant; and

(2) To interview any officer or employee of the contractor, grantee, sub-grantee or agency regarding such transactions.

Nothing set forth in section 1515 of the ARRA shall be interpreted to limit or restrict in any way any existing authority of an inspector general.

MICHIGAN DEPARTMENT OF TRANSPORTATION

SCOPE OF SERVICE
FOR
DESIGN SERVICES
2015 BRIDGE SCOPING

CONTROL SECTION: Various

JOB NUMBER: Various

LOCATION: Various locations throughout the BAY REGION - see the Attachment A for specific bridge numbers and locations.

PROJECT DESCRIPTION: To evaluate various repair alternatives for a prescribed set of bridges and recommend the most appropriate rehabilitation or treatment based on current conditions, remaining structure life and sound engineering judgment.

Project includes visiting the site for each structure and maintaining traffic to evaluate the bridges.

ANTICIPATED SERVICE START DATE: September 15, 2010

ANTICIPATED SERVICE COMPLETION DATE: February 18, 2011

PRIMARY PREQUALIFICATION CLASSIFICATION:
Bridge Project Scoping

SECONDARY PREQUALIFICATION CLASSIFICATION:
Maintaining Traffic Plans and Provisions

DBE REQUIREMENT: None

MDOT PROJECT MANAGER (MDOT PM):
Steve Katenhus, P.E.
Bay Region Bridge Management Engineer
55 East Morley Drive
Saginaw, Michigan 48601
PM Office: (989) 754-0878
Fax: (989) 754-8122
PM E-mail: katenhuss@michigan.gov

GENERAL INFORMATION:

Each year a number of bridges are selected for repairs based on many factors. Each of these bridges must have a detailed scope of work and an estimate developed prior to submitting for approval and design.

The deliverables will be the Scoping Reports for each bridge. The information contained in the Scoping Reports will be used by the Bridge Design Support Area to prepare rehabilitation plans. Therefore, in general terms, the content of the reports will need to be sufficient to adequately convey the general physical condition of each structure and the specific areas in need of repair. Current design standards and minimum requirement criteria must be taken into account when recommending repairs.

The bridges included are located in various locations within the Bay Region. The work is proposed to be constructed in various years between 2013 and 2016. The determination of the scope of work for these bridges must take into account any road projects in the area. This information will be provided by MDOT.

Coordination of lane closures and traffic control will be with the MDOT Project Manager and the local MDOT TSC. Lane closures will not be permitted during special local events/holidays without prior approval.

DURATION AND SCHEDULE:

The duration of the project has been established using an average time per bridge determined from previous experience. If the CONSULTANT cannot meet these deadlines, the reason for the required extra time must be detailed in the priced proposal.

A. PROJECT DATES

Following is a schedule of dates for this project:

1. Priced Proposal Submission: **August 4, 2010**
2. Anticipated NTP: **September 15, 2010**
3. Project Initiation Meeting: **September 16, 2010**
4. Draft Report Submission: **January 14, 2011**
5. Final Report Submission: **February 18, 2011**

B. PROJECT SCHEDULE

By submittal of priced proposal, the CONSULTANT is verifying that they can meet schedule identified in this scope of work. The priced proposal must include a bridge by bridge schedule showing the required milestones. The CONSULTANT must notify the MDOT PM 48 hours prior to the site review date of any changes to this schedule.

C. MEETINGS

1. Project Initiation Meeting

A mandatory Project Kick-off Meeting will be held with the CONSULTANT prior to the start of the site review work. The CONSULTANT PM will be required to attend the meeting and it will be held at MDOT's Region Office unless an alternative site is

mutually agreed to. The CONSULTANT will be responsible for documentation and distribution of all meeting minutes.

2. 2. Sample Report Review and Progress meeting

The MDOT PM will decide if a Sample Report Review and Progress Meeting will be held with the CONSULTANT at the Region Office during the report preparation period, prior to the draft report submittal. Typically this is done if this is the first Bridge Scoping project the CONSULTANT has done for the Bay Region, or if the MDOT PM has no prior experience with the CONSULTANT. The MDOT PM and the CONSULTANT PM (report author) will be required to attend. A sample draft report (for one bridge) must be presented to the MDOT PM at the meeting. This report will be used to compare against the requirements of the Scope of Services. Questions on the report preparation may be asked at this time as well. The CONSULTANT is encouraged to ask questions throughout the duration of the project.

GENERAL DESCRIPTION OF THE WORK:

The work for each bridge is broken down into three main components: **A)** Site Review **B)** Engineering Analysis of Findings and, **C)** Report Preparation.

A. SITE REVIEW

1. General

Each bridge and environs must be visited by the CONSULTANT PM. The purpose of this visit is to locate all areas of deterioration, determine feasible repair options, and to ascertain quantities. Where necessary, high-reach equipment or an under bridge inspection crane must be used to get close enough to evaluate the structural components (See Section **EQUIPMENT AND SAFETY**, below).

The information collected in the field must be sufficient to determine quantities and locations of repairs and improvements. This information must be detailed in the field notes and/or sketches and are to be included in the report.

a. During the site review of the bridge, the following will be done, at a minimum:

(1) Sound all concrete elements (deck, superstructure, substructure, etc.) for delaminations and unsound areas. All delaminated areas are to be marked with chalk, crayon, or kiel, that will be evident in the photographs. Paint may be used on deck surface and deck soffit with MDOT PM approval. **The use of paint on substructure units is prohibited**. All delamination surveys are part of the site review work (not part of testing). Sketches of the deck and substructure units mapping the areas of delamination and cracking are to be included in the appendix of the scoping report. Percent of total surface area delaminations shall be calculated and shown on the sketches.

The underside of the deck must be inspected for wet areas, efflorescence, transverse cracking, longitudinal cracking, map cracking, delaminations, spalling, rust along beam edges, or any other evidence of deterioration. The type of cracking and severity must be described in detail in the report. Note areas of previous repairs, or where false decking is in place. Pictures of the area must be taken and a written description of the deterioration and location must be documented for inclusion into the report.

Visually inspect all substructure units for signs of settlement, lateral movement, cracking, spalling, exposed reinforcement and material defects. Note the condition of the backwalls, and check the bridge seat for undermining at bearing locations. For pier caps, check for flexural cracks and shear cracks.

(2) Note the type and condition of the bridge railing. Does the railing meet current standards? Is a thrie beam retrofit necessary, or a railing replacement? If pedestrian fencing is present, note its condition. Guardrail on the approaches should also be evaluated. Note the condition of brush blocks, raised shoulders and sidewalks, and how these elements transition from the approaches.

(3) For reinforced concrete and prestressed concrete superstructures, visually inspect for shear or flexure cracking, exposed or broken prestressing strands, crushing of beam end in bearing areas, discoloration of concrete caused by corroding mild reinforcement or prestressing strands, high load hit damage and signs of previous repairs. Observe live loads crossing structure and note excessive deflections or working cracks. Inspect the concrete diaphragms for spalling or diagonal cracking from structure movement or excessive deflection, and any other concrete defects. Note the use of temporary supports, or if they may be needed for the structure to remain in service until proposed rehabilitation.

(4) For steel beam superstructures visually inspect for areas of section loss, heavily rusted areas or any web buckling due to excessive section loss. Note any areas that are prone to trapping drainage or debris. Note the condition of the paint system. Thickness readings shall be taken at each beam end that exhibits section loss using an ultra-sonic thickness gage. Preparation shall include removing all dirt, debris, and rust scale from the ends of each of the steel beams under the joints so that the steel can be inspected for section loss. Thickness readings on the web and the bottom flange are to be taken at

the thinnest locations within 12 inches of the end of the beam. Do not remove paint on beam ends that exhibit no section loss. Mark the sheet as "No visible loss."

These thickness readings will be compared with the original thickness and the percentages of section loss will be calculated. This data will be tabulated in a specific format (as shown in Attachment No. 1, Steel beam section loss detail sheets) and sketches will be prepared of major components, showing the location of the deteriorated areas. Specifically, if beam end repairs are necessary, show the locations of beam ends in need of repair on the existing erection diagram from the as-built plans. This information will be presented in the Appendix of the scoping report. These documents are used by Lansing Bridge Design to prepare rehabilitation plans, and C & T Bridge Operations Unit to perform load rating analyses if requested.

Visually inspect the steel superstructure for any areas that may exhibit out of plane bending or distortion such as web to diaphragm or cross frame connections, lateral gusset plates to web connections, or connections of any other secondary members to beams. Note the existence of any fatigue prone details, or any welding in the tension zones that are transverse to the plane of stress. Inspect any pin and hanger assemblies for proper operation. Does the pin and hanger meet current standards? Note the condition of pin plates and if the ends are touching due to pin and hanger closure.

(5) In other areas of heavy flaking rust, the CONSULTANT will clean as necessary to measure for any section loss. Thickness readings will be taken at the thinnest locations and recorded.

(6) Note the condition of all bearing devices. For steel bearings such as rocker bearings or pedestal bearings, inspect for pack rust, rocker alignment, section loss and paint condition. For elastomeric bearings, check for excessive bulging of the sides (greater than 15% of bearing thickness), shear deformation due to thermal movement, splitting and tearing, and discoloration from exposure to light.

(7) The vertical clearance of the bridge must be field verified and noted in the executive summary and stated in the report. A picture of any vertical clearance sign attached to the bridge must be taken. See the MDOT Bridge Design Manual, Volume 5, Section 7.01.08 for minimum vertical clearance requirements. For structures not meeting minimum vertical

underclearance criteria, raising the structure to meet current standards must be considered in selecting the repair option. Any option including a deck replacement, superstructure replacement or bridge replacement must meet the minimum vertical underclearance requirement as it is very difficult to obtain a design exception. The cost of raising the grade of the bridge to obtain acceptable underclearance must take into account additional approach work.

(8) The width of the structure must be evaluated to determine whether it is functionally obsolete. If widening is necessary to upgrade the structure to current standards, or for maintaining traffic during construction, this must be stated in the report. Please refer to the MDOT Bridge Design Guides, Section 6.05 for acceptable bridge deck cross sections. This will include possible widening to meet current standards for radii. The CONSULTANT will describe how and where the widening is to take place and provide a plan view sketch showing the proposed widening. Specify if widening can be done within the deck overhang, or if additional beam lines and substructure width will be needed to accommodate the required deck cross section. Widening may also require additional approach work to transition between the roadway width and the new bridge width.

(9) The CONSULTANT must determine if part-width construction is possible or if the entire crossing must be closed and a detour used. Final detailed traffic control costs for construction will be determined by MDOT.

(10) Any work required for the approaches must be included in the report and these items accounted for on the Estimate Sheet.

b. The area immediately around the structure must be closely evaluated to determine if there are any site issues or constraints that may have an impact during construction. Each quadrant of the structure is to be evaluated and photo-documented. These include items such as:

c.

(1) Businesses or driveways close to the approaches.
(2) Utilities attached to or near the bridge.
(3) Signs or sign brackets attached to the bridge. Specify if the connections are bolted or welded.
(4) Poor alignment or geometrics.
(5) Approach and departure guardrail terminals or the presence of impact attenuators.
(6) Bank erosion or scour. Unusual channel features.
(7) Railroad tracks that have been removed from over or under the bridge.

(8) Proximity of other bridge structures.
(9) Is drainage sufficient? Any evidence of ponding on the structure?
(10) Is Right-of-Way limited and might additional ROW or easements be required?
(11) ITS components, such as cameras, changeable message signs, conduit, and other ITS elements.

d. Additionally the following items are some of the items that, if apply, must be evaluated and costs considered:

(1) Is the bridge historical? (MDOT PM to provide information if applicable)
(2) Does this bridge have special structural design features which may affect the repair options such as lack of load path redundancy, fracture critical members, category E' allowable fatigue stress details, etc? (See AASHTO Standard Specification for Highway Bridges, 17th edition, Section 10.3, tables 10.3.1A, 10.3.1B and 10.3.1C for descriptions and illustrative examples.)
(3) Is the minimum vertical underclearance deficient?
(4) Is the structure functionally obsolete? Will widening be required as part of rehabilitation effort?
(5) If it is a turn-around structure, or has a turn around on it, do the radii meet current standards? Is widening of the bridge required to meet current radii standards?
(6) Are there environmental issues that may impact the project?
(7) If it is a pedestrian structure, do the geometrics meet current ADA criteria? If not, consider what repair options would be necessary to meet the minimum criteria set by the ADA.
(8) Are there sidewalks on the bridge? If so, do the geometrics meet current ADA standard? Are there sidewalk ramps within the limits of the bridge approach? If so, do the sidewalk ramps meet current ADA standard?
(9) Determine impacts of the proposed bridge treatment on the existing horizontal and vertical alignments, pavements, curb and gutter, drainage, right of way (ROW), etc. Every effort shall be made to minimize ROW impacts within the limits of the projects. In areas of potential ROW impacts, the Consultant shall identify the potential need for additional ROW, by station or address, type of ROW required (grading permit, easement or fee), and roadside improvements proposed (i.e. fencing, turf establishment, landscaping, non motorized, etc.).
(10) Review and document the final scope for conformance to 3R/4R Guidelines for non freeway jobs and 4R, AASHTO and Interstate Standards for freeway jobs. Documentation shall include existing condition, treatment as per design

standards, and recommendation.

(11) Identify areas where bridge design standards cannot be met on the final proposed recommended treatment, give justification and documentation as to the reason, and prepare the design exception. The preparation of a Design Exception Request
form for the recommended proposed treatment may be necessary to fulfill the Federal Highway Administration requirements for structures on National Highway System (NHS) routes.

(12) Review and document the roadside safety related items (i.e. guardrail, barriers, attenuators, etc.) which need to be modified or included in the project. Documentation will include location, existing type and condition, and the recommended treatment.

(13) Document and identify any possible utility conflicts and estimate the cost of relocation and/or adjustment.

(14) Document and identify locations of possible environmental issues which may impact the project, and estimate the cost of treatment.

(15) Develop Construction Zone Traffic Control Concepts in accordance with the Michigan Department of Transportation Mobility Policy.

(16) All estimates and other project related items shall meet all MDOT requirements and detailing practices (i.e., format, materials, symbols, patterns, and layout) or as otherwise directed by MDOT.

If, during the site review, the CONSULTANT finds any structural condition that may cause the bridge to be load restricted (such as holes in beams, broken prestressing strands, etc.), or which may require other immediate action (such as lane closures or emergency repairs to holes in the deck, temporary supports, false decking due to spalled concrete, etc.), the CONSULTANT will notify the MDOT PM as soon as possible. The CONSULTANT will be provided with a list of contact information of key personnel within MDOT in the event that the MDOT PM is unavailable. The CONSULTANT will provide documentation of the condition (such as beam measurements, pictures taken, etc.) to MDOT as quickly as possible.

2. Scoping Checklist and Determining Repair Options

Completing the Scoping Checklist (provided by MDOT PM) and making an initial determination of the most appropriate repair option, based on the physical condition of the bridge, economic considerations, and engineering judgment, is to be done in the field.

The types of repair options that are to be considered must be separated into two major work type categories: 1) Capital Preventive Maintenance and 2) Rehabilitation / Replacement.

Capital Preventive Maintenance (CPM)

a. Joint Replacement
b. Pin and Hanger Replacement
c. Complete Painting
d. Zone Painting
e. Shallow Concrete Overlay
f. Thin Epoxy Overlay
g. Deck patching, Healer Sealer
h. Scour Countermeasures
i. HMA Overlay
j. Substructure Patching

Rehabilitation / Replacement

a. Deep Concrete Overlay
b. Superstructure Repairs
c. Substructure Repair (Substructures with an NBI rating of 4 or less)
d. Substructure Replacement
e. Deck Replacement
f. Superstructure Replacement
g. Structure Replacement

The Bridge Deck Preservation Repair Matrix (Attachment No. 1) must be consulted for reasonable deck repair options based on the condition of the deck surface and underside. This is to be used as a guide, and shall not substitute for sound engineering judgment. See **ENGINEERING ANALYSIS** for more discussion about the option choices.

3. Photographs

Photo-documentation of the bridge and the surrounding areas must be included in the report. All of the pictures must be mounted on 8½" X 11" media and are to be captioned with a description of what the picture is intended to show. Each copy of the bridge report must have this series of pictures showing at least the following items and sequenced in the following order:

a. Elevation views of both sides of the bridge
b. Deck surface (entire deck surface to be photographed, including joints)
c. Railing, sidewalks, brush blocks, raised shoulders or any other feature of the deck surface
d. Approaches
e. Underside of deck (to sufficiently document condition)
f. Typical superstructure elements (beams, diaphragms, cross bracing, lateral bracing, bearings, pin and hangers, etc.)

g. Abutments, including wingwalls and slope protection
h. Piers showing all faces
i. Waterways / railroad tracks
j. Major deteriorated areas
k. Load posting signs
l. Vertical clearance signs
m. Signs or ITS attached to the bridge including connections
n. Utilities including connections
o. Quadrant photos, showing businesses or other items that could affect the cost of the construction, including ITS components
p. Quadrant photos, showing side slopes, downspouts or other items that could affect the cost of construction.

In addition, pictures must be taken which will support the CONSULTANT's repair recommendations. All pictures must be captioned to describe the general view (such as north elevation, etc.) and to describe the pertinent item or deterioration. The deck surface photos will be an "aerial view" taken from a height of at least 12 ft above the surface of the deck. These photos will be taken after the deck delamination survey and the areas of delamination are expected to show clearly in the photo.

4. Testing

During the site review phase, the CONSULTANT may determine that material testing is desirable to better understand the condition of the deck and therefore make a better judgment on the best repair option. Advance approval of the MDOT PM is required prior to initiating any testing.

If the CONSULTANT PM determines that material testing is needed, a testing proposal must be submitted to the MDOT PM for approval. The testing proposal will show the bridges for which testing is to be performed, what tests are to be performed, what specific information is to be gained from the testing, how this information is to be used, and the cost of testing and necessary traffic control. Proposals submitted with insufficient justification for testing will be denied. Where the deck is beyond saving, as judged by visual indications, or where the appropriate repair option is clearly indicated, material testing will not be performed.

The results and analysis of any testing that is approved and performed will be discussed in the Site Review Findings section of the report and the actual test reports will be included in the Appendix.

ENGINEERING ANALYSIS

The engineering analysis phase will include an evaluation of the site review findings, and determination of the work type category of the appropriate repair (R&R or CPM). The degree of required analysis and required deliverables vary for the two work type categories.

1. Rehabilitation/Replacement Work Category

For proposed R & R work proceed with the preparation of and evaluation of two or

three repair strategies, including the estimate of cost of the repair strategies and the selection of the best repair option. This phase shall also consider the scope of road work and maintaining traffic concepts as outlined in the scope.

An initial repair option will have been determined during the site review in the field. The Consultant is required to perform an engineering analysis of this option and on the options above and below it from the list in the section "Scoping Checklist and Determining the most appropriate Repair Options". For example, if deck replacement is determined to be the most appropriate repair option, a cost estimate shall be prepared for the overlay and superstructure replacement options.

For the superstructure replacement and bridge replacement options, the Consultant will also analyze eliminating or correcting undesirable or deficient design characteristics (e.g., structural capacity, widening, etc.). Analysis of the load carrying capacity of some components of the bridge may be required.

2. Estimating Various Repair Options

Cost estimates for each of the Repair options will be prepared for each structure. A standard form Estimate Sheet with unit prices will be used (Provided by MDOT PM). The Estimate Sheet, on 8½" x 11" paper, provides spaces to show all of the repairs to be performed for that call for projects year. Calculations for the paint area will be prepared by the CONSULTANT and included in the Appendix of the report.

The estimates required are "early preliminary estimates" and not the more detailed "engineering estimates." The object is to determine the most economical method of treatment and to establish the budget. The more detailed estimates will be determined in the design phase (not a part of this authorization).

If additional information is necessary for a unit price not on the list, contact the MDOT PM, or Linda Reed, Bridge Scoping Engineer in Construction and Technology at (517) 322-5622.

3. Capital Preventive Maintenance Work Category

For proposed Capital Preventive Maintenance work proceed with the preparation of a cost estimate using the Cost Estimate Sheet. This phase shall also consider the scope of road work and maintaining traffic concepts as outlined in the scope. If additional information is necessary for a unit price not on the list, contact the MDOT PM.

REPORT

1. Rehabilitation / Replacement Work Category

The deliverables for a Rehabilitation/Replacement work category for this scope of work will be the reports, photographs, estimate sheets, field notes and scoping

checklist. One electronic PDF file will be submitted for each bridge scope included in the work package list. This PDF file shall be the report in its entirety. In addition to the PDF file, the consultant shall submit the Microsoft Excel files for each bridge.

For each bridge, a binder clip containing the scoping reports as described below will be submitted. The binder clip will contain all information pertaining to the site review findings and recommended repair options for each bridge. Three sets (hard copy) of each report will be submitted.

A summary sheet showing Bridge ID, bridge location, proposed work, and estimated cost per bridge shall serve as a cover sheet.

a. Table of Contents:
A table of contents will be provided for the complete document.

b. General Site Review Procedures:
This section will summarize the general procedures used during the site review. This information will include a table showing the site review dates for the bridge, equipment used, traffic control procedures, site review procedures, etc.

c. Executive Summary:
This is to include a statement of the recommended treatment for the bridge and the cost (in FY dollars as directed by the MDOT PM) of the initial repair. The executive summary will be a stand alone section and will not refer to other sections of the report, nor will the main text refer to information in the executive summary.

d. Field Site Review Findings:
This section will include, as a minimum, discussion of the following areas: Overall assessment of the condition of the bridge including an evaluation of the beam end thicknesses (webs & bottom flanges) taken during the site review. Sketches of beam end repair areas, substructure repair areas or widening options. Site issues, i.e., geometrics, maintenance of traffic, utilities, scour, etc. In the case where no site issues that would impact the rehabilitation of the structure were identified, a statement will be made that all areas were investigated and no issues were found. Test results and implications of the repair options. If no testing was performed, this will be stated in the report.

e. Rehabilitation Options:
This section will include a discussion of the rehabilitation options considered. For each option evaluated, a discussion of the necessary improvements and the associated costs will be included. The report must discuss and state the reasoning and judgment for selection of the recommended option. This discussion will also include the reasoning for the elimination of all other options, as appropriate.

f. Summary with Repair Recommendation:
This section will state the recommended course of action for the bridge and the

factors used in determining this recommendation. This section will also briefly discuss the effects of postponing the recommended improvements.

g. Maintaining Traffic / Mobility Summary
This section shall include an analysis of the traffic control plan in accordance with the Michigan Department of Transportation's Mobility Policy. Various traffic control alternatives shall be evaluated.

h. Cost Estimate Sheets
A cost estimate must be prepared for each repair option that was considered. The cost estimate sheet can be found in the appendix, attachment number 5.

i. Appendix:
Index sheet with Photo Titles
Word document with photos and descriptions
Scoping Checklist(s)
Field notes and sketches
Paint calculations
Table of beam end thickness readings
Lab test reports (if applicable)
Road preliminary estimate (separate spreadsheet)
Existing plan sheets (general plan of site and general plan of structure)
Current bridge inspection reports

2. Capital Preventive Maintenance Work Category

The deliverables for the Capital Preventive Maintenance work category bridges will be the executive summary sheet, scoping checklist, cost estimate sheet, bridge quantity sheets, field worksheets and pictures for each bridge. A summary sheet showing Bridge ID, bridge location, proposed work, and estimated cost per bridge shall serve as a cover sheet. One electronic PDF file will be submitted for each bridge scope included in the work package list. This PDF file shall be the report in its entirety. In addition to the PDF file, the consultant shall submit the Microsoft Excel files for each bridge. The package shall be submitted in a binder clip. Three sets of each binder clip will be submitted.

Each binder clip shall be arranged in the following format:
Summary Sheet
Table of Contents
Executive Summary
Estimate Sheets
Word Document with Photos and Descriptions
Scoping Checklists
Field Notes and Sketches
Calculations - Paint Areas, Deck Areas, etc.
Table of Beam End Thickness Readings (if applicable)
Maintaining Traffic Concepts
Current bridge inspection reports

Incomplete final reports or reports with errors will be returned to the Consultant for revision. Failure to make the required changes will be considered a failure to meet the terms of the scope of work.

PAYMENT SCHEDULE:

Compensation for this Scope of Services shall be on an **actual cost plus fixed fee** basis.

CONSULTANT PAYMENT – Actual Cost Plus Fixed Fee:

Compensation for this project shall be on an **actual cost plus fixed fee** basis. This basis of payment typically includes an estimate of labor hours by classification or employee, hourly labor rates, applied overhead, other direct costs, subconsultant costs, and applied fixed fee.

All billings for services must be directed to the Department and follow the current guidelines. The latest copy of the "Professional Engineering Service Reimbursement Guidelines for Bureau of Highways" is available on MDOT's website. This document contains instructions and forms that must be followed and used for billing. Payment may be delayed or decreased if the instructions are not followed.

Payment to the Consultant for services rendered shall not exceed the maximum amount unless an increase is approved in accordance with the contract with the Consultant. Typically, billings must be submitted within 60 days after the completion of services for the current billing. The final billing must be received within 60 days of the completion of services. Refer to your contract for your specific contract terms.

Direct expenses, if applicable, will not be paid in excess of that allowed by the Department for its own employees in accordance with the State of Michigan's Standardized Travel Regulations. Supporting documentation must be submitted with the billing for all eligible expenses on the project in accordance with the Reimbursement Guidelines. The only hours that will be considered allowable charges for this contract are those that are directly attributable to the activities of this project.

The use of overtime hours is not acceptable unless prior written approval is granted by the MDOT Region Engineer/Bureau Director and the MDOT Project Manager. Reimbursement for overtime hours that are allowed will be limited to time spent on this project in excess of forty hours per person per week. Any variations to this rule should be included in the priced proposal submitted by the Consultant and must have prior written approval by the MDOT Region Engineer/Bureau Director and the MDOT Project Manager.

The fixed fee for profit allowed for this project is 11.0% of the cost of direct labor and overhead.

TRAFFIC CONTROL

A. TRAFFIC CONTROL & PERMITS DURING SITE REVIEW

The traffic control during the site review will be the responsibility of the CONSULTANT. Permits for the traffic control and for working in the MDOT right-of-way must be obtained from the MDOT TSC in which county the bridges are located, prior the start of work. On the permit application, please indicate the Control Section and Job Number. Allow ample time

for permit issuance. The CONSULTANT must follow all requirements as issued with the Permit from the MDOT TSC.
Nighttime lane closures for deck inspection may be allowed at the discretion of the MDOT PM. Approval for nighttime work must be obtained prior to the start of work.

B. RAILROAD FLAGGING & PERMITS

If it is necessary to work over an active railroad during the site review phase, the CONSULTANT will be responsible for obtaining the necessary permits and flagmen. Costs for this will be considered an expense and must be detailed in the traffic control section in the proposal and on the invoice.

GENERAL

C. SOFTWARE REQUIREMENTS

The CONSULTANT is required to own and use Microsoft Excel version 2002 or later for all spreadsheets and Microsoft Word version 2002 or later for word processing. The requested electronic files (see Section V-C, **REPORT**) must be submitted in these applications. Electronic file templates for all of the attachments can be provided via E-mail, from the MDOT Bulletin Board, or on a diskette in these applications. Contact the MDOT PM or DPM with your E-mail address or request a diskette.

D. EQUIPMENT AND SAFETY

The CONSULTANT will be responsible for obtaining and operating the high reach equipment for inspection under the bridge. However, MDOT will provide an under bridge inspection crane for the CONSULTANT's use in certain situations, for example, high river and railroad crossings. The CONSULTANT will still be responsible for traffic control and for scheduling. Contact the MDOT PM a minimum of 14 days in advance for scheduling use of the equipment.
During the inspection, the CONSULTANT is responsible for traffic control and all aspects of personal safety of his or her staff. Traffic control will follow standard MDOT procedures. The CONSULTANT will be responsible for obtaining all permits and notifying the Region Engineer in writing (with a copy to the MDOT PM) of the time and location of the work.

All other inspection equipment and personal safety equipment such as hard hat, steel toed shoes, reflective vest, and eye protection will be responsibility of the CONSULTANT.

E. OTHER

No diving of river crossings is expected as part of this work. However, if it does become necessary, it will be dealt with under a separate authorization.

APPENDICES

Attachment A	Work Package Listing
Attachment No. 1.	Detailed Beam Survey Report
Attachment No. 2.	Bridge Scoping Checklist

Attachment No. 3. Structure Clearance Measurement Form

Attachment No. 4. Estimate Sheet

Attachment A

Work Package 1 - JN 110633, 110634, 110635, 110636, 110637, 110639, 110641, 110642

	STRUCTURE		Job Number	Facility Carried	Feature Intersection
1	**25031**	**X02**	**110633**	GTW RR	I-75
2	**25072**	**C01**	**110633**	M-54	GILKEY CREEK
3	**25084**	**S07**	**110633**	BELSAY ROAD	I-69
4	**29021**	**C03**	**110634**	M-57	BRADLO DRAIN
5	**32012**	**B03**	**110635**	M-25	PINNEBOG DRAIN
6	**32012**	**B04**	**110635**	M-25	SCHRAM DRAIN
7	**32031**	**C02**	**110635**	M-53	ELK DRAIN
8	**32091**	**C01**	**110635**	M-25	WHITE ROCK CREEK
9	**32092**	**C09**	**110635**	M-25	NO NAME DRAIN
10	**44031**	**X01**	**110636**	D&N RR	M-53
11	**44044**	**R04**	**110636**	I-69 WB	GTW RR (ABN)
12	**44044**	**S09**	**110636**	EB I-69	NEWARK ROAD
13	**44044**	**S15**	**110636**	M-53	I-69
14	**56021**	**R01**	**110637**	M-20	CSX/TITTABASSEE RIVER
15	**73021**	**C10**	**110639**	M-57	BRANCH OF DEER CREEK
16	**73021**	**C11**	**110639**	M-57	BRANCH OF BEAR CREEK
17	**73051**	**B03**	**110639**	M-13	KOEPKE DRAIN
18	**73051**	**C04**	**110639**	M-13	MESSNER DRAIN
19	**73081**	**C05**	**110639**	M-81	WEAVER DRAIN
20	**73131**	**B02**	**110639**	M-83	CASS RIVER
21	**74032**	**B04**	**110641**	M-19	S FORK CASS RIVER
22	**74062**	**C01**	**110641**	M-46	MIDDLE BRANCH OF CASS RIVER
23	**74071**	**B01**	**110641**	M-25	MILL CREEK
24	**79041**	**C01**	**110642**	M-46	RO SCH COUNTY DRAIN

DETAILED BEAM SURVEY REPORT

USE THIS FORM WHEN TRAFFIC ON BRIDGE IS: *WEST BOUND and EAST BOUND*

MDOT
Michigan Department of Transportation
Form 0267 (08/02)

INSPECTED BY: _____ DATE: _____

STRUCTURE NO. _____ REGION _____

FACILITY CARRIED _____ TOTAL SPANS: _____

Feature INTERSECTED _____ TOTAL PIERS: _____

total photos attached to inspection _____

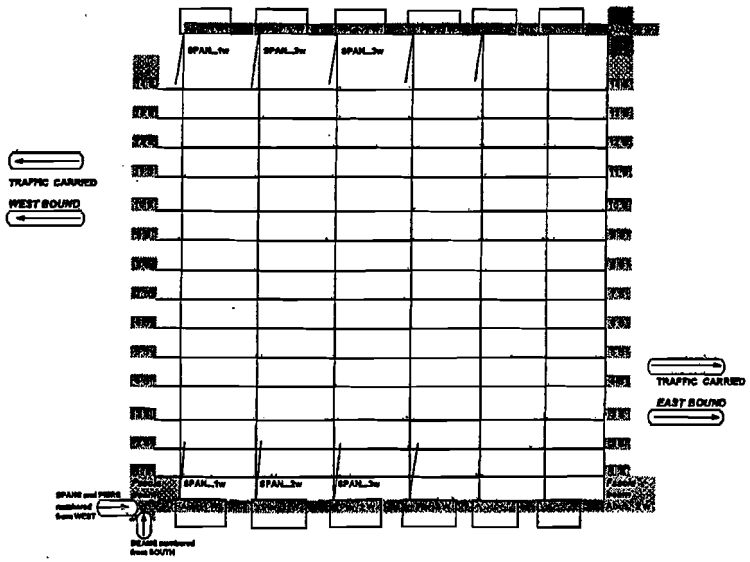

ERECTION DIAGRAM

follow NUMBERING SYSTEM as shown per traffic of road over

COMMENTS _____

distribution
original one
yellow copy one
copy two
copy three

BRIDGE OPERATIONS UNIT, CONSTRUCTION AND TECHNOLOGY DIVISION, PH. (517) 322 - 1386 FAX (517) 322 - 8604

DETAILED BEAM SURVEY REPORT

USE THIS FORM WHEN TRAFFIC ON BRIDGE IS: *SOUTH BOUND and NORTH BOUND*

MDOT
Michigan Department of Transportation
Form 0267 (08/02)

INSPECTED BY: _____ DATE: _____ PAGE ____ OF ____ (if multi sets)

STRUCTURE NO. _____ REGION _____

FACILITY CARRIED _____ TOTAL SPANS: _____

Feature INTERSECTED _____ TOTAL PIERS: _____

total photos attached to inspection _____

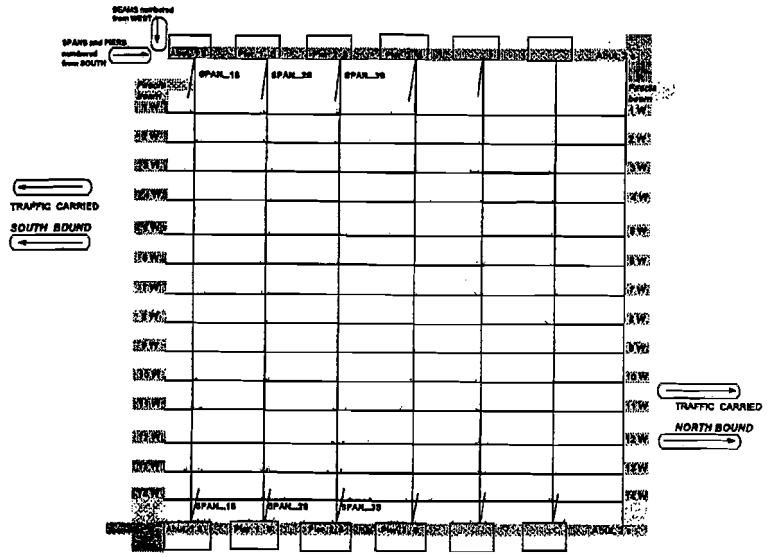

ERECTION DIAGRAM

follow NUMBERING SYSTEM as shown per traffic of road over

COMMENTS _____

distribution
original one
yellow copy one
copy two
copy three

BRIDGE OPERATIONS UNIT, CONSTRUCTION AND TECHNOLOGY DIVISION, PH. (517) 322 - 1386 FAX (517) 322 - 8604

ATTACHMENT No. 1

ATTACHMENT NO. 1 CONT

GUIDE TO MEASUREMENTS AND DETERIORATION

DETAILS REQUIRED

MDOT
Michigan Department of Transportation
Form 0267 (08/02)

DETAILED BEAM SURVEY REPORT

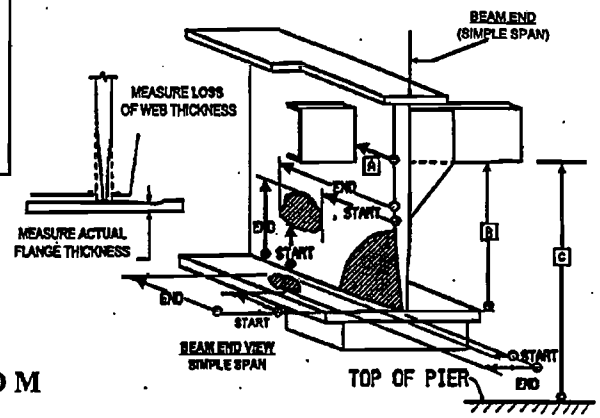

Example - BEAM END M

A DISTANCE FROM END OF BEAM TO DIAPHRAGM
B DISTANCE FROM BOTTOM OF DIAPHRAGM TO TOP OF BOTTOM FLANGE
C DISTANCE FROM BOTTOM OF DIAPHRAGM TO TOP OF PIER (OR ABUTMENT)

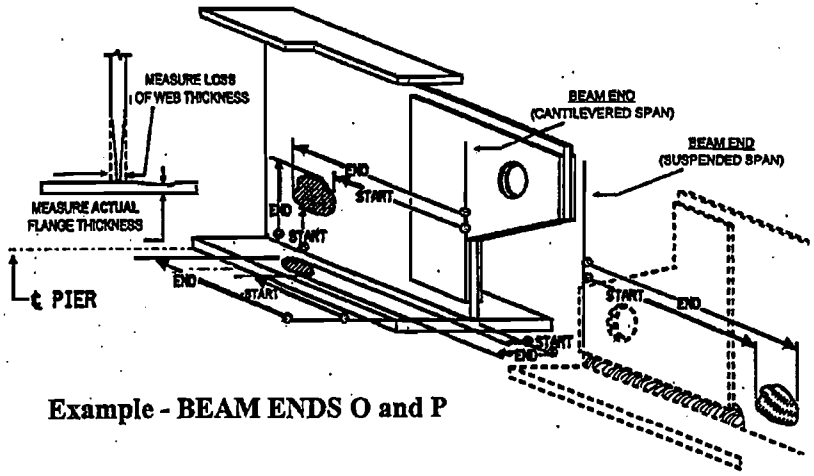

Example - BEAM ENDS O and P

MDOT
Michigan Department of Transportation
Form 0267 (08/02)

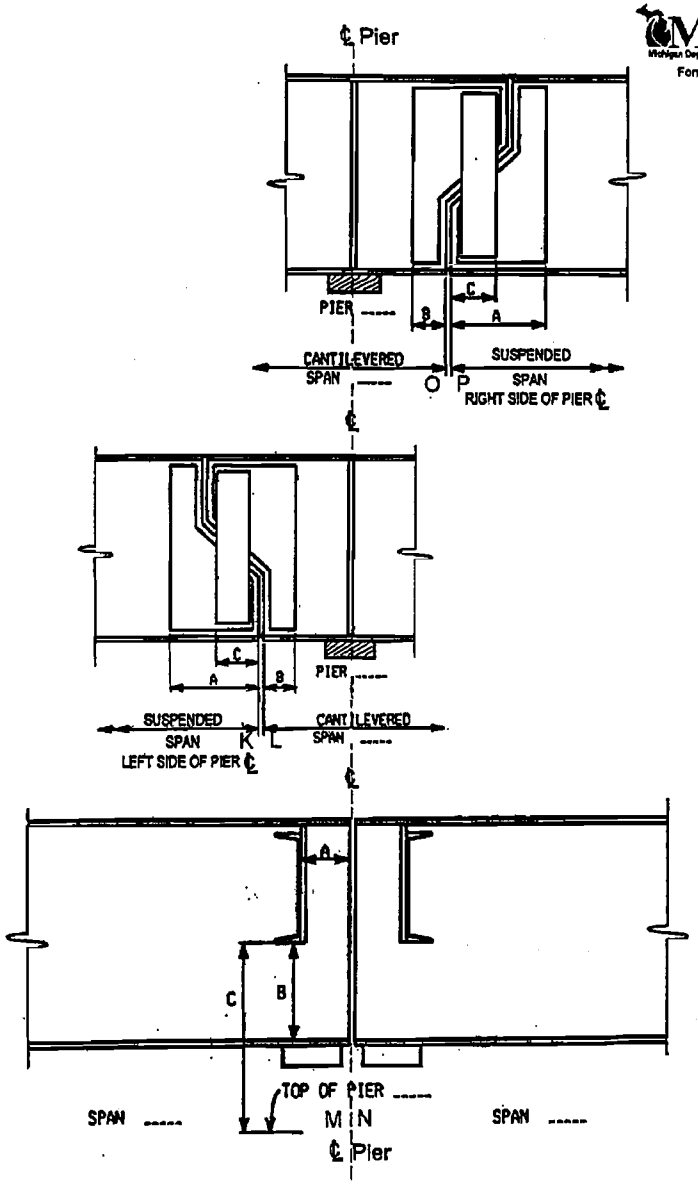

ATTACHMENT NO. 1 CONT

DETAILED BEAM SURVEY REPORT
FORMS (0267, 0267-1, 0267-2)
INSTRUCTIONS

FORMS NEEDED

Form 0267 is the cover sheet and one (1) is needed for each bridge regardless of orientation.

Form 0267-1 is for EB or WB bridges. You will need 1 form for each substructure unit that is near beam ends to be reported.

Form 0267-2 is for NB or SB bridges. You will need 1 form for each substructure unit that is near beam ends to be reported.

PRINTING FORMS

The forms are available on the MDOT Interchange Home (http://interchange/finadmin/formsmgt)

From the MDOT Home Page:
1- Click on MDOT Forms Services
2- Click on All Forms List
3- Scroll down to form desired (0267, 0267-1, or 0267-2) and click on "Printable".
4- Click the Print icon from the Acrobat tool bar.
5- In the Properties window, make sure that paper size is 11x17 and orientation is landscape
6- Print the form

FORM 0267

On this sheet, record the bridge identification and location information, the inspector's name, and the date of inspection. Sheet 0267 will always be sheet 1 of the final report.

For WB and EB bridges:
- Fill in the information on the left side of the form
- Cross out the right side of the form
- Beams are numbered from south to north
- Spans are numbered from west to east
- If more than 14 beams, use a second sheet for beams 15S, 16S, etc.
- If more than 6 spans, use a second sheet for spans 7W, 8W, etc.
- Add dashed lines as needed to specify locations of pin and hanger assemblies.

For NB and SB bridges:
- Fill in the information on the right side of the form
- Cross out the left side of the form
- Beams are numbered from west to east
- Spans are numbered from south to north
- If more than 14 beams, use a second sheet for beams 15W, 16W, etc.
- If more than 6 spans, use a second sheet for spans 7S, 8S, etc
- Add dashed lines as needed to specify locations of pin and hanger assemblies.

FORM 0267-1 OR 0267-2

Print one of these forms for each substructure unit that is near an area of losses. Number the sheets in ascending order of span number, following the convention established on form 0267.

For each form:

Enter the number of the pier in the center column.

Enter the span number on each side of the pier. For example, pier 1 will have span 1 to its left and span 2 to its right.

For abutments, cross out the word "PIER" and substitute "ABUT1" or "ABUT2" as appropriate. One half of the form will contain data for the span leading up to the abutment. Cross out the other half of the form for abutments.

If more than 14 beams, use another sheet using the same number as before but indicate "CONTINUED". Start with beam 15S or 15W as appropriate.

The wide columns at the far left and far right of these forms are for comments, references to photos, sketches, etc.

For piers without pin and hanger assemblies, circle "M" and "N" at the bottom of the form.

For piers with pin and hanger assemblies, circle "K" and "L" if the pin lies in the preceding span, circle "O" and "P" if the pin lies in the following span.

ATTACHMENT NO. 1 CONT

EXAMPLE BRIDGE

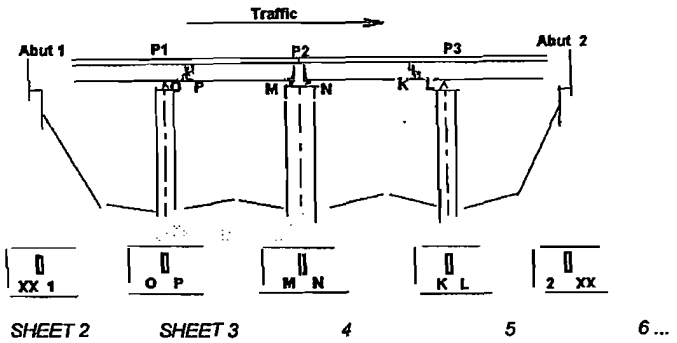

Abutment 1- Say no losses, no need for a sheet for this abutment. But note on form 0267 that no losses to report at abutment 1.

Pier 1- Put a "1" for the pier number, span 1 to the left and span 2 to the right. Circle "O" and "P" because the pin is in the following span (span 2).

Enter losses for the cantilevered beams in the left half of the sheet (span 1).

Enter losses for the suspended beams in the right half of the sheet (span 2).

Pier 2- Put a "2' for the pier number, span 2 to the left and span 3 to the right. Circle "M" and "N" because there are no pins in the area.

Enter losses for the end of span 2 in the left half of the sheet.

Enter losses for the end of span 3 in the right half of the sheet.

Pier 3- Put a "3'" for the pier number, span 3 to the left and span 4 to the right. Circle "K" and "L" because the pin is in the preceding span (span 3).

Enter losses for the suspended beams in the left half of the sheet (span 3).

Enter losses for the cantilever beams in the right half of the sheet (span 4).

Abutment 2- Say this abutment has losses. Cross out "PIER" and write in "ABUT 2" in the center column. Put span 4 in the left side, cross out the right side of the form.
Enter losses for the abutment end of span 4 in the left half of the sheet.

GENERAL INSTRUCTIONS

Number sheets consecutively in order of increasing span number. Put the bridge ID on all sheets in case they become separated.

Observe the span and beam numbering and orientation conventions. Use the direction of traffic for determining orientation rather than compass direction.

Photographs are highly recommended. In labeling photographs, use the same convention as on the forms. Numbering the photographs and indicating on the form locations of photos by numbers if recommended.

Please check photocopies for legibility before transmitting.

WHERE TO SUBMIT

Send copies to:

Bridge Management Unit, C&T Division
Bridge Operations Unit
8885 Ricks Road
P.O. Box 30049
Lansing, MI 48909

Special Structures Unit, Design Division
425 W. Ottawa
P.O. Box 30050
Lansing, MI 48909

Structures Maintenance, Maintenance Division
6333 Old Lansing Road
Lansing, MI 48909

QUESTIONS

Contact Robert Kelley of Bridge Management Unit, C&T Division
(517) 322-1398
E mail: kelleyr@michigan.gov

MDOT

Form 0267-2 (03/02)

PAGE ____ OF ____

DETAILED BEAM SURVEY REPORT
(WELDED GIRDER OR ROLLED BEAM)

USE this form when TRAFFIC ON BRIDGE is: *SOUTH* or *NORTH Bnd.*

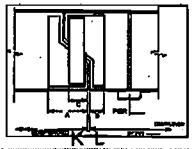

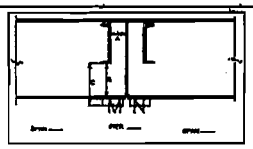

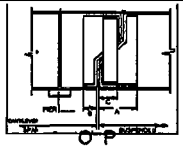

SUSPENDED

FACILITY CARRIED: _____

INSPECTED BY: _____ DATE: _____

STRUCTURE NO. _____ REGION _____

ALWAYS CIRCLE ABOVE TO NOTE APPLICABLE CASE USED IN FORM

COMMENTS & references to photos and sketches

SPAN S

PIER S

SPAN S

COMMENTS & references to photos and sketches

| WEB LOSS MEASUREMENTS | | | | | | FLANGE LOSS MEASUREMENTS | | | | | |

ATTACHMENT NO. 1 CONT

MDOT Michigan Department of Transportation

Form 0267-1 (03/02)

DETAILED BEAM SURVEY REPORT

(WELDED GIRDER OR ROLLED BEAM)

USE this form when TRAFFIC on BRIDGE is: WEST or EAST Bnd.

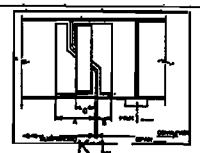

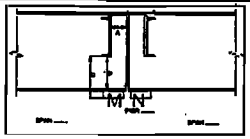

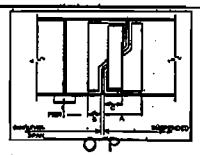

PAGE ____ OF ____

FACILITY CARRIED: _____

INSPECTED BY: _____ DATED: _____

STRUCTURE NO. _____ REGION _____

ALWAYS CIRCLE ABOVE TO NOTE APPLICABLE CASE USED IN FORM

COMMENTS & references to photos and sketches

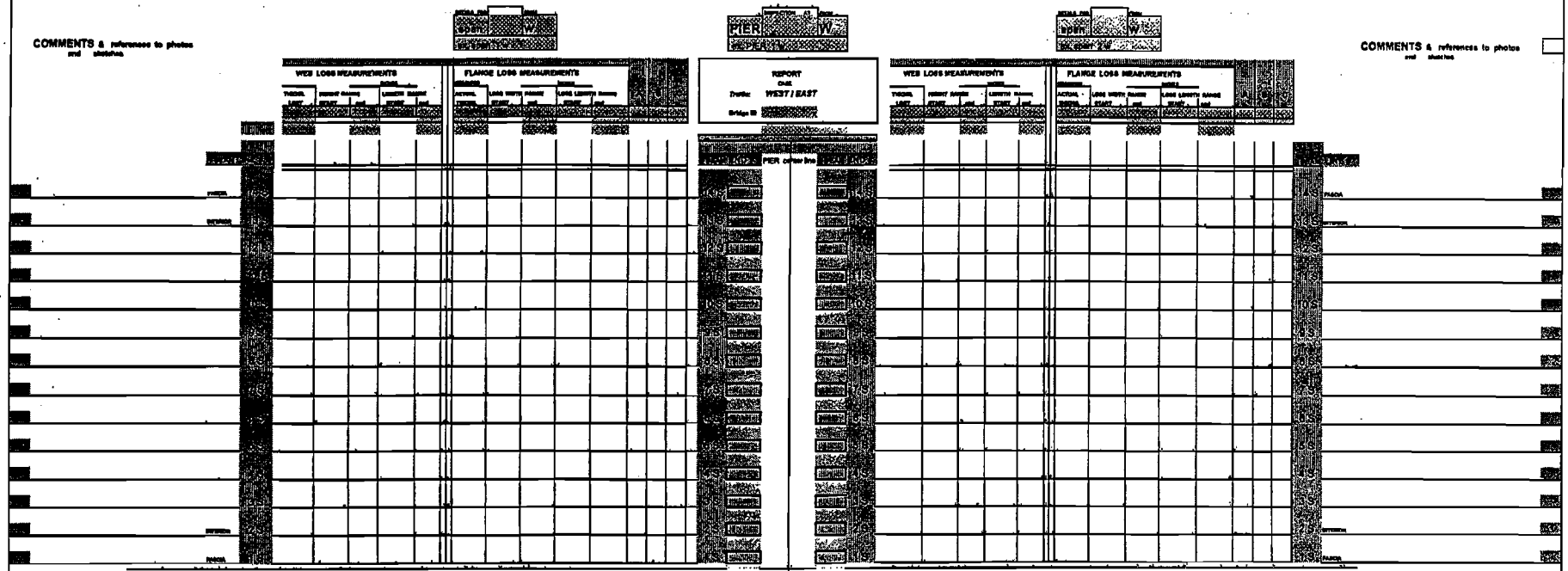

COMMENTS & references to photos and sketches

BRIDGE OPERATIONS UNIT, CONSTRUCTION AND TECHNOLOGY DIVISION, PH. (517) 322 - 1398 FAX (517) 322 - 5664

BRIDGE OPERATIONS UNIT, CONSTRUCTION AND TECHNOLOGY DIVISION, PH. (517) 322 - 1398 FAX (517) 322 - 5664

← K M O

→ L N P

any freehand drawing this side

any freehand drawing this side

ATTACHMENT NO 2

Bridge Scoping Checklist

Site Description:

Control Section _____ Bridge Number _____ Structure Number _____

Location Description _____

County _____ TWP _____ Range _____ Town _____ Section(s) _____

Within Federal-aid Urban Boundary ____ Yes ____ No

NFC of facility over: _____ this an NHS route? ___Yes ___ No

What is the ADT _____ Year ADT _____ Percentage Commercial ___

Is the speed limit posted over the structure ___ Yes ___ No MPH _____

Length of Bridge _____ Out to Out Width _____ Curb to Curb Width _____

No. of thru lanes ___ No. of ramp lanes ___ No. of turn lanes ___

Travel way width _____ Road shoulder width _____ Bridge shoulder width _____

Travel way material _____ Shoulder material _____

Does this structure constrict the roadway? ___ Yes ___ No

Feature under structure: _____ Is this an NHS route? Yes___ No ___

If yes does it meet minimum vertical clearance? ___ Yes ___ No

If no list span(s) and posted clearance: _____

If water way list the watershed: _____

Total number of lanes under entire structure (if applicable) _____

Is this bridge part of an interchange? ___ Yes ___ No Exit# _____

Check which surrounding area(s) best applies?
___ Residential ___ Urban ___ Rural ___ Commercial

Are there any adjacent residences or businesses? ___Yes ___ No

Is this structure considered "Functionally Obsolete" ___ Yes ___ No

ATTACHMENT NO. 2 CONT

Bridge Scoping Checklist

History & Specifications

Control Section _____ Bridge Number _____ Structure Number _____

Location Description _____

Stringer Type _____ Design Loading _____ No. of Spans _____ Skew ° _____

Year Built _____ As Built Plans Available Yes __No __ Plan Ref. No. _____

Last Project Date _____ Job No. _____ Let Date _____ Item No. _____

Project Work Summary:

_____

Previous Project Date _____ Job No. _____ Let Date _____ Item No. _____

Project Work Summary:

_____

Describe any past routine maintenance: _____

_____

Is this bridge "Structurally Deficient"? __Yes __No Sufficiency Rating _____

This is an "ON SYSTEM" structure __ This is an "OFF SYSTEM" structure __

Deck Surface Type _____ Deck Thickness ____ Parabolic __ Uniform __

Stay in Place Forms Yes__ No __ Temporary False Decking Yes__ No __

Bridge Railing Type _____ Expansion Joint Device Type _____

Approach Material _____ C&G Yes __ No __ Drainage Type _____

Is this bridge "Scour Critical" Yes __No __ N/A __

Abutment Type _____ Are there deep footings? Yes __ No __

Pier Type _____ Are there deep footings? Yes __ No __

Slope Protection Material _____ Sidewalks (up to / under) Yes__ No __

Signs are mounted on this bridge __ Utility Ducts Hang or are Cast in Deck __

ATTACHMENT NO. 3

Michigan Department of Transportation 1190 (05/07)

FILE 205

STRUCTURE CLEARANCE MEASUREMENTS

☐ INTERIM REPORT ☐ FINAL REPORT

DISTRIBUTION: Bridge Management Engineer of C & T, Engineer of Utilities & Permits, Engineer of Traffic & Safety, Region Bridge Engineer, Region Files

NOTE: Refer to instructions in the CONSTRUCTION MANUAL for detailed description and examples.

TO: BRIDGE MANAGEMENT ENGINEER CONSTRUCTION & TECHNOLOGY DIVISION	FROM (Region/TSC Construction Engineer)	REGION/TSC	DATE
FACILITY CARRIED	FEATURE INTERSECTED	CONTROL SECTION	
LOCATION		STRUCTURE NO.	

A ROUTE UNDER STRUCTURE

Check boxes to indicate direction of inventory. For multiple routes under, complete form for each route.

		LEFT OPENING		RIGHT OPENING	
		☐ SOUTH BOUND	☐ WEST BOUND	☐ NORTH BOUND	☐ EAST BOUND
	ITEM NUMBER AND DESCRIPTION	FEET	INCHES	FEET	INCHES
54	Minimum Underclearance	*		*	
10	Best Underclearance (10' Wide Load)				
47	Total Horizontal Clearance	.		.	
55	Minimun Right Lateral Clearance	.		.	
56	Minimum Left Lateral Clearance	.		.	
	Signed Underclearance				

B ROUTE CARRIED BY STRUCTURE - Multiple Level Structures or Thru Trusses Only

Check boxes to indicate direction of inventory.

		LEFT OPENING		RIGHT OPENING	
		☐ SOUTH BOUND	☐ WEST BOUND	☐ NORTH BOUND	☐ EAST BOUND
	ITEM NUMBER AND DESCRIPTION	FEET	INCHES	FEET	INCHES
53	Minimum Vertical Clearance Over Deck	*		*	
10	Best Vertical Clerance Over Deck (10' Wide Load)	*		*	
	Signed Underclearance				

DATE OF INITIAL RESTRICTION (If traffic is being maintained)	DATE STRUCTURE OPEN TO TRAFFIC

REMARKS

MEASUREMENTS BY (Signature)	DATE
PROJECT ENGINEER (Signature)	DATE

*** On signle roadways with two-way traffic, use right opening and record highest minimum underclearance without crossing over centerline.**

EXAMPLES ON BACK

ATTACHMENT NO. 3 CON'T

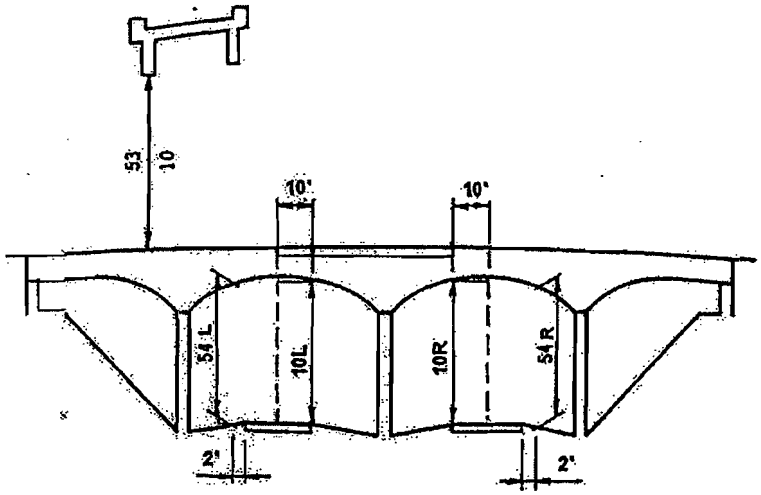

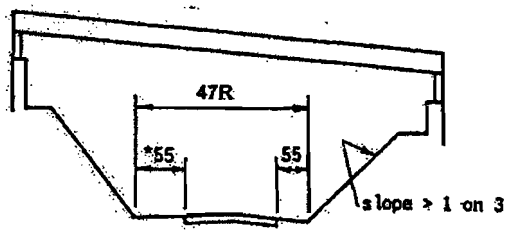

Item 55 - Minimum lateral clearance on right.

* Item 56 - Minimum lateral clearance on left. Code left side for structure over one-way traffic.

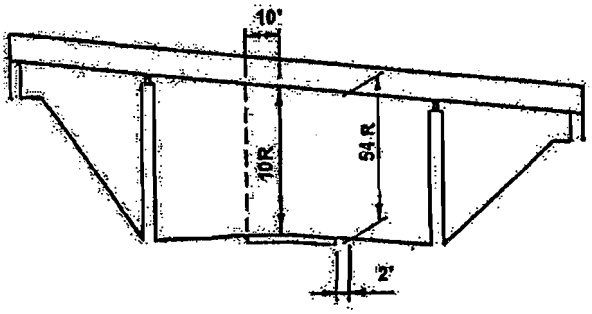

* Take measurement 2ft off edge of pavement unless underclearance is less over pavement.

Item 10L and 10R - Minimum vertical clearance best 10'.

Item 54L and 54R - Minimum vertical underclearance. For divided highways, record both.*

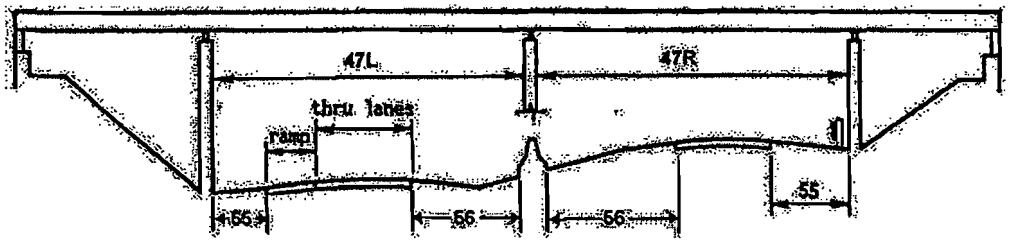

Items 55, 56 and 47 for divided highways. Measure both sides and record the minimum for items 55 and 56.

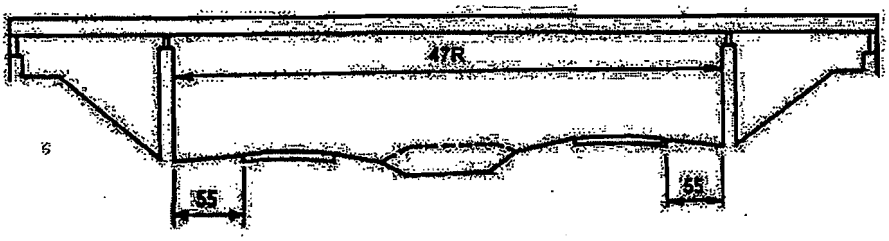

Item 56 - Minimum lateral clearance on left. Code as 000 for a dual highway with no obstruction in the median area.

ATTACHMENT NO 4

2010

_____ CALL FOR PROJECTS
BRIDGE REPAIR COST ESTIMATE

REV. 1/20/10

ENGINEER: DATE: DECK AREA: SFT STRUCTURE ID:
LOCATION: DECK DIM:
PRIMARY REPAIR STRATEGY: STR. TYPE:

WORK ITEM	QUANTITY	DIMENSION	UNIT COST		TOTAL
NEW BRIDGE					
Multiple spans, Concrete (add demo. & road approach & traffic control)		SFT	$160.00	/SFT	
Multiple spans, Steel (as above)		SFT	$175.00	/SFT	
Single span (or multi span over water), Concrete (as above)		SFT	$190.00	/SFT	
Single span (or multi span over water), Steel (as above)		SFT	$220.00	/SFT	
Pedestrian Bridge (includes removal, add traffic control)		SFT	$285.00	/SFT	
Other					
NEW SUPERSTRUCTURE					
Concrete (includes removal of old super & new railing, add traffic control & approach)		SFT	$120.00	/SFT	
Steel (as above)		SFT	$150.00	/SFT	
Over Water (add to new superstructure cost)		SFT	$28.00	/SFT	
Other					
WIDENING					
Added portion only. ft of width (add road approach widening)		SFT	$185.00	/SFT	
Other					
NEW DECK					
Includes removal of old deck & new railing (add traffic control & approach)		SFT	$70.00	/SFT	
Other					
DEMOLITION					
Entire bridge, grade separation		SFT	$27.00	/SFT	
Entire bridge, over water		SFT	$36.00	/SFT	
Other					
SUPERSTRUCTURE REPAIR					
Concrete Deck Patch (includes hand chipping)		SFT	$32.00	/SFT	
HMA Cap (no membrane - add bridge rail if req'd)		SFT	$1.25	/SFT	
HMA Overlay with WP membrane (add bridge rail if req'd)		SFT	$5.00	/SFT	
Removal of Concrete Wearing Course (latex) or Epoxy Overlay		SFT	$1.50	/SFT	
Removal of HMA Overlay		SFT	$1.00	/SFT	
Epoxy Overlay		SYD	$34.00	/SYD	
Shallow Overlay (includes joint replmt & hydro, add bridge rail if req'd)		SFT	$25.00	/SFT	
Deep Overlay (includes joint replmt & hydro, add bridge rail if req'd)		SFT	$26.00	/SFT	
PCI Beam End Repair ($2000-$4000 per beam end)		EA	$3,000.00	EA	
Repair Structural Steel ($2400 bolted, $6200 welded)		EA	$5,000.00	EA	
High Load Hit Repair (PCI Beam)		SFT	$200.00	/SFT	
Paint Structural Steel		SFT	$9.00	/SFT	
Partial Painting		SFT	$18.00	/SFT	
Pin & Hanger replacement (includes temporary supports)		EA	$6,600.00	EA	
Other					
SUBSTRUCTURE REPAIR					
Pier repair (measured x 2) Replace unit if spalled area > 30%		CFT	$200.00	/CFT	
Pier repair over water (measured x 2)		CFT	$230.00	/CFT	
Pier replacement		CFT	$75.00	/CFT	
Abutment repair (measured x 2)		CFT	$200.00	/CFT	
Temporary Supports for Substructure Repair		EA	$1,800.00	EA	
Slope Protection repairs		SYD	$80.00	/SYD	
Other					
MISCELLANEOUS					
Expansion or Construction Joints (includes removal)		FT	$420.00	/FT	
Bridge Railing, remove and replace		FT	$215.00	/FT	
Thrie Beam Railing retrofit		FT	$30.00	/FT	
Deck Drain Extensions		EA	$500.00	EA	
Scour Countermeasures		LSUM		LSUM	
Other					
ROAD WORK					
Approach Pavement, 91/2" RC (add C & G, GR, Slope, Shldr.) 40' ea. end		SFT	$8.00	/SFT	
Approach Curb & Gutter (18' ea. quad.)		FT	$36.00	/FT	
Guardrail Anchorage to Bridge (<40')		quads	$1,400.00	/quad	
Guardrail, Type B or T (beyond GR anchorage to bridge, <200')		FT	$20.00	/FT	
Guardrail Ending (end section)		EA	$1,800.00	/EA	
Roadway Approach work (beyond approach pavement)		LSUM		LSUM	
Utilities		LSUM		LSUM	
Other					
TRAFFIC CONTROL - Unit Cost to be determined by Region or TSC T&S					
Part Width Construction		LSUM		LSUM	
Crossovers		EA	$250,000.00	EA	
Temporary Traffic Signals		set	$18,000.00	/set	
RR Flagging		LSUM		LSUM	
Detour		LSUM		LSUM	
Other					
CONTINGENCY (10% - 20%) (use higher contingency for small projects)		%	$0.00		$0.00
MOBILIZATION (estimate at 5% but put "10% max" in pay item description) (per Design Update 2009-	5.0	%	$0.00		$0.00
INFLATION (assume 5% per year, beginning in 2011)		%	$0.00		$0.00

(DOES NOT INCLUDE PE & CE) CONSTRUCTION TOTAL $0.00

ATTACHMENT NO 4 CONT

CAPITAL SCHEDULED MAINTENANCE
BRIDGE PROJECT COST ESTIMATE

2010

_____REGION FY_____

ENGINEER: DATE: DECK AREA: STRUCTURE NO:
LOCATION: DECK DIM: XXX-XXXXX
PRIMARY WORK ACTIVITY: STR. TYPE:

WORK ACTIVITIES		QUANTITY	DIMENSION	UNIT COST	TOTAL
DECK					
Bridge Deck Surface Repair	(deck patching)		SYD	none /SYD	
Patching Concrete, C-L	(deck or barrier rail patching)		CYD	$700.00 /CYD	
Penetrating Floodcoat on Bridge Deck			SYD	$16.00 /SYD	
Crack Sealer			FT	$4.50 /FT	
Water Repellant Treatment, Penetrating	(deck surface)		SYD	$13.00 /SYD	
Concrete Surface Coating	(concrete barrier rail, deck slab fascia)		*SYD	$12.00 /SYD	
Resealing Bridge Construction Joints	(hot poured rubber)		FT	$10.00 /FT	
End Header Replacement			FT	$70.00 /FT	
Concrete, Grade D			CYD	$700.00 /CYD	
Reinforcement, Steel, Epoxy Coated			LBS	$1.40 /LB	
Adhesive Anchoring of Horiz. Bars			EA	$21.00 /EA	
Drain Casting, Type 1			EA	$650.00 /EA	
Drain Casting, Type 2			EA	$650.00 /EA	
Drain Casting Assembly, Type 1			EA	$800.00 /EA	
Drain Casting Assembly, Type 2			EA	$800.00 /EA	
Deck Drain , Extension			EA	$500.00 /EA	
Downspout Replacement			EA	$2,000.00 /EA	
PVC Downspout			EA	$2,000.00 /EA	
PE End Header Box System			EA	$2,000.00 /EA	
Embedded Galvanic Anode			EA	$22.00 /EA	
Other					
SUPERSTRUCTURE					
Spot Painting	(80% clean, 20% coat)		*SFT	$20.00 /SFT	
Patching Concrete, C-L	(concrete beam patching)		CYD	$700.00 /CYD	
Water Repellent Treatment, Penetrating	(concrete fascia beams)		SYD	$13.00 /SYD	
Concrete Surface Coating	(concrete fascia beams)		*SYD	$12.00 /SYD	
Other					
SUBSTRUCTURE					
Patching Concrete, C-L	(substructure patching)		CYD	$700.00 /CYD	
Patch Forming	(vertical & overhead surfaces)		SFT	$26.00 /SFT	
Concrete Surface Coating	(vertical surfaces)		*SYD	$12.00 /SYD	
Substructure Horizontal Surface Sealer	(horizontal surfaces)		*SYD	$18.00 /SYD	
Water Repellent Treatment, Penetrating			SYD	$13.00 /SYD	
Other					
DEMOLITION					
Hand Chipping, Shallow	(~3" deep)		SYD	$110.00 /SYD	
Hand Chipping, Deep	(~6" deep min)		SYD	$150.00 /SYD	
Hand Chipping, Other Than Deck	(vertical & overhead surfaces)		CFT	$60.00 /CFT	
Structures, Rehabilitation, Rem Portions	(slope protection removal)		*CYD	$225.00 /CYD	
Structures, Rehabilitation, Rem Portions	(drain casting removal)		*EA	$500.00 /EA	
False Decking			SFT	$1.00 /SFT	
Other					
MISCELLANEOUS					
Joint, Expansion, Erg	(pavement joint)		FT	$11.25 /FT	
Joint, Pressure Relief, 4 inch			FT	$50.00 /FT	
Embankment, Structure, CIP			CYD	$16.00 /CYD	
Backfill, Structure, CIP			CYD	$20.00 /CYD	
Slope Paving, Header			FT	$60.00 /FT	
Slope Paving, Concrete			SYD	$60.00 /SYD	
Slope Paving, Precast Concrete			SYD	$60.00 /SYD	
Other					
TRAFFIC CONTROL					
Maintaining Traffic	(from TSC or Region T&S)		LS	LS	
Other					
MOBILIZATION		10 %		$0.00	$0

(DOES NOT INCLUDE PE & CE) CONSTRUCTION TOTAL $0

* Estimated as unit shown, Paid for as LUMP SUM

Rev, 1/22/10