APPENDIX B

CONNECTION DETAILS BETWEEN PREFABRICATED ELEMENTS

COMMONLY USED PBES CONNECTION DETAILS

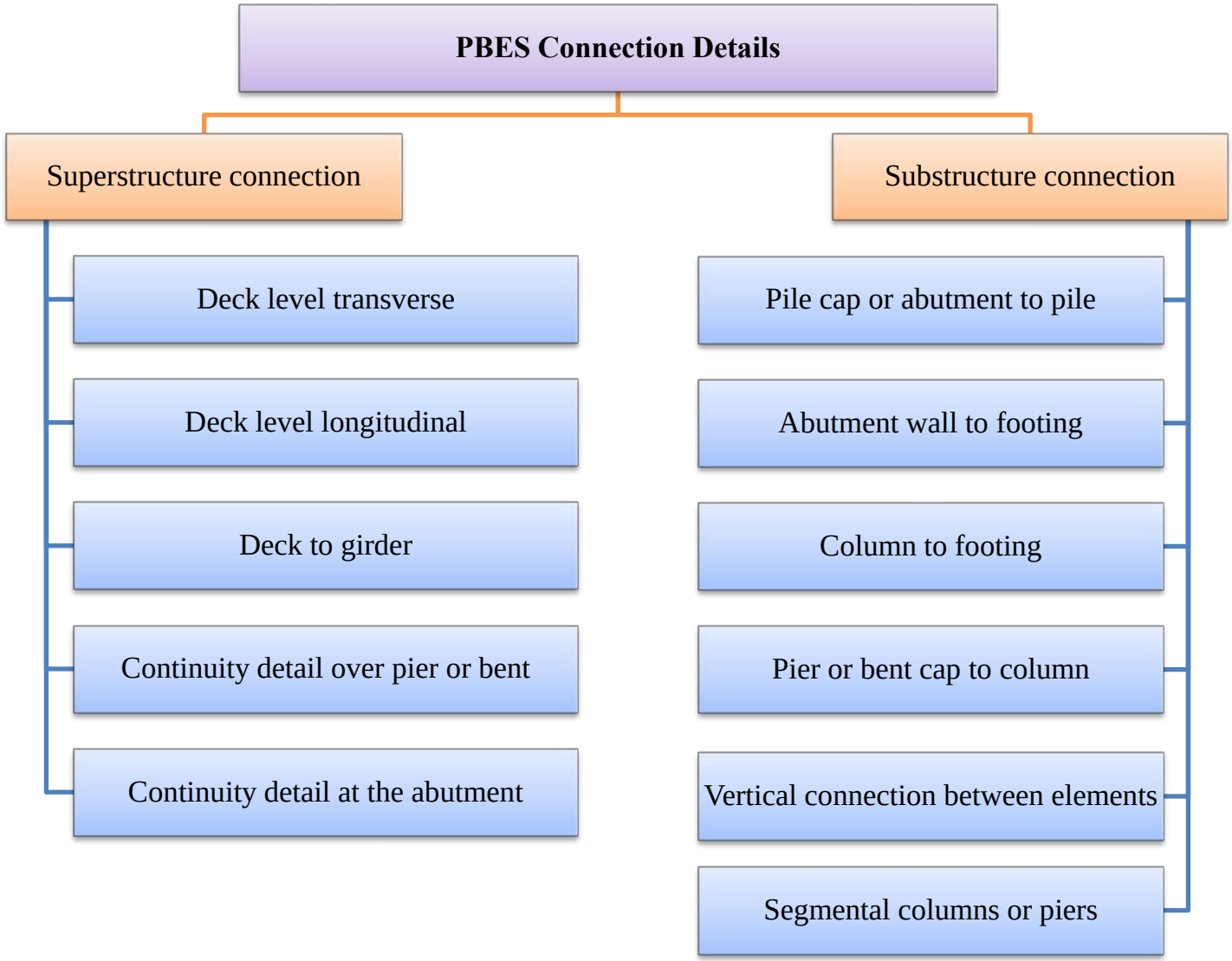

CONNECTION DETAILS LIBRARY

Rank description

Rank 1 : Represents connection details that have either been used on multiple projects or have become standard practice by at least one owner agency.

Rank 2 : Represents connection details that have been used only once and were found to be practical.

Rank 3 : Represents connection details that are either experimental or conceptual.

FULL-DEPTH DECK PANEL

Deck level transverse connection

FULL-DEPTH DECK PANELS

Panel-to-panel transverse connection

Rank	Joint details	Description/Comments
1	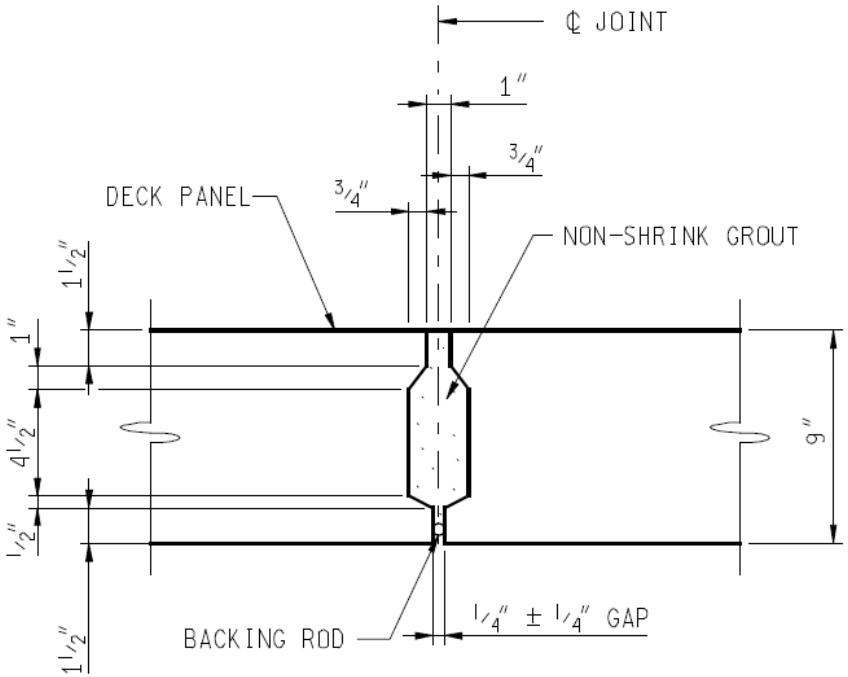 Implemented projects: I-84 / Route 8 Interchange, Waterbury, CT Parkview Ave over US-131, Kalamazoo, MI **Challenges** are to: Ensure a solid and tight grouted connection. Maintain adequate space between the panels (tolerances).	The panels shall be placed at the nominal spacing shown on the plans with a 1/4" wide gap between the panels. The width of the gap can vary due to tolerances of the panels. Grout for shear keys shall be rodded or vibrated to ensure that all voids in the shear keys are filled. Use as a transverse joint combined **with longitudinal post-tensioning (PT)**. Use of this detail **without PT is discouraged due to joint durability issues**. PT stress level of 250 psi (concentric) is recommended (AASHTO LRFD). **Designed to transmit shear and moment with proper PT application.** Note: Used in a large number of bridges. Performance data is available.

FULL-DEPTH DECK PANELS

Panel-to-panel transverse connection

Rank	Joint details	Description/Comments
2	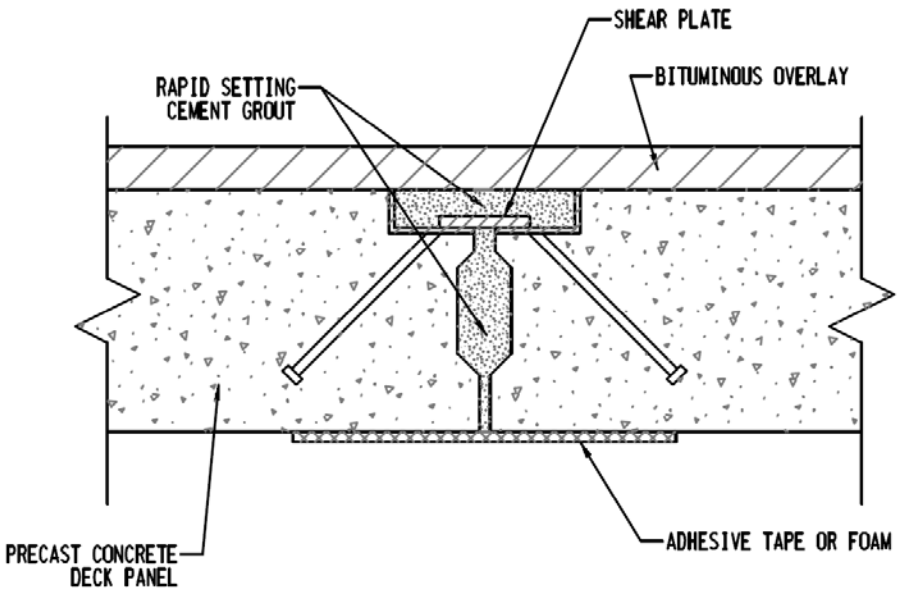 Source: FHWA Connection Manual Implemented projects: Virginia Department of Transportation, Route 7 over Route 50. Note: New detail. Performance data may be limited.	Continuity is provided using grouted shear key with high-early-strength grout and PT. To further improve shear transfer, welded sliding shear plates are installed across each transverse joint. Note: Grout above the shear plate is filled after PT ; hence, not compressed and may yield to durability problems associated with steel corrosion. **Designed to transmit shear and moment with proper PT application.** **Challenges:** Field welding. Detection and prevention of steel plate corrosion. **Q:** Do we need steel plates? Note: With PT the system becomes very rigid, thermal gradient is the governing load.

FULL-DEPTH DECK PANELS

Panel-to-panel transverse connection

Rank	Joint details	Description/Comments
1	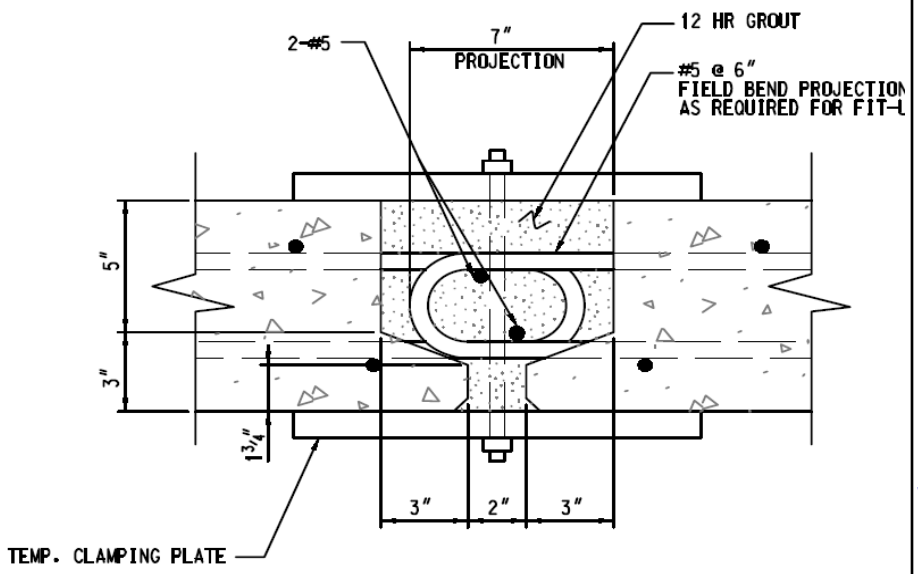 Source: FHWA Connection Manual **Q:** Do we need steel at the connection? Note: For this specific geometry of the connection, steel is required to transfer shear even with PT. Vertical surfaces can transfer shear if there is a good bond or adequate friction under compression.	Implemented projects: Richmond Road over US285, CO Self consolidating concrete (SCC) is used. Designed to transmit moment and shear. **Challenges:** Difficulty feeding the transverse bars between the two panels due to conflicts with the post-tension ducts; hence, prestressing strands were used. Fit up problem: the projecting tie bars conflicted with the adjacent panels. These bars had to be bent in the field. Initially the SCC leaked through the forms. Subsequent pours were sealed properly. Performance data might be available at the respective DOT.

FULL-DEPTH DECK PANELS

Panel-to-panel transverse connection

Rank	Joint details	Description/Comments
2	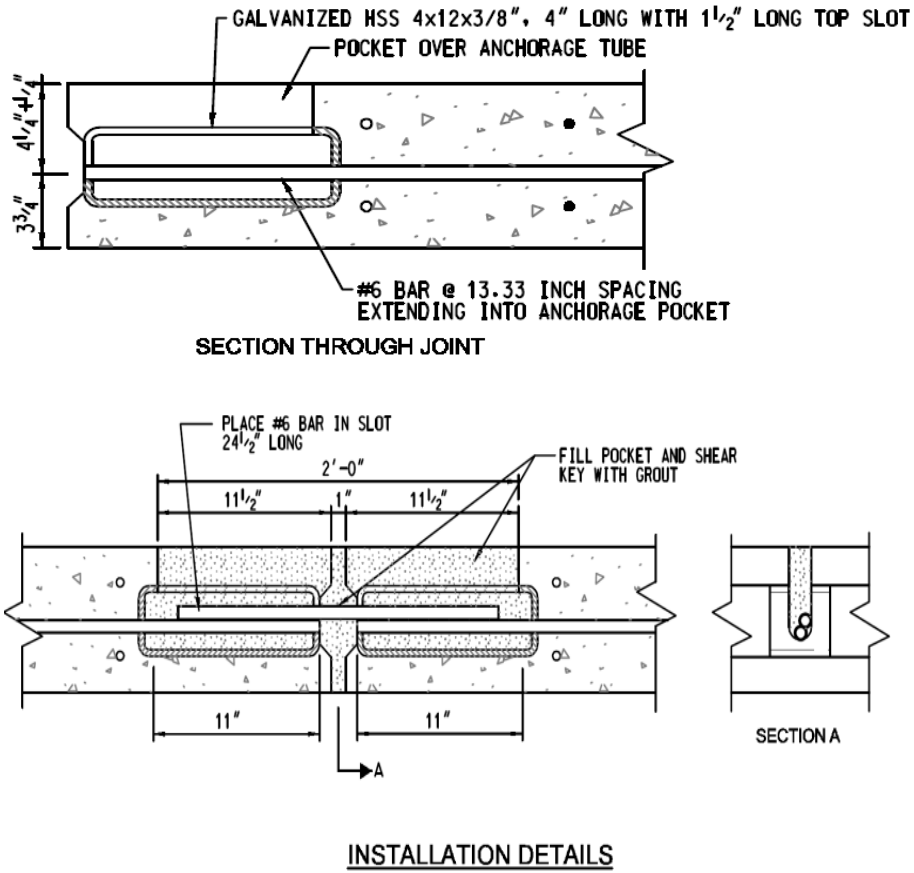 Source: FHWA Connection Manual	Implemented projects: Live Oak Creek Bridge, TX First use of the details developed and tested under NCHRP Project 12-65. Longitudinal **post-tensioning is not required** to connect the deck panels in the field. Short reinforcing bars are placed in reinforced blockouts and grouted in place. **Designed to transmit shear and moment ?** Q: How to achieve moment transfer without precompression or adequate moment arm? **Challenges:** Selecting a non-shrink grout to fill a 2 ft wide pocket.

FULL-DEPTH DECK PANELS

Panel-to-panel transverse connection

Rank	Joint details	Description/Comments
1	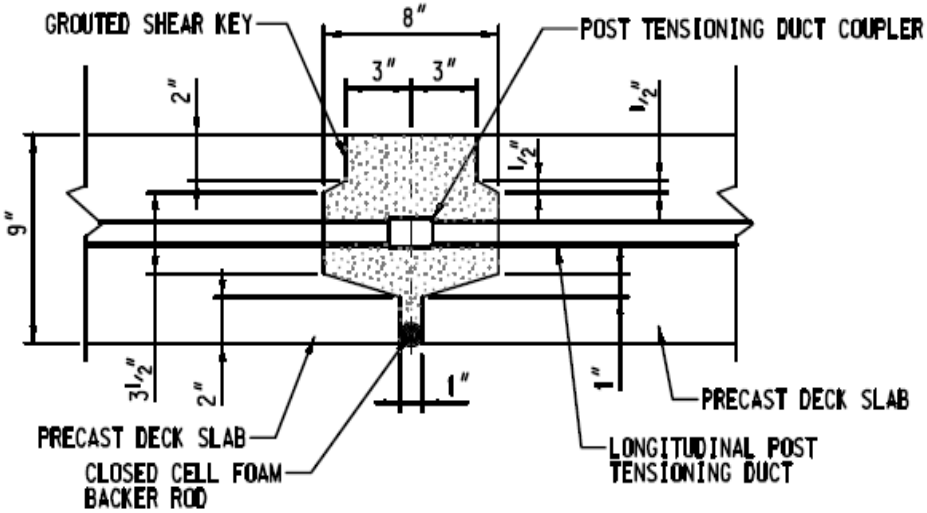 TRANSVERSE JOINT DETAILS Source: FHWA Connection Manual	Implemented projects: Replacement of I-287 Viaduct over the Bronx River Parkway, NY Grouted shear key with longitudinal post-tensioning. **Designed to transmit shear and moment with proper PT application.** **Challenges:** Use of non-shrink neat grout to achieve high early strength because, most of the time, fill depth or width is a controlling factor in selecting grout material. Note: Performance data may be available with respective DOTs.

FULL-DEPTH DECK PANELS

Panel-to-panel transverse connection

Rank	Joint details	Description/Comments
1	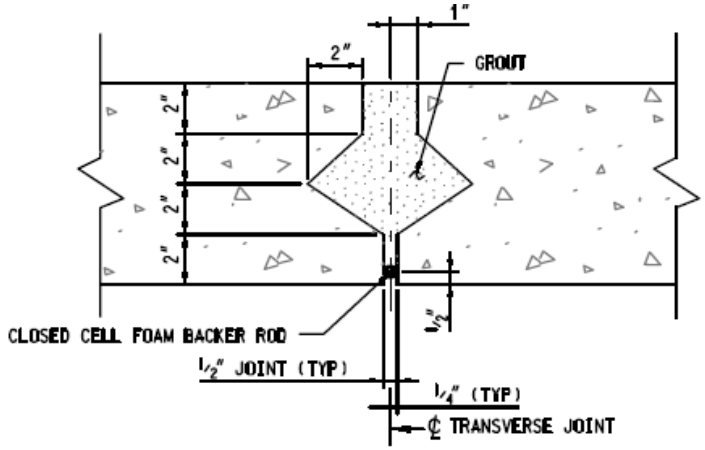 Detail 1 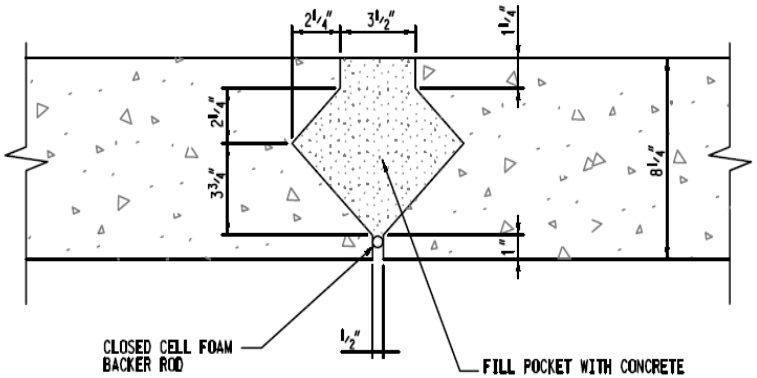 Detail 2 (**Recommended**) Source: FHWA Connection Manual Note: Performance data may be available with respective DOTs.	Implemented projects: Washington State DOT, US 101 - Nolan Creek Vic. Bridge. Iowa DOT, Boone County IBRC Project over Squaw Creek. Diamond shaped shear key is filled with an early high strength, low shrinkage concrete mix. Extended non-shrink grout can be used to fill the joint. Transverse joints were later compressed using longitudinal post-tensioning of the bridge deck. **Designed to transmit shear and moment with proper PT application.** **Challenges:** Use of non-shrink neat grout to achieve high early strength because, most of the time, fill depth is a controlling factor in selecting grout material.

FULL-DEPTH DECK PANEL

Deck level longitudinal connection (closure)

FULL-DEPTH DECK PANELS

Panel-to-panel longitudinal connection (closure)

Rank	Joint details	Description/Comments
1	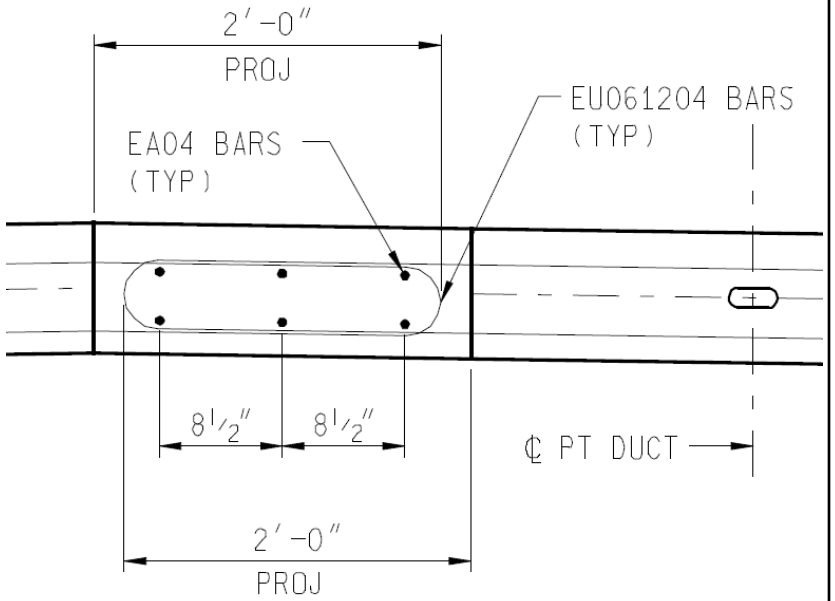 Note: The detail has been used for a long period; hence, performance data is available.	Implemented projects: Route 8 Viaduct, Seymour, CT. Parkview Ave over US-131, Kalamazoo, MI. Connection was used to account for the crown of the bridge deck. High early strength concrete is commonly used. Useful for staged construction. Designed to transmit shear and moment. **Challenges:** Spacing issues related to closure details are documented. Minimize the impact of vibration during staged construction *(hydrated cementitious material bond breaks when subjected to vibration after initial setting)*. Minimize shrinkage cracking.

FULL-DEPTH DECK PANELS

Panel-to-panel longitudinal connection (closure)

Rank	Joint details	Description/Comments
1	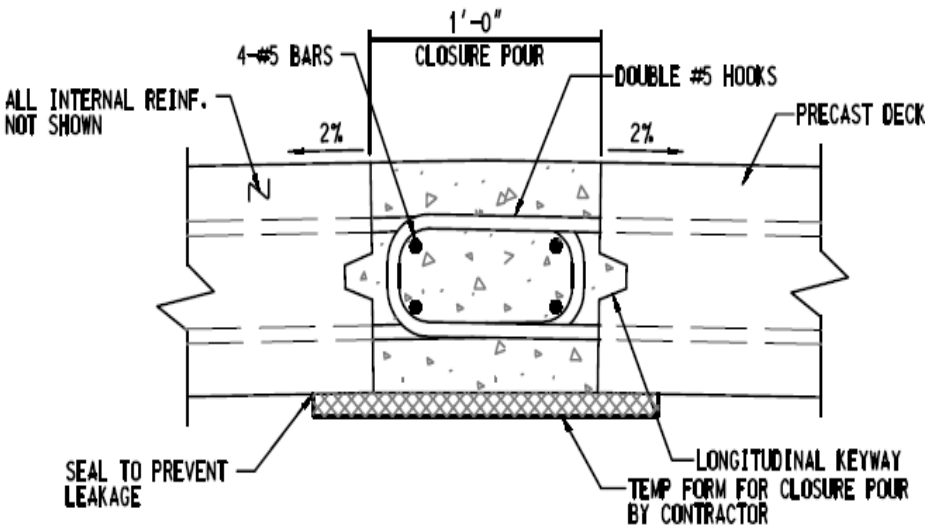 Note: Performance data might be available at the respective DOT.	Implemented projects: Boone County IBRC Project over Squaw Creek, IA Connections was established by using a reinforced concrete closure pour and high-early-strength non-shrink concrete. Designed to transmit moment and shear. **Challenges:** Spacing issues related to closure details are documented. Minimize the impact of vibration during staged construction *(hydrated cementitious material bond breaks when subjected to vibration after initial setting)*. Minimize shrinkage cracking.

FULL-DEPTH DECK PANELS

Panel-to-panel longitudinal connection (closure)

Rank	Joint details	Description/Comments
3	 Note: the figure shown is not a full-depth deck panel. It is a prefabricated module of steel girders and a precast panel used in MassDOT Fast 14 project. The figure shown here is only to present the concept.	Use of threaded inserts with straight steel secured at the site is an option to eliminate space issues while placing the precast elements. Benefits should be justified with the time and effort Formwork supports can be attached to the panels to reduce construction time Connection is designed to transmit shear and moment **Detail is <u>not yet implemented</u> with full-depth deck panels.** **Challenges:** Threading a large number of steel bars at the filed. Minimize the impact of vibration during staged construction *(hydrated cementitious material bond breaks when subjected to vibration after initial setting)*. Minimize shrinkage cracking.

FULL-DEPTH DECK PANEL

Deck-to-girder connection
(shear connection and haunch)

FULL-DEPTH DECK PANELS

Deck panel-to-steel girder connection

Rank	Joint details	Description/Comments
1		Implemented projects: a) I-84/Route 8 Interchange, Waterbury, CT b) US 101 - Nolan Creek Vic. Bridge, WA c) Replacement of I-287 Viaduct over the Bronx River Parkway, NY
a)	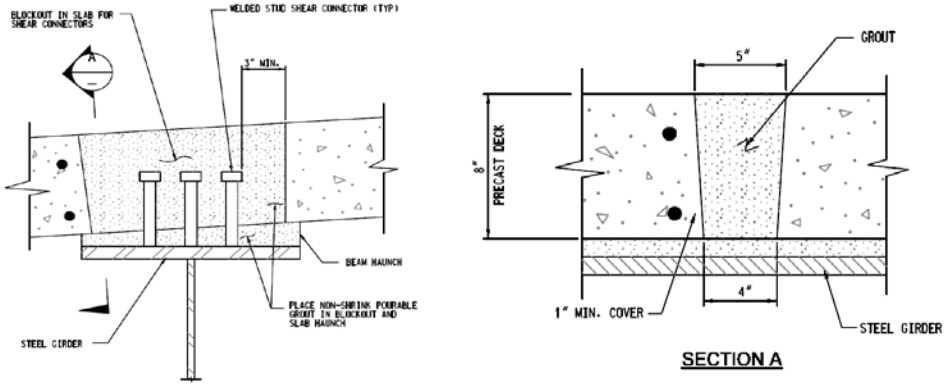	Spacing of blockouts is usually kept to 24“ to 30” on center. Blockouts have been built with both rounded and square corners.
b)	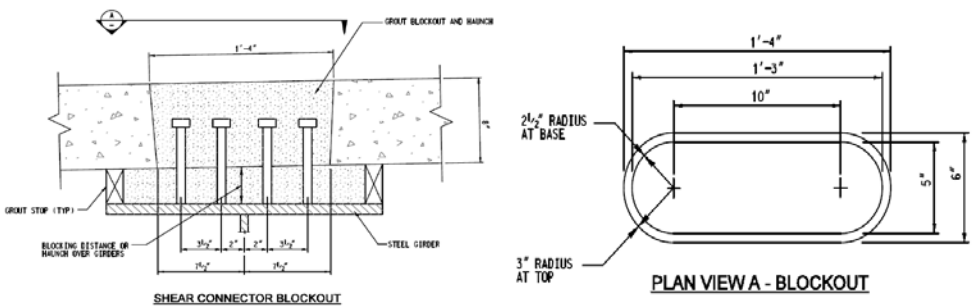	Rounded corners are preferred in order to minimize cracking potential. Rounded corners minimize the potential for grout voids. Designed to transmit shear.
c)	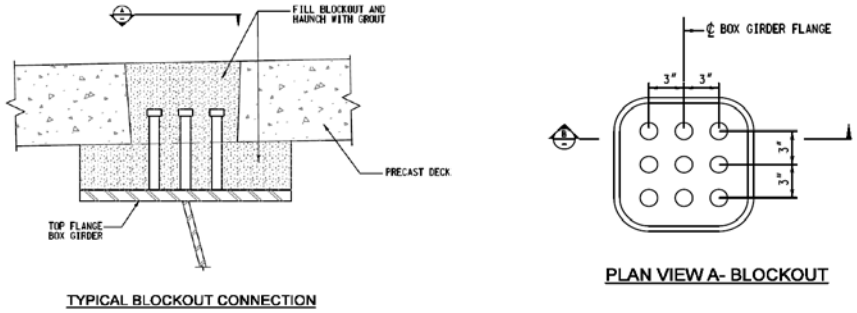	**Challenges:** Leak proof formwork. Non-shrink neat grout for large voids. Performance data might be available at the respective DOTs.

Source: FHWA Connection Manual

FULL-DEPTH DECK PANELS

Deck panel-to-prestressed concrete girder connection

Rank	Joint details	Description/Comments
2	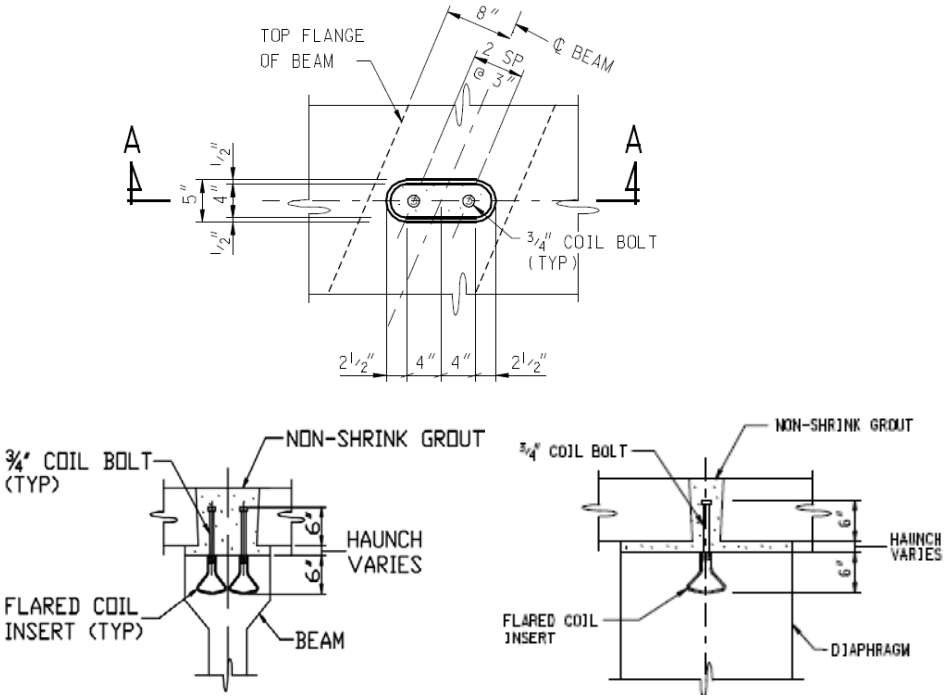 Photo courtesy: MDOT	Implemented projects: Parkview Avenue over US-131, MI Typical spacing of blockouts is 23” on center. Designed to transmit shear. **Challenges:** Leak proof formwork. Tolerance issues for installation of coil bolts due to girder sweep. Performance data might be available at the respective DOTs.

FULL-DEPTH DECK PANELS

Deck panel-to-prestressed concrete girder connection

Rank	Joint details	Description/Comments
2	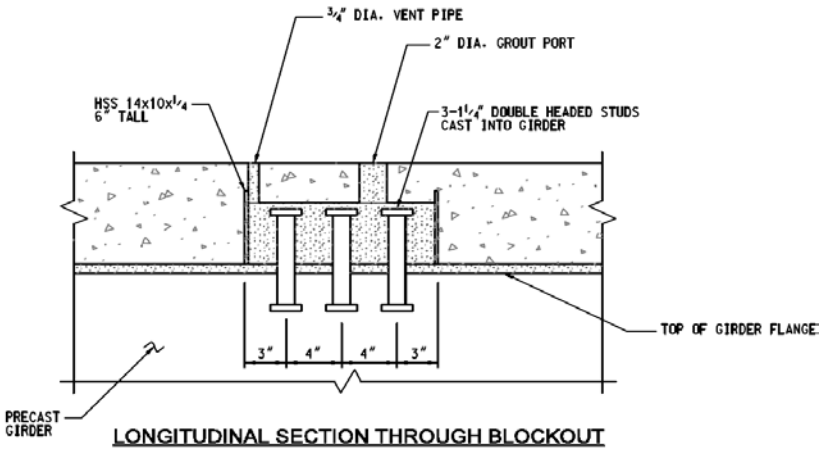 LONGITUDINAL SECTION THROUGH BLOCKOUT 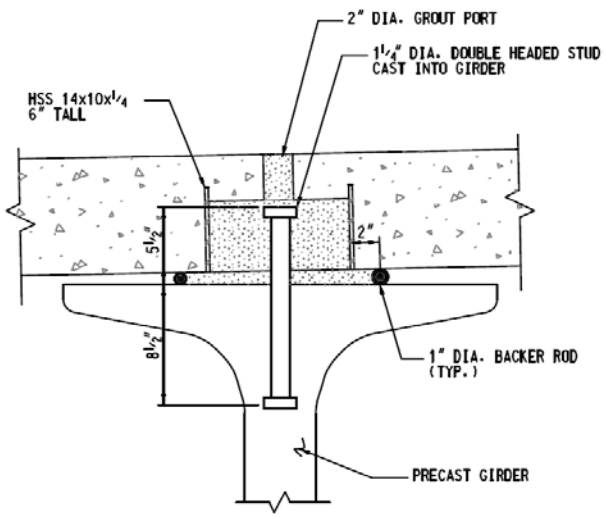 BLIND BLOCKOUT DECK CONNECTION Source: FHWA Connection Manual	Implemented projects: Live Oak Creek Bridge, TX Spacing of the blockouts is kept at 4 ft on center. This detail in not commonly used; hence, needs performance evaluation. Minimum exposure to ambient conditions. Designed to transmit shear. **Challenges:** Prevent voids in the grouted connection. Leak proof formwork. Limited use. Performance data might be available at the respective DOT.

PREFABRICATED SUPERSTRUCTURE MODULES

Decked Bulb Tee
Girder-to-girder connection

PREFABRICATED SUPERSTRUCTURE MODULES

DBT girder-to-girder connection

Rank	Joint details	Description/Comments
1	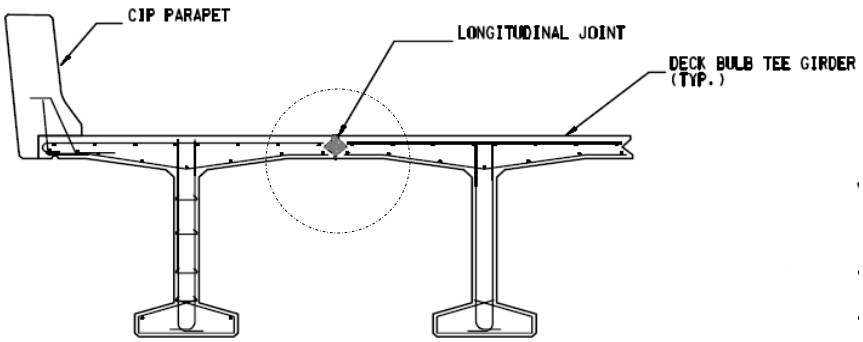 TYPICAL SECTION 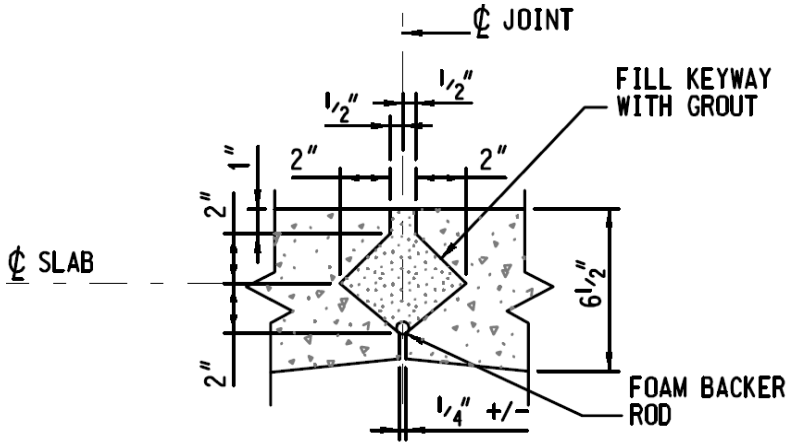 FLANGE SECTION THROUGH LONGITUDINAL JOINT Source: FHWA Connection Manual	Commonly used in Washington State Girder types include: a) Double tee beams b) Triple Tee (Ribbed) Beams c) Deck Bulb Tees The welded connections are spaced at maximum of 5 feet on center. Durability is a concern because the joint is not designed to transfer moment Designed to transmit shear. 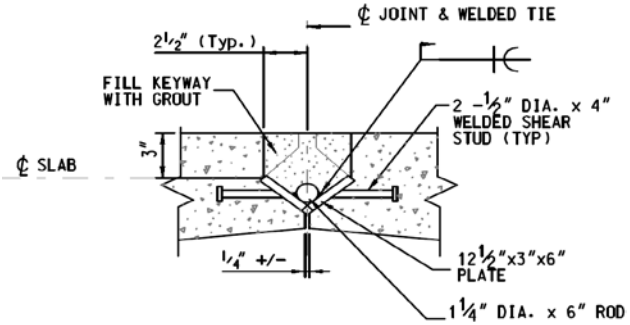 FLANGE SECTION AT WELDED TIE **Any detail that does not carry shear and flexure without cracking under service loads is not suitable for states like MI.**

PREFABRICATED SUPERSTRUCTURE MODULES

DBT girder-to-girder connection

Rank	Joint details	Description/Comments
1	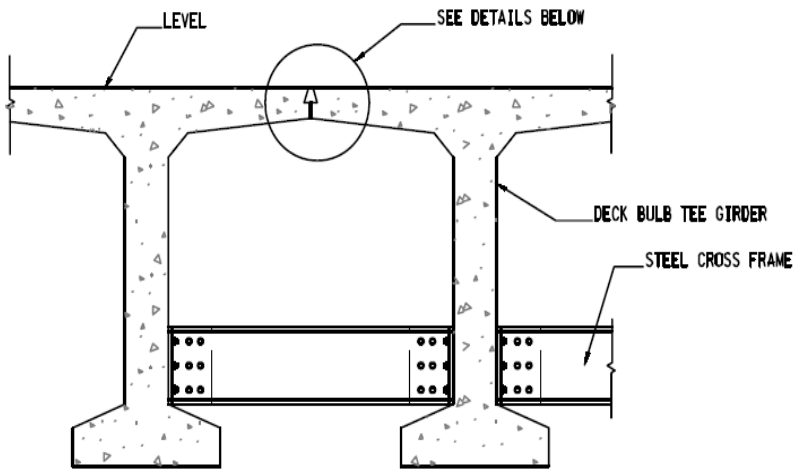 TYPICAL DECK BULB TEE DETAILS 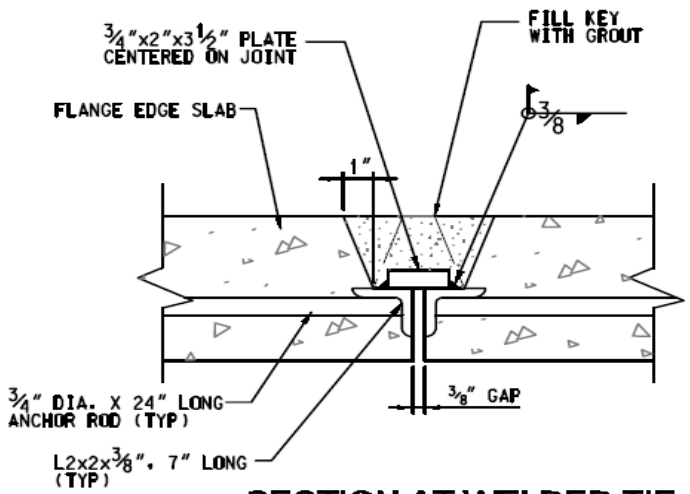 SECTION AT WELDED TIE	Bridge over middle Fork Crazy Woman Creek, WY The welded connection is spaced at approximately 6 foot intervals. Designed to transmit shear 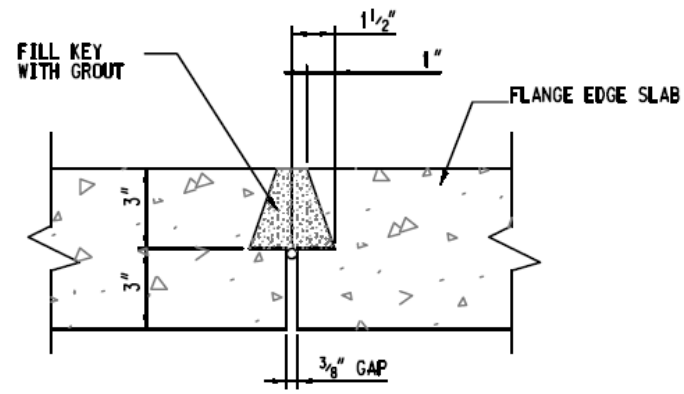 SECTION ALONG LONGITUDINAL JOINT Source: FHWA Connection Manual

PREFABRICATED SUPERSTRUCTURE MODULES

Tee Girder connections

PREFABRICATED SUPERSTRUCTURE MODULES
Double tee girder-to-girder connection

Rank	Joint details	Description/Comments
1	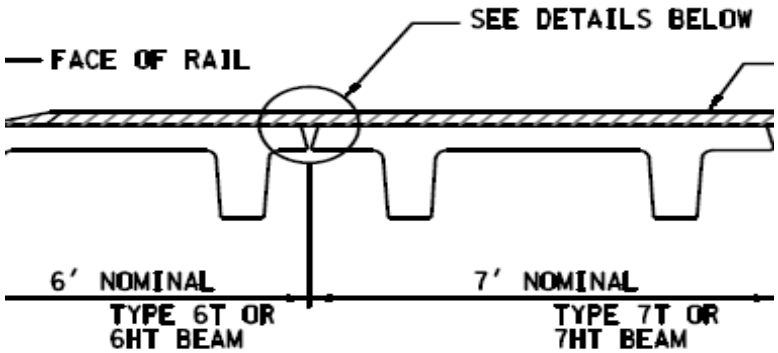 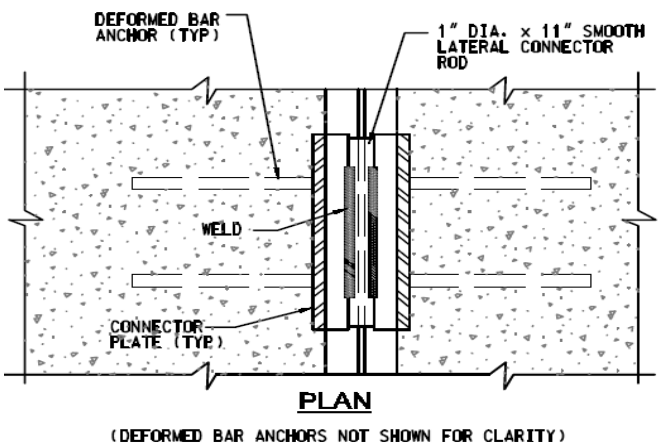 Source: FHWA Connection Manual	Commonly used in Texas State These connectors are spaced 5 feet on center along the entire length of the beam. Designed to transmit shear 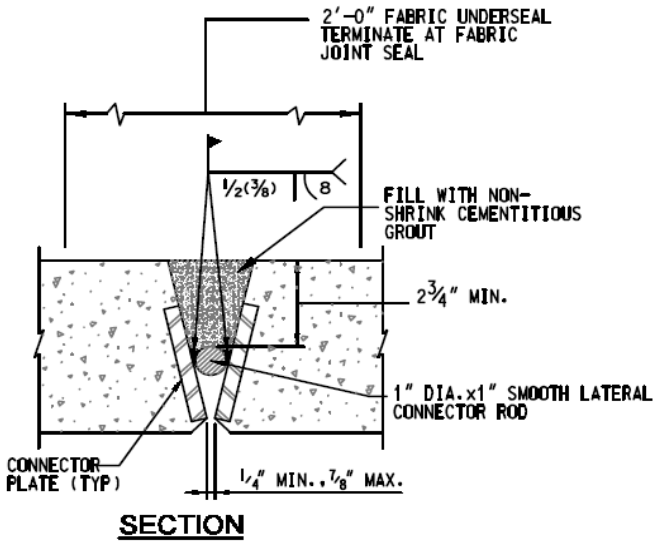

PREFABRICATED SUPERSTRUCTURE MODULES

Side-by-side box-beam

PREFABRICATED SUPERSTRUCTURE MODULES

Side-by-side box-beam: longitudinal connection

Rank	Joint details	Description/Comments
1	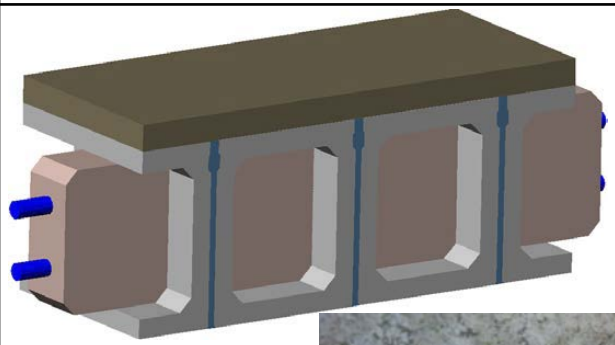 Cracks observed on Oakland over I-94 on June 21, 2007 (before opening to traffic) Analysis and design procedures are given in Attanayake and Aktan (2009) - TRB09-3420. Analysis and design procedures presented in the paper are applicable to most of the modular systems currently used in ABC.	Implemented project: A large number of projects in Michigan and other states. Michigan DOT transverse connection include full-depth grouted shear-keys, transverse post-tensioning, and a 6 in. cast-in-place concrete deck. Deck is placed after post-tensioning the girders. Reflective deck cracking has been observed even before opening to traffic. Durability is a concern in states like Michigan. Staged post-tension through top and bottom flanges with spacing requirements similar to full-depth deck panels need to be considered for enhanced durability.

PREFABRICATED SUPERSTRUCTURE MODULES

Decked steel girder system: longitudinal connection

Rank	Joint details	Description/Comments
2		Implemented in the MassDOT Fast 14 project. Designed to transmit moment and shear. Once the units were placed, longitudinal joints were formed with field cast high early strength concrete. Specialty closure pour concrete needed immediate curing and protection. Polyethylene covering was used to keep the moisture. A MassDOT requirement was to produce a concrete mix of 2000 psi strength within 4 hours. Performance data will be available in near future.

PREFABRICATED SUPERSTRUCTURE MODULES

Decked steel girder system: longitudinal connection

Rank	Joint details	Description/Comments
2	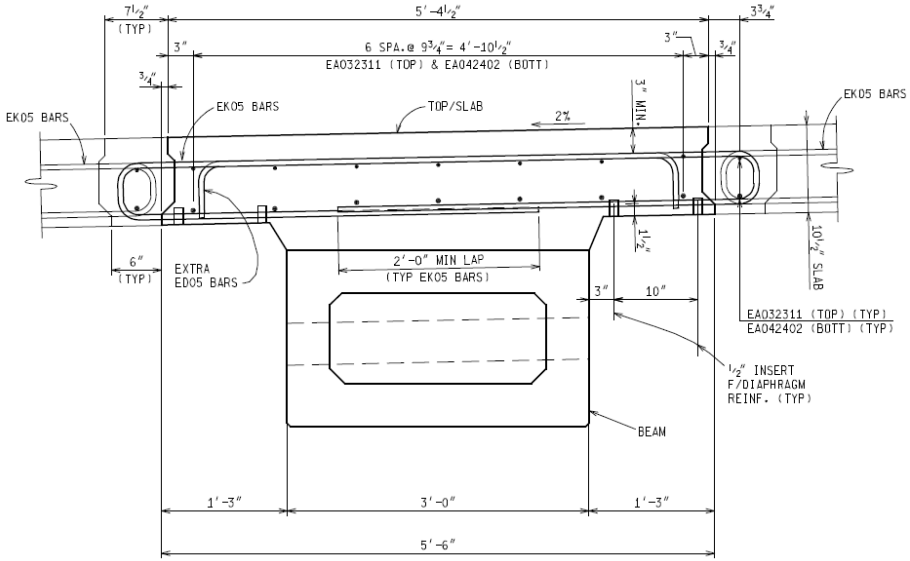	Implemented Project: M-25 crossing over the White River, MI. Designed to transmit moment and shear. Longitudinal closure was cast after post-tensioning the superstructure through the diaphragms. So, the longitudinal joint is not compressed. Performance data will be available in near future.

CONTINUITY DETAIL OVER PIER OR BENT

CONTINUITY DETAIL AT PIER

Rank	Joint details	Description/Comments
2	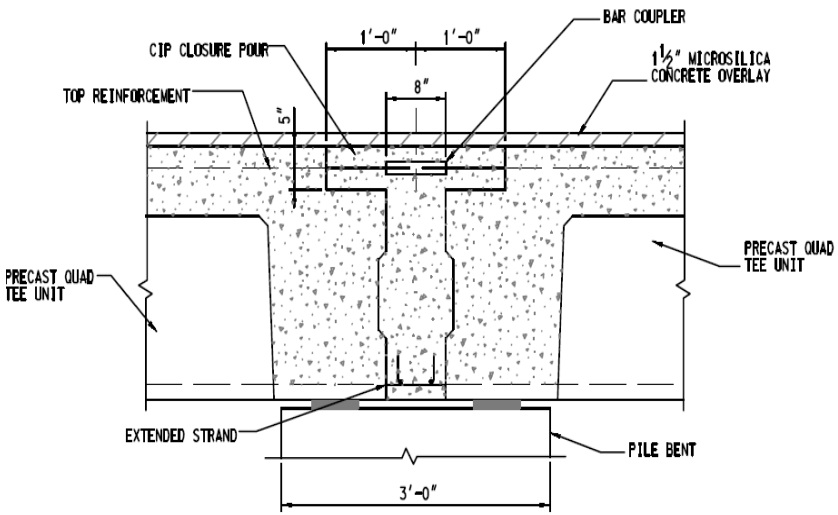 CONTINUITY CONECTION AT PIER Source: FHWA Connection Manual	Implemented project: NYDOT, Robert Moses Causeway Bridge Rehabilitation over Great South Bay. Precast quad tee beam superstructure is made continuous for live load. Connecting these units together longitudinally is made with a rebar coupler at the top and overlapping mild steel at the bottom (similar to standard AASHTO I-girders). Designed to provide force and moment continuity.

CONTINUITY DETAIL AT PIER

Rank	Joint details	Description/Comments
2	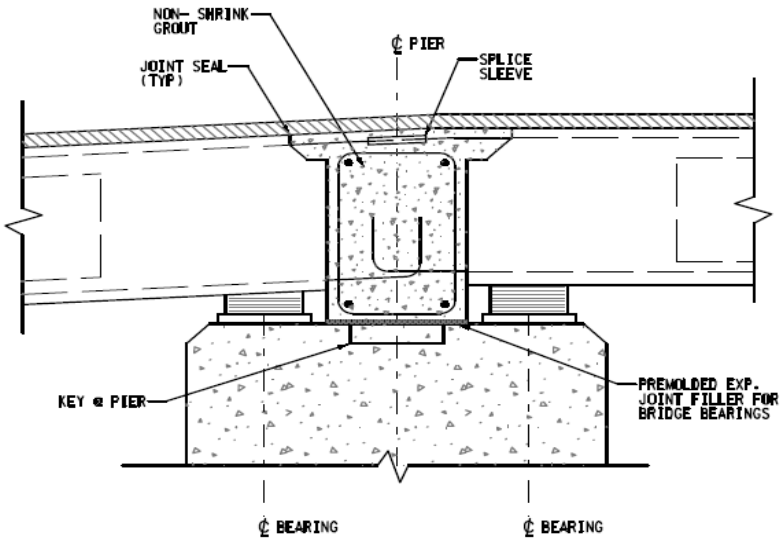 SECTION THROUGH PRECAST BOX BEAM CONNECTION 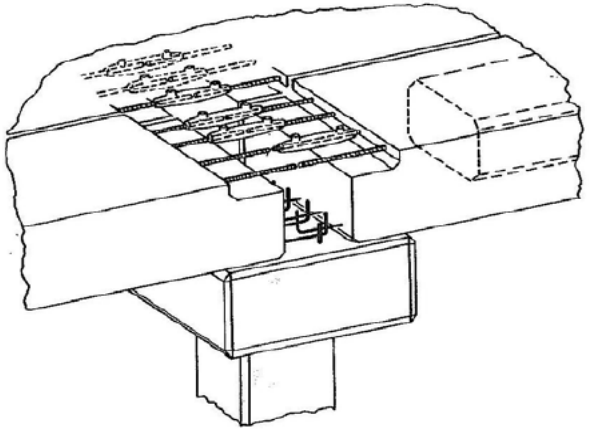	Implemented project: Unquowa Road, Fairfield, CT. Splice sleeves were used that could be slid to one side and then slid into position after beam placement. Designed to provide force and moment continuity. Source: FHWA Connection Manual

LINK SLABS

- Detailing over piers (negative moment continuity)

Link slab has already been implemented with ABC

LINK SLABS

- Detailing over piers (negative moment continuity)

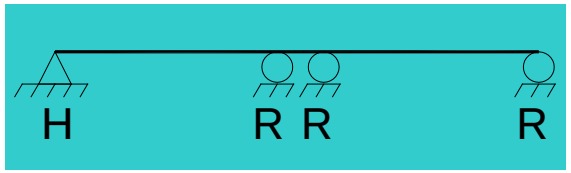

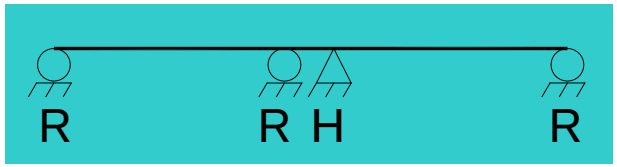

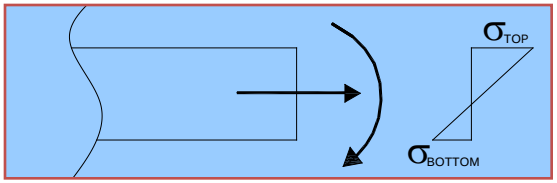

Bottom fiber under compression (resultant force is in tension)

Live, thermal gradient, and uniform thermal loads need to considered

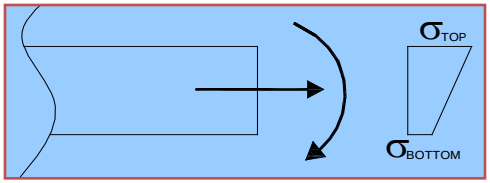

Combined bending and tension

Bearing arrangement should be critically reviewed

LINK SLABS

- Detailing over piers (negative moment continuity)

1. Combined effect of live and thermal gradient loads should be considered for link slab design.
2. Link slab should be designed considering flexural interaction with axial loads for RHHR support configuration.
3. Both top and bottom layer reinforcement should be continued.

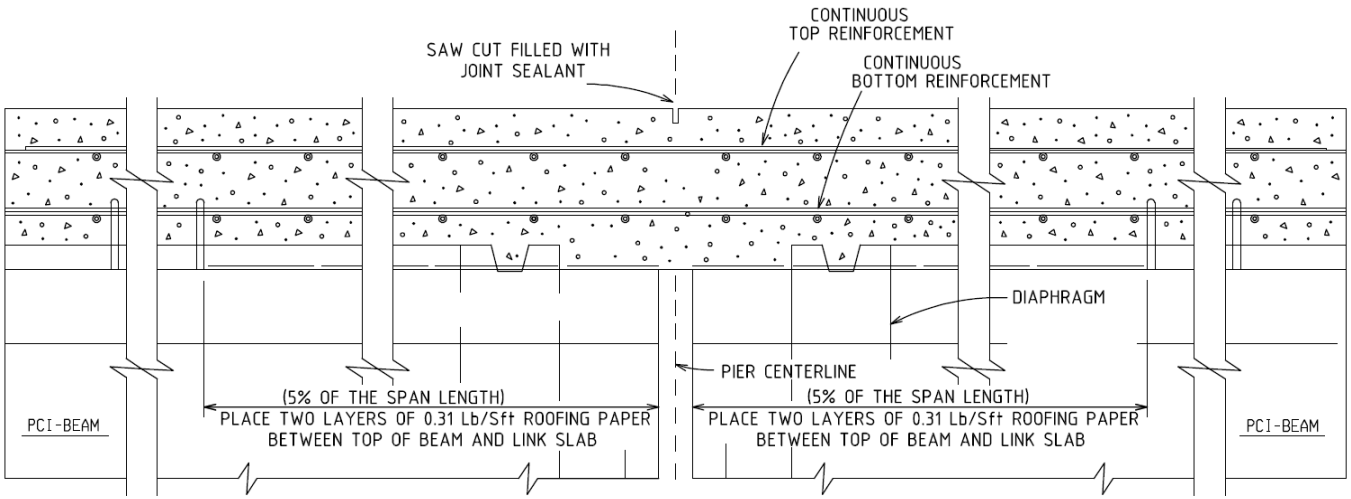

4. Link-slab analysis and design procedures explained in TRB paper 09-3577 is recommended.

CONTINUITY DETAIL AT THE ABUTMENT

CONTINUITY DETAIL AT ABUTMENT

SEMI-INTEGRAL ABUTMENT

Rank	Joint details	Description/Comments
	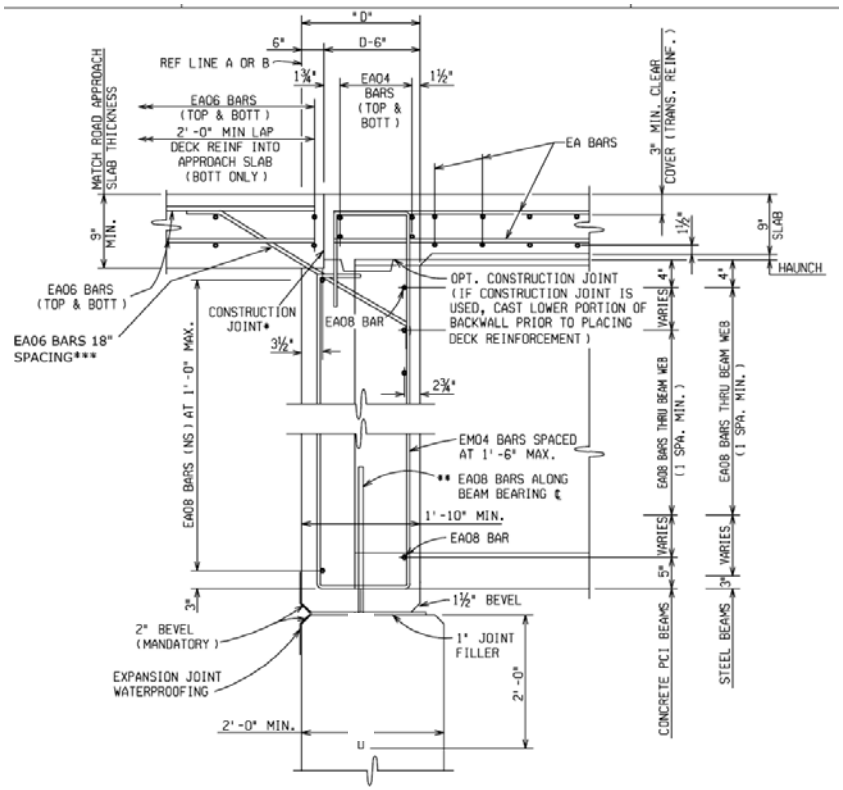 Source: Aktan, Attanayake, and Ulku (2008) (MDOT RC-1514)	Implemented projects: Friction between backwall and abutment may be a concern. Fit-in tolerance can be an issue if the backwall is prefabricated with the girder. **Only used with integral abutment bridges

CONTINUITY DETAIL AT ABUTMENT

SEMI-INTEGRAL ABUTMENT

Rank	Joint details	Description/Comments
	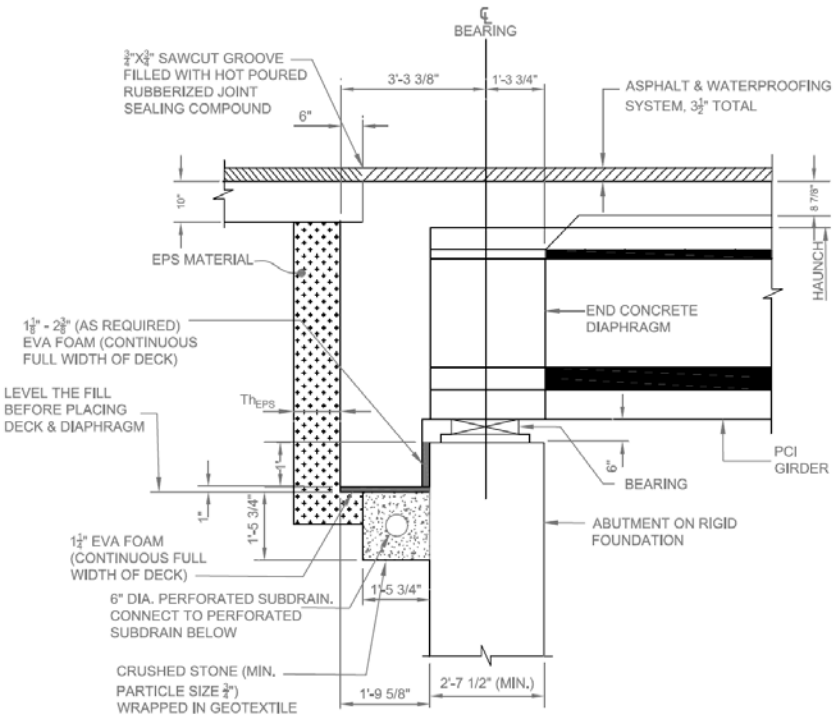 Source: Aktan and Attanayake (2011) MDOT RC-1563	Implemented projects: Do not require tighter tolerances Superstructure is isolated from the substructure Bearing can be maintained and replaced as needed

SUBSTRUCTURE CONNECTIONS

PIER CONNECTIONS

Precast pier cap to round CIP piles

Rank	Joint details	Description/Comments
2	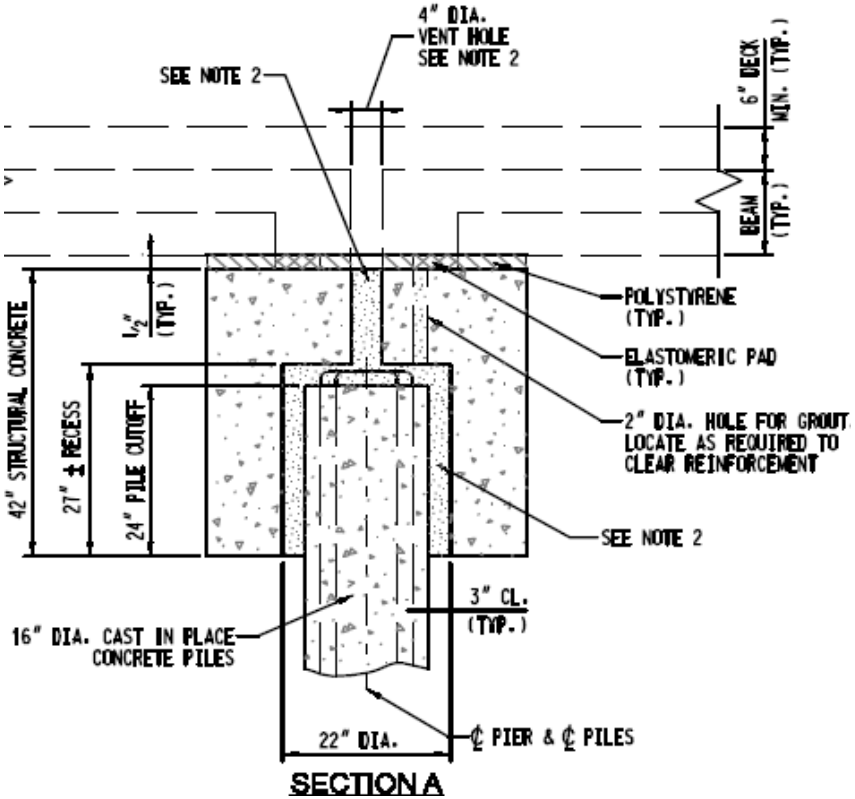 Source: FHWA Connection Manual	Implemented projects: Bridge 13004, TH 8 over Center Lake Channel, Center City, MN Cap was precast with oversized holes for piles, and smaller holes between pile blockouts and top of cap were included for grouting After piles were installed, the cap was placed over piles, leveled into position, and high-strength grout injected from top of cap through grouting holes. Rebar inside the CIP piles projected into the pier cap for additional bonding. Designed to transmit shear and compression

PIER CONNECTIONS

Precast pier cap to precast concrete piles

Rank	Joint details	Description/Comments
1	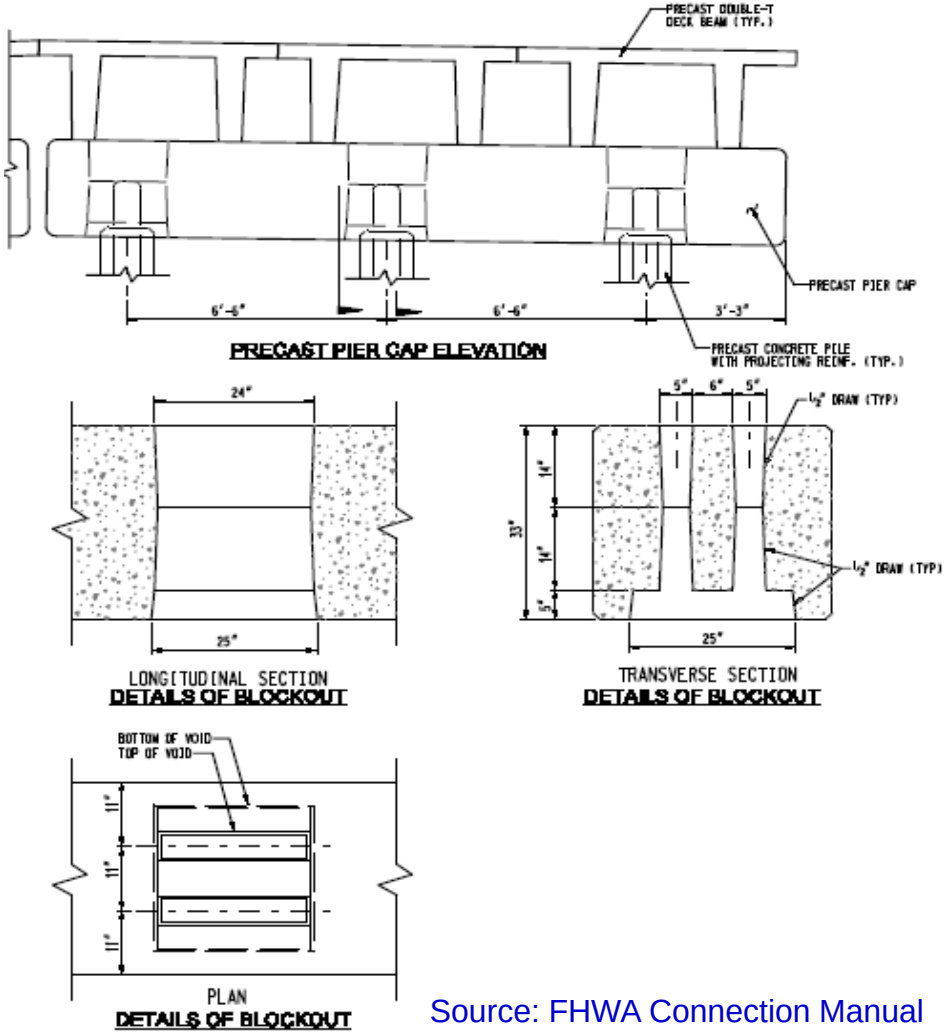 Source: FHWA Connection Manual	Implemented project: Redfish Bay, TX Designed to transmit shear, moment, compression, tension and torsion.

PIER CONNECTIONS

Precast pier cap to CIP concrete columns

Rank	Joint details	Description/Comments
1	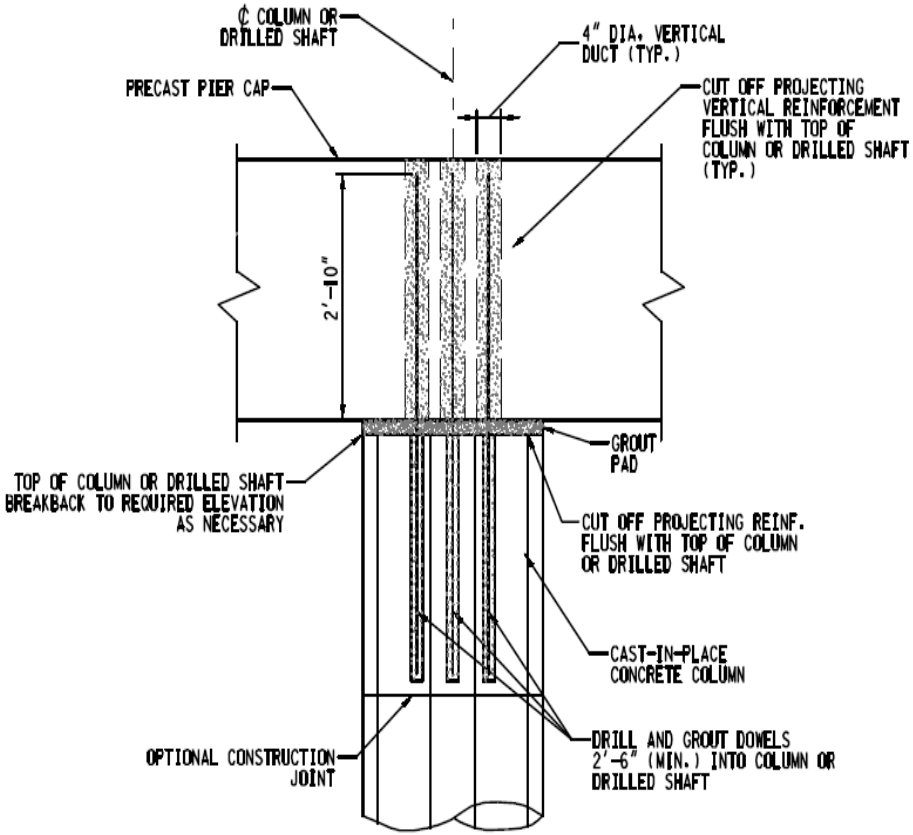 SECTION THROUGH PIER CAP AND COLUMN Source: FHWA Connection Manual	Commonly used in Texas The contractor used shims to set the grades of the caps. The ducts run from the bottom to a point near the top of the cap. This was done to avoid interference with the large amount of top reinforcing in the cap. The ducts are standard post-tensioning ducts. Designed to transmit shear, moment, compression, tension and torsion.

PIER CONNECTIONS

Precast bent cap to CIP concrete column

Rank	Joint details	Description/Comments
2	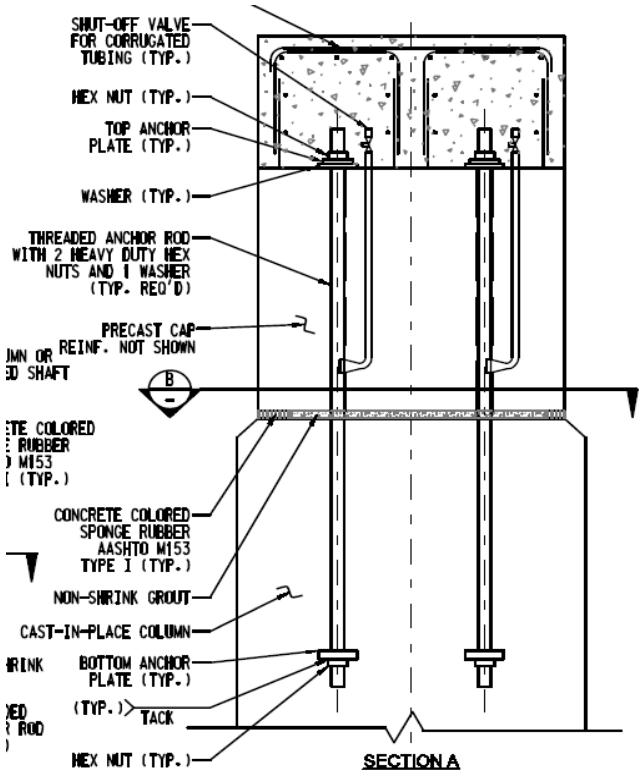 Source: FHWA Connection Manual	Implemented project: Bridge over BNSF Railroad (Wyoming Drawing Number 7024), Wyoming Designed to transmit shear, moment and compression

PIER CONNECTIONS

Precast bent cap or pile cap to pre-stressed concrete column or pile

Rank	Joint details	Description/Comments
1	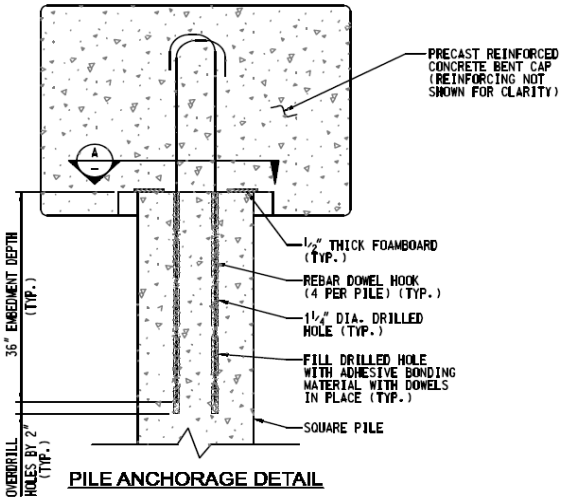 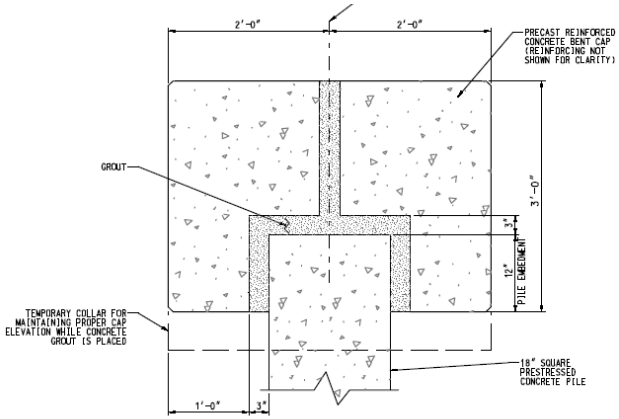 Source: FHWA Connection Manual	Implemented projects: Carolina Bays Parkway, South Carolina DOT Conway bypass, South Carolina DOT Designed to transmit shear, moment and compression

PIER CONNECTIONS

Precast pier column to precast pier cap

Rank	Joint details	Description/Comments
2	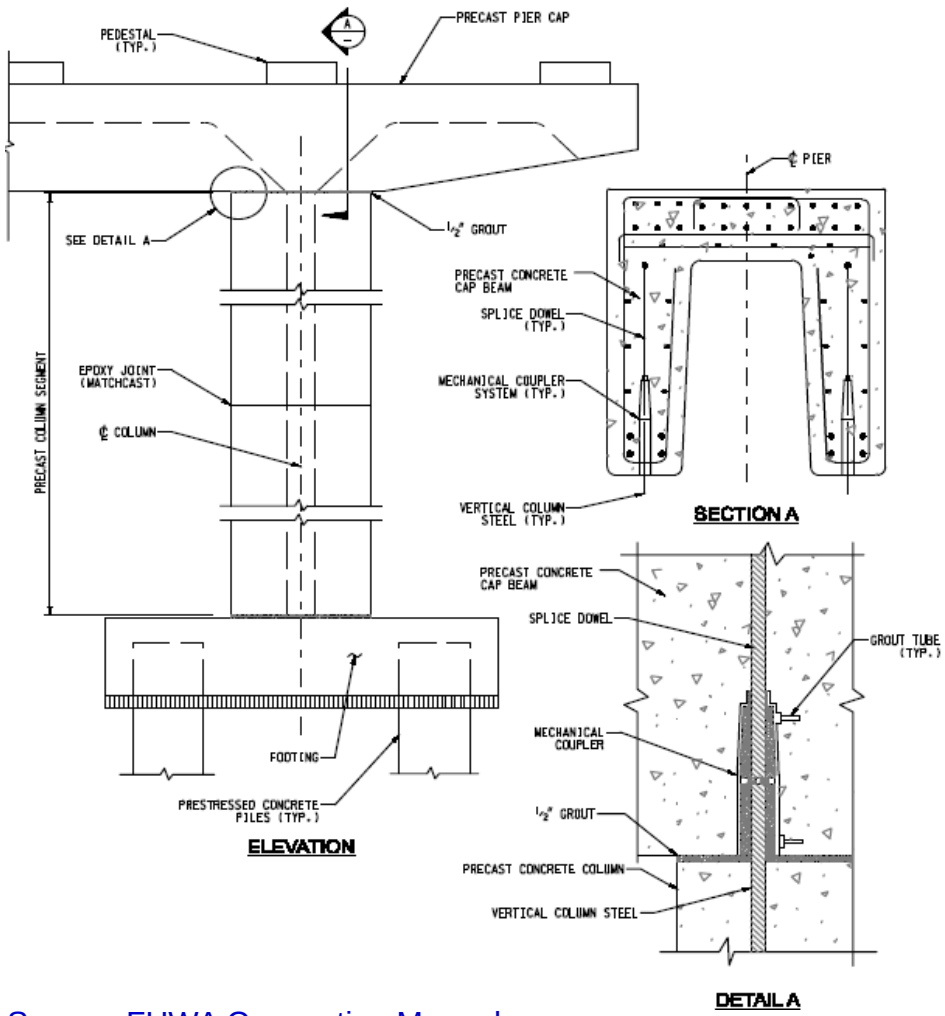 Source: FHWA Connection Manual	Implemented project: Edison Bridge, Florida Steel grouted reinforcing bar splicer system was used. The splicers can be oversized to accommodate approximately 1/2" of tolerance. The only design effect is that the bars must be moved closer to the center of the members in order to maintain cover around the splicers (approx. 1"). The design incorporates an H-shaped column section and a U shaped cap section to reduce weight. Designed to transmit shear, moment, compression, tension and torsion.

PIER CONNECTIONS

Precast pier column to CIP footing

Rank	Joint details	Description/Comments
2	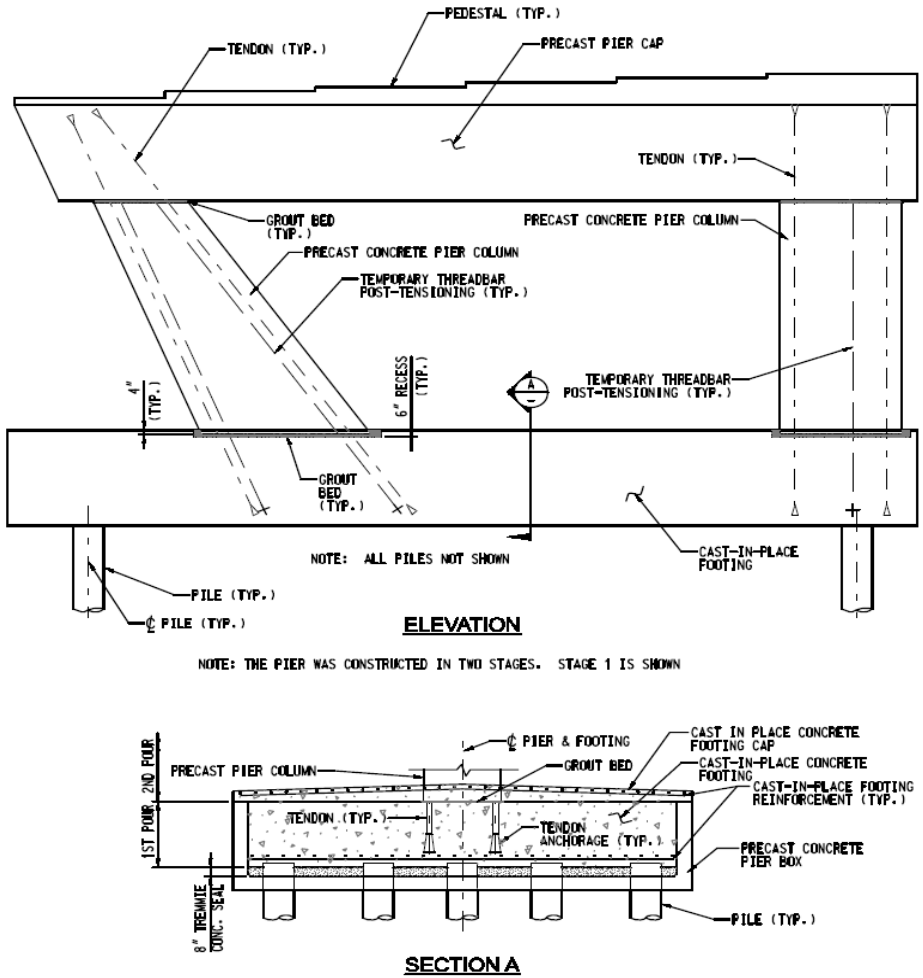 Source: FHWA Connection Manual	Implemented project: Route 70 over Manasquan River, Brielle, NJ The project was designed with Inclined columns with a trumpet shaped anchorages, which allowed strand to be placed and grouted after the column has been erected. All post-tensioning was accomplished with threaded post-tension bars in place of the strand tendons. Once the precast cap beam was installed, the cap was sealed with a cast-in-place concrete cap. Designed to transmit shear, moment, compression, tension and torsion.

PIER CONNECTIONS

Pre-stressed concrete cylinder pile to Precast pile cap

Rank	Joint details	Description/Comments
1	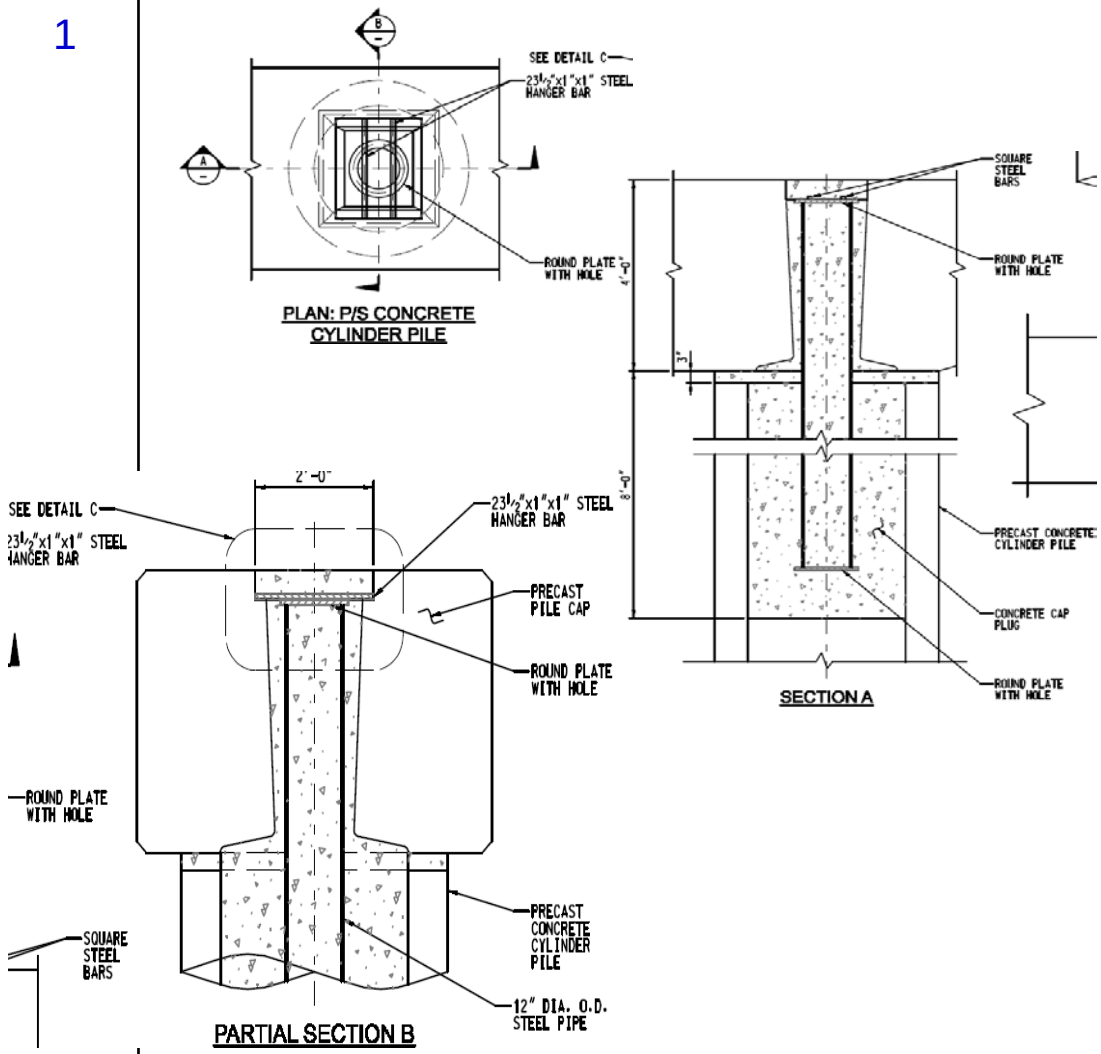	Implemented project: St George Island Bridge, Florida Water hammer problem on cylinder piles. Concrete spalling at joints between cylinder segments Designed to transmit shear, moment and compression Source: FHWA Connection Manual

PIER CONNECTIONS

Precast pier cap to precast piles

Rank	Joint details	Description/Comments
2	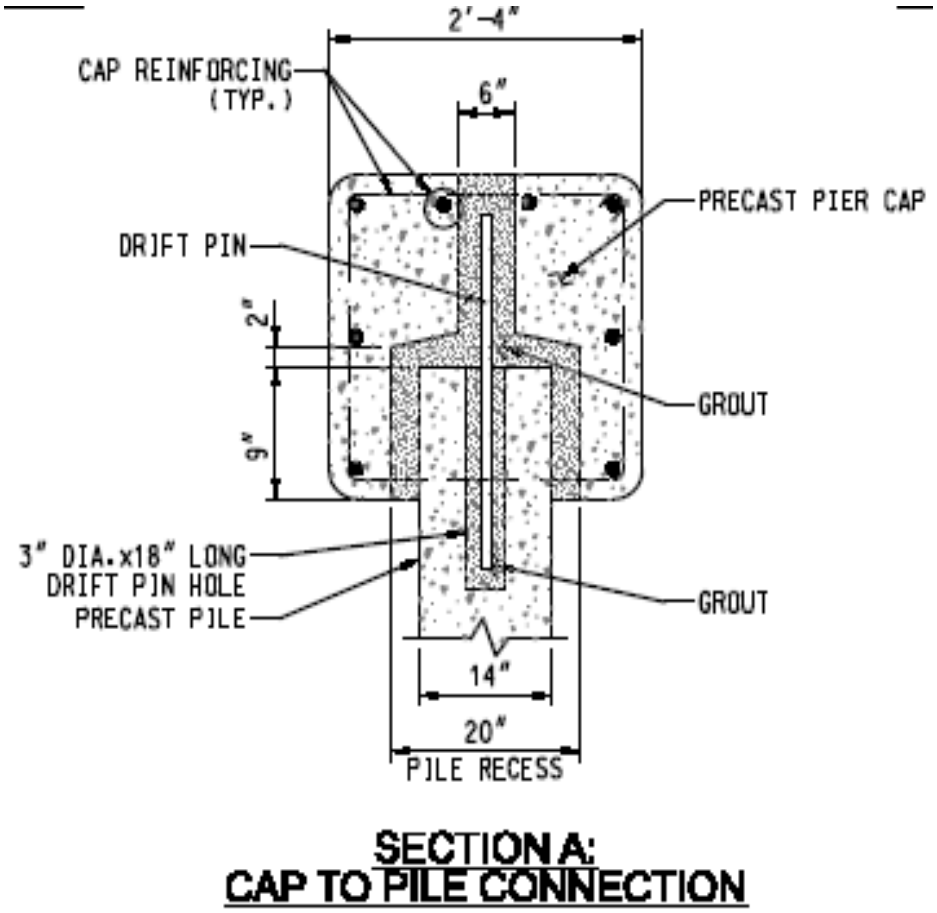 Source: FHWA Connection Manual	Implemented project: Louisiana Forest Highway Kisatchie National Forest Clear Creek Bridge The pier to pile connection is designed as a pinned connection that transfers lateral forces and axial compression.

PIER CONNECTIONS

Precast concrete pier column to precast concrete pier column

Rank	Joint details	Description/Comments
1	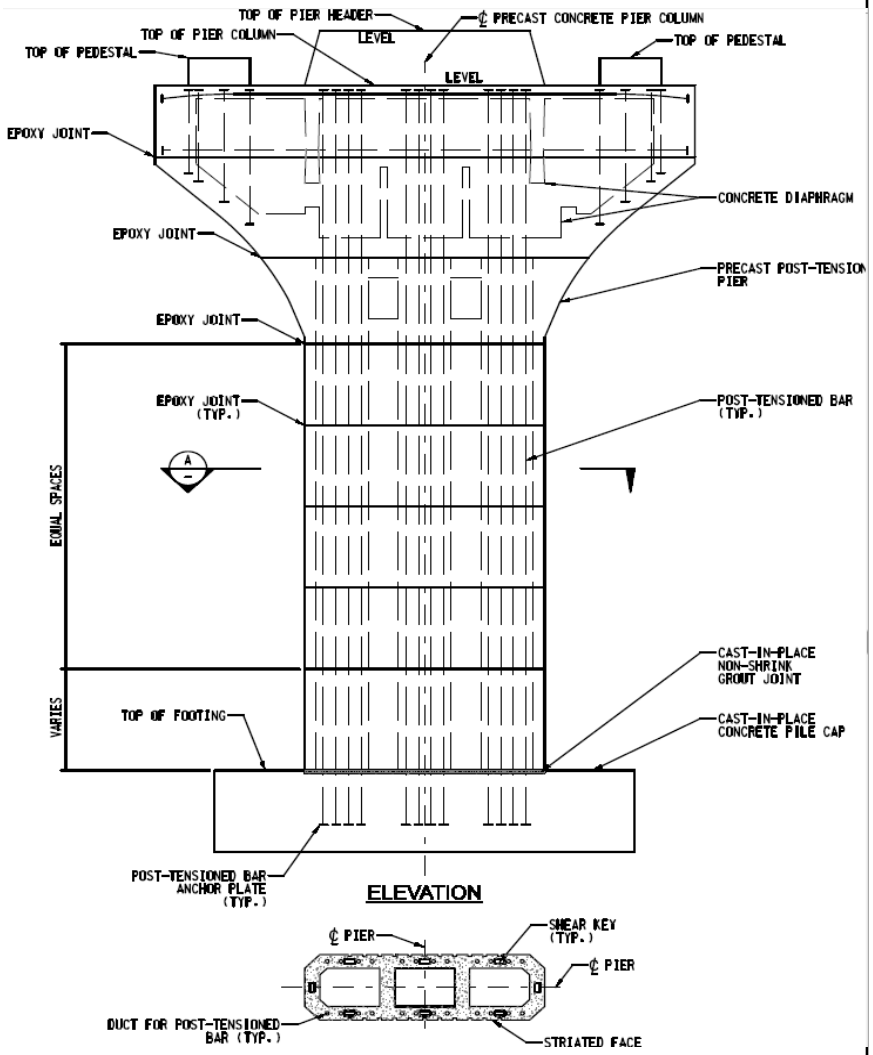	Implemented project: Replacement of I-287 Viaduct over the Saw Mill River Parkway, NY Joints were sealed and bonded with epoxy adhesive. Shear was transferred between pieces by means of shear keys in the precast pieces. Post-tension rods were embedded in the cast in place footing and spliced with couplers at several levels. After the installation of all segments, the entire pier was post-tensioned. Designed to transmit shear, moment and compression Source: FHWA Connection Manual

PIER CONNECTIONS

Precast cap beam to precast pier column

Rank	Joint details	Description/Comments
1	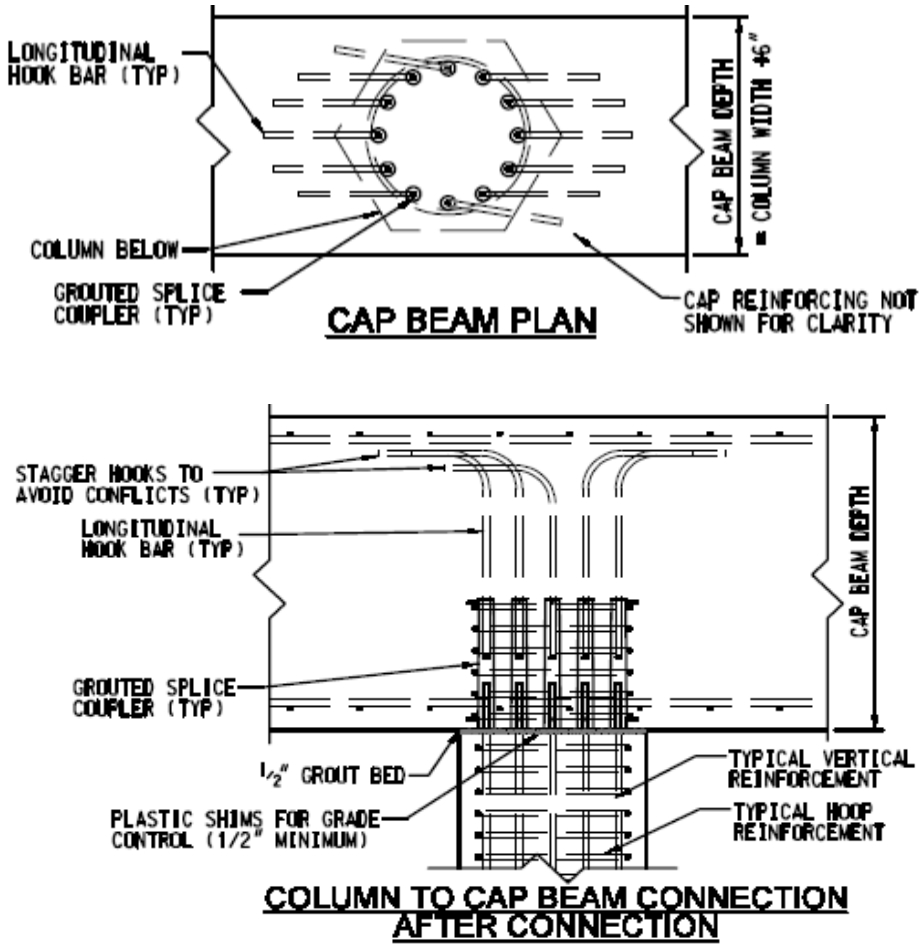 Source: FHWA Connection Manual	Implemented in Utah State Designed to transmit shear, moment, compression, and torsion.

PIER CONNECTIONS

Precast pier column to precast pier column

Rank	Joint details	Description/Comments
1	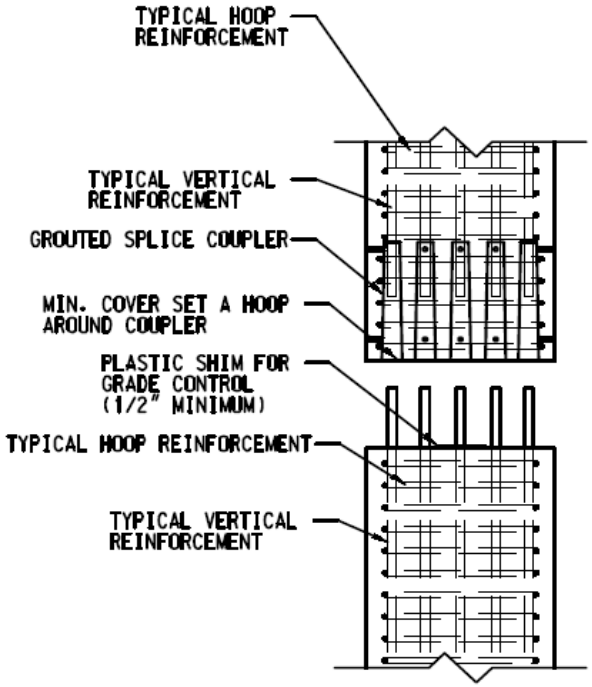 COLUMN TO COLUMN CONNECTION PRIOR TO CONNECTION Source: FHWA Connection Manual	Implemented by Utah DOT Designed to transmit shear, moment, compression, tension and torsion. 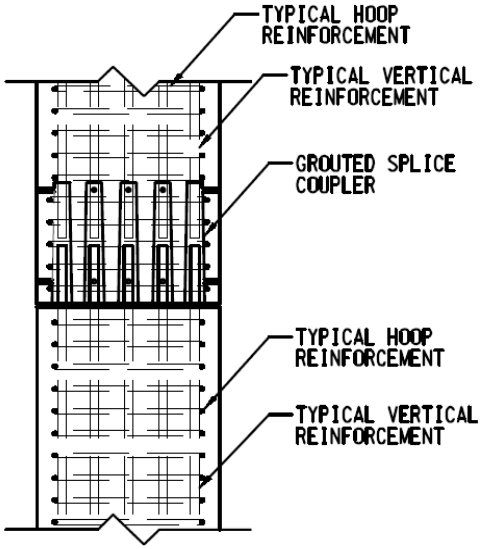 COLUMN TO COLUMN CONNECTION AFTER CONNECTION

PIER CONNECTIONS

Precast pier column to CIP footing

Rank	Joint details	Description/Comments
2	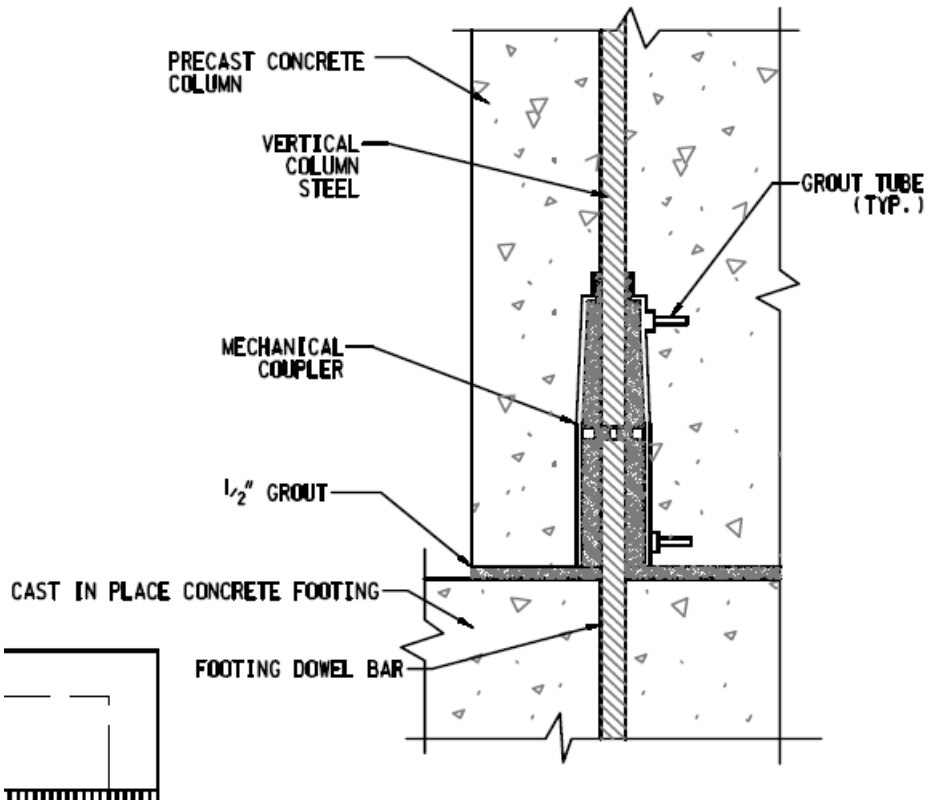 Source: FHWA Connection Manual	Implemented project: Edison Bridge, Florida This Connection was made with a steel grouted reinforcing bar splicer system. The grouted splicers can develop over 150% of bar yield. Quality control on bar and splicer locations are critical. The splicers can be oversized to accommodate approximately 1/2" of tolerance. The only design effect is that the bars must be moved closer to the center of the members in order to maintain cover around the splicers (approx. 1"). Designed to transmit shear, moment, compression, tension and torsion.

PIER CONNECTIONS

Precast concrete pier column to CIP concrete footing

Rank	Joint details	Description/Comments
1	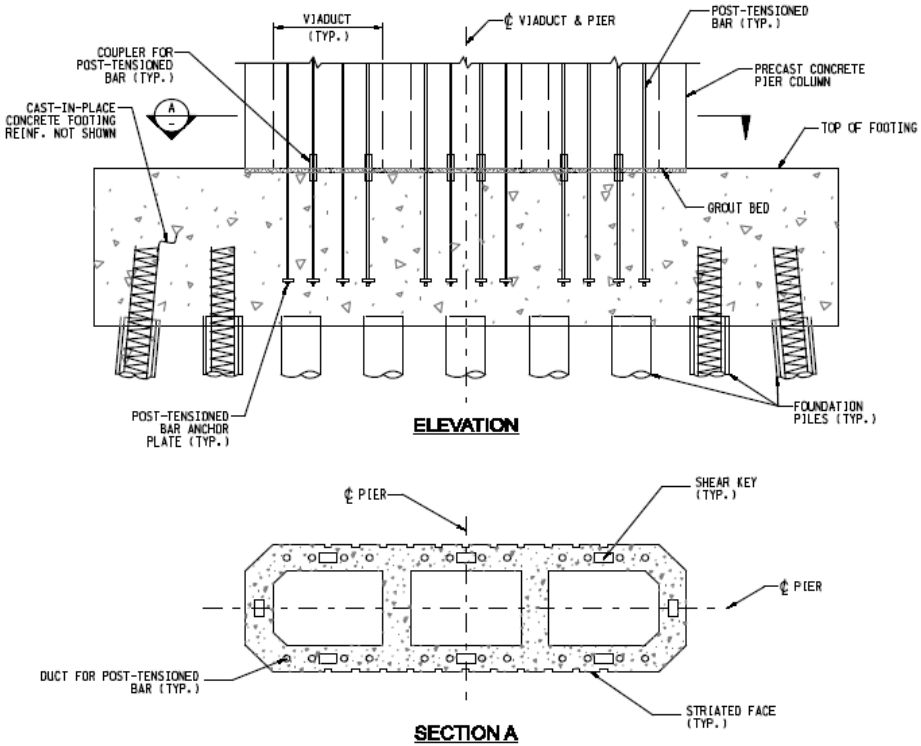 Source: FHWA Connection Manual	Implemented project: Replacement of I-287 Viaduct over the Saw Mill River Parkway, NY The detail shown is the connection between the bottom pier segment and the footing. Post-tension rods were embedded in the cast in place footing and spliced with couplers at several levels. Upon the completion of the installation of all segments, the entire pier was post-tensioned. Designed to transmit shear, moment, compression, and tension.

PIER CONNECTIONS

Precast cap beam to precast column

Rank	Joint details	Description/Comments
3	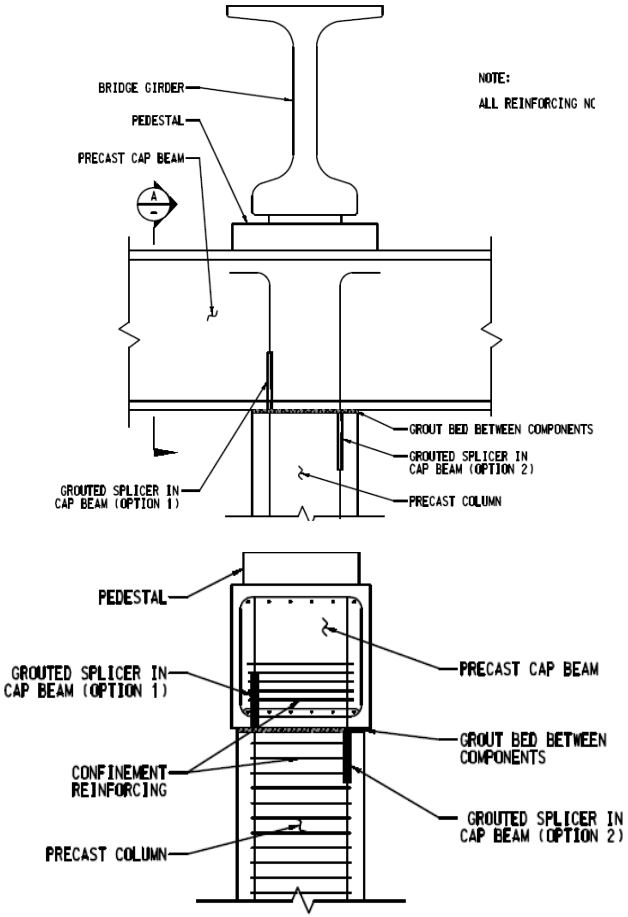 Source: FHWA Connection Manual	Conceptual: PCI Northeast Bridge Tech Committee The grouted splicers can be placed in the column or the cap beam. The cap beam is shimmed to grade and grouted. Square, hexagonal and octagonal columns are preferred over round columns because they can be cast in the flat position. Long cap beams may require a joint. This joint can be left open in order to control thermal forces, or can be connected with a small closure pour after placement. Designed to transmit shear, moment, compression, tension and torsion.

SUBSTRUCTURE ABUTMENT CONNECTIONS

ABUTMENT CONNECTIONS

Precast concrete abutment wall to precast concrete footing

Rank	Joint details	Description/Comments
1	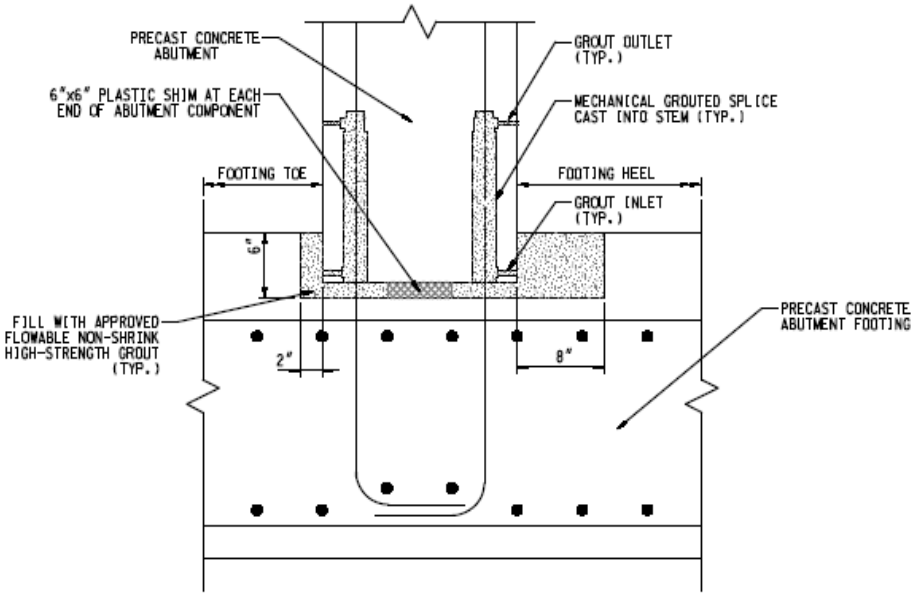 DYWIDAG anchor system for connecting the abutments to the footing was suggested to minimize grouting efforts, but do not have specific details available.	Implemented projects: NHDOT - Bureau of Bridge Design, Epping, New Hampshire MDOT, M-25 over the White River, Harbor Beach The key feature with the connection is the embedded grouted splice sleeve connectors Care needs to be taken with the casting of the footings and panels within tolerance so that the splice sleeves line up with the extended bars Grouting challenges have been documented Designed to transmit moment, shear, and bearing Source: FHWA Connection Manual

ABUTMENT CONNECTIONS

Precast concrete abutment wall to abutment seat

Rank	Joint details	Description/Comments
2	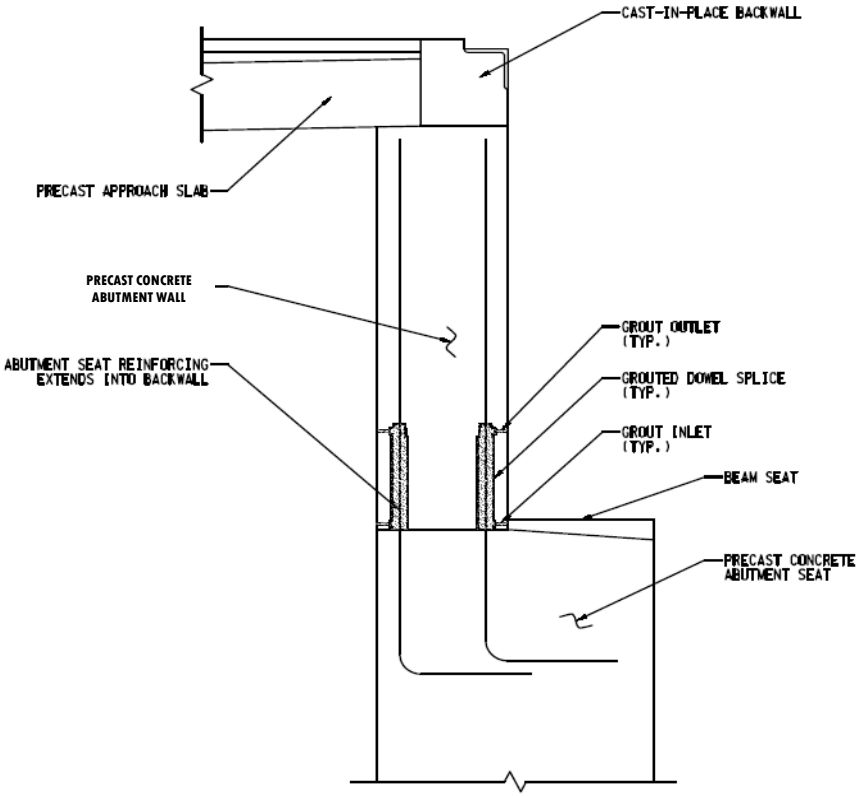 SECTION THROUGH CONNECTION Source: FHWA Connection Manual	Implemented project: under NHDOT - Bureau of Bridge Design, Epping, New Hampshire This detail is similar to the NH wall stem to footing detail. The connection is made with grouted slice sleeves. Care needs to be taken with the casting elements within tolerance (about 1/2") so that the splice sleeves line up with the extended bars. This was not a problem during construction. The design of the connection was according to ACI Manual on Emulation Design. This connection is also used to transfer longitudinal seismic forces from the superstructure to the substructure. Designed to transmit shear, moment and compression

ABUTMENT CONNECTIONS

Precast concrete integral abutment to steel pile

Rank	Joint details	Description/Comments
1	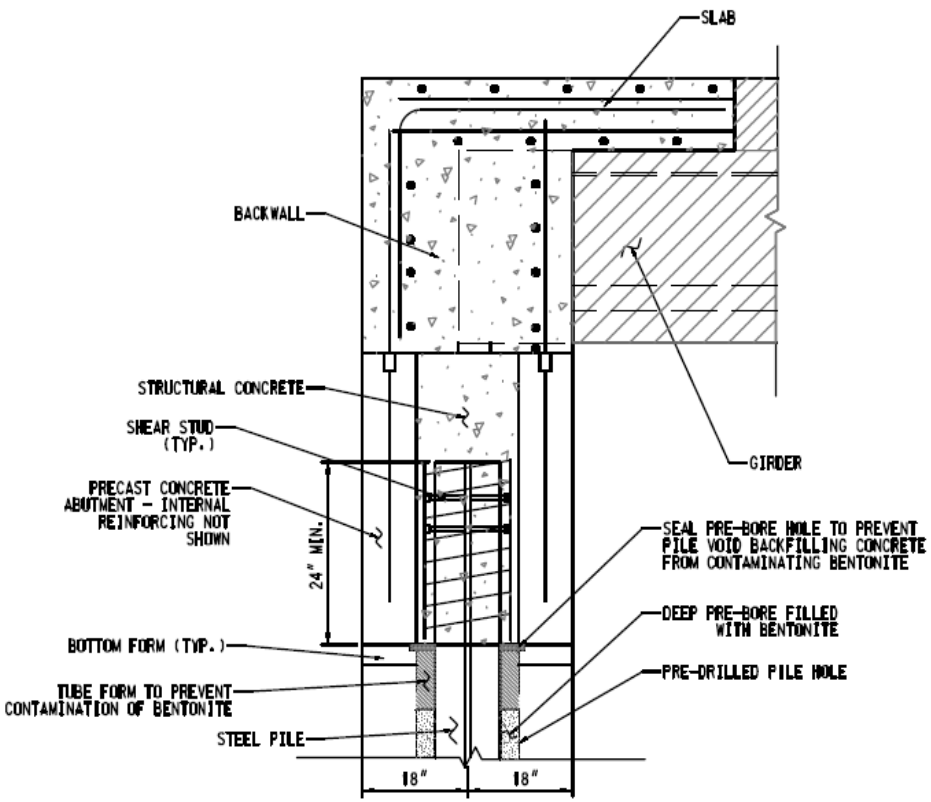 SECTION THROUGH PRECAST CONCRETE INTEGRAL ABUTMENT Source: FHWA Connection Manual	Implemented projects: Boone County IBRC Project over Squaw Creek, Madison County IBRC Project, Iowa Two 7/8 inch by 5 inch shear studs were welded to each side of the pile web to aid in connection. The footing was placed over the pile and the voids (corrugated metal pipe) were filled with a special concrete mix designed for rapid cure. The void under the precast abutment footing created by this method of construction was filled with flowable mortar. This connection enabled pile to be driven, abutment footing placed, and flowable mortar placed in one day. The concrete in the footing voids were placed the next day. Designed to transmit compression

ABUTMENT CONNECTIONS

Precast abutment cap to pre-stressed concrete pile

Rank	Joint details	Description/Comments
2	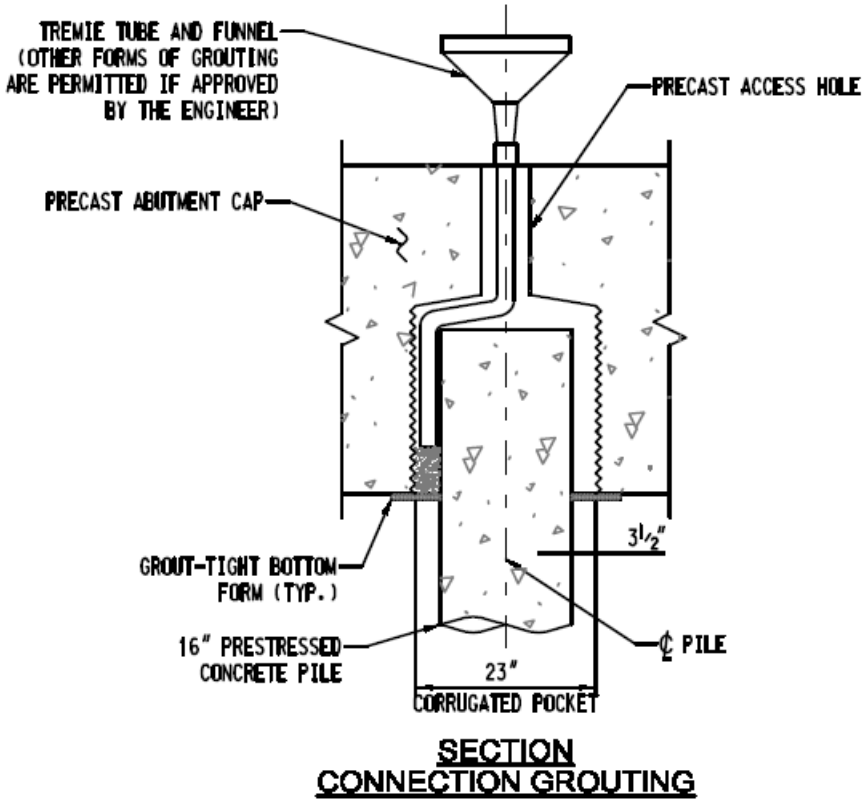 Source: FHWA Connection Manual	Implemented by Texas Department of Transportation, Tanglewood Designed to transmit shear, moment, compression, tension and torsion.

DECKED STRINGER SYSTEM

DECKED STRINGER SYSTEM

Diaphragms-to-Precast Spread Girders

Rank	Joint details	Description/Comments
1	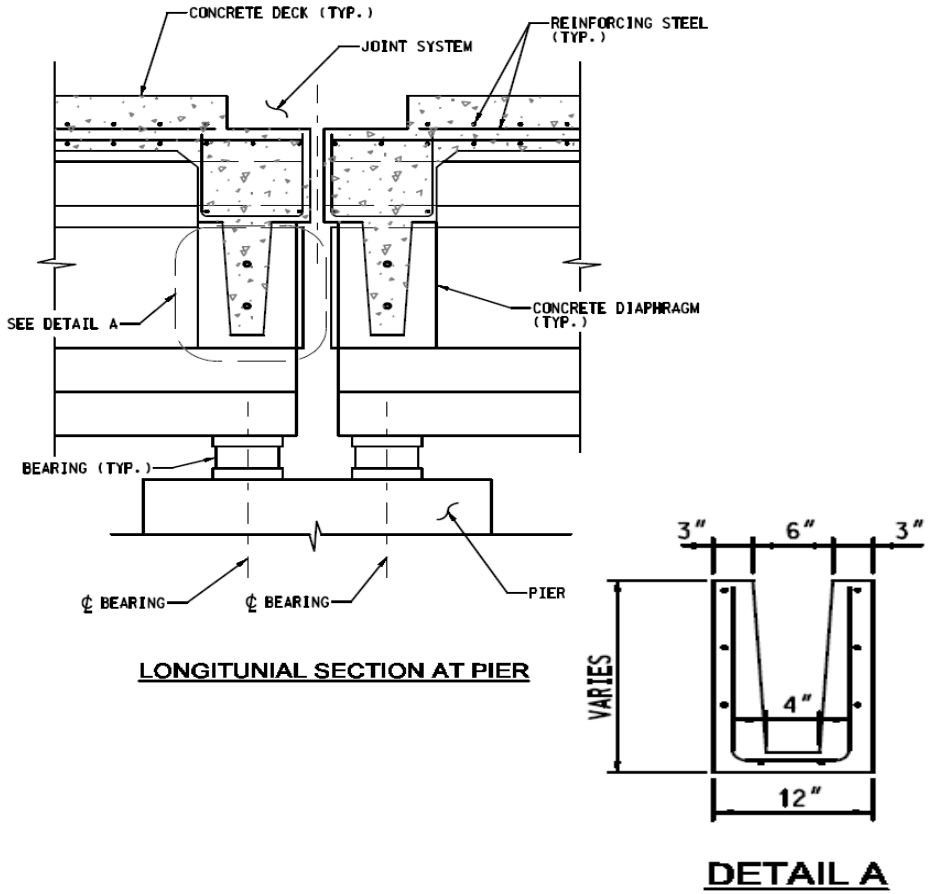 Source: FHWA Connection Manual	Commonly used in New York State The detail shown is a precast diaphragm that is attached to precast bulb tees and/or AASHTO I-beams. The precast portion of the diaphragm acts as a form. The precast piece is U-shaped and when it is set in place reinforcing runs through the girder webs and into the diaphragm. CIP concrete is then placed in the precast diaphragm to form the connection. Designed to transmit shear, moment and compression

DECKED STRINGER SYSTEM

Inverted Tee beam-to-Inverted Tee beam at pier

Rank	Joint details	Description/Comments
1	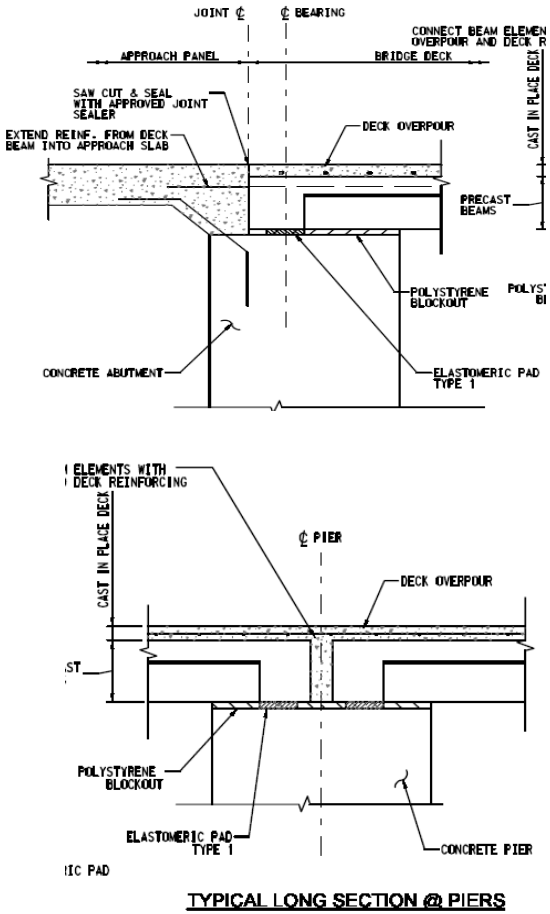 Source: FHWA Connection Manual	Implemented project: Bridge 13004, TH 8 over Center Lake Channel, Center City, MN Beams rest on elastomeric pads on pier cap with a 4" space between successive spans. Vertical dowels in pier cap, spaced 12" apart over central 50% of bridge width, are between beams. A prefabricated rebar cage spans across pier cap in the channels formed by adjacent Inv-T beams. When deck topping is poured, the space between beams is filled as well, forming a continuous connection. Designed to transmit shear and moment

DECKED STRINGER SYSTEM

Steel I-Girder-to-Steel I-Girder connection at pier or abutment

Rank	Joint details	Description/Comments
1	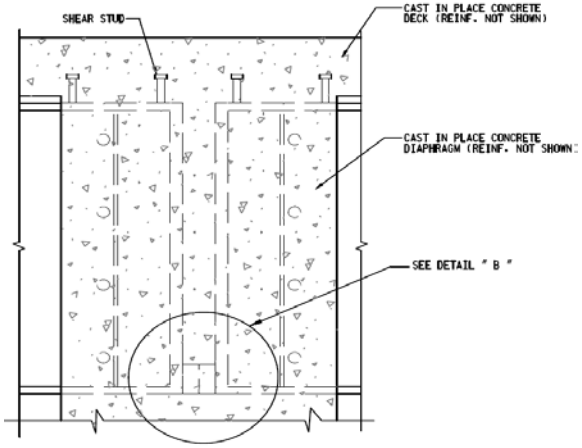 SECTION AT PIER CONNECTION 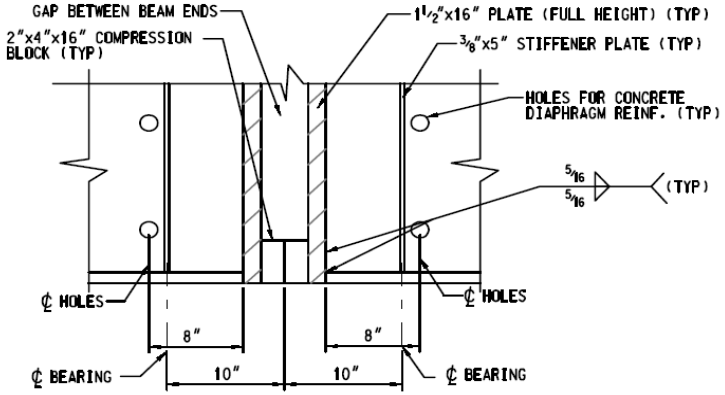 DETAIL "B " Source: FHWA Connection Manual	Implemented projects: Sparague Bridge, Lincoln, NE The bottom of girders are in contact through thick plates welded to end bearing plates. The construction sequence proceeds with pouring the concrete diaphragm all the way to bottom of the girder top flange. After about three days after casting concrete diaphragm, the concrete deck could be cast. The continuity for the live loads and superimposed dead loads are provided by reinforcement over the pier, prior to casting deck panel. Designed to transmit shear and compression

DECKED STRINGER SYSTEM

Steel box girder-to-Steel box girder connection at pier

Rank	Joint details	Description/Comments
1	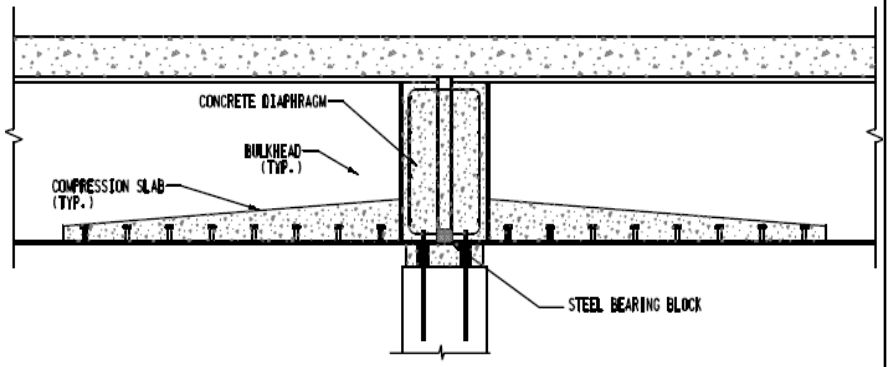 SECTION THROUGH STEEL BOX GIRDER CONNECTION AT PIER Source: FHWA Connection Manual	Implemented projects: N2 Over I-80, Near Grand Island Nebraska The end of girders consists of plates welded to top flanges and thick plates welded to bottom flange of box. The end shown is placed over the pier. The two adjacent box girders contact over the pier via plates welded to the bottom flanges. The steel bulkhead shown serves two purposes. It stabilizes the box ends and provides a formwork for placing the concrete diaphragm over the pier. The continuity for the live loads are achieved through reinforcement placed over the pier prior to casting the deck panel. Designed to transmit shear and compression

DECKED STRINGER SYSTEM

Precast panel unit to precast panel unit over steel girder

Rank	Joint details	Description/Comments
2	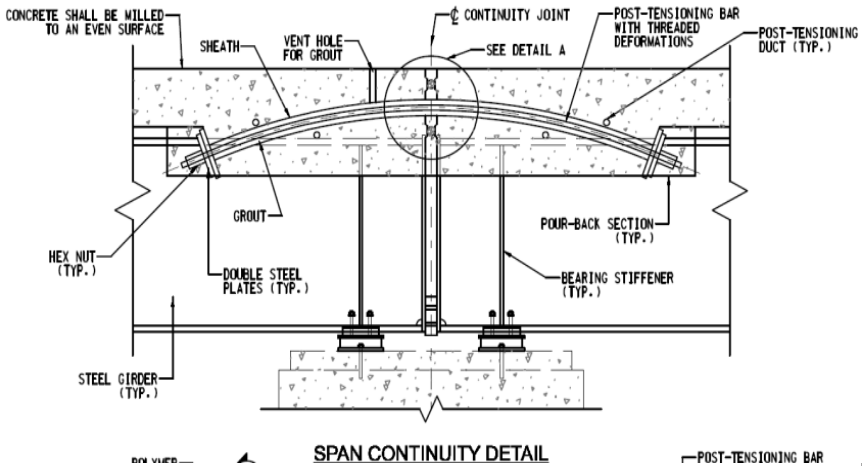 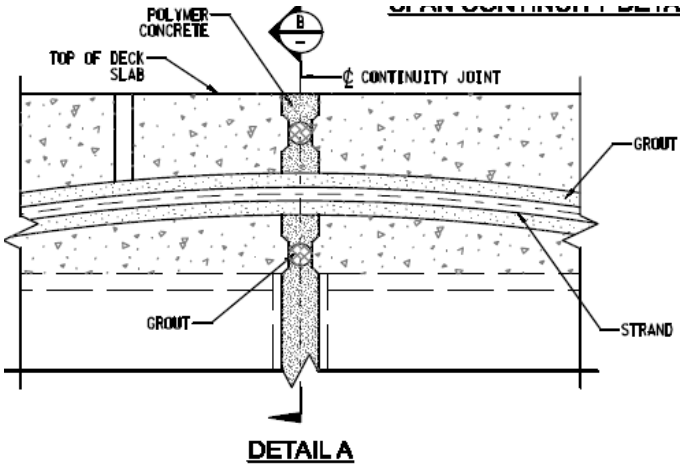 Source: FHWA Connection Manual	Implemented projects: Route I-95 over Lombardy Street and CSX Railroad, VA Designed to transmit shear and compression

APPENDIX C

PERFORMANCE OF BRIDGES CONSTRUCTED USING ABC TECHNIQUES

Full-Depth Deck Panel Systems

Bridge Description	Design Details	Observations
I-84 Bridge, Weber Canyon, Utah, Built 2009		
Deck replacement using precast deck panels.	Three span bridge with a superstructure of prestressed AASTHO I girders with precast deck panels.	Joint Type: Between panels the joint is a welded tie. Observations: Efflorescence and staining was found on the underside of the deck at the transverse joints. Inspected 1- year after construction. (Culmo 2010)

I-15 Bridge, Payson, Utah, Built 2009		
ABC Feature is the full-depth deck panels with post-tensioning. Polymer overlay is used.	Three span bridge with a superstructure of prestressed AASTHO I girders with precast deck panels.	Joint Type: Longitudinal post-tensioning to compress the transverse joints. Transverse dowels spaced at 9” centers between panels develop the longitudinal closure. Polymer overlay is used to increase the water-tightness. Observations: Very little efflorescence found, the joint’s performance is good. Less staining than on bridges with a welded tie connection. The deck is in good condition and the post-tensioning and polymer overlay keep the joints water-tight. Inspected 1- year after construction. (Culmo 2010)

I-80 Silver Creek Canyon Bridge, Utah, Built 2007		
Precast full-depth deck panels used as an ABC feature.	Four simple span bridge with steel girders and a continuous deck.	Joint Connection: Welded Tie connection between panels and a bituminous overlay. Observations: Efflorescence staining found at the joints and active water leakage seen through the joints. The joint at the abutment is showing heavy leakage. The continuous deck panels subjects them to negative moment over the piers which could be a cause of the leakage. The deck panels are also integrated into the backwall and does not allow for thermal movement which is cause for the leakage at the abutments. Inspected two years after construction. (Culmo 2010)

I-84; US-89 to SR-167, Weber Canyon, Utah, Built 2008		
ABC feature is the use of full-depth precast deck panels.	Eight span bridge, two continuous spans and six simple spans. The superstructure consists of steel girders and precast deck panels.	Joint Connection: The connection between panels is a welded tie with a polymer overlay. Observations: Efflorescence seen at the transverse joints and the haunches and the closure pours. Staining seen on the underside of the deck panels. Placement of the deck panels during construction was not monitored and the fit of the panels was difficult. The spacing of the panels was increased to accommodate tolerance issues.

		First inspected one year after bridge construction. (Culmo 2010)

I-84; US-89 to SR-167, Weber Canyon, Utah, Built 2008		
ABC feature is the precast full-depth deck panels.	Six span bridge, five continuous spans and one simple span. The superstructure consists of steel girders and precast deck panels.	Joint Connection: The connection between panels is a welded tie and a polymer overlay. Observations: Efflorescence seen at the transverse connections. Staining seen on the underside of the deck panels. The simple support span shows very little leakage and the continuous spans show active leakage at every joint. First inspected one year after bridge construction. (Culmo 2010)

I-215 East over 3760 South and 3900 South, Utah, Built 2006		
ABC feature is the precast post-tensioned deck panels.	The bridge consists of three spans. The superstructure consists of steel girders and precast deck panels.	Joint Connection: The joint connections between panels are post-tensioned deck panels with a polymer overlay. Observations: Connections are performing well. Cracks and leakage is seen in the closure pour. First inspected three years after bridge construction. (Culmo 2010)

I-15 at Parrish Lane Ramp and Interchange Improvement, Utah, Built 2004		
The ABC feature is a widening using precast deck panels and precast bent caps.	The bridge consists of two continuous spans. The superstructure consists of steel girders and precast deck panels.	Joint Connection: The connection was welded tie and has a bituminous overlay. Observations: Efflorescence is seen on the underside of the deck panels at the transverse joints. Active leakage is seen through many joints including the closure pour at the backwall abutment, haunches, transverse panel joint, longitudinal closure pour and the shear connector pockets. Inspected six years after construction. (Culmo 2010)

Riverdale Road, I-15 to Washington Blvd, Utah, Built 2008		
The ABC elements to this bridge were the precast deck panels, approach slab panels, sleeper slab, and abutments.	The bridge superstructure has two spans with steel girders and precast deck panels.	Joint Connection: The panels were connected together using longitudinal post-tensioning. The overlay was a polymer. Observations: A minor amount of leakage occurred prior to the placement of the overlay. Since the overlay was placed no leakage was observed. The overlay is cracking near the backwall and is causing the sleeper slab to deteriorate. The leakage that is present is most likely due to the shrinkage cracks. The bridge was inspected two years after construction. (Culmo 2010)

I-80; Kimball Jct to Silver Creek, Utah, Built 2008		
The ABC technique used was a full-depth deck panel to widen the bridge.	The bridge has one span and uses AASHTO I-Girders in the superstructure of the bridge.	Joint Connection: The connection between panels was a welded tie with a three inch asphalt overlay. Observations: Active leaking was found at the transverse joints. The overlay was cracking at the end of the approach slab. The leaking is being controlled by the bituminous overlay. The shrinkage of the closure pour concrete has caused the deck panels to spread and allow for more leakage. The bridge was inspected two years after construction. (Culmo 2010)

US-6; MP 200 Bridge Replacement, Utah, Built 2008		
The ABC techniques used were precast deck panels, approach slab panels, sleeper slabs, and abutments.	The single span bridge consists of prestressed girders and precast deck panels in the superstructure.	Joint Connections: The panels were connected with closure pours. The overlay has membrane and bituminous. Observations: Minor leakage seen from the underside. Efflorescence seen at the closure pour at abutment to backwall, haunches, transverse panel joints. Shrinkage cracks are seen at the longitudinal closure pour. The bridge was inspected two years after construction. (Culmo 2010)

County Road over I-80, 1.9 Miles East of Wanship, Utah, Built 2003		
The ABC technique was the use of full-depth deck panels.	The bridge has five spans and uses steel girders and precast deck panels for the superstructure.	Joint Connections: The connections between panels were a closure pour with cast concrete. The overlay was a polymer. Observations: Minimal creaking and leakage has been found. The cracks seen on the underside appear to be shrinkage cracks. The bridge was inspected seven years after construction of the bridge. (Culmo 2010)

I-70; Eagle Canyon Bridge, Utah, Built 2009		
The ABC technique was the use of precast deck panels.	The bridge has one span and uses a steel deck arch and precast deck panels for the superstructure.	Joint Connections: The connections between panels were post-tensioned. The overlay was a polymer. Observations: No signs of leakage have been found. The bridge is in good working order. The bridge was inspected one year after construction of the bridge. (Culmo 2010)

Parrish Lane Railroad Bridge Crossing, Utah, Built 2008		
The ABC techniques were the use of precast deck panels and precast bent caps.	The bridge has three spans and uses a steel plate girder and precast deck panels for the superstructure.	Joint Connections: The connections between panels were post-tensioned. The overlay was bituminous asphalt. Observations: The bridge is in good working order. There are minor

		cracks seen at the joints and shear connector pockets. The bridge was inspected two years after construction of the bridge. (Culmo 2010)

I-84; US-89 to SR-167, Weber Canyon, Utah, Built 2009		
The ABC technique was a deck replacement with precast deck panels.	The bridge has three spans and uses prestressed AASHTO I girders and precast deck panels.	Joint Connections: The connections between panels were a welded tie with a polymer overlay. Observations: There is much staining and efflorescence seen on the underside of the deck at the transverse joints, haunches, and closure pours. No sign of leakage is seen at the shear pockets. The welded tie connections do not appear to be performing well. The bridge was inspected one year after construction of the bridge. (Culmo 2010)

I-15; Bridge Deck Replacements; F-127, F-129 & F-130, Payson, Utah, Built 2009		
The bridge used full depth post-tensioned deck panels as the ABC technique.	AASHTO I girders and precast deck panels were used for the superstructure of this bridge. The bridge consisted of three spans.	Joint Connections: The connections between panels were longitudinal post- tensioning. Longitudinal closure had transverse dowels spaced at 9”. The overlay is a polymer. Observations: When compared to the welded tie connection there is less efflorescence and leaking seen. The bridge is in good working condition.

		The bridge was inspected one year after construction of the bridge. (Culmo 2010)

SR-89;State Street Railroad Bridge, Pleasant Grove, Utah, Built 2009		
The bridge used precast deck panels, approach slab, and sleeper slabs.	The single span bridge superstructure consist of AASHTO I girders and precast deck panels.	Joint Connections: The connections between panels were welded tie spaced at 2'centers, perpendicular to beams. Welded ties were used for longitudinal closure pours at quarter points. The overlay was a polymer. Observations: The efflorescence and leakage seen is minimal. Some staining is seen at the closure pour. The sleeper slab is not lined up right with the approach slab. The overlay is cracking at every approach slab joint and over the backwalls. The bridge is in good condition but should be inspected again due to the young age of the bridge. The bridge was inspected in less than a year after construction of the bridge. (Culmo 2010)

US-6; MP 218.7 to Emma Park Road, Utah, Built 2009		
The ABC techniques used were precast post-tensioned deck panels, post-tensioned approach	The single span bridge superstructure consists of AASHTO I girders and precast GRFD deck panels.	Joint Connections: The connections between panels were post-tensioned longitudinally with one longitudinal closure pour at bridge center line. Also, transverse closure pours at the backwall and approach slab joint was used. A polymer overlay is used.

slab panels, and sleeper slab panels.		Observations: Both of the closure pours are leaking and have efflorescence. The minor cracking was documented in the closure. The bridge was inspected a year after the construction. (Culmo 2010)

B-552 Bridge in Bedford county, Everett, Pennsylvania. Built prior to 1973, for a private community.		
One lane simply supported bridge with full-width, full-depth precast concrete panels designed for low volume traffic.	Designed for a private community access. Prestressing or post-tensioning was not used.	Joint type: The panels are held adjacent to each other using slab-girder connection (tie-downs). Width of the joints between deck panels is 0.375 in. typically and 0.44 in. adjacent to the center panel. Observations: Steel girders were extensively corroded but precast concrete panels were in good condition with no leaking, leaching or cracking. However, efflorescence was present along slab and curb joints. The wearing surface had some areas with exposed aggregate. The bridge was inspected during 1993-95. (PTC 2012; Issa *et al.* 1995b)

Dublin 0161 Bridge, Columbus, Ohio. Year built is 1986.		
Two-phase construction was adopted to replace the six-span skew bridge deck. Full-depth	Thickness varied from 9.5 in. - 14 in. Panel width: 28 ft.	Joint type: Epoxy mortar was used as grout for shear key connection between panels in both transverse and longitudinal joints. Panels are post-tensioned longitudinally after erection to secure the joints.

precast reinforced concrete panels with 2.5 in. asphalt concrete wearing surface.	Panel length: 12 ft 1.5 in., 9 ft 10.5 in., 9 ft 6.5 in., 9 ft 5.5 in. and 10 ft 1 in. Panels are not prestressed.	Observations: The bridge superstructure was found to be very rigid but with random cracks on overlay. No signs of leaking, leaching or debonding were present. The bridge was inspected during 1993-95 (i.e., about 7 years after construction). (Issa *et al.* 1995b)

Harriman Interchange Bridge, Orange County, New York. Year built is 1979.		
Three-span, two-lane ramp. Each span is 75 ft long.	Panel thickness: 8 in. Skew precast concrete panels are not leveled on beam flanges to control super-elevation. Thus, epoxy mortar bed, thicker on one edge of flange than other, was used to level it.	Joint type: 3 ft wide cast-in-place longitudinal joint connects adjacent panels. Transverse joints were not post-tensioned. Deck had a membrane and a 6 in. overlay. Observations: Reflective cracks on asphalt near transverse joints, and random cracking and spalling of joints at the bottom side of the panels. The bridge was inspected during 1993-95 (i.e., about 14 years after construction). (Biswas 1986; Issa *et al.* 1995b)

Burlington Bridge over Mississippi river, Illinois – Iowa border. The bridge was built during 1992 – 1993.		
Two cable-stayed spans with 10 in. precast concrete deck covered with 2-in. low slump dense concrete	Panel thickness: 10 in. Panel width: 46 ft 8 in, 37 ft 8 in Panel length: 13 ft 9 in Post-tension spacing: 1 ft 4.75 in.	Joint type: 15 in. gap joints between adjacent precast panels were filled with cast-in-place type-III cement-concrete. Shear pockets and longitudinal joints were filled with class-D concrete. Haunch was formed with high flow, high strength, early load-bearing, non-shrink

overlay. Corrosion inhibitor admixture was incorporated in the concrete of precast concrete deck panels.	Initial post-tension force: 89 and 166 kips	grout. A group of three panels were post-tensioned in transverse and longitudinal directions. Observations: No major joint leaking was observed. The fatigue cracks were observed which were formed as a result of construction equipment vibrations on the deck (note that only three panels were connected at a time). Nevertheless, the bridge was performing well. The bridge was inspected during 1993-95 (i.e., about 1 year after construction). (Issa *et al.* 1995a; Issa *et al.* 1995b)

Bayview Bridge over Mississippi River, Illinois-Missouri border. Year built is 1986. The bridge was opened to traffic in 1987.		
Three-span cable stayed bridge. Fourteen continuous approach spans with 9 in. cast-in-place concrete deck. The main three spans over the river consists of 9 in. precast deck panels covered with a 1.75 in. waterproofed	Panel thickness: 9 in. Panel width: 46.5 ft Panel length: 9 - 11 ft Posttension spacing: 7 in. Initial stress: 105 ksi Three to five panels are post-tensioned to form groups.	Joint type: Butt joints Observations: No significant problems at the joints although some presence of rust, indicating some leakage. The bridge was inspected during 1993-95 (i.e., about 6 years after construction). Major reason for the observed performance is that the cable-stayed precast deck is in compression. (Issa *et al.* 1995b)

bituminous wearing surface.		

B-501 Bridge, Exit ramp for Pennsylvania Turnpike, Somerset County, Pennsylvania. Year built is 1940; Resurfaced in 1970.		
Simple span bridge with full-depth precast concrete panels and an overlay of latex modified concrete.	Panel thickness: 8.5 in. Precast reinforced concrete panels (i.e., no prestressing). No post-tensioning after erection of the panels to compress the joints.	Joint type: Panel-to-panel connection - 65% of panel portion from bottom forms a dry joint. The depth and width of the remaining 35% of the joint are 3 in. and 0.75 in., respectively. A depth of 1.25 in. from the bottom of the 3 in. deep gap is filled with rubberized joint seal material while the rest is covered with neoprene compression joint seal. Observations: Steel girders had extensive surface corrosion. Several tie-downs, which established the deck panel – girder connections, were missing. Excessive leakage was noted at precast deck panel joints. Top surface indicated some active cracks although prior patching was performed on it. The bridge was inspected during 1993-95 (i.e., about 50 years after construction). (Issa *et al.* 1995b; COP 2007)

Waterbury Bridge, Connecticut. Year built is 1965. Entire bridge was reconstructed in 1989.		
Six-span bridge with three continuous spans and a hung span supported by pin and	Panel thickness: 8 in. Panel width: 26 ft 8 in. Panel length: 8 ft	Joint type: Transverse joints are formed by filling female-to-female type joints with high strength non-shrink grout.

hanger connections. The width of the bridge is 27 ft 6 in.	Initial stress: Arbitrary stress of 150 psi for simple spans and 300 psi in the three-span continuous portion was applied. Panels are covered with a Class I waterproofing membrane and a 2.5 in. thick bituminous layer.	Observations: No joint cracking or leaking reported. The bridge was inspected during 1993-95 (i.e., about 4 years after construction). (Issa, *et al.* 1995b)

Route 235 Bridge over Dogue Creek, Fairfax, Virginia. Year built is 1932; Rehabilitated in 1982.		
Information related to structural configuration is not available in literature.	Panel dimensions were not available in literature. Class I waterproofing covers the entire deck Precast concrete panels are neither prestressed nor post-tensioned longitudinally.	Joint type: Standard configuration of female-to-female type grouted shear key joints was provided between panels. Adjacent panels were spaced with 0.25 in. gap at the bottom, which is the recommended practice. Observations: Leakage, cracking and rust stains visible at joints. Transverse deck cracks and efflorescence were noted at construction joints. The bridge was inspected during 1993-95 (i.e., about 11 years after construction). (Issa *et al*. 1995b)

Vischer Ferry Road Bridge, Schenectady County, New York. Year built is 1900, destroyed in 1902 with ice; Rebuilt in 1975; Deck was rehabilitated in 1980.		
Information related to	Haunch was formed using 0.5 in.	Joint type: Panel-to-panel joint details are not available in literature.

structural configuration is not available in literature.	thick stiff grout placed on structural steel members. No longitudinal post-tensioning was provided.	Observations: Minor leakage beneath the deck was noted. It is believed that the low volume of traffic is the cause of better performing deck. The bridge was inspected during 1993-95 (i.e., about 13 years after construction). (Issa *et al*. 1995b)

Krumkill Road Bridge, Albany County, New York. Year built is 1939; Rehabilitated (i.e., deck replaced along with installing welded headed studs to create composite action) in 1977		
Fifty feet long, single span mainline throughway bridge. The bridge consists of two structurally separated three-lane spans supported on common abutments.	Panel thickness: 7.5 in. Panel width: 42 ft and 21 ft. Panel length: 5 ft 2 in. No post-tensioning was applied in the longitudinal direction to compress the transverse joints. A membrane and a 6 in. thick asphalt layer were placed on top of the deck panels.	Joint type: 3 ft wide cast-in-place longitudinal joint. Observations: The bridge was under the category of high traffic volume bridges. Fracture and spalling was observed at transverse joints due to lack of post-tensioning. Moreover, frequent leakage was observed through the transverse joints, which was leading to corrosion of girders. Cracks were also present in the overlay. The bridge was inspected during 1993-95 (i.e., about 17 years after construction). (Biswas 1986; Issa *et al*. 1995b)

Batchellerville Bridge, Saratoga County, New York. Year built is 1930. Deck replaced completely in 1982 along with installation of new floor beams.		
Total length of the bridge is 3,075 ft. Deck width is 28	Panel thickness: 8.5 in. Panel width: 28 ft.	Joint type: Grouted shear keys.

ft.	Panel length: 11 ft 8 in. to 13 ft variable Transverse slab joints are located on top of floor beams. No post-tensioning is present. Two-inch thick asphalt concrete overlay was placed on the full-width precast concrete panels that were mounted on the new floor beams.	Observations: Minor deboning in the joints between precast panels and some cracks in asphalt concrete overlay were noted. Low traffic volume is the cause of the excellent working condition of the structure. The bridge was inspected during 1993-95 (i.e., about 10 years after construction). (NYState DOT 2012; Issa *et al.* 1995b)

Oakland Bay Bridge, San Francisco, California. Rehabilitated during 1960-61.		
Original design was to accommodate trucks and trains on the lower deck and ordinary cars on the upper deck. During 1960-61, the train lines were removed and precast deck panels were placed adding two additional traffic lanes. Due to Loma Prieta	Lightweight concrete deck panel dimensions are not given in literature.	Joint type: 12 in. wide closure pours in between adjacent panels. Observations: Cracking and leaching present in both precast and cast-in-place areas of deck. However, more cracking and leaching was visible on the cast-in-place concrete deck. The bridge was inspected during 1993-95 (i.e., about 33 years after construction). (Issa *et al.* 1995b)

earthquake in 1989, a small section of the lower deck was damaged and the entire width in that section was replaced with precast concrete panels without an overlay.		

Chulitna River Bridge, Over Chulitna River, Alaska. Year built is 1921; Full superstructure rehabilitated in 1992		
The bridge is 790 ft long. Full-depth, full-width precast panels were placed as part of the rehabilitation program. Width of the bridge is 42 ft 2 in. Stage construction was executed to facilitate mobility.	Panel thickness: 10 in. to 7 in. variable. Panel width: 21 ft 0.75 in. Panel length: 12 ft 0.625 in. to 3 ft 0.625 in. variable at edges and 8 ft overall at all other locations. The deck panels were covered with a waterproofing membrane and a 2 in. thick asphalt overlay. Width of the waterproofing membrane was limited to 18 in. but placed over all the joints.	Joint type: Transverse joints are grouted female-to-female connections without post-tensioning. High strength quick set grout (magnesium phosphate concrete) was used for shear pockets, haunches, and joints. Observations: Underneath the bridge minor leaking and leaching was found along with minor debonding at the joints. No overlay cracking was observed and was in good condition. There was a concern on possible rotation at the joints due to partial-depth grouting leading to debonding, leaking and leaching. The bridge was inspected during 1993-95 (i.e., about 1 year after construction). (Issa *et al.* 1995a; Issa *et al.* 1995b)

Cochecton Bridge over Delaware River, Sullivan County, New York. Year built is 1950. Deck panel replacement in 1978.		
The three-span, two-lane, truss bridge is 675 feet long. Staged construction techniques were implemented to facilitate mobility.	Panel thickness: 7.5 in. Panel width: 15ft 4 in. and 13ft 10.5 in. Panel length: 7ft 6in. Deck panels were covered with a waterproofing membrane and a bituminous wearing surface. No post-tension across the joints.	Joint type: Type-II Portland cement with two parts of mortar sand was used as a grout to fill transverse and longitudinal joints. Observations: Reflective cracks were noted along the longitudinal joint. Transverse reflective deck cracking was observed over every other panel joint. Minor spalling was also observed under the deck. The bridge was inspected during 1993-95 (i.e., about 15 years after construction). (Baughn 2012; Issa *et al.* 1995b)

Route 155 Bridge over Normanskill, Albany County, New York. Year built is 1928 and deck replacement after 1972 with full depth precast concrete panels, along with transverse girders held by two trusses.		
Single span bridge. Bridge dimensions are not given in literature.	Panel thickness: 10 in. Panel width: 6 ft 4 in. Panel length: 12 ft 4 in. and 13 ft 4 in. Precast concrete panels were placed on transverse steel girders spaced at 12 ft 6 in. that were held by two trusses on either side.	Joint type: 1.75 in. wide female-to-female longitudinal shear key was filled with non-shrink cement grout. Two-inch wide transverse joints were connected with non-headed 0.75 in. diameter shear studs (4 in. long for intermediate panels and 1 in. long for the end panels) and then filled with grout. Observations: Transverse joints popped out; thus, filled with a foam stopper. Deck was leaking at the transverse joints while asphalt surface showed random cracking. The bridge was inspected during

		1993-95 (i.e., about 21 years after construction). (Issa *et al.* 1995b)

Seneca Bridge, Lasalle County, Illinois. Year built is 1932. The deck was replaced in 1986.		
The bridge consists of 13 spans, of which 9 of them are approach spans while the remaining for spans are interior truss spans. Total length of the bridge is 1510 ft 3 in.	Panel thickness: 6.5 in. Panel width: 23 ft Panel length: 4 ft Post-tension spacing: 2 ft 10 in. One-inch diameter grade 150 deformed bars were used to post-tension the panels. Eight such bars spaced at 2 ft 10 in. were used across the bridge width. Initial stress of 45 ksi was applied. Two-inch thick Class I concrete overlay with a waterproofing membrane cover the panels	Joint type: Match cast with epoxy adhesives Observations: Random cracks at the approach spans, joint leakage, and corrosion on steel supporting system were observed. The bridge was inspected during 1993-95 (i.e., about 7 years after construction). (Issa *et al.* 1995b)

William Preston Jr. Memorial Bridge over Chesapeake Bay, Sandy Point, Maryland. Year built is 1952. In 1987, deck was replaced with precast panels for most of the spans and the remaining with cast-in-place slabs.		
The bridge has two traffic lanes in each direction. Four full-width precast concrete panels are placed on each span.	Panel thickness: 6 in. Panel width: 31 ft 2.5 in. Panel length: 14 to 15 ft Precast concrete panels were not prestressed. The panels were post-tensioned in longitudinal direction to clamp the joints. Six-inch thick deck with two-inch thick layer of Latex Modified Concrete was placed on top of the panels as an overlay.	Joint type: Female-to-female grouted transverse joints between precast panels. Bottom portion of the joints are tight fit; hence, any size irregularities and dimensional growth of panels are not allowed. Observations: Both sides of deck were showing diagonal and map cracking due to absence of prestress in transverse direction. Though latex modified concrete had been used for the haunch, concrete popouts were visible where there was no adhesion between the deck and the supporting structure. Joint leakage under the deck at numerous locations with deposits and stains were observed; including presence of spalling with some steel exposure. The bridge was inspected during 1993-95 (i.e., about 6 years after construction). (Issa *et al.* 1995b; Eastern Roads Org. 2009)

High Street Overhead Separation Bridge, California. Year built is unknown. In 1978, 29 out of 30 spans were replaced with precast concrete deck panels.		
The left and right side of the bridge was widened in 1955 and 1963, respectively.	Panel thickness: Varies from 6.5 in. to 7 in. Panel width: 14 ft 2 in.	Joint type: All the joints including the longitudinal joint and the 9 in. closure pour between every two adjacent panels and the shear stud pockets were grouted with high alumina cement

	Panel length: Varies up to 40 ft. No post-tensioning was provided to clamp the joints.	concrete. Observations: The deck was found with cracking, leaking, leaching and rusting underneath. Transverse cracks spaced 2ft 6 in. apart were observed on the deck along with radial cracks and some shear stud pockets popping out on top. The bridge was inspected during 1993-95 (i.e., about 15 years after construction). (Issa *et al.* 1995b)

Amsterdam Interchange Bridge, Montgomery County, New York. Year built is 1954. Deck was replaced in 1973.		
The bridge has four spans and two lanes. Deck width is 45 ft. In 1973, the deck was replaced with cast-in-place concrete slab and precast concrete panels. Only 7 precast concrete panels were installed on half of span 2. Three panels were connected to the supporting structure using bolted connections	Panel thickness: 8 in. Panel width: 22 ft. Panel length: 4 ft. Longitudinal post-tensioning was not provided to secure the joint tightness. A waterproofed membrane and asphalt concrete overlay was used to protect the bridge deck.	Joint type: Female-to-female transverse joints were filled with low modulus epoxy mortar to form the shear keys. Shear key grout was formed by mixing one part resin and two parts aggregate. Observations: Joint leakage resulting in other deterioration such as spalling, cracking, and corrosion was documented. All spans showed 0.5 in. to 1 in. reflective transverse cracks at both sides of the joints. Width of the reflective longitudinal cracks that were visible in the middle of the bridge deck ranged from 0.125 in. to 0.25 in. The bridge was inspected

while the welded connection was used for the other four.		during 1993-95 (i.e., about 20 years after construction). (Biswas 1986; Issa *et al.* 1995b)

Kingston Bridge on Wurts Street, Over Rondout Creek, Ulster County, New York. Year built is 1921; Deck replaced in 1974 on existing beams.		
Seven hundred feet long three span, two lane suspension bridge deck was replaced with full-depth, full-width precast prestressed panels covering the 24 ft wide bridge.	Panel thickness: Varies from 6 in. to 7 in. from edge to crown. Panel width: 24 ft Panel length: 9 ft Precast panels were transversely prestressed to accommodate transport and handling stresses. Initial prestressing force applied to 0.5 in strands was 28.9 kips.	Joint type: V-shape male-to-female joint, with no grouting or caulking. Panels were tied together in the longitudinal direction using bolted tie rods. Observations: Transverse cracks were present over the transverse joints. Random leaking was found underneath the deck causing the concrete to spall near the leaky joints. The bridge was inspected during 1993-95 (i.e., about 19 years after construction). (Baughn 2012; Issa *et al.* 1995b)

Dalton Highway Bridges, 18 Bridges over Dalton Highway, Alaska. Deck replacement was during 1991-1992.		
Timber decks were replaced with full-depth, full-width precast, prestressed concrete deck panels on new steel stringers during 1991-1992.	Panel thickness: 9.5 in. at midspan and 7.5 in. towards edges. Panel width: 27 ft 5.4 in. Panel length: 4 ft 10 in and 5 ft 7 in. Deck panels were prestressed using 0.5 in. diameter, seven wire, low relaxation strands	Joint type: All bridges had grouted female-to-female transverse joints. Observations: The joint over the supports experienced cracking and loss of material. Most of the joints debonded. Typically all the transverse joints had cracking that were

	spaced at 1 ft 3 in. The effective stress of 149 ksi, after losses, was expected. In all the 18 bridges, there was no post-tensioning to compress the panel joints. There was no overlay on the deck. Traffic was allowed on the bridge with a speed of 3 miles/hour during staged construction. However, traffic was not allowed during grouting.	visible from top of the deck. In general, there were no leaks but specific bridges such as the Minnie creek bridge showed leaking at the joints. The bridge was inspected during 1993-95 (i.e., about 2 year after construction). (Issa *et al.* 1995a)

NB-216 Quakertown Interchange Bridge, Interchange exit for Pennsylvania Turnpike, Bucks County, Pennsylvania. Year built is 1940. Deck was replaced in 1981.		
The suspended cantilever bridge has a composite deck on the suspended span while a non-composite deck is on the cantilever span. Existing deck was removed in 1981 and full-depth deck panels were placed. Existing shear connectors were left undamaged when	Panel thickness: 6.5 in. Panel width: 17 ft 6 in. Panel length: 7 ft 7.5 in. Each panel covers one-half of the width. Longitudinal post-tensioning was provided to secure the transverse joint tightness. However, the force magnitudes and the post-tension spacing are not given in literature.	Joint type: Transverse joints were sealed with latex concrete grout after post-tensioning in the longitudinal direction. Observations: Full-width cracking was observed directly above each joint and reflected through the latex modified concrete overlay. Heavy spalling, water stains, and delaminations were documented. The bridge was inspected during 1993-95 (i.e., about 12 years after construction).

the old deck was removed. The new panels were cast with tight tolerances to accommodate the existing shear connectors.		(Biswas 1986; Issa *et al.* 1995b; COP 2007)

NB-750 Clark Summit Bridge, Lackawanna County, Pennsylvania. Deck was replaced in 1980.		
The two-lane, ten-span, 1627 ft long bridge has two parallel structures. In 1980, the deteriorated deck was replaced on existing superstructure system using full-depth, full-width precast panels.	Panel thickness: 6.75 in. Panel width: 29 ft Panel length: 7 ft Elastomeric strips and epoxy mortar grout was used to form the haunch over the existing girders. Issa et al. (1995) states that the nominal longitudinal post-tensioning was used along with non-shrink grout at transverse joints. Yet, the transverse post-tension design details such as force magnitude and spacing are not provided.	Joint type: Non-shrink cement grout with nominal post-tension was used to form the transverse deck panel joints. Observations: Cracking present in overlay at every panel joint. Underneath the deck, cracking and spalling at every joint was observed. It is believed that the majority of the durability problems arose due to inadequate connection between deck panels and stringers that resulted in significant vibrations under heavy traffic. The bridge was inspected during 1993-95 (i.e., about 13 years after construction). (Biswas 1986; Issa *et al.* 1995b)

Route 229 Bridge over Big Indian Run, Culpeper, Virginia. Year built is 1941. Deck was replaced in 1985.		
In 1985, precast concrete deck panels were installed on the existing steel girders. Ten-inch wide layer of Class II waterproofing membrane covers the joints.	Deck panel design details are not given in literature. There was no longitudinal post-tensioning present to clamp the joints.	Joint type: Female-to-female type grouted shear key joints were used between panels. Panels are in contact within the bottom portion of the joint even though the recommended practice is to leave at least a 0.25 in gap. Observations: No leaking present through the joints, but the overlay was not in a good condition. Observing the bridge deck from the bottom side, uniform transverse cracks were identified approximately 1ft apart near the center portion of the bridge deck. Moreover, some percolation was identified at the ends of the bridge deck. The bridge was inspected during 1993-95 (i.e., about 8 years after construction). (Issa et al. 1995b)

Bridges Constructed Using SPMT or the Slide-In Technique

Bridge Description	Design Details	Observations
I-80; Mountain Dell to Lambs Canyon, Utah, Built 2008		
The superstructure was prefabricated and moved using the SPMT.	The bridge is single span. The superstructure consists of steel girders and a cast-in-place deck.	Observations: Cracking in the span is essentially nonexistent. Cracking is seen in the overlay at the abutment joints. Leakage is seen at the backwall joint. The approach slab has failed and has been repaired. The repairs are also beginning to fail. Inspected two years after bridge construction. (Culmo 2010)

I-215; 4500 South Structure, Utah, Built 2007		
The superstructure was prefabricated and moved into place using the SPMT.	The bridge is single span. The superstructure consists of steel girders and a cast-in-place deck.	Observations: 45 degree cracks are seen starting at each corner of the bridge and continue to the centerline of the bridge. The casting of the bridge deck was not coincided with the pick points. This caused cracking of the deck and parapets. The cracks in the deck are leaking and the parapet cracks show no signs of leakage. The uphill joint is wide open and allowed significant moisture ingress. The bridge was inspected three years after construction. (Culmo 2010)

I-80; State Street to 1300 East, Utah, Built 2008		
The superstructure was precast and moved into place using the SPMT.	The bridge is single span. The superstructure consists of steel girders and a cast-in-place deck.	Observations: 45 degree cracks are seen starting at each corner of the bridge and continue to the centerline of the bridge. The casting of the bridge deck was not coincided with the pick points. The deck cracks are leaking. The cracking in the adjacent span indicates that the leakage is due to shrinkage cracks and not due to the stresses from the SPMT move. The bridge was inspected two years after construction. (Culmo 2010)

I-80; State Street to 1300 East, Utah, Built 2008		
The superstructure was precast and moved into place using the SPMT method.	The bridge's superstructure consists of steel girders and cast-in-place deck. The bridge is single span.	Observations: 45 degree cracks are seen starting at each corner of the bridge and continue to the centerline of the bridge. The casting of the bridge deck was not coincided with the pick points. The deck cracks are leaking. The cracking in the adjacent span indicates that the leakage is due to shrinkage cracks and not due to the stresses from the SPMT move. The bridge was inspected two years after construction. (Culmo 2010)

3300 South over I-215 East, Utah, Built 2008		
The ABC technique used was a precast superstructure with a SPMT move.	The single span bridge superstructure consists of steel girders and a cast-in-place deck.	Observations: Minor 45 degree cracking has occurred at the exterior and interior corner bays of the bridge. Minor leakage has occurred at these cracks but do not seem to be worsening. No overlay was applied; the cast –in-place concrete deck is bare. The pick points did not coincide with the casting support, therefore creaking occurred in the deck and the parapets. Due to the pick points being closer to the ends and the use of light weight concrete in the deck, the cracks were minimal in comparison to other SPMT moved bridges. The cracks that formed are leaking only due to there being no waterproofing system in place. The bridge was inspected two years after construction. (Culmo 2010)

I-80 over Lambs Canyon Road, Utah, Built 2008		
The ABC technique used was a SPMT move.	The single span bridge consists of AASHTO I-Girders and a cast-in-place deck.	Observations: The pick points and the casting supports were coincided. This resulted in nearly nonexistent cracks. The approach slab joints at the abutments are failing and will need repairs. The bridge was inspected two years after construction. (Culmo 2010)

I-15; Widening, 500 North to I-215, Utah, Built 2009		
The ABC techniques used was a precast superstructure and an SPMT move.	The superstructure of the bridge was a bulb tee with a cast-in-place deck. The bridge consists of two spans.	Observations: The pick points were close to the ends of the bridge and resulted in minimal cracking in the deck and parapets. Efflorescence is seen at these cracks. (Culmo 2010)

I-80; Two Bridges near Echo Junction, Utah, Built 2009		
The ABC techniques used was a prefabricated superstructure and a lateral slide-in.	The single span bridge superstructure consists of AASHTO I girder with a cast-in-place deck.	Observations: Minimal cracking seen on the underside of the deck. The approach slabs were placed before the slide-in and minimal cracking is seen in those as well. The bridge is in excellent condition still. The bridge was inspected a year after construction of the bridge. (Culmo 2010)