Form No. DTMB-3521 (Rev. 10/2015)
AUTHORITY: Act 431 of 1984
COMPLETION: Required
PENALTY: Contract change will not be executed unless form is filed

STATE OF MICHIGAN

DEPARTMENT OF TECHNOLOGY, MANAGEMENT & BUDGET

PROCUREMENT

525 W. ALLEGAN STREET
LANSING, MI 48933

P.O. BOX 30026
LANSING, MI 48909

CHANGE NOTICE NO. 2
to
CONTRACT NO. 071B2200197
between
THE STATE OF MICHIGAN
and

NAME & ADDRESS OF CONTRACTOR	PRIMARY CONTACT	EMAIL
Lightle Enterprises Of Ohio, Llc	David Lightle	dlightle@lightleenterprises.com
21 W. Walnut	PHONE	CONTRACTOR'S TAX ID NO. (LAST FOUR DIGITS ONLY)
Frankford OH, 45628	740-998-5363	*****5704

STATE CONTACTS	AGENCY	NAME	PHONE	EMAIL
PROGRAM MANAGER / CCI		Droste, Justin	517-636-0518	droste, justin@Michigan.gov
CONTRACT ADMINISTRATOR	DTMB	Malu Natarajan	(517) 284-7030	NatarajanM@michigan.gov

CONTRACT SUMMARY			
DESCRIPTION: Extruded Aluminum Panels			
INITIAL EFFECTIVE DATE	INITIAL EXPIRATION DATE	INITIAL AVAILABLE OPTIONS	EXPIRATION DATE BEFORE CHANGE(S) NOTED BELOW
June 1, 2012	May 31, 2015	2 - 1 Year	May 31, 2016
PAYMENT TERMS		DELIVERY TIMEFRAME	
1% 15, Net 45		30 days	
ALTERNATE PAYMENT OPTIONS			EXTENDED PURCHASING
☐ P-card ☐ Direct Voucher (DV) ☐ Other			☐ Yes ☒No
MINIMUM DELIVERY REQUIREMENTS			
100 pieces			

DESCRIPTION OF CHANGE NOTICE				
EXERCISE OPTION?	LENGTH OF OPTION	EXERCISE EXTENSION?	LENGTH OF EXTENSION	REVISED EXP. DATE
☒	One Year	☐		May 31, 2017
CURRENT VALUE	VALUE OF CHANGE NOTICE	ESTIMATED AGGREGATE CONTRACT VALUE		
$ 211,310.00	$ 150,000.00	$ 361,310.00		

DESCRIPTION: Effective June 1, 2016, this contract is exercising the second option year and is increased by $150,000.00. The revised contract expiration date is May 31, 2017. All other terms, conditions, specifications, and pricing remain the same. Per agency request, DTMB Procurement approval, and State Administrative Board approval on April 5, 2016.

Form No. DTMB-3521 (Rev. 5/2015)
AUTHORITY: Act 431 of 1984
COMPLETION: Required
PENALTY: Contract change will not be executed unless form is filed

STATE OF MICHIGAN
DEPARTMENT OF TECHNOLOGY, MANAGEMENT AND BUDGET
PROCUREMENT
P.O. BOX 30026, LANSING, MI 48909
OR
525 W. ALLEGAN, LANSING, MI 48933

CHANGE NOTICE NO. 1
to
CONTRACT NO. 071B2200197
between
THE STATE OF MICHIGAN
and

NAME & ADDRESS OF CONTRACTOR	PRIMARY CONTACT	EMAIL
Lightle Enterprises of Ohio, LLC	David Lightle	dlightle@lightleenterprises.com
21 W Walnut Street	**PHONE**	**VENDOR TAX ID # (LAST FOUR DIGITS ONLY)**
Frankfort, OH 45628	740-998-5363	5704

STATE CONTACTS	AGENCY	NAME	PHONE	EMAIL
PROGRAM MANAGER / CCI	MDOT	Justin Droste	517-636-0518	DrosteJ@michigan.gov
CONTRACT ADMINISTRATOR	DTMB	Valerie Hiltz	517-248-7026	HiltzV@michigan.gov

CONTRACT SUMMARY

DESCRIPTION: Extruded Aluminum Panels- Michigan Department of Transportation (MDOT)

INITIAL EFFECTIVE DATE	INITIAL EXPIRATION DATE	INITIAL AVAILABLE OPTIONS	EXPIRATION DATE BEFORE CHANGE(S) NOTED BELOW
June 1, 2012	May 31, 2015	Two- One Year Options	May 31, 2015
PAYMENT TERMS	**F.O.B.**	**SHIPPED TO**	
1% 15, Net 45	Destination	As Required	

ALTERNATE PAYMENT OPTIONS	EXTENDED **PURCHASING**
☐ P-card ☐ Direct Voucher (DV) ☐ Other	☐ Yes ☒ No

MINIMUM DELIVERY REQUIREMENTS

100 Pieces

DESCRIPTION OF CHANGE NOTICE

EXTEND CONTRACT EXPIRATION DATE	EXERCISE CONTRACT OPTION YEAR(S)	EXTENSION BEYOND CONTRACT OPTION YEARS	LENGTH OF EXTENSION/**OPTION**	EXPIRATION DATE AFTER CHANGE
☐ No ☒ Yes	☒	☐	One Year	May 31, 2016

CURRENT VALUE	VALUE/COST OF CHANGE NOTICE	ESTIMATED REVISED AGGREGATE CONTRACT VALUE
$161,310.00	$50,000.00	$211,310.00

DESCRIPTION:

Effective June 1, 2015 this contract is EXERCISING the first option year and is hereby INCREASED by $50,000.00 for MDOT use. The revised Contract expiration date is May 31, 2016. The minimum delivery requirement has been INCREASED to 100 pieces. Please note that the buyer is changed to Valerie Hiltz, DTMB-Procurement. The Program Manager/CCI is changed to Justin Droste, MDOT. All other terms, conditions, pricing and specifications remain the same. Per agency request, vendor agreement, and approval from DTMB- Procurement.

Form No. DTMB-3521 (Rev. 4/2012)
AUTHORITY: Act 431 of 1984
COMPLETION: Required
PENALTY: Contract change will not be executed unless form is filed

STATE OF MICHIGAN
DEPARTMENT OF TECHNOLOGY, MANAGEMENT AND BUDGET
PROCUREMENT
P.O. BOX 30026, LANSING, MI 48909
OR
530 W. ALLEGAN, LANSING, MI 48913

June 6, 2012

NOTICE
OF
CONTRACT NO. 071B2200197
Between
THE STATE OF MICHIGAN
And

NAME & ADDRESS OF CONTRACTOR:	PRIMARY CONTACT	EMAIL
Lightle Enterprises of Ohio, LLC	**David Lightle**	**dlightle@lightleenterprises.com**
21 W Walnut St	TELEPHONE	CONTRACTOR #, MAIL CODE
Frankford, OH 45628	**740-998-5363**	

STATE CONTACTS	AGENCY	NAME	PHONE	EMAIL
CONTRACT COMPLIANCE INSPECTOR:	**DTMB**	**Tim Croze**	**517-322-3394**	**crozet@michigan.gov**
BUYER:	**DTMB**	**Kristen Robel**	**517-373-7396**	**RobelK@michigan.gov**

CONTRACT SUMMARY:			
DESCRIPTION: **Extruded Aluminum Panels – Michigan Department of Transportation**			
INITIAL TERM	EFFECTIVE DATE	INITIAL EXPIRATION DATE	AVAILABLE OPTIONS
3 Years	**June 1, 2012**	**May 31, 2015**	**2, One Year**
PAYMENT TERMS	F.O.B	SHIPPED	SHIPPED FROM
1% 15, Net 45	**Destination**	**30 Days A.R.O.**	**Frankford, OH**
ALTERNATE PAYMENT OPTIONS:			AVAILABLE TO MiDEAL PARTICIPANTS
☐ P-card ☐ Direct Voucher (DV) ☐ Other			☐ YES ☒ NO
MINIMUM DELIVERY REQUIREMENTS:			
N/A			
MISCELLANEOUS INFORMATION:			
ESTIMATED CONTRACT VALUE AT TIME OF EXECUTION:			**$161,310.00**

The terms and conditions of this Contract are attached.

Form No. DTMB-3521 (Rev. 4/2012)
AUTHORITY: Act 431 of 1984
COMPLETION: Required
PENALTY: Contract change will not be executed unless form is filed

STATE OF MICHIGAN
DEPARTMENT OF TECHNOLOGY, MANAGEMENT AND BUDGET
PROCUREMENT
P.O. BOX 30026, LANSING, MI 48909
OR
530 W. ALLEGAN, LANSING, MI 48913

CONTRACT NO. 071B2200197

Between

THE STATE OF MICHIGAN

And

NAME & ADDRESS OF CONTRACTOR:	PRIMARY CONTACT	EMAIL
Lightle Enterprises of Ohio, LLC	**David Lightle**	dlightle@lightleenterprises.com
21 W Walnut St	TELEPHONE	CONTRACTOR #, MAIL CODE
Frankford, OH 45628	**740-998-5363**	

STATE CONTACTS	AGENCY	NAME	PHONE	EMAIL
CONTRACT COMPLIANCE INSPECTOR:	**DTMB**	**Tim Croze**	**517-322-3394**	crozet@michigan.gov
BUYER:	**DTMB**	**Kristen Robel**	**517-373-7396**	RobelK@michigan.gov

CONTRACT SUMMARY:			
DESCRIPTION: **Extruded Aluminum Panels – Michigan Department of Transportation**			
INITIAL TERM	EFFECTIVE DATE	INITIAL EXPIRATION DATE	AVAILABLE OPTIONS
3 Years	**June 1, 2012**	**May 31, 2015**	**2, One Year**
PAYMENT TERMS	F.O.B	SHIPPED	SHIPPED FROM
1% 15, Net 45	Destination	30 Days A.R.O.	Frankford, OH
ALTERNATE PAYMENT OPTIONS:			AVAILABLE TO MiDEAL PARTICIPANTS
☐ P-card ☐ Direct Voucher (DV) ☐ Other			☐ YES ☒ NO
MINIMUM DELIVERY REQUIREMENTS:			
N/A			
MISCELLANEOUS INFORMATION:			
The terms and conditions of this Contract are those of ITB # 071I2200104, this Contract Agreement and the vendor's quote. In the event of any conflicts between the specifications, and terms and conditions, indicated by the State and those indicated by the vendor, those of the State take precedence.			
ESTIMATED CONTRACT VALUE AT TIME OF EXECUTION:	$161,310.00		

THIS IS NOT AN ORDER: This Contract Agreement is awarded on the basis of our inquiry bearing the ITB No. 071I2200104. Orders for delivery will be issued directly by the Department of Technology, Management & Budget through the issuance of a Purchase Order Form.

All terms and conditions of the invitation to bid are made a part hereof.

FOR THE CONTRACTOR:	FOR THE STATE:
Lightle Enterprises of Ohio, LLC	Signature Jeff Brownlee Chief Procurement Officer
Authorized Agent Signature	Name/Title
Authorized Agent (Print or Type)	DTMB/Procurement
Date	Date

Table of Contents

Definitions **10**

Article 1 – Statement of Work ***11***

1.1 Project Identification **11**
1.1.1 Project Request 11
1.1.2 Background- Deleted, Not Applicable 11

1.2 Scope of Work and Deliverable(s) **11**
1.2.1 In Scope – Deleted, Not Applicable 11
1.2.2 Deliverable(s) 11
1.2.3 Quantity 11
1.2.4 Ordering 11
1.2.5 Alternate Bids – Deleted – Not Applicable 11

1.3 Management and Staffing **11**
1.3.1 Project Management- Deleted - Not Applicable 11
1.3.2 Reports- Deleted - Not Applicable 11
1.3.3 Staff, Duties, and Responsibilities- Deleted - Not Applicable 11
1.3.4 Meetings 11
1.3.5 Place of Performance 12
1.3.6 Reserved 12
1.3.7 Binding Commitments- Deleted - Not Applicable 12
1.3.8 Training- Delete - Not Applicable 12
1.3.9 Security 12

1.4 Delivery and Acceptance **12**
1.4.1 Time Frames 12
1.4.2 Minimum Order 12
1.4.3 Packaging 12
1.4.4 Palletizing 12
1.4.5 Delivery Term 12
1.4.6 Acceptance Process 13
1.4.7 Criteria 13

1.5 Proposal Pricing **13**
1.5.1 Pricing 13
1.5.2 Quick Payment Terms 13
1.5.3 Price Term 13
1.5.4 Tax Excluded from Price 13
1.5.5 Invoices 13
1.6 Commodity Requirements- 13
1.6.1 Customer Service 13
1.6.2 Research and Development- Deleted – Not Applicable 14
1.6.3 Quality Assurance Program- Deleted – Not Applicable 14
1.6.4 Warranty for Deliverable(s) – Deleted – Not Applicable 14
1.6.5 Special Incentives – Deleted – Not Applicable 14
1.6.6 Energy Efficiency- Deleted – Not Applicable 14
1.6.7 Environmental Requirements – Deleted – Not Applicable 14
1.6.8 Recycled Content and Recyclability – Deleted – Not Applicable 14
1.6.9 Materials Identification and Tracking 14

1.7 Extended Purchasing – Deleted – Not Applicable **14**
1.7.1 MiDEAL – Deleted – Not Applicable 14
1.7.2 State Employee Purchases- Deleted, Not Applicable 14

Article 2 – Terms and Conditions ***15***

2.1 Contract Term 15
2.1.1 Contract Term 15
2.1.2 Options to Renew 15

2.2 Payments and Taxes 15
2.2.1 Fixed Prices for Deliverable(s) 15
2.2.2 Payment Deadlines 15
2.2.3 Invoicing and Payment – In General –Deleted - Not Applicable 15
2.2.4 Pro-ration – Deleted - Not Applicable 15
2.2.5 Final Payment and Waivers 15
2.2.6 Electronic Payment Requirement 15
2.2.7 Employment Taxes 15
2.2.8 Sales and Use Taxes 15

2.3 Contract Administration 16
2.3.1 Issuing Office 16
2.3.2 Contract Compliance Inspector 16
2.3.3 Project Manager – Deleted – Not Applicable 16
2.3.4 Contract Changes 16
2.3.5 Price Changes 16
2.3.6 Notices 17
2.3.7 Covenant of Good Faith 17
2.3.8 Assignments 17
2.3.9 Equipment 18
2.3.10 Facilities -Deleted, Not Applicable 18

2.4 Contract Management 18
2.4.1 Contractor Personnel Qualifications 18
2.4.2 Contractor Key Personnel 18
2.4.3 Removal or Reassignment of Personnel at the State's Request 18
2.4.4 Contractor Personnel Location – Deleted – Not Applicable 18
2.4.5 Contractor Identification 18
2.4.6 Cooperation with Third Parties 18
2.4.7 Relationship of the Parties 18
2.4.8 Contractor Return of State Equipment/Resources 18
2.4.9 Background Checks 19
2.4.10 Compliance With State Policies 19

2.5 Subcontracting by Contractor 19
2.5.1 Contractor Responsible 19
2.5.2 State Approval of Subcontractor 19
2.5.3 Subcontract Requirements 19
2.5.4 Competitive Selection 19

2.6 Reserved 19

2.7 Performance 19
2.7.1 Time of Performance 19
2.7.2 Service Level Agreements –Deleted - Not Applicable 20
2.7.3 Liquidated Damages – Deleted – Not Applicable 20
2.7.4 Excusable Failure 20

2.8 Acceptance of Deliverable(s) 20
2.8.1 Quality Assurance 20
2.8.2 Delivery Responsibilities 20
2.8.3 Process for Acceptance of Deliverable(s) 21
2.8.4 Acceptance of Deliverable(s) 21
2.8.5 Process for Approval of Written Deliverable(s) –Deleted - Not Applicable 21

2.8.6 Process for Approval of Services –Deleted - Not Applicable 21
2.8.7 Final Acceptance 21

2.9 Ownership –Deleted - Not Applicable 21

2.10 State Standards –Deleted - Not Applicable 21

2.11 Confidentiality 22
2.11.1 Confidential Information 22
2.11.2 Protection and Destruction of Confidential Information 22
2.11.3 Exclusions 22
2.11.4 No Obligation to Disclose 22
2.11.5 Security Breach Notification 22

2.12 Records and Inspections 22
2.12.1 Inspection of Work Performed 23
2.12.2 Retention of Records 23
2.12.3 Examination of Records 23
2.12.4 Audit Resolution 23
2.12.5 Errors 23

2.13 Warranties 23
2.13.1 Warranties and Representations 23
2.13.2 Warranty of Merchantability 24
2.13.3 Warranty of Fitness for a Particular Purpose 24
2.13.4 Warranty of Title – Deleted – Not Applicable 24
2.13.5 Equipment Warranty – Deleted – Not Applicable 24
2.13.6 New Deliverable(s) 24
2.13.7 Prohibited Products 24
2.13.8 Consequences For Breach 24

2.14 Insurance 24
2.14.1 Liability Insurance 24
2.14.2 Subcontractor Insurance Coverage 26
2.14.3 Certificates of Insurance and Other Requirements 27

2.15 Indemnification 27
2.15.1 General Indemnification 27
2.15.2 Code Indemnification – Deleted - Not Applicable 27
2.15.3 Employee Indemnification 27
2.15.4 Patent/Copyright Infringement Indemnification 27
2.15.5 Continuing Obligation 28
2.15.6 Indemnification Procedures 28
2.15.7 Limitation of Liability 28

2.16 Termination by the State 28
2.16.1 Notice and Right to Cure 28
2.16.2 Termination for Cause 29
2.16.3 Termination for Convenience 29
2.16.4 Termination for Non-Appropriation 29
2.16.5 Termination for Criminal Conviction 29
2.16.6 Termination for Approvals Rescinded 30
2.16.7 Rights and Obligations upon Termination 30
2.16.8 Reservation of Rights 30
2.16.9 Contractor Transition Responsibilities 30
2.16.10 Transition Payments 30

2.17 Termination by the Contractor 31
2.17.1 Termination 31

2.18 Stop Work – Deleted – Not Applicable 31
2.18.1 Stop Work Order – Deleted – Not Applicable 31
2.18.2 Termination of Stop Work Order – Deleted – Not Applicable 31
2.18.3 Allowance of the Contractor's Costs – Deleted – Not Applicable 31

2.19 Reserved 31

2.20 Dispute Resolution 31
2.20.1 General 31
2.20.2 Informal Dispute Resolution 31
2.20.3 Injunctive Relief 32
2.20.4 Continued Performance 32

2.21 Disclosure Responsibilities 32
2.21.1 Disclosure of Litigation 32
2.21.2 Other Disclosures 32
2.21.3 Call Center Disclosure – Deleted – Not Applicable 32

2.22 Extended Purchasing 32
2.22.1 MiDEAL Requirements – Deleted – Not Applicable 32
2.22.2 State Administrative Fee – Deleted – Not Applicable 32
2.22.3 State Employee Purchase Requirements- Deleted - Not Applicable 32

2.23 Laws 33
2.23.1 Governing Law 33
2.23.2 Compliance with Laws 33
2.23.3 Jurisdiction 33
2.23.4 Nondiscrimination 33
2.23.5 Unfair Labor Practices 33
2.23.6 Environmental Provision 33
2.23.7 Freedom of Information 34
2.23.8 Workplace Safety and Discriminatory Harassment – Deleted - Not Applicable 34
2.23.9 Prevailing Wage – Deleted - Not Applicable 34
2.23.10 Abusive Labor Practices 34

2.24 General Provisions 34
2.24.1 Bankruptcy and Insolvency 34
2.24.2 Media Releases 34
2.24.3 Contract Distribution 34
2.24.4 Permits 34
2.24.5 Website Incorporation 34
2.24.6 Future Bidding Preclusion – Deleted - Not Applicable 35
2.24.7 Antitrust Assignment 35
2.24.8 Disaster Recovery 35
2.24.9 Legal Effect 35
2.24.10 Entire Agreement 35
2.24.11 Order of Precedence 35
2.24.12 Headings 35
2.24.13 Form, Function and Utility– Deleted - Not Applicable 35
2.24.14 Reformation and Severability 35
2.24.15 Approval 35
2.24.16 No Waiver of Default 35
2.24.17 Survival 35

Attachment A, Pricing 36

Attachment B, MDOT Standard Specifications for Construction 37

Definitions

This section provides definitions for terms used throughout this document.

Business Day - whether capitalized or not, means any day other than a Saturday, Sunday, State employee temporary layoff day, or State-recognized legal holiday (as identified in the Collective Bargaining Agreement for State employees) from 8:00am through 5:00pm Eastern Time unless otherwise stated.

Buyer – the DTMB-Procurement employee identified on the cover page of this Contract.

Chronic Failure - as defined in applicable Service Level Agreements.

Contract – based on the ITB, an agreement that has been approved and executed by the awarded bidder, the DTMB-Procurement Director, and the State Administrative Board.

Contractor – the awarded bidder after the Effective Date.

Days - Business Days unless otherwise specified.

Deleted, Not Applicable - the section is not applicable or included in this Contract. This is used as a placeholder to maintain consistent numbering.

Deliverable(s) - physical goods or commodities as required or identified in a Statement of Work.

Eastern Time – either Eastern Standard Time or Eastern Daylight Time, whichever is prevailing in Lansing, Michigan.

Effective Date - the date that a binding contract is executed by the final party.

Final Acceptance - has the meaning provided in Section 2.8.7, Final Acceptance, unless otherwise stated in Article 1.

Key Personnel - any personnel designated as Key Personnel in Sections 1.3.3, Staff, Duties, and Responsibilities, and 2.4.2, Contractor Key Personnel, subject to the restrictions of Section 2.4.2.

Post-Industrial Waste - industrial by-products which would otherwise go to disposal and wastes generated after completion of a manufacturing process, but does not include internally generated scrap commonly returned to industrial or manufacturing processes.

Purchase Order - a written document issued by the State that requests full or partial performance of this Contract.

State - the State of Michigan.

State Location - any physical location where the State performs work. State Location may include state-owned, leased, or rented space.

Stop Work Order - a notice requiring the Contractor to fully or partially stop work in accordance with the terms of the notice.

Subcontractor - a company or person that the Contractor delegates performance of a portion of the Deliverable(s) to, but does not include independent contractors engaged by the Contractor solely in a staff augmentation role.

Unauthorized Removal - the Contractor's removal of Key Personnel without the prior written consent of the State.

Article 1 – Statement of Work

1.1 Project Identification

This Contract is for the purchase of extruded aluminum panels used for making highway signs. The specifications and scope of work and all terms and conditions are attached.

1.1.1 Project Request

This Statement of Work (SOW) is for extruded aluminum sign planks.

1.1.2 Background- Deleted, Not Applicable

1.2 Scope of Work and Deliverable(s)

1.2.1 In Scope – Deleted, Not Applicable

1.2.2 Deliverable(s)

Contractor must provide the following Deliverable(s):

- Extruded Aluminum sign plank with holes punched
- Column supported
- Butt-type edge
- Extruded aluminum of alloy 6063 -T6
- Conforming to ASTM B 221
- In compliance with 2012 MDOT Standard Specifications for Construction 919.02 and Table 919-1 and 919-2 (Attachment B)
- **Size: 12"x30' with holes punched and 6”x30’ with holes punched.**

1.2.3 Quantity

The State is not obligated to purchase in any specific quantity.

1.2.4 Ordering

The State will issue a Purchase Order, which must be approved by the Contract Compliance Inspector, to order any Deliverable(s). The Contractor is not authorized to begin performance until receipt of a Purchase Order.

1.2.5 Alternate Bids – Deleted – Not Applicable

1.3 Management and Staffing

1.3.1 Project Management- Deleted - Not Applicable

1.3.2 Reports- Deleted - Not Applicable

1.3.3 Staff, Duties, and Responsibilities- Deleted - Not Applicable

1.3.4 Meetings

The State may request a kick-off meeting with the Contractor within thirty (30) days of the Effective Date. The State may request other meetings as it deems appropriate.

1.3.5 Place of Performance

Full address of place of performance	Owner/operator of facility to be used	Percent (%) of Contract value to be performed at listed location
Mid America Extrusions 4425 Aluminum drive Indianapolis, IN 46218	Extruder of the Panels	80%
Osburn Associates PO Box 912 Logan, OH 43138	Chromate Conversion Coating	20%

1.3.6 Reserved

1.3.7 Binding Commitments- Deleted - Not Applicable

1.3.8 Training- Delete - Not Applicable

1.3.9 Security

The Contractor may be required to make frequent deliveries to State facilities.

The State may decide to perform an additional background check under Section 2.4.9, Background Checks. If so, the Contractor must provide a list of all personnel, including name and date of birth that will be assigned to State work.

1.4 Delivery and Acceptance

1.4.1 Time Frames

All Deliverable(s) must be delivered within 30 Days after receipt of order. The receipt of order date is governed in the same manner as notices sent under Section 2.3.6, Notices.

1.4.2 Minimum Order

The minimum order is 10 pieces.

1.4.3 Packaging

Material shall be shipped on trucks or trailers with removable side rails to allow access of a fork truck to facilitate removal of panels from delivery truck. Bundles shall be securely banded and each bundle shall not weight more than 2000 pounds.

1.4.4 Palletizing

Shipments must be palletized whenever possible. Manufacturer's standard 4-way shipping pallets must be used.

1.4.5 Delivery Term

Unless specified otherwise below, delivery is governed by Section 2.8.2, Delivery Responsibilities.

Prices are "F.O.B. Destination" with transportation charges prepaid on all orders that meet the minimum order requirement specified in Section 1.4.2, Minimum Order.

If the Contractor fails to follow these shipping instructions, the State will pay the carrier used and deduct the difference from the Contractor's invoice for the amount that was charged and the amount that would have been charged if the required carrier had been used.

1.4.6 Acceptance Process

The acceptance process is defined in Section 2.8.4, Acceptance of Deliverable(s), unless otherwise defined in this section.

1.4.7 Criteria

The State will use the following criteria to determine acceptance of Deliverable(s):

The Contractor must provide certification, as defined in the Michigan Department of Transportation Materials Quality Assurance Manual, that the material furnished meets the requirements of the specifications for extruded aluminum panels. MDOT reserves the right to sample and test the material on a random basis at the final point of delivery.

1.5 Proposal Pricing

1.5.1 Pricing

Prices are fixed for all Deliverable(s) as required by Section 2.2.1, Fixed Prices for Deliverable(s). Pricing details are in **Attachment A**.

1.5.2 Quick Payment Terms

The Contractor will offer 1% off an invoice if paid within 15 days from the State's receipt of the invoice or delivery of the Deliverables, whichever is later.

1.5.3 Price Term

Prices in **Attachment A** are firm with prospective renegotiation at an agreed upon time. The criteria for a re-determination of pricing are under Section 2.3.5, Price Changes.

1.5.4 Tax Excluded from Price

(a) Sales Tax: The State is exempt from sales tax for direct purchases. The Contractor's prices must not include sales tax. DTMB-Procurement will furnish exemption certificates for sales tax upon request.

(b) Federal Excise Tax: The State may be exempt from Federal Excise Tax, or the taxes may be reimbursable, if articles purchased under any resulting Contract are used for the State's exclusive use. Certificates showing exclusive use for the purposes of substantiating a tax-free, or tax-reimbursable sale will be sent upon request. If a sale is tax exempt or tax reimbursable under the Internal Revenue Code, the Contractor's prices must not include the Federal Excise Tax.

1.5.5 Invoices

The Contractor's invoice should include the following:

(a) Date
(b) PO #
(c) Quantity
(d) Deliverable
(e) Unit Price
(f) Shipping Cost (if any)
(g) Total Price

1.6 Commodity Requirements-

1.6.1 Customer Service

David R. Lightle is the individual that will respond to State agency inquires. He can be reached by calling 855-654-1165.

Contractor requires a 20% restocking fee for all returns.

The Contractor's normal business hours for receiving orders and providing customer service is 8:00 A.M. – 5:00 P.M. Eastern Time Zone, Monday-Friday.

After hours customer service needs can be addressed by calling David R Lightle at 740-703-6740.

1.6.2 Research and Development- Deleted – Not Applicable

1.6.3 Quality Assurance Program- Deleted – Not Applicable

1.6.4 Warranty for Deliverable(s) – Deleted – Not Applicable

1.6.5 Special Incentives – Deleted – Not Applicable

1.6.6 Energy Efficiency- Deleted – Not Applicable

1.6.7 Environmental Requirements – Deleted – Not Applicable

1.6.8 Recycled Content and Recyclability – Deleted – Not Applicable

1.6.9 Materials Identification and Tracking

(a) **Hazardous Chemical Identification**. Each hazardous chemical must be properly identified, including any applicable identification number, such as a National Stock Number or Special Item Number. Material Safety Data Sheets must be submitted in accordance with the federal Emergency Planning and Community Right-to-Know Act, 42 USC 11001 *et seq.*, as amended. This list must be updated whenever any other chemical to be delivered is hazardous.

Chemical (if none, enter 'None')	Identification Number
None	

(b) **Mercury Content**. The Contractor confirms that their deliverables do not contain mercury.

(c) **Brominated Flame Retardants**. The Contractor confirms that their deliverables do not contain Brominated Flame Retardants.

(d) **Environmental Permits and Requirements**. The Contractor must immediately notify DTMB-Procurement of the receipt of any EPA, State, or local agency communication indicating that any of the Contractor's facilities are in violation of applicable environmental laws.

1.7 Extended Purchasing – Deleted – Not Applicable

1.7.1 MiDEAL – Deleted – Not Applicable

1.7.2 State Employee Purchases- Deleted, Not Applicable

Article 2 – Terms and Conditions

2.1 Contract Term

2.1.1 Contract Term

This Contract term begins June 1, 2012 and expires May 31, 2015. All outstanding Purchase Orders will expire upon the termination of this Contract for any of the reasons listed in Section 2.16, Termination by the State, unless otherwise agreed to in writing by DTMB-Procurement. Absent an early termination, Purchase Orders issued, but not expired, by the end of this Contract's term will remain in effect until the next September 30.

2.1.2 Options to Renew

This Contract may be renewed for up to two (2) additional one (1) year period(s). Renewal must be by mutual written agreement of the parties, not less than 30 days before expiration of this Contract.

2.2 Payments and Taxes

2.2.1 Fixed Prices for Deliverable(s)

Prices are fixed for all Deliverable(s).

2.2.2 Payment Deadlines

Undisputed invoices will be due and payable by the State, in accordance with the State's standard payment procedure as specified in 1984 PA 279, MCL 17.51 *et seq.*, within 45 days after receipt.

2.2.3 Invoicing and Payment – In General –Deleted - Not Applicable

2.2.4 Pro-ration – Deleted - Not Applicable

2.2.5 Final Payment and Waivers

The Contractor's acceptance of final payment by the State constitutes a waiver of all claims by the Contractor against the State for payment under this Contract, other than those claims previously filed in writing on a timely basis and still disputed. For other claims, final payment by the State will not constitute a waiver by either party of any rights as to the other party's continuing obligations, nor will it constitute a waiver of any claims under this Contract, including claims for Deliverable(s) not reasonably known to be defective or substandard.

2.2.6 Electronic Payment Requirement

As required by MCL 18.1283a, the Contractor must electronically register with the State at http://www.michigan.gov/cpexpress to receive electronic fund transfer (EFT) payments.

2.2.7 Employment Taxes

The Contractor must collect and pay all applicable federal, state, and local employment taxes.

2.2.8 Sales and Use Taxes

The Contractor must register and remit sales and use taxes on taxable sales of tangible personal property or services delivered into the State. If the Contractor lacks sufficient presence in Michigan to be required to register and pay taxes, it must do so on a voluntary basis. The requirement to register and remit sales and use taxes extends to (a) all members of a "controlled group of corporations" as defined in § 1563(a) of the Internal Revenue Code, 26 USC 1563(a), and applicable regulations; and (b) all organizations under common control that make sales at retail for delivery into the State. Any United States Department of Treasury regulation that references "two or more trades or businesses under common control" includes organizations such as sole proprietorships, partnerships (as defined in § 7701(a)(2) of the Internal Revenue Code, 26 USC 7701(a)(2)), trusts, estates, corporations, or limited liability companies.

2.3 Contract Administration

2.3.1 Issuing Office

This Contract is issued by DTMB-Procurement on behalf of the Michigan Department of State (State). **DTMB-Procurement is the only entity authorized to modify the terms and conditions of this Contract, including the prices and specifications.** The Contract Administrator within DTMB-Procurement for this Contract is:

Kristen Robel
Procurement
Department of Technology, Management and Budget
Mason Bldg, 2nd Floor
PO Box 30026
Lansing, MI 48909
RobelK@michigan.gov
Phone: 517-373-7396

2.3.2 Contract Compliance Inspector

The Contract Compliance Inspector, named below, will monitor and coordinate Contract activities on a day-to-day basis. However, monitoring of this Contract implies **no authority to modify the terms and conditions of this Contract, including the prices and specifications.**

Tim Croze
Department of Transportation
6333 Old Lansing Rd
crozet@michigan.gov
Phone: 517-322-3394
Fax: 517-322-3385

2.3.3 Project Manager – Deleted – Not Applicable

2.3.4 Contract Changes

(a) If the State requests or directs the Contractor to provide any Deliverable(s) that the Contractor believes are outside the scope of the Contractor's responsibilities under this Contract, the Contractor must notify the State before performing the requested activities. If the Contractor fails to notify the State, any activities performed will be considered in-scope and not entitled to additional compensation or time. If the Contractor begins work outside the scope of this Contract and then ceases performing that work, the Contractor must, at the request of the State, retract any out-of-scope work that would adversely affect this Contract.

(b) The State or the Contractor may propose changes to this Contract. If the Contractor or the State requests a change to the Deliverable(s) or if the State requests additional Deliverable(s), the Contractor must provide a detailed outline of all work to be done, including tasks, timeframes, listing of key personnel assigned, estimated hours for each individual per Deliverable, and a complete and detailed cost justification. If the parties agree on the proposed change, DTMB-Procurement will prepare and issue a notice that describes the change, its effects on the Deliverable(s), and any affected components of this Contract (Contract Change Notice).

(c) No proposed change may be performed until DTMB-Procurement issues a duly executed Contract Change Notice for the proposed change.

2.3.5 Price Changes

If allowed by Section 1.5.3, Price Term, the State and the Contractor will complete a pricing review (Review) every 365 days following the Effective Date, to allow for changes based on actual costs incurred. Requested changes may include increases or decreases in price and must be accompanied by supporting information indicating market support of proposed modifications (such as the CPI and PPI, US City Average, as published by the US Department of Labor, Bureau of Labor Statistics).

(a) The State may request a Review upon 30 days written notice that specifies what Deliverable is being reviewed. At the Review, each party may present supporting information including information created by, presented, or received from third parties.

(b) Following the presentation of supporting information, both parties will have 30 days to review the supporting information and prepare any written response.

(c) In the event the Review reveals no need for modifications of any type, pricing will remain unchanged unless mutually agreed to by the parties. However, if the Review reveals that changes may be recommended, both parties will negotiate in good faith for 30 days unless extended by mutual agreement of the parties.

(d) If the supporting information reveals a reduction in prices is necessary and Contractor agrees to reduce rates accordingly, then the State may elect to exercise the next one year option, if available.

(e) If the supporting information reveals a reduction in prices is necessary and the parties are unable to reach agreement, then the State may eliminate all remaining Contract renewal options.

(f) Any changes based on the Review must be implemented through the issuance of a Contract Change Notice.

2.3.6 Notices

All notices and other communications required or permitted under this Contract must be in writing and will be considered given when delivered personally, by fax (if provided) or by e-mail (if provided), or by registered mail, return receipt requested, addressed as follows (or any other address that is specified in writing by either party):

If to State:

State of Michigan
DTMB-Procurement
Attention: Kristen Robel
PO Box 30026
530 West Allegan
Lansing, MI 48909
Robelk@michigan.gov
Fax: 517-335-0046

If to Contractor:
Lightle Enterprises of Ohio, LLC
Attn: David Lightle
P.O. Box 329
Frankfort, OH 45628
dlightle@lightleenterprises.com

Delivery by a nationally recognized overnight express courier will be treated as personal delivery.

2.3.7 Covenant of Good Faith

Each party must act reasonably and in good faith. Unless otherwise provided in this Contract, the parties will not unreasonably delay, condition or withhold their consent, decision, or approval any time it is requested or reasonably required in order for the other party to perform its responsibilities under this Contract.

2.3.8 Assignments

(a) Neither party may assign this Contract, or assign or delegate any of its duties or obligations under this Contract, to another party (whether by operation of law or otherwise), without the prior approval of the other party. The State may, however, assign this Contract to any other State agency, department, or division without the prior approval of the Contractor.

(b) If the Contractor intends to assign this Contract or any of the Contractor's rights or duties under this Contract, the Contractor must notify the State and provide adequate information about the assignee at least 90 days before the proposed assignment or as otherwise provided by law or court order. The State may withhold approval from proposed assignments, subcontracts, or novations if the State determines, in its sole discretion,

that the transfer of responsibility would decrease the State's likelihood of receiving performance on this Contract or the State's ability to recover damages.

(c) If the State permits an assignment of the Contractor's right to receive payments, the Contractor is not relieved of its responsibility to perform any of its contractual duties. All payments must continue to be made to one entity.

2.3.9 Equipment

The State will not provide equipment and resources unless specifically identified in the Statement(s) of Work or other Contract exhibits.

2.3.10 Facilities -Deleted, Not Applicable

2.4 Contract Management

2.4.1 Contractor Personnel Qualifications

All persons assigned by the Contractor to perform work must be employees of the Contractor or its majority-owned subsidiaries, or a State-approved Subcontractor, and must be fully qualified to perform the work assigned to them. The Contractor must include this requirement in any subcontract.

2.4.2 Contractor Key Personnel

The Contractor must provide the Contract Compliance Inspector with the names of Key Personnel.

2.4.3 Removal or Reassignment of Personnel at the State's Request

The State may require the Contractor to remove or reassign personnel if the State has legitimate, good-faith reasons articulated in a notice to the Contractor. Replacement personnel must be fully qualified for the position. If the State exercises this right, and the Contractor cannot immediately replace the removed personnel, the State agrees to an equitable adjustment in schedule or other terms that may be affected.

2.4.4 Contractor Personnel Location – Deleted – Not Applicable

2.4.5 Contractor Identification

The Contractor's employees must be clearly identifiable while on State property and must clearly identify themselves and the company they work for whenever making contact with State personnel by telephone or other means.

2.4.6 Cooperation with Third Parties

The Contractor and its Subcontractors must cooperate with the State and its agents and other contractors, including the State's quality assurance personnel. The Contractor must provide reasonable access to its personnel, systems, and facilities related to this Contract to the extent that access will not interfere with or jeopardize the safety or operation of the systems or facilities.

2.4.7 Relationship of the Parties

The relationship between the State and Contractor is that of client and independent contractor. No agent, employee, or servant of the Contractor, or any of its subcontractors, is an employee, agent or servant of the State. The Contractor will be solely and entirely responsible for its acts and the acts of its agents, employees, servants, and subcontractors during the performance of this Contract.

2.4.8 Contractor Return of State Equipment/Resources

The Contractor must return to the State any State-furnished equipment, facilities and other resources when no longer required for this Contract in the same condition as when provided by the State, reasonable wear and tear excepted.

2.4.9 Background Checks

The State may investigate the Contractor's personnel before granting access to State facilities and systems. The scope of the background check is at the discretion of the State and the results will be used to determine eligibility for working within State facilities and systems. The investigations will include a Michigan State Police background check (ICHAT) and may include a Criminal Justice Information Services (CJIS) fingerprint check. Proposed Contractor personnel may be required to complete and submit an RI-8 Fingerprint Card for the CJIS fingerprint check.

2.4.10 Compliance With State Policies

All Contractor personnel must comply with the State's security and acceptable use policies for State IT equipment and resources, available at http://www.michigan.gov/pcpolicy. Contractor personnel must agree to the State's security and acceptable use policies before the State grants access to its IT equipment and resources. The Contractor must provide these policies to prospective personnel before requesting access from the State. Contractor personnel must comply with all physical security procedures in State facilities.

2.5 Subcontracting by Contractor

2.5.1 Contractor Responsible

The Contractor is responsible for the completion of all Deliverable(s). The State will consider the Contractor to be the sole point of contact with regard to all contractual matters, including payment of any charges for Deliverable(s). The Contractor must make all payments to its Subcontractors or suppliers. Except as otherwise agreed in writing, the State is not obligated to make payments for the Deliverable(s) to any party other than the Contractor.

2.5.2 State Approval of Subcontractor

(a) The Contractor may not delegate any duties under this Contract to a Subcontractor unless DTMB-Procurement gives prior approval to the delegation. The State is entitled to receive copies of and review all subcontracts. The Contractor may delete or redact any proprietary information before providing it to the State.

(b) The State may require the Contractor to terminate and replace any Subcontractor the State reasonably finds unacceptable. The required replacement of a Subcontractor must be written and contain reasonable detail outlining the State's reasons. If the State exercises this right, and the Contractor cannot immediately replace the Subcontractor, the State will agree to an equitable adjustment in the schedule or other terms that may be affected by the State's required replacement. If this requirement results in a delay, the delay will not be counted against any applicable Service Level Agreement (SLA).

2.5.3 Subcontract Requirements

Except where specifically approved by the State, Contractor must include the obligations in Sections 2.24.2, Media Releases, 2.4, Contract Management, 2.11, Confidentiality, 2.12, Records and Inspections, 2.13, Warranties, 2.14, Insurance, and 2.23, Laws, in all of its agreements with Subcontractors.

2.5.4 Competitive Selection

Contractor must select Subcontractors (including suppliers) on a competitive basis to the maximum practical extent consistent with the objectives and requirements of this Contract.

2.6 Reserved

2.7 Performance

2.7.1 Time of Performance

(a) The Contractor must immediately notify the State upon becoming aware of any circumstances that may reasonably be expected to jeopardize the completion of any Deliverable(s) by the scheduled due dates in the latest State-approved delivery schedule and must inform the State of the projected actual delivery date.

(b) If the Contractor believes that a delay in performance by the State has caused or will cause the Contractor to be unable to perform its obligations according to specified Contract time periods, the Contractor must immediately notify the State and, to the extent practicable, continue to perform its obligations according to these Contract time periods. The Contractor will not be in default for a delay in performance to the extent the delay is caused by the State.

2.7.2 Service Level Agreements –Deleted - Not Applicable

2.7.3 Liquidated Damages – Deleted – Not Applicable

2.7.4 Excusable Failure

Neither party will be liable for any default, damage or delay in the performance of its obligations that is caused by government regulations or requirements, power failure, electrical surges or current fluctuations, war, forces of nature or acts of God, delays or failures of transportation, equipment shortages, suppliers' failures, acts or omissions of common carriers, fire, riots, civil disorders, labor disputes, embargoes, injunctions (provided the injunction was not issued as a result of any fault or negligence of the party seeking to have its default or delay excused), or any other cause beyond the reasonable control of a party; provided the non-performing party and any Subcontractors are without fault in causing the default or delay, and the default or delay could not have been prevented by reasonable precautions and cannot reasonably be circumvented by the non-performing party through the use of alternate sources, workaround plans, or other means, including disaster recovery plans.

If a party does not perform its contractual obligations for any of the reasons listed, the non-performing party will be excused from any further performance of its affected obligation(s) for as long as the circumstances prevail. The non-performing party must promptly notify the other party immediately after the excusable failure occurs, and when it abates or ends. Both parties must use commercially reasonable efforts to resume performance.

If any of the reasons listed substantially prevent, hinder, or delay the Contractor's performance of the Deliverable(s) for more than 10 Days, and the State reasonably determines that performance is not likely to be resumed within a period of time that is satisfactory to the State, the State may: (a) procure the affected Deliverable(s) from an alternate source without liability for payment so long as the delay in performance continues; or (b) terminate any portion of this Contract so affected and equitably adjust charges payable to the Contractor to reflect those Deliverable(s) that are terminated. The State must pay for all Deliverable(s) for which Final Acceptance has been granted before the termination date.

The Contractor will not have the right to any additional payments from the State as a result of any Excusable Failure or to payments for Deliverable(s) not provided as a result of the Excusable Failure. The Contractor will not be relieved of a default or delay caused by acts or omissions of its Subcontractors except to the extent that a Subcontractor experiences an Excusable Failure and the Contractor cannot reasonably circumvent the effect of the Subcontractor's default or delay in performance through the use of alternate sources, workaround plans, or other means, including disaster recovery plans.

2.8 Acceptance of Deliverable(s)

2.8.1 Quality Assurance

By tendering any Deliverable to the State, the Contractor certifies to the State that (a) it has performed reasonable quality assurance activities; (b) it has performed any reasonable testing; and (c) it has corrected all material deficiencies discovered during the quality assurance activities and testing. To the extent that testing occurs at State Locations, the State is entitled to observe and otherwise participate in the testing.

2.8.2 Delivery Responsibilities

Unless otherwise specified by the State in Section 1.4.5, Delivery Term, the following are applicable to all deliveries:

(a) The Contractor is responsible for delivering the Deliverable(s) by the applicable delivery date to the location(s) specified in the SOW or individual Purchase Order.

(b) The State will examine all packages at the time of delivery. The quantity of packages delivered must be recorded and any obvious visible or suspected damage must be noted at the time of delivery using the shipper's delivery document(s) and appropriate procedures to record the damage.

2.8.3 Process for Acceptance of Deliverable(s)

The State's review period for acceptance of the Deliverable(s) is governed by the applicable Statement of Work, and if the Statement of Work does not specify the State's review period, it is by default 30 Days for a Deliverable (State Review Period). The State will notify the Contractor by the end of the State Review Period that either:

(a) the Deliverable is accepted in the form delivered by the Contractor;

(b) the Deliverable is accepted, but noted deficiencies must be corrected; or

(c) the Deliverable is rejected along with notation of any deficiencies that must be corrected before acceptance of the Deliverable.

If the State delivers to the Contractor a notice of deficiencies, the Contractor will correct the described deficiencies and within 30 Days resubmit the Deliverable(s) with an explanation that demonstrates all corrections have been made to the original Deliverable(s). The Contractor's correction efforts will be made at no additional charge. Upon receipt of a corrected Deliverable from the Contractor, the State will have a reasonable additional period of time, not to exceed 30 Days, to accept the corrected Deliverable.

2.8.4 Acceptance of Deliverable(s)

(a) The State's obligation to comply with any State Review Period is conditioned on the timely delivery of the Deliverable(s). The State Review Period will begin on the first Business Day following the State's receipt of the Deliverable(s).

(b) The State may inspect the Deliverable to confirm that all components have been delivered without material deficiencies. If the State determines that the Deliverable or one of its components has material deficiencies, the State may reject the Deliverable without performing any further inspection or testing.

(c) The State will only approve a Deliverable after confirming that it conforms to and performs according to its specifications without material deficiency. The State may, in its discretion, conditionally approve a Deliverable that contains material deficiencies if the State elects to permit the Contractor to correct those deficiencies post-approval. The Contractor remains responsible for working diligently to correct, within a reasonable time at the Contractor's expense, all deficiencies in the Deliverable that remain outstanding at the time of State approval.

(d) If, after three opportunities the Contractor is unable to correct all deficiencies, the State may: (i) demand that the Contractor cure the failure and give the Contractor additional time to do so at the sole expense of the Contractor; (ii) keep this Contract in force and perform, either itself or through other parties, whatever the Contractor has failed to do, and recover the difference between the cost to cure the deficiency and this Contract price plus an additional amount equal to 10% of the State's cost to cure the deficiency; or (iii) fully or partially terminate this Contract for default by giving notice to the Contractor. Notwithstanding the foregoing, the State cannot use, as a basis for exercising its termination rights under this Section, deficiencies discovered in a repeat State Review Period that could reasonably have been discovered during a prior State Review Period.

(e) The State, at any time and in its reasonable discretion, may reject the Deliverable without notation of all deficiencies if the acceptance process reveals deficiencies in a sufficient quantity or of a sufficient severity that renders continuing the process unproductive or unworkable.

2.8.5 Process for Approval of Written Deliverable(s) –Deleted - Not Applicable

2.8.6 Process for Approval of Services –Deleted - Not Applicable

2.8.7 Final Acceptance

Unless otherwise stated in the Statement of Work, "Final Acceptance" of a Deliverable occurs when that Deliverable has been accepted by the State following the applicable State Review Period.

2.9 Ownership –Deleted - Not Applicable

2.10 State Standards –Deleted - Not Applicable

2.11 Confidentiality

2.11.1 Confidential Information

As used in this Section, "Confidential Information" means all information of the parties, except information that is:

(a) disclosable under the Michigan Freedom Of Information Act (FOIA);
(b) now available or becomes available to the public without breach of this Contract;
(c) released in writing by the disclosing party;
(d) obtained from a third party or parties having no obligation of confidentiality with respect to such information;
(e) publicly disclosed pursuant to federal or state law; or
(f) independently developed by the receiving party without reference to Confidential Information of the furnishing party.

2.11.2 Protection and Destruction of Confidential Information

(a) Each party must use the same care to prevent unauthorized disclosure of Confidential Information as it uses to prevent disclosure of its own information of a similar nature, but in no event less than a reasonable degree of care. Neither the Contractor nor the State will: (i) make any use of the Confidential Information of the other except as contemplated by this Contract; (ii) acquire any interest or license in or assert any lien against the Confidential Information of the other; or (iii) if requested to do so, refuse for any reason to promptly return the other party's Confidential Information.

(b) Each party will limit disclosure of the other party's Confidential Information to employees, agents, and Subcontractors who must have access to fulfill the purposes of this Contract. Disclosure to, and use by, a Subcontractor is permissible where: (i) use of a Subcontractor is authorized under this Contract; (ii) the disclosure is necessary or otherwise naturally occurs in connection with work that is within the Subcontractor's scope of responsibility; and (iii) Contractor obligates the Subcontractor in a written contract to maintain the State's Confidential Information in confidence. At the State's request, any employee of Contractor and of any Subcontractor having access to the State's Confidential Information may be required to execute a separate agreement to be bound by the confidentiality requirements of this Section.

(c) Upon termination of this Contract, Contractor must promptly return the State's Confidential Information or certify to the State that Contractor has destroyed all of the State's Confidential Information.

2.11.3 Exclusions

The provisions of Section 2.11, Confidentiality, will not apply where the receiving party is required by law to disclose the other party's Confidential Information, provided that the receiving party: (i) promptly provides the furnishing party with notice of the legal request; and (ii) assists the furnishing party in resisting or limiting the scope of the disclosure as reasonably requested by the furnishing party.

2.11.4 No Obligation to Disclose

Nothing contained in Section 2.11, Confidentiality, will be construed as obligating a party to disclose any particular Confidential Information to the other party.

2.11.5 Security Breach Notification

If Contractor breaches this Section, it must (i) promptly cure any deficiencies in Contractor's internal security controls; and (ii) comply with any applicable federal and state laws and regulations pertaining to unauthorized disclosures. Contractor and the State will cooperate to mitigate, to the extent practicable, the effects of any breach, intrusion, or unauthorized access, use, or disclosure. Contractor must notify the State of any unauthorized use or disclosure of Confidential Information, whether suspected or actual, within 10 days of becoming aware of the use or disclosure or a shorter time period as is reasonable under the circumstances. The State may require Contractor to purchase credit monitoring services for any individuals affected by the breach.

2.12 Records and Inspections

2.12.1 Inspection of Work Performed

The State's authorized representatives, at reasonable times and with 10 days prior notice, have the right to enter the Contractor's premises or any other places where work is being performed in relation to this Contract. The representatives may inspect, monitor, or evaluate the work being performed, to the extent the access will not reasonably interfere with or jeopardize the safety or operation of Contractor's systems or facilities. The Contractor must provide reasonable assistance for the State's representatives during inspections.

2.12.2 Retention of Records

(a) The Contractor must retain all financial and accounting records related to this Contract for a period of seven years after the Contractor performs any work under this Contract (Audit Period).

(b) If an audit, litigation, or other action involving the Contractor's records is initiated before the end of the Audit Period, the Contractor must retain the records until all issues arising out of the audit, litigation, or other action are resolved or until the end of the Audit Period, whichever is later.

2.12.3 Examination of Records

The State, upon 10 days notice to the Contractor, may examine and copy any of the Contractor's records that relate to this Contract. The State does not have the right to review any information deemed confidential by the Contractor if access would require the information to become publicly available. This requirement also applies to the records of any parent, affiliate, or subsidiary organization of the Contractor, or any Subcontractor that performs services in connection with this Contract.

2.12.4 Audit Resolution

If necessary, the Contractor and the State will meet to review any audit report promptly after its issuance. The Contractor must respond to each report in writing within 30 days after receiving the report, unless the report specifies a shorter response time. The Contractor and the State must develop, agree upon, and monitor an action plan to promptly address and resolve any deficiencies, concerns, or recommendations in the report.

2.12.5 Errors

(a) If an audit reveals any financial errors in the records provided to the State, the amount in error must be reflected as a credit or debit on the next invoice and subsequent invoices until the amount is paid or refunded in full. However, a credit or debit may not be carried forward for more than four invoices or beyond the termination of this Contract. If a balance remains after four invoices, the remaining amount will be due as a payment or refund within 45 days of the last invoice on which the balance appeared or upon termination of this Contract, whichever is earlier.

(b) In addition to other available remedies, if the difference between the State's actual payment and the correct invoice amount, as determined by an audit, is greater than 10%, the Contractor must pay all reasonable audit costs.

2.13 Warranties

2.13.1 Warranties and Representations

The Contractor represents and warrants:

(a) It is capable of fulfilling and will fulfill all of its obligations under this Contract. The performance of all obligations under this Contract must be provided in a timely, professional, and workmanlike manner and must meet the performance and operational standards required under this Contract.

(b) The Contract signatory has the authority to enter into this Contract on behalf of the Contractor.

(c) It is qualified and registered to transact business in all locations where required.

(d) Neither the Contractor nor any affiliates, nor any employee of either, has, will have, or will acquire, any interest that would conflict in any manner with the Contractor's performance of its duties and responsibilities to the State or otherwise create an appearance of impropriety with respect to the award or performance of this Contract. The Contractor must notify the State about the nature of any conflict or appearance of impropriety within two days of learning about it.

(e) Neither the Contractor nor any affiliates, nor any employee of either, has accepted or will accept anything of value based on an understanding that the actions of the Contractor, its affiliates, or its employees on behalf of the State would be influenced. The Contractor must not attempt to influence any State employee by the direct or indirect offer of anything of value.

(f) Neither the Contractor nor any affiliates, nor any employee of either, has paid or agreed to pay any person, other than bona fide employees and consultants working solely for the Contractor or the affiliate, any fee, commission, percentage, brokerage fee, gift, or any other consideration, contingent upon or resulting from the award or making of this Contract.

(g) The Contractor arrived at its proposed prices independently, without communication or agreement with any other bidder for the purpose of restricting competition. The Contractor did not knowingly disclose its quoted prices for this Contract to any other bidder before the award of this Contract. The Contractor made no attempt to induce any other person or entity to submit or not submit a proposal for the purpose of restricting competition.

(h) All financial statements, reports, and other information furnished by the Contractor to the State in connection with the award of this Contract fairly and accurately represent the Contractor's business, properties, financial condition, and results of operations as of the respective dates covered by the financial statements, reports, or other information. There has been no material adverse change in the Contractor's business, properties, financial condition, or results of operation.

(i) All written information furnished to the State by or for the Contractor in connection with the award of this Contract is true, accurate, and complete, and contains no false statement of material fact nor omits any material fact that would make the submitted information misleading.

(j) It will immediately notify DTMB-Procurement if any of the certifications, representations, or disclosures made in the Contractor's original bid response change after this Contract is awarded.

2.13.2 Warranty of Merchantability

The Deliverable(s) provided by the Contractor must be merchantable.

2.13.3 Warranty of Fitness for a Particular Purpose

The Deliverable(s) provided by the Contractor must be fit for the purpose(s) identified in this Contract.

2.13.4 Warranty of Title – Deleted – Not Applicable

2.13.5 Equipment Warranty – Deleted – Not Applicable

2.13.6 New Deliverable(s)

The Contractor must provide new Deliverable(s) where the Contractor knows or has the ability to select between new or like-new Unless specified in Article 1, Statement of Work, equipment that is assembled from new or serviceable used parts that are like new in performance is acceptable only where the Contractor does not have knowledge or the ability to select one or the other.

2.13.7 Prohibited Products

Shipping of salvage, distressed, outdated, or discontinued goods to any State agency will be considered a material default by the Contractor. The brand and product number offered for all items will remain consistent for the term of this Contract, unless DTMB-Procurement has approved a change order under Section 2.3.4, Contract Changes.

2.13.8 Consequences For Breach

In addition to any remedies available in law, if the Contractor breaches any of the warranties contained in Section 2.13, Warranties, the breach may be considered a material default.

2.14 Insurance

2.14.1 Liability Insurance

For the purpose of this Section, "State" includes its departments, divisions, agencies, offices, commissions, officers, employees, and agents.

(a) The following apply to all insurance requirements:

(i) The State, in its sole discretion, may approve the use of a fully-funded self-insurance program in place of any specified insurance identified in this Section.

(ii) Where specific coverage limits are listed in this Section, they represent the minimum acceptable limits. If the Contractor's policy contains higher limits, the State is entitled to coverage to the extent of the higher limits. The minimum limits of coverage specified are not intended, and may not be construed to limit any liability or indemnity of the Contractor to any indemnified party or other persons.
(iii) If the Contractor fails to pay any premium for a required insurance policy, or if any insurer cancels or significantly reduces any required insurance without the State's approval, the State may, after giving the Contractor at least 30 days notice, pay the premium or procure similar insurance coverage from another company or companies. The State may deduct any part of the cost from any payment due the Contractor, or require the Contractor to pay that cost upon demand.
(iv) In the event the State approves the representation of the State by the insurer's attorney, the attorney may be required to be designated as a Special Assistant Attorney General by the Michigan Attorney General.

(b) The Contractor must:
(i) provide proof that it has obtained the minimum levels of insurance coverage indicated or required by law, whichever is greater. The insurance must protect the State from claims that are alleged or may arise or result from the Contractor's or a Subcontractor's performance, including any person directly or indirectly employed by the Contractor or a Subcontractor, or any person for whose acts the Contractor or a Subcontractor may be liable.
(ii) waive all rights against the State for the recovery of damages that are covered by the insurance policies the Contractor is required to maintain under this Section. The Contractor's failure to obtain and maintain the required insurance will not limit this waiver.
(iii) ensure that all insurance coverage provided relative to this Contract is primary and non-contributing to any comparable liability insurance (including self-insurance) carried by the State.
(iv) obtain insurance, unless the State approves otherwise, from any insurer that has an A.M. Best rating of "A" or better and a financial size of VII or better, or if those ratings are not available, a comparable rating from an insurance rating agency approved by the State. All policies of insurance must be issued by companies that have been approved to do business in the State.
(v) maintain all required insurance coverage throughout the term of this Contract and any extensions. However, in the case of claims-made Commercial General Liability policies, the Contractor must secure tail coverage for at least three years following the termination of this Contract.
(vi) pay all deductibles.
(vii) pay for and provide the type and amount of insurance checked ☑ below:

☑ **(A) Commercial General Liability Insurance**

Minimal Limits:

$2,000,000 General Aggregate Limit other than Products/Completed Operations;
$2,000,000 Products/Completed Operations Aggregate Limit;
$1,000,000 Personal & Advertising Injury Limit; and
$1,000,000 Each Occurrence Limit.

Deductable maximum:

$50,000 Each Occurrence

Additional Requirements:

The Contractor must list the State of Michigan, its departments, divisions, agencies, offices, commissions, officers, employees, and agents as additional insureds on the Commercial General Liability certificate. The Contractor also agrees to provide evidence that insurance policies contain a waiver of subrogation by the insurance company.

☐ **(B) Umbrella or Excess Liability Insurance**

Minimal Limits:

$10,000,000 General Aggregate

Additional Requirements:

Umbrella or Excess Liability limits must at least apply to the insurance required in (A), General Commercial Liability. The Contractor must list the State of Michigan, its departments, divisions, agencies, offices, commissions, officers, employees, and agents as additional insureds on the certificate. The Contractor also agrees to provide evidence that insurance policies contain a waiver of subrogation by the insurance company.

☑ **(C) Motor Vehicle Insurance**

Minimal Limits:

If a motor vehicle is used in relation to the Contractor's performance, the Contractor must have vehicle liability insurance on the motor vehicle for bodily injury and property damage as required by law.

☐ **(D) Hired and Non-Owned Motor Vehicle Coverage**

Minimal Limits:

$1,000,000 Per Accident

Additional Requirements:

The Contractor must list the State of Michigan, its departments, divisions, agencies, offices, commissions, officers, employees, and agents as additional insureds on the vehicle liability certificate. The Contractor must also provide evidence that insurance policies contain a waiver of subrogation by the insurance company.

☑ **(E) Workers' Compensation Insurance**

Minimal Limits:

The Contractor must provide Workers' Compensation coverage according to applicable laws governing work activities in the state of the Contractor's domicile. If the applicable coverage is provided by a self-insurer, the Contractor must provide proof of an approved self-insured authority by the jurisdiction of domicile.

For employees working outside of the state of the Contractor's domicile, the Contractor must provide certificates of insurance proving mandated coverage levels for the jurisdictions where the employees' activities occur.

Additional Requirements:

The Contractor must provide the applicable certificates of insurance and a list of states where the coverage is applicable. Contractor must provide proof that the Workers' Compensation insurance policies contain a waiver of subrogation by the insurance company, except where such a provision is prohibited or limited by the laws of the jurisdiction in which the work is to be performed.

☑ **(F) Employers Liability Insurance**

Minimal Limits:

$100,000 Each Accident;
$100,000 Each Employee by Disease
$500,000 Aggregate Disease

Additional Requirements:

The Contractor must list the State of Michigan, its departments, divisions, agencies, offices, commissions, officers, employees, and agents as additional insureds on the certificate.

2.14.2 Subcontractor Insurance Coverage

Except where the State has approved a subcontract with other insurance provisions, the Contractor must require any Subcontractor to purchase and maintain the insurance coverage required in Section 2.14.1, Liability Insurance. Alternatively, the Contractor may include a Subcontractor under the Contractor's insurance on the coverage required in that Section. The failure of a Subcontractor to comply with insurance requirements does not limit the Contractor's liability or responsibility.

2.14.3 Certificates of Insurance and Other Requirements

Before this Contract is signed, and not less than 20 days before the insurance expiration date every year thereafter, the Contractor must provide evidence that the State and its agents, officers, and employees are listed as additional insureds under each commercial general liability and commercial automobile liability policy. The Contractor must provide DTMB-Procurement with all applicable certificates of insurance verifying insurance coverage or providing satisfactory evidence of self-insurance as required in Section 2.14.1, Liability Insurance. Each certificate must be on the standard "accord" form or equivalent and MUST CONTAIN THE APPLICABLE CONTRACT OR PURCHASE ORDER NUMBER. Each certificate must be prepared and submitted by the insurer and must contain a provision indicating that the coverage afforded will not be cancelled, materially changed, or not renewed without 30 days prior notice, except for 10 days for nonpayment of premium, to the Director of DTMB-Procurement. The notice to the Director of DTMB-Procurement must include the applicable Contract or Purchase Order number.

2.15 Indemnification

2.15.1 General Indemnification

To the extent permitted by law, the Contractor must indemnify, defend, and hold the State harmless from liability, including all claims and losses, and all related costs and expenses (including reasonable attorneys' fees and costs of investigation, litigation, settlement, judgments, interest and penalties), accruing or resulting to any person, firm, or corporation that may be injured or damaged by the Contractor in the performance of this Contract and that are attributable to the negligence or tortious acts of the Contractor, any of its subcontractors, or by anyone else for whose acts any of them may be liable.

2.15.2 Code Indemnification – Deleted - Not Applicable

2.15.3 Employee Indemnification

In any claims against the State, its departments, agencies, commissions, officers, employees, and agents, by any employee of the Contractor or any of its subcontractors, the indemnification obligation will not be limited in any way by the amount or type of damages, compensation, or benefits payable by or for the Contractor or any of its subcontractors under worker's disability compensation acts, disability benefit acts, or other employee benefit acts. This indemnification clause is intended to be comprehensive. Any overlap in provisions, or the fact that greater specificity is provided as to some categories of risk, is not intended to limit the scope of indemnification under any other provisions.

2.15.4 Patent/Copyright Infringement Indemnification

(a) To the extent permitted by law, the Contractor must indemnify and hold the State harmless from liability, including all claims and losses, and all related costs and expenses (including reasonable attorneys' fees and costs of investigation, litigation, settlement, judgments, interest, and penalties) resulting from any action threatened or brought against the State to the extent that the action is based on a claim that any piece of equipment, software, commodity, or service supplied by the Contractor or its subcontractors, or its operation, use, or reproduction, infringes any United States patent, copyright, trademark or trade secret of any person or entity.

(b) If, in the State's or the Contractor's opinion, any piece of equipment, software, commodity or service supplied by the Contractor or its subcontractors, or its operation, use, or reproduction, is likely to become the subject of an infringement claim, the Contractor must, at its expense: (i) procure for the State the right to continue using the equipment, software, commodity or service or, if this option is not reasonably available to the Contractor; (ii) replace or modify to the State's satisfaction the same with equipment, software, commodity or service of equivalent function and performance so that it becomes non-infringing, or, if this option is not reasonably available to Contractor; (iii) accept its return by the State with appropriate credits to the State against the Contractor's charges and reimburse the State for any losses or costs incurred as a consequence of the State ceasing its use and returning it.

(c) Notwithstanding the foregoing, the Contractor has no obligation to indemnify or defend the State for, or to pay any costs, damages or attorneys' fees related to, any infringement claim based upon: (i) equipment, software, commodity or service developed based on written specifications of the State; (ii) use of the equipment, software, or commodity in a configuration other than implemented or approved by the Contractor, including any modification of the same by the State; or (iii) the combination, operation, or use of the

equipment, software, or commodity with equipment, software, or commodities not supplied by the Contractor under this Contract.

2.15.5 Continuing Obligation

The Contractor's duty to indemnify under Section 2.15, Indemnification, continues in full force and effect, notwithstanding the expiration or early cancellation of this Contract, with respect to any claims based on facts or conditions that occurred before expiration or cancellation.

2.15.6 Indemnification Procedures

These procedures apply to all indemnity obligations:

(a) After the State receives notice of an action or proceeding involving a claim for which it will seek indemnification, the State must promptly notify the Contractor of the claim and take, or assist the Contractor in taking, any reasonable action to avoid a default judgment against the Contractor. Failure to notify the Contractor does not relieve the Contractor of its indemnification obligations except to the extent that the Contractor can prove damages attributable to the notification failure. Within 10 days following receipt of notice from the State relating to any claim, the Contractor must notify the State whether the Contractor agrees to assume control of the defense and settlement of that claim (a "Notice of Election"). After notifying the Contractor of a claim and before the State receives the Contractor's Notice of Election, the State is entitled to defend against the claim, at the Contractor's expense, and the Contractor will be responsible for any reasonable costs, including attorney fees, incurred by the State in defending against the claim during that period.

(b) If the Contractor delivers a Notice of Election relating to any claim: (i) the State is entitled to participate in the defense of the claim and to employ counsel at its own expense to assist in handling the claim and to monitor and advise the State about the status and progress of the defense; (ii) the Contractor must, at the request of the State, demonstrate the Contractor's financial ability to carry out its defense and indemnity obligations under this Contract; (iii) the Contractor must periodically advise the State about the status and progress of the defense and must obtain prior approval of the State before entering into any settlement of the claim or ceasing to defend against the claim; and (iv) to the extent that any principles of Michigan governmental or public law may be involved or challenged, the State has the right, at its own expense, to control the defense of that portion of the claim. The State may retain control of the defense and settlement of a claim by notifying the Contractor within 10 days after the State's receipt of the Contractor's information requested by the State under clause (ii) of this paragraph, if the State determines that the Contractor has failed to demonstrate to the reasonable satisfaction of the State the Contractor's financial ability to carry out its defense and indemnity obligations under this Section. Any litigation activity on behalf of the State, or any of its subdivisions under this Section, must be coordinated with the Department of Attorney General. In the event the insurer's attorney represents the State under this Section, the insurer's attorney may be required to be designated as a Special Assistant Attorney General by the Attorney General of the State of Michigan.

(c) If the Contractor does not deliver a Notice of Election relating to any claim of which it is notified, the State may defend the claim in a manner it deems appropriate, at the cost and expense of the Contractor. If it is determined that the claim was one against which the Contractor was required to indemnify the State, upon request of the State, the Contractor must promptly reimburse the State for all reasonable costs and expenses.

2.15.7 Limitation of Liability

Neither the Contractor nor the State is liable to each other, regardless of the form of action, for consequential, incidental, indirect, or special damages. This limitation of liability does not apply to claims for infringement of United States patent, copyright, trademark or trade secrets; to claims for personal injury or damage to property caused by the gross negligence or willful misconduct of the Contractor; to claims covered by other specific provisions of this Contract calling for liquidated damages; or to court costs or attorneys' fees awarded by a court in addition to damages after litigation based on this Contract.

2.16 Termination by the State

2.16.1 Notice and Right to Cure

If the Contractor breaches this Contract, and the State, in its sole discretion, determines that the breach is curable, the State will provide the Contractor notice of the breach and a period of at least 30 days to cure the breach. The State does not need to provide notice or an opportunity to cure for successive or repeated

breaches or if the State determines, in its sole discretion, that a breach poses a serious and imminent threat to the health or safety of any person or the imminent loss, damage, or destruction of any real or tangible personal property.

2.16.2 Termination for Cause

(a) The State may fully or partially terminate this Contract for cause by notifying the Contractor if the Contractor: (i) breaches any of its material duties or obligations (including a Chronic Failure to meet any SLA); or (ii) fails to cure a breach within the time period specified in a notice of breach provided by the State.

(b) The Contractor must pay all reasonable costs incurred by the State in terminating this Contract for cause, including administrative costs, attorneys' fees and court costs, and any additional costs the State incurs to procure the Deliverable(s) from other sources. Re-procurement costs are not consequential, indirect, or incidental damages, and cannot be excluded by any other terms otherwise included in this Contract, provided the costs are not in excess of 50% more than the prices for the Deliverable(s).

(c) If the State partially terminates this Contract for cause, any charges payable to the Contractor will be equitably adjusted to reflect those Deliverable(s) that are terminated. The State must pay for all Deliverable(s) for which Final Acceptance has been granted before the termination date. Any services or related provisions of this Contract that are terminated for cause must cease on the effective date of the termination.

(d) If the State terminates this Contract for cause and it is determined, for any reason, that the Contractor was not in breach of this Contract, the termination will be deemed to have been a termination under Section 2.16.3, Termination for Convenience, effective as of the same date, and the rights and obligations of the parties will be limited to those provided in that Section.

2.16.3 Termination for Convenience

The State may fully or partially terminate this Contract for its convenience if the State determines that a termination is in the State's best interest. Reasons for the termination are within the sole discretion of the State and may include: (a) the State no longer needs the Deliverable(s) specified in this Contract; (b) a relocation of office, program changes, or changes in laws, rules, or regulations make the Deliverable(s) no longer practical or feasible for the State; (c) unacceptable prices for Contract changes; or (d) falsification or misrepresentation, by inclusion or non-inclusion, of information material to a response to any ITB issued by the State. The State may terminate this Contract for its convenience by giving Contractor notice at least 30 days before the date of termination. If the State chooses to terminate this Contract in part, any charges payable to the Contractor must be equitably adjusted to reflect those Deliverable(s) that are terminated.

2.16.4 Termination for Non-Appropriation

(a) If this Contract extends for more than one fiscal year, continuation of this Contract is subject to the appropriation or availability of funds. If sufficient funds to enable the State to continue payment are not appropriated or otherwise made available, the State must fully or partially terminate this Contract at the end of the last period for which funds have been appropriated or otherwise made available The State must give the Contractor notice at least 30 days before the date of termination, unless the State receives notice of the non-appropriation or unavailability less than 30 days before the end of the last period for which funds have been appropriated or otherwise made available.

(b) If funding for this Contract is reduced by law, or funds to pay the Contractor for the Deliverable(s) are not appropriated or are otherwise unavailable, the State may, upon 30 days notice to the Contractor, change the Deliverable(s) in the manner and for the periods of time the State may elect. The charges payable under this Contract will be equitably adjusted to reflect any Deliverable(s) not provided because of the reduction.

(c) If the State fully or partially terminates this Contract for non-appropriation, the State must pay the Contractor for all work-in-progress performed through the effective date of the termination to the extent funds are available.

2.16.5 Termination for Criminal Conviction

The State may terminate this Contract immediately and without further liability or penalty if the Contractor, an officer of the Contractor, or an owner of a 25% or greater share of the Contractor is convicted of a criminal offense related to a State, public, or private Contract or subcontract.

2.16.6 Termination for Approvals Rescinded

The State may terminate this Contract if any final administrative or judicial decision or adjudication disapproves a previously approved request for purchase of personal services under Constitution 1963, Article 11, § 5, and Civil Service Rule 7-1. In that case, the State will pay the Contractor for all work-in-progress performed through the effective date of the termination. This Contract may be fully or partially terminated and will be effective as of the date stated in the notice.

2.16.7 Rights and Obligations upon Termination

(a) If the State terminates this Contract for any reason, the Contractor must:

(i) stop all work as specified in the notice of termination;

(ii) take any action that may be necessary, or that the State may direct, to preserve and protect Deliverable(s) or other State property in the Contractor's possession;

(iii) return all materials and property provided directly or indirectly to the Contractor by any entity, agent, or employee of the State;

(iv) transfer title in and deliver to the State, unless otherwise directed, all Deliverable(s) intended to be transferred to the State at the termination of this Contract (which will be provided to the State on an "As-Is" basis except to the extent the State compensated the Contractor for warranty services related to the materials);

(v) to the maximum practical extent, take any action to mitigate and limit potential damages, including terminating or limiting subcontracts and outstanding orders for materials and supplies; and

(vi) take all appropriate action to secure and maintain State information confidentially in accordance with Section 2.11, Confidentiality.

(b) If the State terminates this Contract under Section 2.16.3, Termination for Convenience, the State must pay the Contractor all charges due for Deliverable(s) provided before the date of termination and, if applicable, as a separate item of payment, for work-in-progress, based on a percentage of completion determined by the State. All completed or partially completed Deliverable(s) prepared by the Contractor, at the option of the State, become the State's property, and the Contractor is entitled to receive equitable compensation for those Deliverable(s). Regardless of the basis for the termination, the State is not obligated to pay or otherwise compensate the Contractor for any lost expected future profits, costs, or expenses incurred with respect to Deliverable(s) not actually completed.

(c) If the State terminates this Contract for any reason, the State may assume, at its option, any subcontracts and agreements for Deliverable(s), and may pursue completion of the Deliverable(s) by replacement contract or as the State deems expedient.

2.16.8 Reservation of Rights

In the event of any full or partial termination of this Contract, each party reserves all rights or remedies otherwise available to the party.

2.16.9 Contractor Transition Responsibilities

If this Contract terminates under Section 2.16, Termination by the State, the Contractor must make reasonable efforts to transition the performance of the work, including all applicable equipment, services, software, and leases, to the State or a third party designated by the State within a reasonable period of time that does not exceed 30 days from the date of termination. The Contractor must provide any required reports and documentation.

2.16.10 Transition Payments

If the transition responsibilities outlined in Section 2.16.9, Contractor Transition Responsibilities, arise based on a termination of this Contract, reimbursement will be governed by the provisions of Section 2.16, Termination by the State. If the transition results from expiration, the Contractor will be reimbursed for all reasonable transition costs (i.e., costs incurred after the expiration within the time period in Section 2.16.9 that result from transition operations) at these Contract rates. The Contractor must prepare an accurate accounting from which the State and the Contractor may reconcile all outstanding accounts.

2.17 Termination by the Contractor

2.17.1 Termination

If the State breaches this Contract and the Contractor, in its sole discretion, determines that the breach is curable, then the Contractor will provide the State with notice of the breach and a time period (not less than 30 days) to cure the breach.

The Contractor may terminate this Contract if the State: (a) materially breaches its obligation to pay the Contractor undisputed amounts due; (b) breaches its other obligations to an extent that makes it impossible or commercially impractical for the Contractor to complete the Deliverable(s); or (c) does not cure the breach within the time period specified in a notice of breach. The Contractor must discharge its obligations under Section 2.20, Dispute Resolution, before it terminates this Contract.

2.18 Stop Work – Deleted – Not Applicable

2.18.1 Stop Work Order – Deleted – Not Applicable

2.18.2 Termination of Stop Work Order – Deleted – Not Applicable

2.18.3 Allowance of the Contractor's Costs – Deleted – Not Applicable

2.19 Reserved

2.20 Dispute Resolution

2.20.1 General

(a) The Contractor must submit any claim related to this Contract to the State under Section 2.3.6, Notices, together with all supporting documentation for the claim.

(b) The representatives of the Contractor and the State must meet as often as the parties reasonably deem necessary to gather and furnish to each other all information related to the claim.

(c) During the course of negotiations, each party will honor all reasonable requests made by the other for non-privileged information reasonably related to the claim.

2.20.2 Informal Dispute Resolution

(a) If, after a reasonable time following submission of a claim under Section 2.20.1, General, the parties are unable to resolve the claim, the parties must meet with the Director of DTMB-Procurement, or his or her designee, for the purpose of attempting to resolve the dispute without the need for formal legal proceedings.

(b) Within 60 calendar days of the meeting with the Director of DTMB-Procurement, or such other time as agreed to by the parties, the Director of DTMB-Procurement will issue a written recommendation regarding settlement of the claim. The Contractor must notify DTMB-Procurement within 21 days after the recommendation is issued whether the Contractor accepts or rejects the recommendation. Acceptance by the Contractor constitutes the final resolution of the claim addressed in the recommendation, and the Contractor may not assert that claim in any future litigation or other proceeding between the parties.

(c) The recommendation of the Director of DTMB-Procurement is not admissible in any future litigation or other proceeding between the parties. The conduct and statements made during the course of negotiations or dispute resolution under Section 2.20, Dispute Resolution, are subject to Michigan Rule of Evidence 408 and are not admissible in any future litigation or other proceeding between the parties.

(d) This section will not be construed to prohibit either party from instituting formal proceedings to avoid the expiration of any applicable limitations period, to preserve a superior position with respect to other creditors, or under Section 2.20.3, Injunctive Relief.

(e) DTMB-Procurement will not mediate disputes between the Contractor and any other entity, except State agencies, concerning responsibility for performance of work.

2.20.3 Injunctive Relief

A claim between the State and the Contractor is not subject to the provisions of Section 2.20.2, Informal Dispute Resolution, where a party makes a good faith determination that a breach of this Contract by the other party will result in damages so immediate, so large or severe, and so incapable of adequate redress that a temporary restraining order or other injunctive relief is the only adequate remedy.

2.20.4 Continued Performance

Each party will continue performing its obligations under this Contract while a claim is being resolved, except to the extent the claim precludes performance and without limiting either party's right to terminate this Contract as provided in Section 2.16, Termination by the State or Section 2.17, Termination by the Contractor. A claim involving payment does not preclude performance.

2.21 Disclosure Responsibilities

2.21.1 Disclosure of Litigation

(a) Within 30 days after receiving notice of any litigation, investigation, arbitration, or other proceeding (collectively, "Proceeding") that arises during the term of this Contract, the Contractor must disclose the following to the Contract Administrator:

(i) A criminal Proceeding involving the Contractor (or any Subcontractor) or any of its officers or directors;

(ii) A parole or probation Proceeding;

(iii) A Proceeding involving the Contractor (or any Subcontractor) or any of its officers or directors under the Sarbanes-Oxley Act; and

(iv) A civil Proceeding to which the Contractor (or, if the Contractor is aware, any Subcontractor) is a party, and which involves (A) a claim that might reasonably be expected to adversely affect the viability or financial stability of the Contractor or any Subcontractor; or (B) a claim or written allegation of fraud against the Contractor (or, if the Contractor is aware, any Subcontractor) by a governmental or public entity arising out of the Contractor's business dealings with governmental or public entities.

(b) Information provided to the State from the Contractor's publicly filed documents will satisfy the requirements of this Section.

(c) If any Proceeding that is disclosed to the State or of which the State otherwise becomes aware, during the term of this Contract, would cause a reasonable party to be concerned about: (i) the ability of the Contractor (or a Subcontractor) to continue to perform this Contract; or (ii) whether the Contractor (or a Subcontractor) is engaged in conduct that is similar in nature to the conduct alleged in the Proceeding and would constitute a breach of this Contract or a violation of federal or state law, regulations, or public policy, then the Contractor must provide the State all requested reasonable assurances that the Contractor and its Subcontractors will be able to continue to perform this Contract.

2.21.2 Other Disclosures

The Contractor must notify DTMB-Procurement within 30 days of:

(a) becoming aware that a change in the Contractor's ownership or officers has occurred or is certain to occur; or

(b) any changes to company affiliations.

2.21.3 Call Center Disclosure – Deleted – Not Applicable

2.22 Extended Purchasing

2.22.1 MiDEAL Requirements – Deleted – Not Applicable

2.22.2 State Administrative Fee – Deleted – Not Applicable

2.22.3 State Employee Purchase Requirements- Deleted - Not Applicable

2.23 Laws

2.23.1 Governing Law

This Contract is governed by, and construed according to, the substantive laws of the State of Michigan without regard to any Michigan choice of law rules that would apply the substantive law of another jurisdiction to the extent not inconsistent with or preempted by federal law.

2.23.2 Compliance with Laws

The Contractor must comply with all applicable federal, state, and local laws and ordinances in providing the Deliverable(s).

2.23.3 Jurisdiction

Any dispute arising from this Contract must be resolved in the State of Michigan. With respect to any claim between the parties, the Contractor consents to venue in Ingham County, Michigan, and irrevocably waives any objections to this venue that it may have, such as lack of personal jurisdiction or *forum non conveniens*. The Contractor must appoint agents in the State of Michigan to receive service of process.

2.23.4 Nondiscrimination

In the performance of this Contract, the Contractor agrees not to discriminate against any employee or applicant for employment, with respect to his or her hire, tenure, terms, conditions or privileges of employment, or any matter directly or indirectly related to employment, because of race, color, religion, national origin, ancestry, age, sex, height, weight, marital status, or physical or mental disability. The Contractor further agrees that every subcontract entered into for the performance of this Contract will contain a provision requiring non-discrimination in employment, as specified here, binding upon each Subcontractor. This covenant is required under the Elliott-Larsen Civil Rights Act, 1976 PA 453, MCL 37.2101, *et seq*., and the Persons with Disabilities Civil Rights Act, 1976 PA 220, MCL 37.1101, *et seq*., and any breach of this provision may be regarded as a material breach of this Contract.

2.23.5 Unfair Labor Practices

Under 1980 PA 278, MCL 423.321, *et seq*., the State must not award a Contract or subcontract to an employer whose name appears in the current register of employers failing to correct an unfair labor practice compiled under MCL 423.322. This information is compiled by the United States National Labor Relations Board. A Contractor of the State, in relation to this Contract, must not enter into a contract with a Subcontractor, manufacturer, or supplier whose name appears in this register. Under MCL 423.324, the State may void any Contract if, after award of this Contract, the name of the Contractor as an employer or the name of the Subcontractor, manufacturer or supplier of the Contractor appears in the register.

2.23.6 Environmental Provision

For the purposes of this section, "Hazardous Materials" include asbestos, ACBMs, PCBs, petroleum products, construction materials including paint thinners, solvents, gasoline, oil, and any other material the manufacture, use, treatment, storage, transportation or disposal of which is regulated by the federal, state, or local laws governing the protection of the public health, natural resources, or the environment:

(a) The Contractor must use, handle, store, dispose of, process, transport, and transfer any Hazardous Material according to all federal, State, and local laws. The State must immediately advise the Contractor of the presence of any known Hazardous Material at the work site. If the Contractor encounters material reasonably believed to be Hazardous Material that may present a substantial danger, the Contractor must: (i) immediately stop all affected work; (ii) notify the State in accordance with Section 2.3.6, Notices; (iii) notify any entities required by law; and (iv) take appropriate health and safety precautions.

(b) The State may issue a Stop Work Order if the material is a Hazardous Material that may present a substantial danger and the Hazardous Material was not brought to the site by the Contractor, or does not wholly or partially result from any violation by the Contractor of any laws covering the use, handling, storage, disposal of, processing, transport and transfer of Hazardous Materials. The State may remove the Hazardous Material, render it harmless, or terminate the affected work for the State's convenience.

(c) If the Hazardous Material was brought to the site by the Contractor, or wholly or partially results from any violation by the Contractor of any laws covering the use, handling, storage, disposal of, processing, transport and transfer of Hazardous Material, or from any other act or omission within the control of the Contractor, the Contractor must bear its proportionate share of the delay and costs involved in cleaning up the site and removing and rendering harmless the Hazardous Material according to applicable laws.

2.23.7 Freedom of Information

This Contract and all information submitted to the State by the Contractor is subject to the Michigan Freedom of Information Act (FOIA), 1976 PA 442, MCL 15.231, *et seq*.

2.23.8 Workplace Safety and Discriminatory Harassment – Deleted - Not Applicable

2.23.9 Prevailing Wage – Deleted - Not Applicable

2.23.10 Abusive Labor Practices

The Contractor may not furnish any Deliverable(s) that were produced fully or partially by forced labor, convict labor, forced or indentured child labor, or indentured servitude.

"Forced or indentured child labor" means all work or service (1) exacted from any person under the age of 18 under the menace of any penalty for its nonperformance and for which the worker does not offer himself voluntarily; or (2) performed by any person under the age of 18 under a contract the enforcement of which can be accomplished by process or penalties.

2.24 General Provisions

2.24.1 Bankruptcy and Insolvency

The State may, without prejudice to any other right or remedy, fully or partially terminate this Contract and, at its option, take possession of the work-in-progress and finish the work-in-progress by whatever method the State deems appropriate if:

(a) the Contractor files for bankruptcy protection;
(b) an involuntary petition is filed against the Contractor and not dismissed within 30 days;
(c) the Contractor becomes insolvent or a receiver is appointed due to the Contractor's insolvency;
(d) the Contractor makes a general assignment for the benefit of creditors; or
(e) the Contractor or its affiliates are unable to provide reasonable assurances that the Contractor or its affiliates can provide the Deliverable(s) under this Contract.

Contractor will place appropriate notices or labels on the work-in-progress to indicate ownership by the State. To the extent reasonably possible, work-in-progress must be stored separately from other stock and marked conspicuously with labels indicating State ownership.

2.24.2 Media Releases

News releases (including promotional literature and commercial advertisements) pertaining to the ITB and this Contract or the project to which it relates will not be made without prior approval by the State, and only in accordance with the instructions from the State.

2.24.3 Contract Distribution

DTMB-Procurement retains the sole right of Contract distribution to all State agencies and local units of government unless other arrangements are authorized by DTMB-Procurement.

2.24.4 Permits

Contractor must obtain and pay any associated costs for all required governmental permits, licenses, and approvals for the delivery, installation, and performance of this Contract.

2.24.5 Website Incorporation

The State is not bound by any content on the Contractor's website unless incorporated directly into this Contract.

2.24.6 Future Bidding Preclusion – Deleted - Not Applicable

2.24.7 Antitrust Assignment

The Contractor assigns to the State any claim for overcharges resulting from state or federal antitrust violations to the extent that those violations concern materials or services supplied by third parties toward fulfillment of this Contract.

2.24.8 Disaster Recovery

Contractor and the State recognize that the State provides essential services in times of natural or man-made disasters. Therefore, except as mandated by federal disaster response requirements, Contractor personnel dedicated to providing Deliverable(s) under this Contract will provide the State with priority.

2.24.9 Legal Effect

The State is not liable for costs incurred by the Contractor or for payment(s) under this Contract until the Contractor is authorized to perform under Section 1.2.4, Ordering.

2.24.10 Entire Agreement

This Contract constitutes the entire agreement between the parties and supersedes all prior agreements, whether written or oral, with respect to the subject matter. All attachments referenced in this Contract are incorporated in their entirety and form part of this Contract.

2.24.11 Order of Precedence

Any inconsistency in the terms associated with this Contract will be resolved by giving precedence to the terms in the following descending order:

(a) Mandatory sections (2.1.1, Contract Term, 2.24.9, Legal Effect, 2.2.2, Payment Deadlines, 2.14, Insurance, 2.15, Indemnification, 2.16, Termination, 2.23, Governing Law, 2.15.7, Limitation of Liability);
(b) The most recent Statement of Work related to this Contract;
(c) All sections from Article 2 - Terms and Conditions, not listed in subsection (a);
(d) Any attachment or exhibit to the Contract documents;
(e) Any Purchase Order, Direct Voucher, or Procurement Card Order issued under this Contract; and
(f) Bidder Responses contained in any of the ITB documents.

2.24.12 Headings

The captions and section headings used in this Contract are for convenience only and may not be used to interpret the scope and intent of this Contract.

2.24.13 Form, Function and Utility– Deleted - Not Applicable

2.24.14 Reformation and Severability

Each provision of this Contract is severable from all other provisions of this Contract. If any provision of this Contract is held unenforceable, then this Contract will be modified to reflect the parties' original intent. All remaining provisions of this Contract remain in full force and effect.

2.24.15 Approval

Unless otherwise provided in this Contract, approval(s) must be in writing and must not be unreasonably withheld or delayed.

2.24.16 No Waiver of Default

Failure by a party to insist upon strict adherence to any term of this Contract does not waive that party's right to later insist upon strict adherence to that term, or any other term, of this Contract.

2.24.17 Survival

The provisions of this Contract that impose continuing obligations, including warranties, indemnification, and confidentiality, will survive the expiration or termination of this Contract.

Attachment A, Pricing

Item	Commodity ID	Description	U/M	Estimated Annual Usage	Price Per Unit
1	801-09-31-0757	**Sign Section:** Extruded Aluminum with holes punched; column supported; butt-type edge; extruded aluminum of alloy 6063 -T6, conforming to ASTM B 221; in compliance with 2012 MDOT Standard Specifications for Construction 919.02 and Table 919-1 and 919-2, (as attached); **Size: 12"x30' with holes punched**	EA	200	$229.50
2	801-09-31-0757	**Sign Section:** Extruded Aluminum with holes punched; column supported; butt-type edge; extruded aluminum of alloy 6063 -T6, conforming to ASTM B 221; in compliance with 2012 MDOT Standard Specifications for Construction 919.02 and Table 919-1 and 919-2, (as attached); **Size: 6"x30' with holes punched**	EA	40	$196.75

Quick Payment Terms:

A quick payment discount of 1% off an invoice if paid within 15 Days from the State's receipt of the invoice or delivery of the Deliverable(s), whichever is later.

Attachment B, MDOT Standard Specifications for Construction

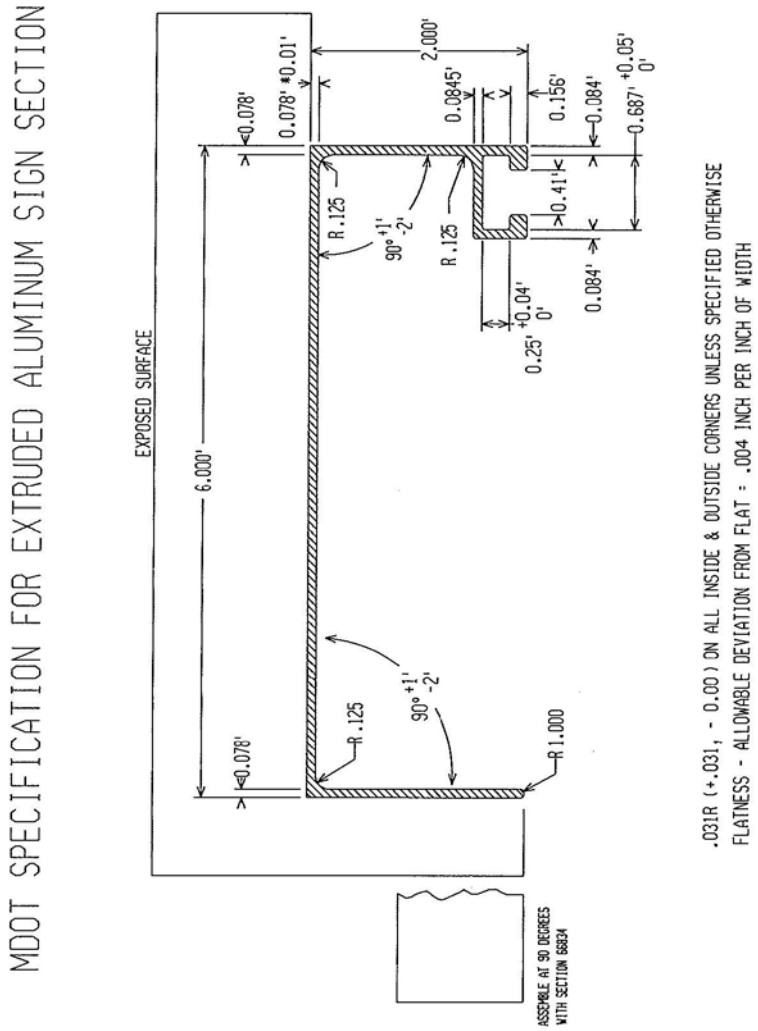

MDOT SPECIFICATION FOR EXTRUDED ALUMINUM SIGN SECTION

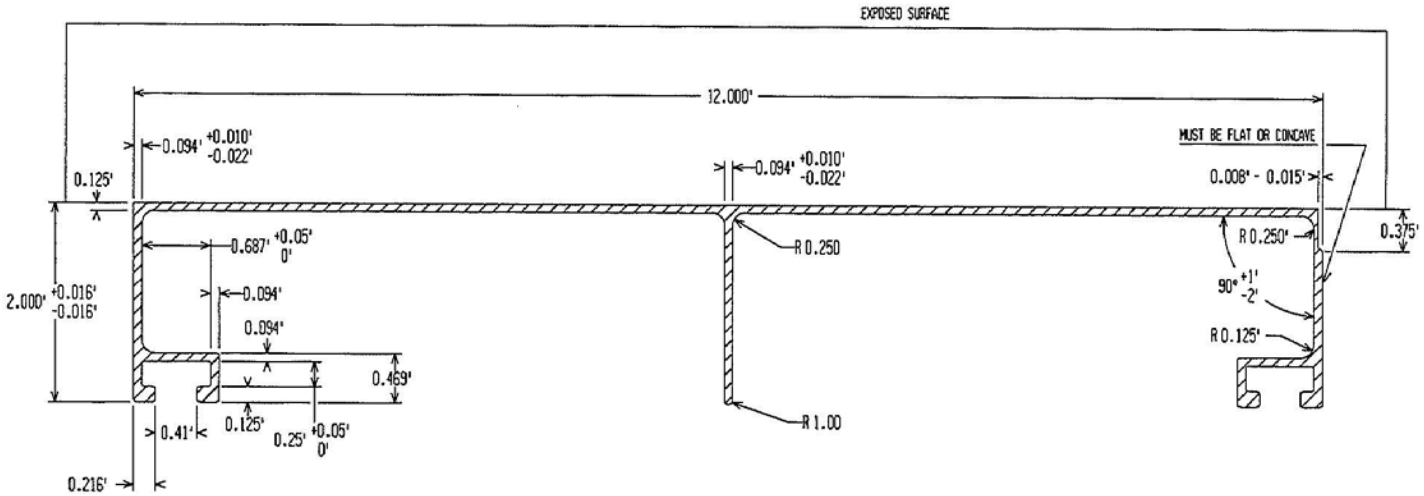

FLATNESS: ALLOWABLE DEVIATION FROM FLAT = 0.004 INCH PER INCH OF WIDTH

.031R (+.031, -.0.00) INSIDE AND OUTSIDE CORNERS UNLESS SPECIFIED OTHERWISE

:T #071B2200197

Section 919. PERMANENT TRAFFIC SIGN AND SUPPORT MATERIALS

919.01. General Requirements. Permanent traffic signs and sign support material must meet the requirements of the MDOT Sign Support Standard Plans and this section.

Cantilever, truss, breakaway column, and aluminum structure inspection must be in accordance with section 707 and this section.

919.02. Traffic Signs. The Department classifies signs by type of sign panel material and type of sign face, as follows:

Table 919-1 Sign Panel and Face Types		
Sign Panel		
Type	**Material**	**Size Limits**
I	Aluminum Extruded Sections	Height > 48 in or Width > 144 in
II	Plywood	Height = 48 in and Width = 24 in From Height ≥ 36 in and Width ≥ 36 in up to Height ≤ 48 in or Width ≤ 144 in
III	0.080 in Aluminum Sheet (a)	36 in by 36 in
IV	0.040 Aluminum Sheet (a)	Overlay
Sign Face		
Type	**Background**	**Legend**
A	Reflectorized	Reflectorized
B	Reflectorized	Non-reflectorized
C	Non-reflectorized	Reflectorized
a. Corners must be rounded on aluminum sheet signs		

A. **Sign Panel Material and Fabrication.**

1. **Aluminum Extruded Sections.** Provide aluminum extruded sections in a variety of widths with plain butt-type edges for connecting to adjoining horizontal sections. Sections must be one-piece with no vertical splices and have a cross-sectional shape meeting the minimum requirements specified in Table 919-2. Sections must have at least a 0.125-inch nominal thickness. Exterior corners must have a radius of at least 0.040 inch.

   Sign panel sections must be extruded aluminum alloy 6063-T6, meeting the requirements of ASTM B 221. Panel sections, after fabrication, must be flat to within 0.031 inch or less per foot of length and to within 0.004 inch or less per inch of width.

   Degrease aluminum extruded sign panel sections in accordance with the sheeting manufacturer's recommendations. After degreasing, surface treating, and rinsing, maintain sign panels free of grease, oil, or other contaminants.

Table 919-2
Cross-Sectional Requirements for Extruded Aluminum Sign Sections for Type I Sign Panels

Length of Sign Support Type	Moment of Inertia	Section Modulus	Elements of Cross Section			
			No Free Ends		One Free End	
			b/t	≥I/y	b/t	≥I/y
≤30 ft on Columns ≤20 ft on Cantilevers ≤30 ft on Trusses	≥0.94 W	≥0.55 W	8–50	56.0C	5–28	32.0A
			>50	3.4D	>28	11.6B

Note: b = the compression width of stiffener elements in inches.
t = the thickness of the stiffener element in inches.
I = moment of inertia of the sign section in inches^4.
y = the distance from the neutral axis to the centroid of the compression width of the element.
W = the width of the sign section in feet.
A = W/(63-b/t).
B = 1.0×10^{-4} W(b/t)^2.
C = W/(111-b/t).
D = 1.0×10^{-4} W(b/t)^2.

Connect the sections horizontally with ⅜ inch diameter stainless steel bolts, spaced as shown on the Sign Support Standard Plans. Section connections or sign-to-post connections must have no fasteners that project through the sign panel face.

If using a 6 inch plank, position the plank second from the bottom of the sign.

Before transporting sign panels, ensure the support angles and wide flanged shapes are shop connected and remain on the sign.

2. **Plywood.** Plywood sign panels must be ⅝ inch thick and have a black or natural color overlay on both sides. Panels must meet the requirements of the U.S. Product Standard PS-1-83 for Group 1 wood species, Grade B-B veneer, exterior type, high-density overlaid plywood. Inner plies must meet the requirements of Section 3.8.1, "Crossband Gaps and Center Gaps" of the U.S. Product Standard PS-1-83. Inner plies must have no continuous core gaps, tunnels, holes, or through openings that travel longitudinally or transversely through the plies, as measured from the panel edge. Crossband gaps or center gaps allowed by the U.S. Product Standard PS-1-83 must be filled with a synthetic filler repair, in accordance with Section 3.3, "Synthetic Repairs" of the U.S. Product Standard PS-1-83. Smooth and seal edges with one coat of exterior oil base paint.

   Do not make vertical splices in plywood signs. The Engineer will allow horizontal splices only for gore signs. Do not splice plywood sign panels, unless otherwise shown on the sign details. Do not

make horizontal splices through legends or symbols. Round the corners and remove burrs at corners and mounting holes.

Prepare the plywood high-density overlay surface for sheeting application by lightly abrading the surface with a product recommended by the sheeting supplier. Do not power sand. Wipe the surface with a solvent and allow to dry in accordance with the sheeting manufacturer's recommendations.

After preparing the plywood surface, ensure no grease, oil, or other contaminants come in contact with the surface.

3. **Aluminum Sheet.** Aluminum sheet for Type III and Type IV sign panels must meet the requirements of ASTM B 209 for aluminum alloy 6061-T6, 5052-H38, or 5154-H38.

   Aluminum sheet for Type III sign panels must be fabricated from nominal 0.080 inch thick aluminum sheet with mill tolerance meeting the requirements of ASTM B 209. Aluminum sheet for Type IV overlay sign panels must be fabricated from at least nominal 0.040 inch thick aluminum sheet, at least 0.037 inch thick.

   Round the corners and remove burrs at the corners and mounting holes.

   Degrease the aluminum sheet in accordance with the sheeting manufacturer's recommendations. After degreasing, surface treating, and rinsing, maintain sign panels free of grease, oil, or other contaminants.

B. **Sign Face and Legend Material.**

1. **Reflective Sheeting Material.** Select reflective sheeting for permanent signs from the Qualified Products List. Provide sheeting meeting the requirements of ASTM D 4956 and the ASTM Types specified in Table 919-3, unless otherwise required.

   Provide the Engineer with written certification that reflective sheeting meets the following requirements:

   a. Sheeting material on each sign is an approved product, obtained from the same sheeting manufacturer, and applied in accordance with the manufacturer's recommendations;
   b. Signs are manufactured in strict compliance with the sheeting manufacturer's requirements; and
   c. Each 145 foot length roll of reflective sheeting contains no splices.

Certification must include lot numbers, run numbers, shipping date, invoice number, stock number, and quantities of material for each sign shipment.

2. **Sheeting Application.** Fabricate and apply legends in accordance with the *Michigan Standard Highway Signs Manual*, or as shown on the plans.

3. **Direct Applied Reflective Legend.** Cut legends with a smooth, regular outline, free of ragged or torn edges, and with interior corners cut to $^{3}/_{16}$ inch $\pm^{1}/_{16}$ inch radius.

   Apply legends in accordance with the reflective sheeting manufacturer's recommendations.

   For Type I aluminum extruded sign sections, cut the legend components along each metal sign section joint after applying the legend.

4. **Non-Reflective Legend, Borders and Arrows.** If a black legend is required, it must be applied using ink, silkscreen method, or non-reflective sheeting. Black sheeting used for legend, borders, and arrows must be non- reflective material unless otherwise stated. Provide material and apply non-reflective legends, borders and arrows in accordance with the manufacturer's specifications.

C. **Sign Hardware.** Steel shapes, bars, and plates must meet the requirements of ASTM A 36, or Department-approved equal, and be hot-dip galvanized in accordance with ASTM A 123.

Bolts, nuts, washers, U-bolts, and straps must be stainless steel alloy meeting the requirements of ASTM A 320, for Class 1, Grade B8. Provide self-locking, nylon insert-type nuts meeting the requirements of ASTM A 320 and ASTM A 194 for Grade 8F. If using U-bolts formed from straight bar stock, ensure U-bolts are formed by cold working.

Aluminum alloy shapes and plates must meet ASTM B 308, for aluminum alloy 6061-T6.

Cast post clips must conform to ASTM B 108, for aluminum alloy 356.0-T6.

Table 919-3 Retroreflective Sign Sheeting Material Guidelines			
Sign Category	**Type**	**Material Type**	**Color**
Yellow Warning Signs	W-series (non school related), E13-1, E13-2, E11-1, OM-1, OM-2, OM-3	ASTM Type IX	Fluorescent Yellow
School Signs	S1-1, S4-3, S4-5, S4-5a, school portion of S5-1, W16-7p, W16-9p, W16-2, W16-2a	ASTM Type IX	Fluorescent Yellow Green
Freeway Guide Signs	White legends; borders; and arrows;	ASTM Type IX	White
Freeway Guide Signs	Backgound including M8 series signs	ASTM Type IV	Green, Brown, or Blue
Non Freeway Guide Signs	All	ASTM Type IV	White on Green, Brown or Blue
Regulatory Signs	Stop, Yield, parking, black on white signs	ASTM Type IV	—
Route Markers	—	ASTM Type IX	—

919.03. Delineators. Fabricate reflectors for delineators from plastic material or reflective sheeting material, as shown on the plans. Provide the Engineer a copy of the manufacturer's certification that reflectors and posts meet the requirements of this subsection.

A. **Plastic Reflectors.** Reflectors for mounting on rigid post must consist of a round, clear, and transparent plastic lens, with a back fused to the lens, under heat and pressure, around the perimeter to form a unit sealed against dust, water, and vapor. The unit must have a central mounting hole and the lens must have a nominal reflecting area of 7 square inches. The lens must have a smooth outside surface and an inside configuration which provides "cube-corner" retro-reflection. The manufacturer's trademark must be legibly molded into the face of the lens.

Plastic reflectors must have plastic or aluminum housing. An aluminum or plastic grommet with an inside diameter of $^{3}/_{16}$ inch must be expanded within the reflector mounting hole and flanged. The Contractor may use plastic reflector housing consisting of acrylonitrile butadiene styrene (ABS) plastic meeting the requirements of ASTM D 3965 with a tensile strength of at least 6,500 psi.

1. **Optical Performance.** At least 90 percent of the reflectors tested must meet or exceed the values specified in Table 919-4 for the required color. One hundred percent of the reflectors tested must meet or exceed 80 percent of the values specified.

Table 919-4 Specific Intensity (SI) of Plastic Reflectors for Delineators					
		SI candelas/foot-candle			
		Divergence Angle 0.1 degree		Divergence Angle 0.2 degree	
		Entrance Angle (degree)		Entrance Angle (degree)	
Color	Type	0	20	0	20
Crystal or Silver	A	120	50	84	35
Yellow	A	71	28	50	20
Red	A	29	11	21	8

B. **Reflective Sheeting Reflectors.** Reflective sheeting for mounting on flexible posts must meet the material, color, and resistance to weathering requirements of ASTM D 4956 for Type IX flexible high-intensity retroreflective sheeting.

When reflective sheeting reflectors are specified, or allowed for used in lieu of plastic reflectors, use yellow (amber) sheeting in place of yellow plastic reflectors and white (silver) sheeting in place of crystal plastic reflectors. Place a 3 inch by 6 inch piece of red reflective sheeting on the back side of the flexible post showing wrong-way movement for freeway ramps, as shown on the standard plans. Apply reflective sheeting in accordance with the manufacturer's specifications.

C. **Mounting Hardware.** Mounting hardware for plastic reflectors must consist of a solid aluminum pin with annular locking grooves and an aluminum crimp-type collar. Both the pin and the collar must meet the requirements of ASTM B 308, for aluminum alloy 6061.

The pin must be $^{3}/_{16}$ inch diameter, have a $^{7}/_{16}$ inch diameter bearing head, and have a grip length equal to the total thickness of material fastened together.

The collar must have a bearing diameter from $^{3}/_{8}$ inch to $^{7}/_{16}$ inch and be sized to fit the pin.

D. **Posts.** Provide steel or flexible plastic delineator posts, as shown on the plans. Steel delineator posts must have a nominal weight of 1.12 pounds per foot and meet the requirements of subsection 919.04 for steel posts. Select flexible plastic delineator posts from the Qualified Products List.

919.04. Steel Post Sign Supports and Square Tubular Steel Sign Supports. Steel post sign supports and square tubular steel sign supports, including sign posts, anchor sleeves, and anchor posts, must meet the requirements of ASTM A 702, for Type A or Type B.

A. **Steel Post Sign Supports.** The length of finished posts must be as shown on the plans. Posts must be straight with a smooth, uniform finish, free of cracks, flaws, injurious seams, laps, blisters, ragged and imperfect edges, or other defects affecting the strength, durability, or appearance of the posts. Cross-section and bolt hole diameter and spacing must meet the requirements shown on the sign support standard plans. The centers of the holes must coincide with the centerline of the posts. The punched bolt holes must provide a smooth, even sign post face. Holes and cutoff ends must be free of burrs.

After fabrication and hole punching, hot-dip galvanize steel posts in accordance with subsection 907.03.D.

Punched and coated posts must weigh at least 95 percent of the nominal weight shown on the plans.

B. **Square Tubular Steel Sign Supports.** Square tubular steel sign supports must meet the chemical, mechanical, and geometric properties of material used in the crash tests referenced in AASHTO Standard Specifications for Structural Supports for Highway Signs, Luminaries and Traffic Signals.

Sign posts, anchor sleeves, anchor posts, and connection hardware must be of the size and type shown on the Sign Support Standards.

Submit proof of compliance that the assembly was crash tested in accordance with AASHTO Standard Specifications for Luminaries and Traffic Signals. The proof of compliance must include a copy of the FHWA approval letter to the manufacturer, indicating that the FHWA interprets the crash test results as acceptable for use on federal-aid projects.

The sign post, anchor sleeve, and anchor post must be straight and have a smooth uniform finish, free from cracks and flaws or other defects affecting their strength or durability. All ends must be free from burrs and must be cut square to maintain telescoping characteristics.

Bolt holes of the diameter specified must be accurately spaced on all four sides of the sign post, anchor sleeve and anchor post. Holes must line up exactly opposite each other on opposing sides of the post in order to accommodate a bolt placed through two opposite sides. The center of the holes must coincide with the centerline of the sign post, anchor sleeve and anchor post.

The bolt holes must be punched so that the face of the sign post, anchor sleeve and anchor post will have a smooth even surface.

The sign post, anchor sleeve, and anchor post must be hot-dip galvanized, after fabrication and hole punching, in accordance with ASTM A 123 for Grade 65.

919.05. Sawed Wood Posts for Highway Signs. Sawed wood posts for highway signs must meet the requirements of section 912 and Sign Support Standard SIGN-210.

919.06. Breakaway Column Sign Supports. Structural steel for column sign supports and bolts, nuts, and washers for the structural steel joints must meet the requirements of Sign Support Standard SIGN-220.

Shims must be fabricated from brass shim stock or brass strip meeting the requirements of ASTM B 36, for copper alloy UNS No. C26000, half-hard rolled temper, or fabricated from galvanized sheeting meeting the requirements of ASTM A 526, for Coating Designation G 90.

Galvanizing runs or beads must be removed from contact surfaces of columns, plates, and washers.

Breakaway column sign supports must be welded and galvanized and must be within the dimension tolerances specified by subsection 919.07.

919.07. Cantilever Sign Supports.

A. **Types E and J.** Pipe for the vertical poles of types E and J supports, and horizontal arms of type E supports, must meet the requirements of ASTM A 53 for Grade B, Type E, or Type S steel pipe or the requirements of API 5L for Grade X42 to X52.

Pipe for the horizontal arms of type J, must meet the requirements of ASTM A 500, Grade B or the requirements of ASTM A 519-4140 annealed.

Gusset, flange, and base plates must meet the requirements of ASTM A 36 for structural steel. Plates must be free of sharp edges and irregularities.

B. **Castings.** Pole top and end cap castings must meet the requirements of ASTM A 126 for Class A castings.

C. **Bolts for Arm Connections.** Galvanized high-strength steel bolts, nuts, and washers for connecting arm connection flanges must meet the requirements of subsection 906.06.

D. **Dimension Tolerances.** Dimensional tolerances for each type of commodity must meet the requirements of ASTM A 6 or the ASTM standard applicable to the required material.

E. **Welding.** Weld in accordance with AWS D1.1, Structural Welding Code, "Steel" as amended by this section, or the contract.

F. **Galvanizing.** Galvanize steel anchor bolts for a length of at least 20 inches from the threaded end. Bolts, nuts, and washers must be hot-dip galvanized in accordance with ASTM A 153.

After welding assemblies and sign support attachments, blast clean base plates and welds to remove excess mill scale and welding slag. Blast clean other areas as directed by the Engineer. Hot-dip galvanize supports in accordance with ASTM A 123.

919.08. Truss Sign Supports. Before applying dead loads, trusses must be cambered so the ordinate is within the allowable tolerances at the center of the assembled truss for the span length and type shown on the plans. Ensure bearing surfaces fully contact each other in the relaxed position before tightening the flange bolts. The fabricator will determine the method of cambering the structure, with the Engineer's approval, to ensure the method does not induce stress into the truss.

A. **Materials.** Hollow structural tubing for horizontal arms must meet the requirements of ASTM A 500 for Grade B, the requirements of ASTM A 519-4140 annealed, or the requirements of API-5L for Grade X42. Safeguard hollow structural tubing against embrittlement in accordance with ASTM A 143.

Pipe for vertical poles must meet the requirements of ASTM A 53 for Grade B, Type E, or Type S steel pipe, or the requirements of API 5L for Grade X42 to X52.

Bar, plate, and rolled structural shapes must meet the requirements of ASTM A 36. Bars, plates, and shapes must be free of sharp edges and irregularities.

U-bolts and washers must meet the requirements of ASTM A 320, Grade B8, Class 1 stainless steel. Nuts must be self-locking nylon insert-type nuts meeting the requirements of ASTM A 320 for Grade B8F.

Nuts used in the upper clamp connection of the vertical end support assembly and on all U-bolts must be of the self-locking type.

Assemble truss unit flange connections and the alternate bolted, web-to-chord connection using galvanized high-strength steel bolts, nuts, and washers meeting the requirements specified by subsection 906.06.

B. **Welding.** Weld in accordance with AWS D1.1, Structural Welding Code, "Steel" as amended by section 919 or the contract.

C. **Dimension Tolerances.** Ensure cross sections, flatness, length, straightness, thickness, and camber of material, before and after fabrication, meet the tolerance requirements of ASTM A 6 and AWS D1.1.

D. **Galvanizing.** Truss units must be galvanized in accordance with ASTM A 123. Blast clean base plates and welds to remove excess mill scale and welding slag before galvanizing. Blast clean other areas as directed by the Engineer.

Provide safeguards meeting the requirements of ASTM A 384 and ASTM A 385 to obtain high quality galvanized coatings and minimize distortion and warpage during galvanizing.

Interconnect sections of fabricated pipe work or tube assemblies with open tee or miter joints and provide each enclosed section with a vent hole at each end to provide drainage for the molten zinc and to prevent hazard to personnel engaged in the galvanizing process.

Hot-dip galvanize individual pipe, tube, and bar members in accordance with ASTM A 123.

919.09. Overhead Lane Assignment Structures. Overhead lane assignment structures must meet the requirements of Sign Support Standard SIGN-760 and traffic signal typical plans.

919.10. Casings for Cantilever Drilled Piles. Casings for cantilever drilled piles must meet the requirements of ASTM A 252 for Grade 2 steel. Casings must be smooth, watertight, and capable of withstanding handling stresses and external subsurface pressures. Casing must have an inside diameter at least equal to the required shaft size.

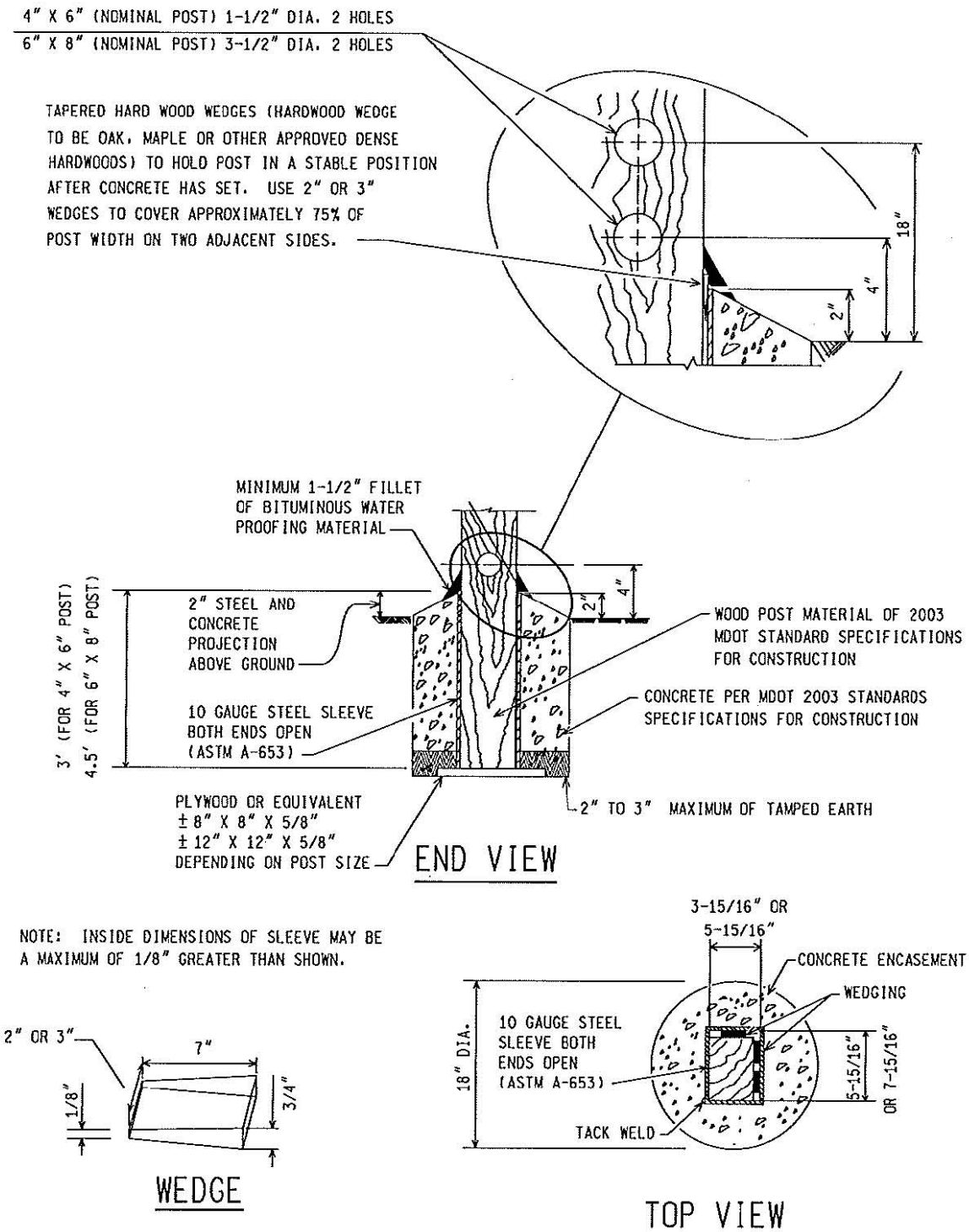

WOOD POST FOUNDATION DETAILS

MDOT	DEPARTMENT DIRECTOR Kirk T. Steudle	MICHIGAN DEPARTMENT OF TRANSPORTATION BUREAU OF HIGHWAY DEVELOPMENT STANDARD PLAN FOR			
PREPARED BY DESIGN DIVISION	APPROVED BY: DIRECTOR, BUREAU OF FIELD SERVICES	WOOD POSTS			
DRAWN BY: DHD	APPROVED BY: DIRECTOR, BUREAU OF HIGHWAY DEVELOPMENT	08/17/11 F.H.W.A. APPROVAL	03/01/05 PLAN DATE	SIGN-210-A	SHEET 1 OF 5
CHECKED BY: AJU					

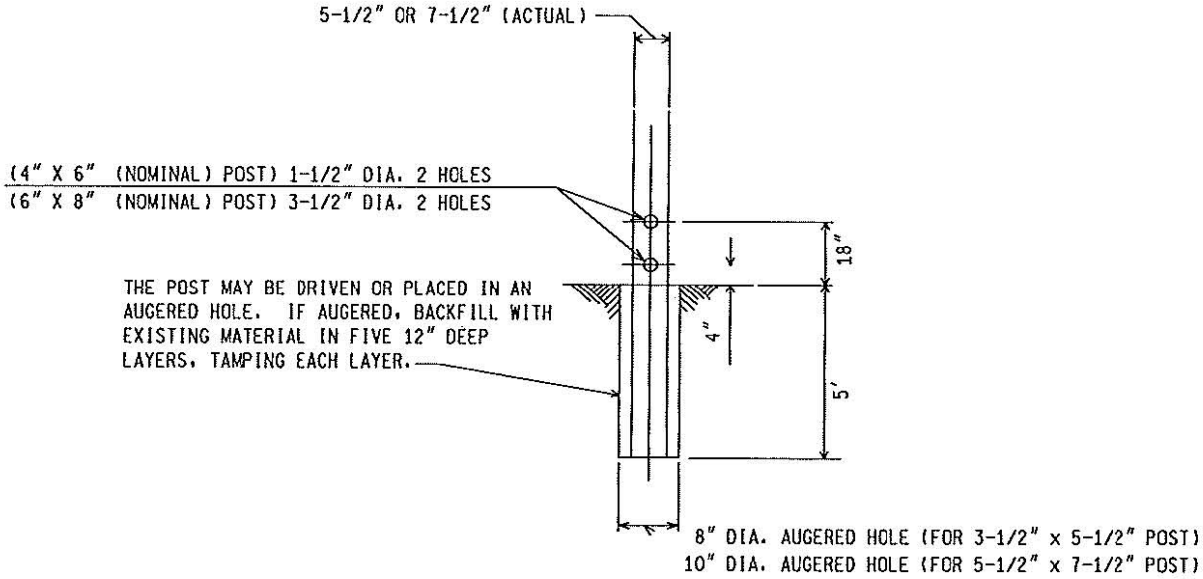

END VIEW

WOOD POST DIRECT EMBEDMENT DETAIL
SINGLE POST INSTALLATIONS ONLY

NOTE: DIRECT EMBEDMENT ONLY AT LOCATIONS IDENTIFIED IN PLANS OR PROPOSAL.

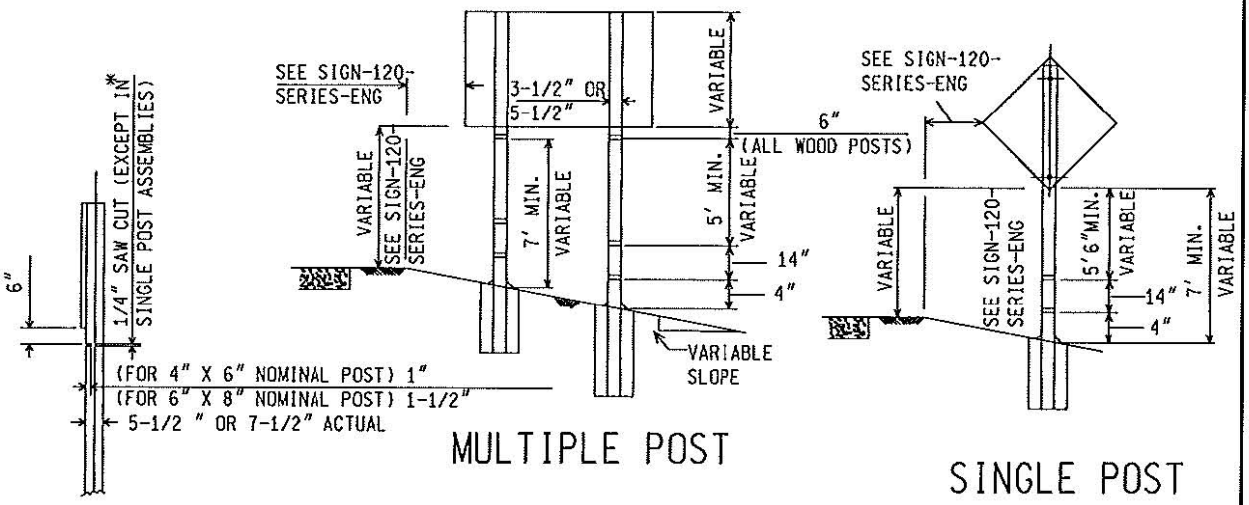

MULTIPLE POST

SINGLE POST

SAW CUT DETAIL

BREAKAWAY HOLES/SAWCUT RELATIONSHIP

*SAW CUT SHALL BE PLACED ON APPROACH TRAFFIC SIDE OF POST.

NOT TO SCALE

MICHIGAN DEPARTMENT OF TRANSPORTATION BUREAU OF HIGHWAY DEVELOPMENT STANDARD PLAN	08/17/11 F.H.W.A. APPROVAL	03/01/05 PLAN DATE	SIGN-210-A	SHEET 2 OF 5

NOTE: THE ORIGINAL SIGNED COPY IS KEPT ON FILE AT THE MICHIGAN DEPARTMENT OF TRANSPORTATION.

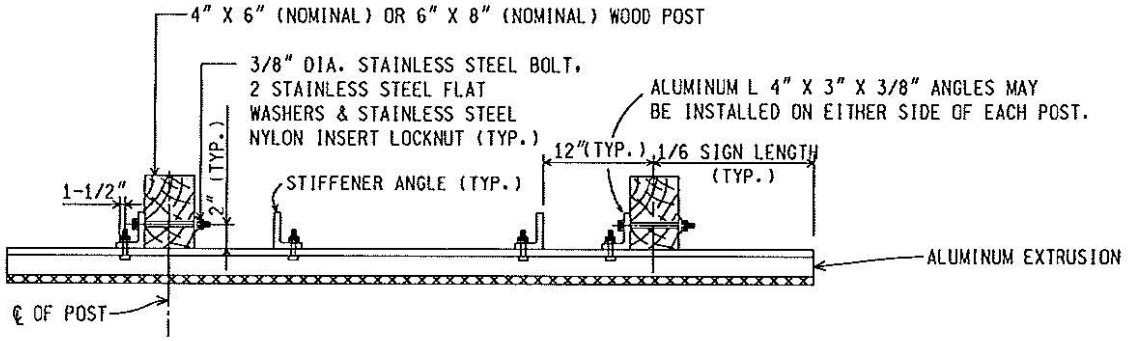

TOP VIEW
SINGLE TYPE I SIGN

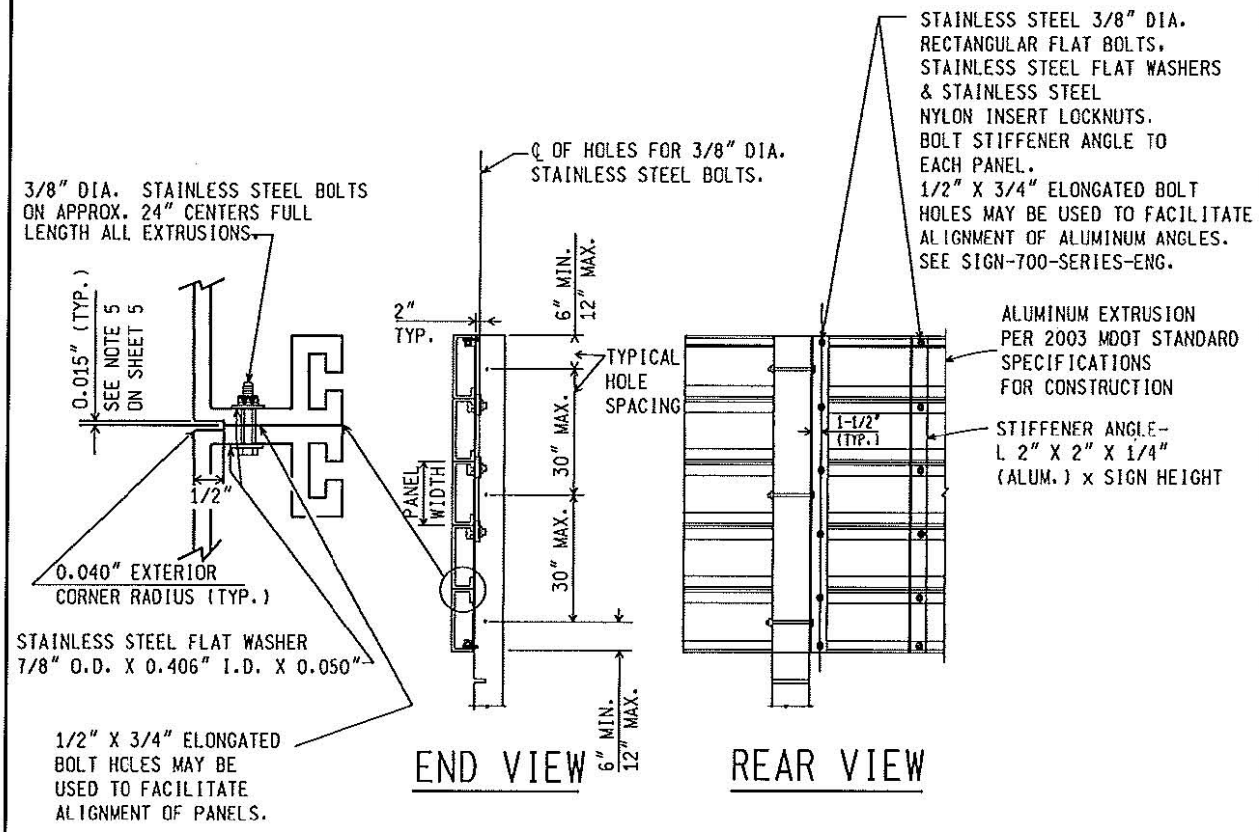

TYPE I SINGLE SIGN - ERECTION DETAILS

NOT TO SCALE

MICHIGAN DEPARTMENT OF TRANSPORTATION BUREAU OF HIGHWAY DEVELOPMENT STANDARD PLAN	08/17/11 F.H.W.A. APPROVAL	03/01/05 PLAN DATE	SIGN-210-A	SHEET 3 OF 5

NOTE: THE ORIGINAL SIGNED COPY IS KEPT ON FILE AT THE MICHIGAN DEPARTMENT OF TRANSPORTATION.

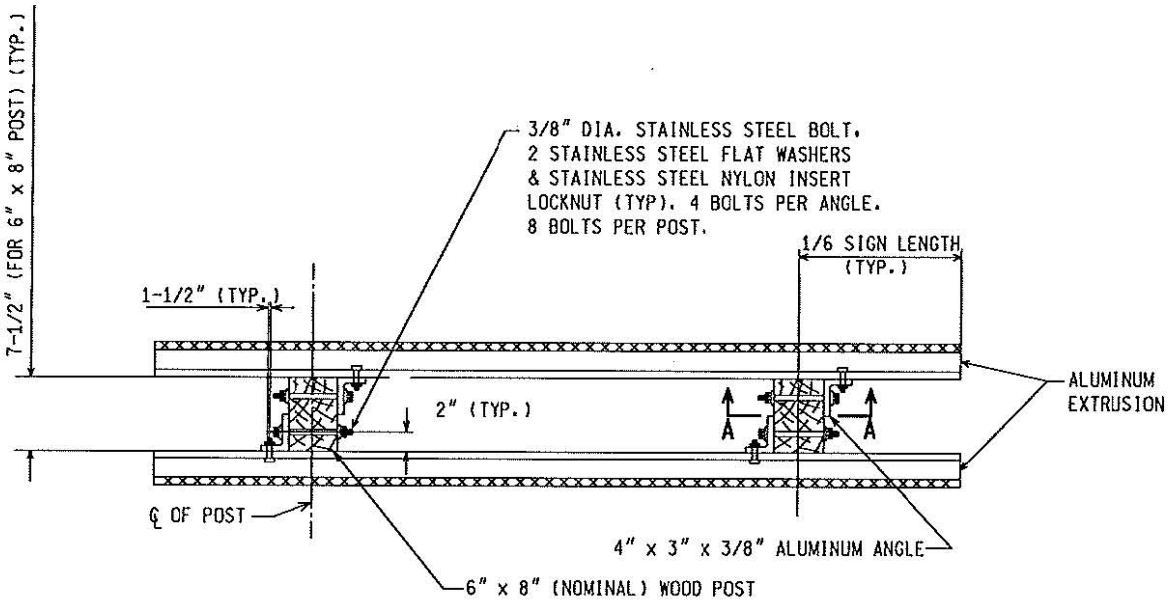

TOP VIEW

BACK-TO-BACK TYPE I SIGNS

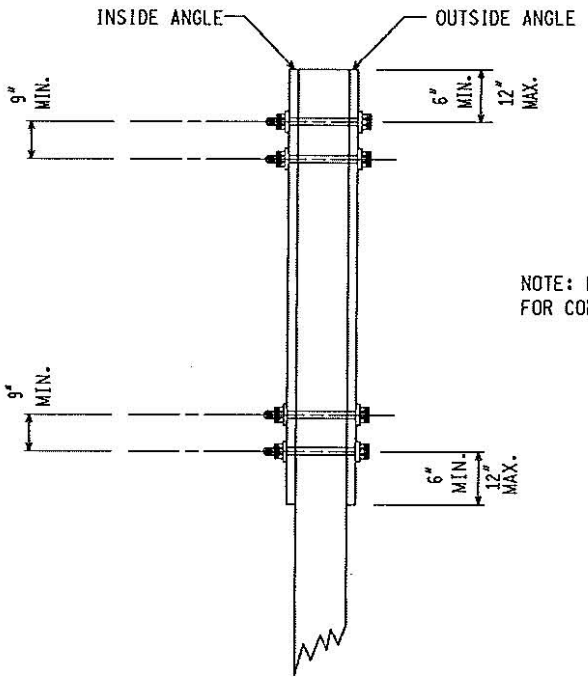

NOTE: REFER TO TYPE I SIGN-ERECTION DETAILS FOR CONNECTING ANGLES TO BACK OF SIGNS.

SECTION A-A

TYPE I BACK-TO-BACK SIGNS-ERECTION DETAILS

NOT TO SCALE

MICHIGAN DEPARTMENT OF TRANSPORTATION BUREAU OF HIGHWAY DEVELOPMENT STANDARD PLAN	08/17/11 F.H.W.A. APPROVAL	03/01/05 PLAN DATE	SIGN-210-A	SHEET 4 OF 5

NOTE: THE ORIGINAL SIGNED COPY IS KEPT ON FILE AT THE MICHIGAN DEPARTMENT OF TRANSPORTATION.

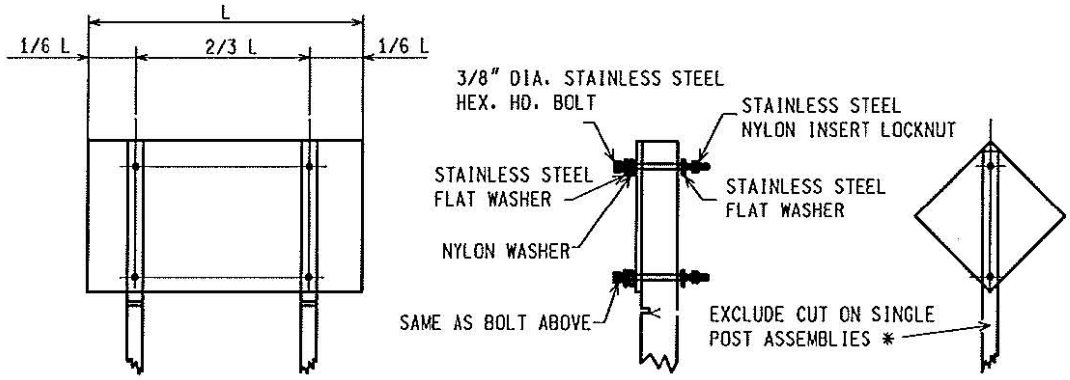

* SAW CUT SHALL BE PLACED ON APPROACH TRAFFIC SIDE OF POST.

CONNECTION DETAIL

TYPES II & III SIGNS - ERECTION DETAILS

NOTES:

1. THE DRILLED BREAKAWAY HOLES ARE TO BE CAREFULLY CENTERED ON THE POSTS.
2. ALL CONCRETE FOUNDATIONS SHALL BE FINISHED AS SHOWN AND ANY SURPLUS MATERIAL SHALL BE COMPLETELY REMOVED FROM RIGHT-OF-WAY. SIGNS SHALL NOT BE ERECTED ON WOOD POSTS FOR A MINIMUM OF 24 HOURS AFTER PLACEMENT OF THE CONCRETE.
3. THE PAY ITEM "SIGN, TYPE ___" INCLUDES ALL ATTACHING DEVICES AND HARDWARE.
4. WOOD POSTS MAY BE DIRECTLY EMBEDDED ONLY AT THOSE LOCATIONS IDENTIFIED IN THE PLANS OR PROPOSAL.
5. A 0.500" WIDE X 0.015" DEEP GROOVE SHALL RUN THE ENTIRE LENGTH AT TOP AND BOTTOM OF ALL EXTRUDED ALUMINUM PANELS TO ACCOMMODATE OVERLAP SHEETING.
6. ALL STAINLESS STEEL BOLTS, NUTS, AND WASHERS SHALL BE 2003 MDOT STANDARDS SPECIFICATIONS FOR CONSTRUCTION
7. FIELD DRILL ALUMINUM ANGLES AND WOOD POSTS.

NOT TO SCALE

MICHIGAN DEPARTMENT OF TRANSPORTATION BUREAU OF HIGHWAY DEVELOPMENT STANDARD PLAN	08/17/11 F.H.W.A. APPROVAL	03/01/05 PLAN DATE	SIGN-210-A	SHEET 5 OF 5

NOTE: THE ORIGINAL SIGNED COPY IS KEPT ON FILE AT THE MICHIGAN DEPARTMENT OF TRANSPORTATION.

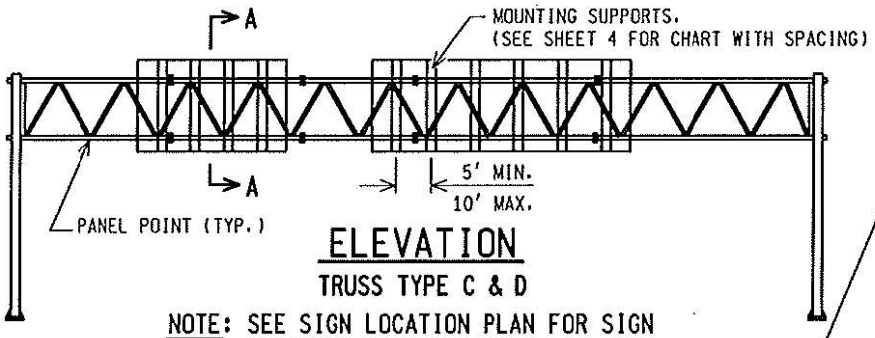

ELEVATION

TRUSS TYPE C & D

NOTE: SEE SIGN LOCATION PLAN FOR SIGN POSITIONING DIMENSIONS.

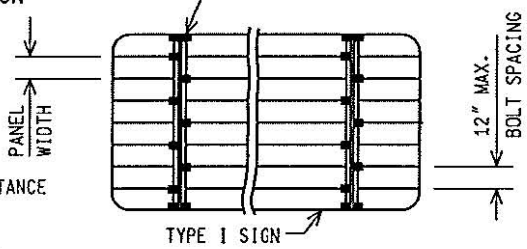

MOUNTING SUPPORT-BOLT ARRANGEMENT FOR OVERHEAD SIGNS

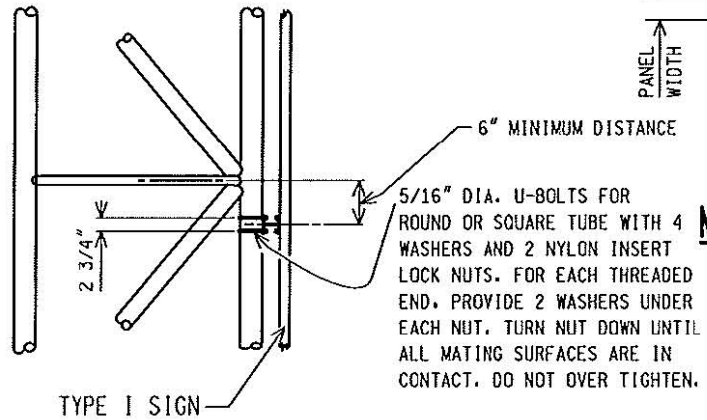

PLAN-TRUSS CONNECTION

TYP.- EACH CONNECTION

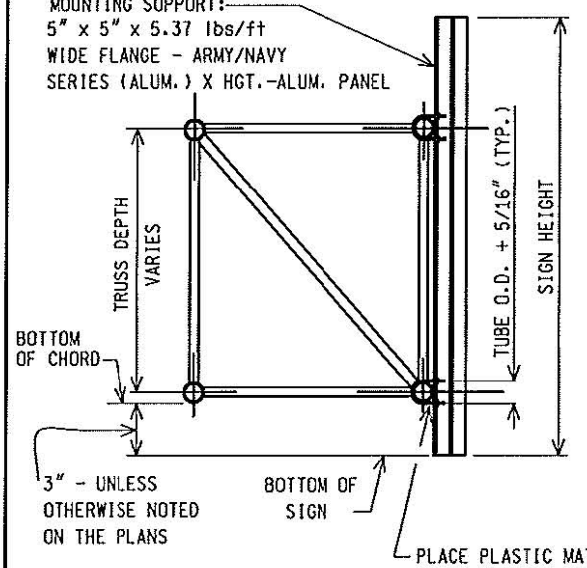

TRUSS

SECTION A-A

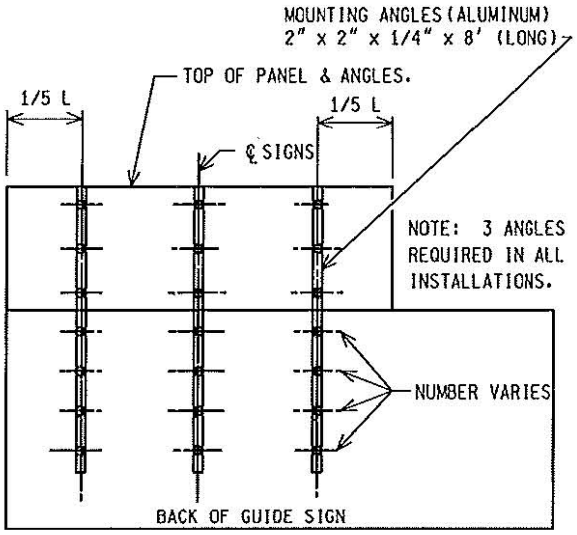

DETAIL OF EXIT NUMBER PANEL ERECTION TO OVERHEAD SIGNS

MDOT Michigan Department of Transportation PREPARED BY DESIGN DIVISION DRAWN BY: DHD CHECKED BY: AJU	DEPARTMENT DIRECTOR Kirk T. Steudle APPROVED BY: Randy V. Parthel DIRECTOR, BUREAU OF FIELD SERVICES APPROVED BY: Paul A. Van Poelgeest DIRECTOR, BUREAU OF HIGHWAY DEVELOPMENT	MICHIGAN DEPARTMENT OF TRANSPORTATION BUREAU OF HIGHWAY DEVELOPMENT STANDARD PLAN FOR TRUSS, CANTILEVER, COLUMN AND EXIT NUMBER CONNECTION DETAILS	
		08/08/11 F.H.W.A. APPROVAL	07/20/11 PLAN DATE	SIGN-700-B	SHEET 1 OF 5

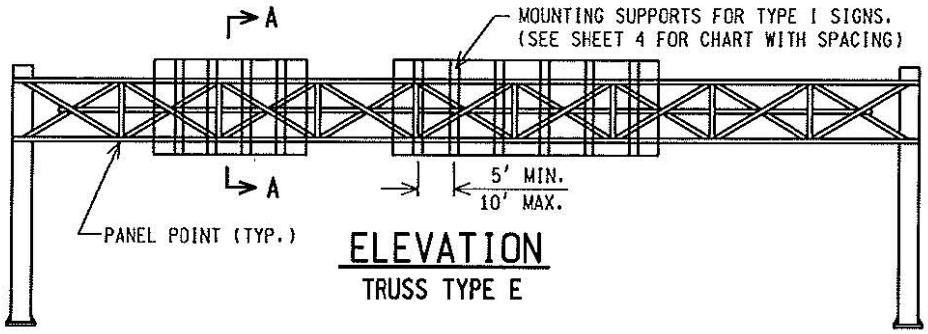

ELEVATION
TRUSS TYPE E

NOTE: SEE SIGN LOCATION PLAN FOR SIGN POSITIONING DIMENSIONS.

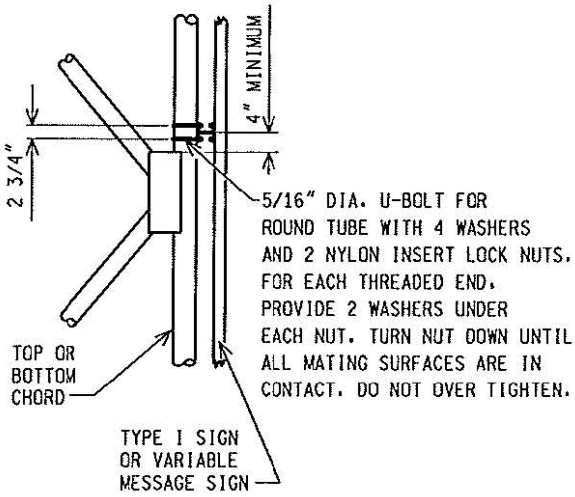

PLAN-TRUSS CONNECTION
TYP.- EACH CONNECTION

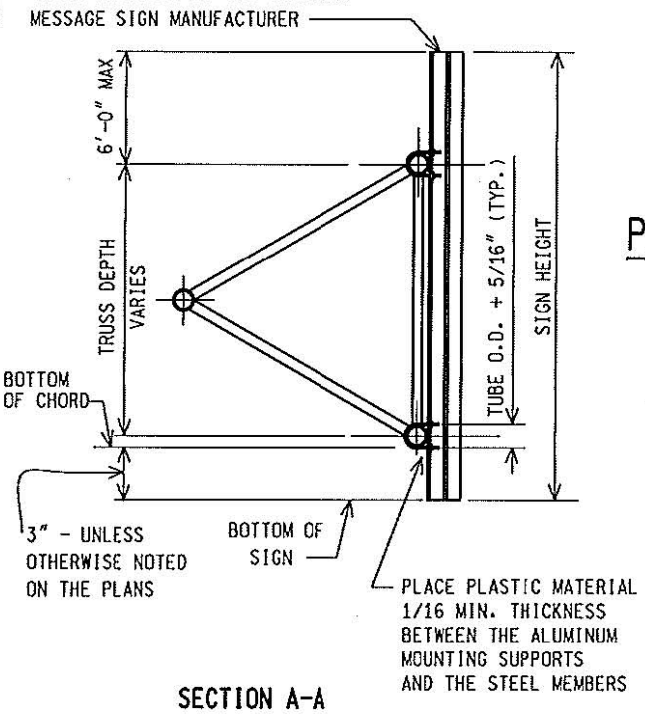

SECTION A-A
TRUSS TYPE E

NOTES:

1. FOR 7' TRUSS DEPTH:
   < 13' SIGN: 3" MAXIMUM BELOW BOTTOM TRUSS ARM
   ≥ 13' SIGN: CENTER THE SIGN ON THE TRUSS
2. FOR 9' TRUSS DEPTH:
   < 15' SIGN: 3" MAXIMUM BELOW BOTTOM TRUSS ARM
   ≥ 15' SIGN: CENTER THE SIGN ON THE TRUSS
3. UNDERCLEARANCE APPLIES TO LOWEST HANGING SIGN
4. MAXIMUM HEIGHT FROM TOP OF FOOTING TO BOTTOM OF TRUSS BOX = 25'

NOT TO SCALE

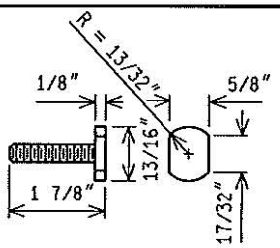

RECTANGULAR FLAT HEAD BOLT DETAIL

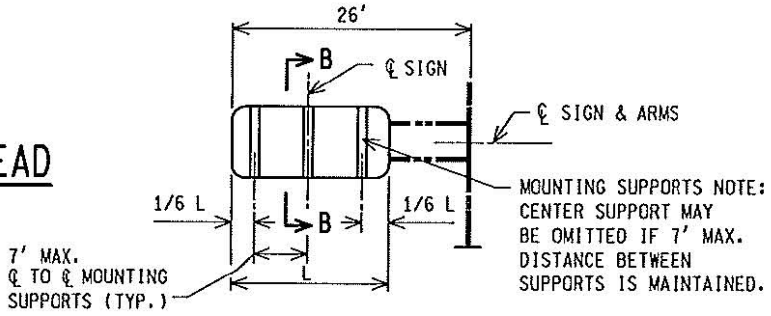

ELEVATION CANTILEVER

MOUNTING SUPPORT:
5" x 5" x 5.37 lbs/ft
WIDE FLANGE - ARMY/NAVY SERIES (ALUM.)
X HGT.-ALUM.
OR PLYWOOD PANEL.

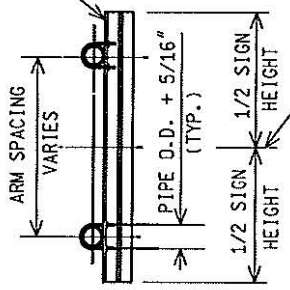

SECTION B-B

CANTILEVER

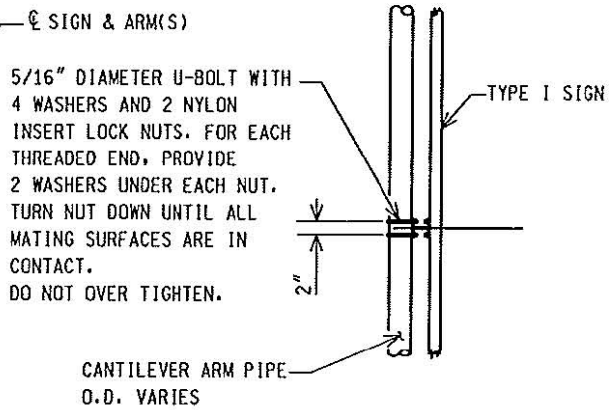

PLAN-CANTILEVER CONNECTION

TYP. EACH CONNECTION

"U"-BOLT DIMENSIONS				
TRUSS TYPE	CANTILEVER TYPE	INSIDE BEND DIAMETER (D)	INSIDE BEND RADIUS (R)	U-BOLT LENGTH
C(70') STEEL		4"		17 1/4"
C(100') STEEL		5"		20 1/4"
D(125') STEEL		5"		20 1/2"
	E	10 3/4"	5 3/8"	32"
E	J	6"	3"	20 1/4"

ALL U-BOLTS SHALL HAVE 2" THREAD LENGTH. (MIN.)

TYPE E TRUSS &
CANTILEVER U-BOLT

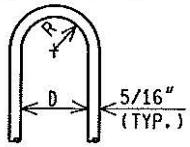

STEEL TRUSS U-BOLT

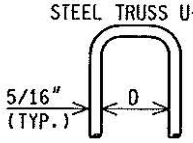

NOT TO SCALE

MICHIGAN DEPARTMENT OF TRANSPORTATION BUREAU OF HIGHWAY DEVELOPMENT STANDARD PLAN	08/08/11 F.H.W.A. APPROVAL	07/20/11 PLAN DATE	SIGN-700-B	SHEET 3 OF 5

NOTE: THE ORIGINAL SIGNED COPY IS KEPT ON FILE AT THE MICHIGAN DEPARTMENT OF TRANSPORTATION.

TRUSS MOUNTING SUPPORT SPACING			
SIGN LENGTH L (ft)	NUMBER OF MOUNTING SUPPORTS	EDGE OF SIGN TO NEAREST SUPPORT (ft)	DISTANCE BETWEEN SUPPORTS (ft)
$L \leq 8.0$	2	$\frac{L-5}{2}$	5
$8.5 \leq L \leq 16.5$	2	0.2L	0.6L
$17.0 \leq L \leq 28.5$	3	0.15L	0.35L
$29.0 \leq L \leq 43.0$	4	0.15L	$\frac{L-0.30L}{3}$

NOTE: THE DIMENSIONS ABOVE SERVE AS AN INITIAL STARTING POINT TO DETERMINE MOUNTING SUPPORT LOCATIONS. THE FABRICATOR SHOULD ADJUST SUPPORTS SLIGHTLY TO AVOID TRUSS "PANEL POINTS" WHILE MAINTAINING AS CLOSE AS POSSIBLE THE CHART SPACING AND ADHERING TO THE 5' MIN. - 10' MAX. SPACING RULE.

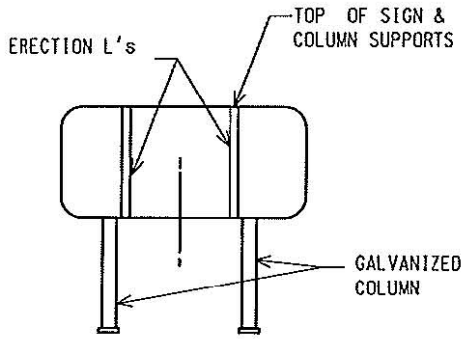

ELEVATION VIEW

STEEL COLUMN BREAKAWAY

ERECTION ANGLES TO REMAIN IN PLACE (2 REQ'D.) L2" x 2" x 1/4" (ALUM) X SIGN HEIGHT - SHOP CONNECT BY DIRECT BOLTING ON EACH PANEL. (SEE SHEET 3 FOR RECTANGULAR FLAT HEAD BOLT DETAIL). 1/2" x 3/4" ELONGATED HOLES MAY BE USED TO FACILITATE ALIGNMENT OF ERE

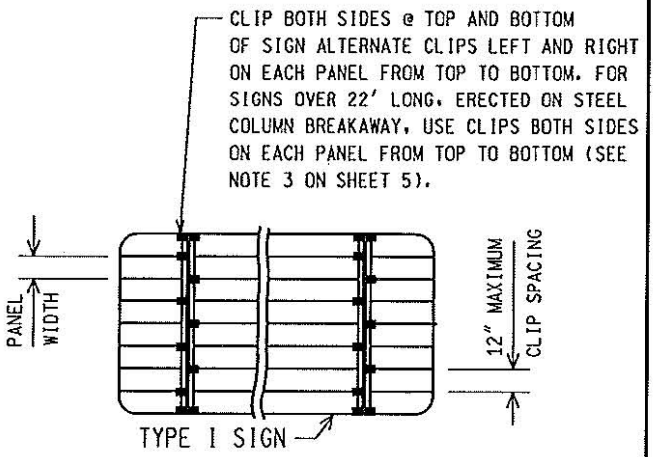

SIGN SUPPORT CLIP OR BOLT ARRANGEMENT FOR STEEL COLUMN BREAKAWAY

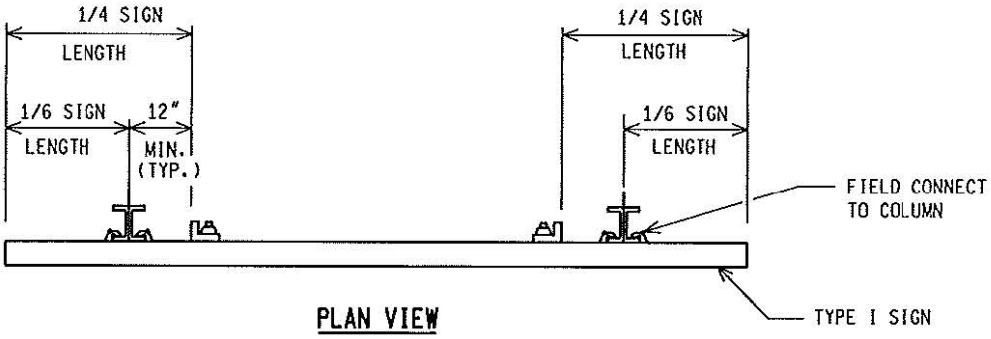

PLAN VIEW

STEEL COLUMN BREAKAWAY

NOT TO SCALE

MICHIGAN DEPARTMENT OF TRANSPORTATION BUREAU OF HIGHWAY DEVELOPMENT STANDARD PLAN	08/08/11 F.H.W.A. APPROVAL	07/20/11 PLAN DATE	SIGN-700-B	SHEET 4 OF 5

NOTE: THE ORIGINAL SIGNED COPY IS KEPT ON FILE AT THE MICHIGAN DEPARTMENT OF TRANSPORTATION.

NOTES FOR EXIT NUMBER PANEL ERECTION:

1. ALL MOUNTING ANGLES AND CONNECTIONS ARE INCLUDED IN THE PAY ITEM "SIGN, TYPE _".

2. SHIFT MOUNTING ANGLES A MINIMUM DISTANCE TO AVOID CONFLICT WITH GUIDE SIGN SUPPORTS.

3. WHERE GUIDE SIGN IS LESS THAN 6' IN HEIGHT, SHORTEN MOUNTING ANGLES TO MATCH BOTTOM OF GUIDE SIGN.

4. EXIT NUMBER PANEL SHALL BE DIRECT BOLTED AT TOP, MIDDLE AND BOTTOM TO MOUNTING ANGLE (3 BOLTS REQUIRED PER MOUNTING ANGLE). USE STAINLESS STEEL 3/8 DIAMETER RECTANGULAR FLAT HEAD BOLTS, FLAT WASHERS AND NYLON INSERT LOCKNUTS. 1/2" X 3/4" ELONGATED BOLT HOLES MAY BE USED TO FACILITATE ALIGNMENT OF MOUNTING SUPPORTS.

5. REFER TO PLAN SHEET FOR PLACEMENT OF RIGHT OR LEFT EXIT SIGN PANEL.

6. GUIDE SIGN STIFFENER ANGLES AND/OR ERECTION ANGLES SHALL NOT BE EXTENDED TO SERVE AS EXIT NUMBER PANEL MOUNTING ANGLES.

NOTES FOR OVERHEAD SIGN SUPPORT:

7. NEW WIDE FLANGE MOUNTING SUPPORTS SHALL BE SHOP CONNECTED TO ALL SIGNS BEFORE HANDLING FINISHED SIGN. (ARE INCLUDED IN THE PAY ITEM "SIGN, TYPE _".)

8. SIGNS TOO TALL TO BE SHIPPED IN ONE PIECE SHALL HAVE TEMPORARY SUPPORT ANGLES ATTACHED TO EACH PIECE PRIOR TO HANDLING. THE TEMPORARY SUPPORT ANGLES SHALL REMAIN ON THE SIGN UNTIL THE PERMANENT WIDE FLANGE MOUNTING SUPPORTS ARE ATTACHED. TEMPORARY SUPPORTS SHALL BE STEEL OR ALUMINUM ANGLES.

9. FOR ATTACHMENT OF TYPE I SIGN TO OVERHEAD SIGN MOUNTING SUPPORTS, USE STAINLESS STEEL 3/8" DIAMETER RECTANGULAR FLAT HEAD BOLTS, FLAT WASHERS AND NYLON INSERT LOCKNUTS. 1/2" X 3/4" ELONGATED BOLT HOLES MAYBE USED TO FACILITATE ALIGNMENT OF MOUNTING ONLY.

10. ALL U-BOLTS, BOLTS, AND ALL NYLON INSERT LOCKNUTS SHALL BE PER 2003 MDOT STANDARD SPECIFICATIONS FOR CONSTRUCTION.

NOTES FOR VARIABLE MESSAGE SIGNS:

11. TYPE I SIGNS SHALL NOT BE USED ON THE SAME TYPE E TRUSS AS VARIABLE MESSAGE SIGNS.

12. ATTACH VARIABLE MESSAGE SIGNS ON THE TYPE E TRUSS PER THE MANUFACTURERS RECOMMENDATIONS.

GENERAL NOTES :

13. NEW ERECTION ANGLES SHALL BE SHOP CONNECTED TO ALL SIGNS BEFORE HANDLING FINISHED SIGN. THEY ARE INCLUDED IN THE PAY ITEM "SIGN, TYPE _".

14. ALL CONNECTIONS ARE INCLUDED IN THE PAY ITEM "SIGN, TYPE _".

15. FOR SIGN PANEL CONNECTIONS, 3/8" DIAMETER STAINLESS STEEL BOLTS AND HEX NUTS AT 24" O.C SHALL BE USED.

16. TO ATTACH TYPE I SIGNS TO ROADSIDE STEEL COLUMN BREAKAWAYS, USE SIGN SUPPORT CLIPS ONLY.

NOT TO SCALE

MICHIGAN DEPARTMENT OF TRANSPORTATION BUREAU OF HIGHWAY DEVELOPMENT STANDARD PLAN	08/08/11 F.H.W.A. APPROVAL	07/20/11 PLAN DATE	SIGN-700-B	SHEET 5 OF 5

NOTE: THE ORIGINAL SIGNED COPY IS KEPT ON FILE AT THE MICHIGAN DEPARTMENT OF TRANSPORTATION.