STATE OF MICHIGAN
ENTERPRISE PROCUREMENT

Department of Technology, Management, and Budget
525 W. ALLEGAN ST., LANSING, MICHIGAN 48913
P.O. BOX 30026 LANSING, MICHIGAN 48909

CONTRACT CHANGE NOTICE

Change Notice Number **2**
to
Contract Number **071B4300154**

CONTRACTOR	
	Chemung Supply Corp
	98 Philo Road
	West Elmira, NY 14903
	Mike Menner
	607-733-5506
	mmenner@chemungsupply.com
	*******0890

STATE			
	Program Manager	Melissa Howe	MDOT
		517-636-4386	
		howem@michigan.gov	
	Contract Administrator	Yvon Dufour	DTMB
		(517) 284-6996	
		dufoury@michigan.gov	

CONTRACT SUMMARY			
REPLACEABLE UNDERBODY PLOW CUTTING EDGES			
INITIAL EFFECTIVE DATE	**INITIAL EXPIRATION DATE**	**INITIAL AVAILABLE OPTIONS**	**EXPIRATION DATE BEFORE**
September 15, 2014	September 14, 2015	4 - 1 Year	September 14, 2016
PAYMENT TERMS		**DELIVERY TIMEFRAME**	
		60 days ARO	
ALTERNATE PAYMENT OPTIONS		**EXTENDED PURCHASING**	
☐ P-Card ☐ Direct Voucher (DV) ☐ Other		☐ Yes ☒ No	
MINIMUM DELIVERY REQUIREMENTS			
N/A			

DESCRIPTION OF CHANGE NOTICE				
OPTION	**LENGTH OF OPTION**	**EXTENSION**	**LENGTH OF EXTENSION**	**REVISED EXP. DATE**
☒	one year	☐		September 14, 2017
CURRENT VALUE	**VALUE OF CHANGE NOTICE**	**ESTIMATED AGGREGATE CONTRACT VALUE**		
$436,613.86	$0.00	$436,613.86		

DESCRIPTION

Effective 8/26/2016, this contract is exercising the first option year. The revised contract expiration date is September 14, 2017. In addition, the Program Manager has been changed to Melissa Howe. All other terms, conditions, specifications, and pricing remain the same. Per DTMB and agency request, and DTMB Procurement approval.

Form No. DTMB-3521 (Rev. 7/2015)
AUTHORITY: Act 431 of 1984
COMPLETION: Required
PENALTY: Contract change will not be executed unless form is filed

STATE OF MICHIGAN
DEPARTMENT OF TECHNOLOGY, MANAGEMENT AND BUDGET
PROCUREMENT
P.O. BOX 30026, LANSING, MI 48909
OR
525 W. ALLEGAN, LANSING, MI 48933

CHANGE NOTICE NO. 1

to

CONTRACT NO. 071B4300154

between

THE STATE OF MICHIGAN

and

NAME & ADDRESS OF CONTRACTOR	PRIMARY CONTACT	EMAIL
Chemung Supply, Inc.	Mike Menner	mmenner@chemungsupply.com
98 Philo Road	PHONE	CONTRACTOR'S TAX ID NO. (LAST FOUR DIGITS ONLY)
West Elmira, NY 14903	1-607-733-5506	0890

STATE CONTACTS	AGENCY	NAME	PHONE	EMAIL
PROGRAM MANAGER / CCI	MDOT	Justin Droste	517-636-0518	drostej@michigan.gov
CONTRACT ADMINISTRATOR	DTMB	Yvon Dufour	517-284-6996	dufoury@michigan.gov

CONTRACT SUMMARY

DESCRIPTION: Replaceable Underbody Plow Cutting Edges

INITIAL EFFECTIVE DATE	INITIAL EXPIRATION DATE	INITIAL AVAILABLE OPTIONS	EXPIRATION DATE BEFORE CHANGE(S) NOTED BELOW
September 15, 2014	September 14, 2015	Four – 1 year options	September 14, 2015

PAYMENT TERMS	DELIVERY TIMEFRAME
Net 45 Days	60 Days ARO

ALTERNATE PAYMENT OPTIONS	EXTENDED PURCHASING
☐ P-card ☐ Direct Voucher (DV) ☐ Other	☐ Yes ☒ No

MINIMUM DELIVERY REQUIREMENTS

N/A

DESCRIPTION OF CHANGE NOTICE

EXERCISE OPTION?	LENGTH OF OPTION	EXERCISE EXTENSION?	LENGTH OF EXTENSION	REVISED EXP. DATE
☒	One year	☐		September 14, 2016

CURRENT VALUE	VALUE OF CHANGE NOTICE	ESTIMATED AGGREGATE CONTRACT VALUE
$268,050.86	$168,563.00	$436,613.86

DESCRIPTION: Effective September 15, 2015, this contract is exercising the first option year and is increased by $168,563. The revised contract expiration date is September 14, 2016. All other terms, conditions, specifications, and pricing remain the same. Per DTMB and agency request, DTMB Procurement approval, and State Administrative Board approval on 8/4/2015.

Form No. DTMB-3522 (Rev. 4/2012)
AUTHORITY: Act 431 of 1984
COMPLETION: Required
PENALTY: Contract will not be executed unless form is filed

STATE OF MICHIGAN
DEPARTMENT OF TECHNOLOGY, MANAGEMENT AND BUDGET
PROCUREMENT
P.O. BOX 30026, LANSING, MI 48909
OR
530 W. ALLEGAN, LANSING, MI 48933

NOTICE OF
CONTRACT NO. 071B4300154
between
THE STATE OF MICHIGAN
and

NAME & ADDRESS OF CONTRACTOR:	PRIMARY CONTACT	EMAIL
Chemung Supply, Inc.	Mike Menner	mmenner@chemungsupply.com
98 Philo Road	TELEPHONE	CONTRACTOR #, MAIL CODE
West Elmira, NY 14903	607-733-5506	

STATE CONTACTS	AGENCY	NAME	PHONE	EMAIL
CONTRACT COMPLIANCE INSPECTOR:	MDOT	Justin Droste	517-636-0518	drostej@michigan.gov
BUYER:	DTMB	Yvon Dufour	517-284-6996	dufoury@michigan.gov

CONTRACT SUMMARY:			
DESCRIPTION: Replaceable Underbody Plow Cutting Edges			
Optional Use			
INITIAL TERM	EFFECTIVE DATE	INITIAL EXPIRATION DATE	AVAILABLE OPTIONS
One Year	September 15, 2014	September 14, 2015	Four One year Options
PAYMENT TERMS	F.O.B	SHIPPED	SHIPPED FROM
Net 45 Days	Delivered	60 Days ARO	N/A
ALTERNATE PAYMENT OPTIONS:			AVAILABLE TO MiDEAL PARTICIPANTS
☐ P-card ☐ Direct Voucher (DV) ☐ Other			☐ YES ☒ NO
MINIMUM DELIVERY REQUIREMENTS:			
No minimum order requirement			
MISCELLANEOUS INFORMATION:			
N/A			
ESTIMATED CONTRACT VALUE AT TIME OF EXECUTION:	$268,050.86		

Form No. DTMB-3522 (Rev. 4/2012)
AUTHORITY: Act 431 of 1984
COMPLETION: Required
PENALTY: Contract will not be executed unless form is filed

STATE OF MICHIGAN
DEPARTMENT OF TECHNOLOGY, MANAGEMENT AND BUDGET
PROCUREMENT
P.O. BOX 30026, LANSING, MI 48909
OR
530 W. ALLEGAN, LANSING, MI 48933

CONTRACT NO. 071B4300154

between

THE STATE OF MICHIGAN

and

NAME & ADDRESS OF CONTRACTOR:	PRIMARY CONTACT	EMAIL
Chemung Supply, Inc. 98 Philo Road West Elmira, NY 14903	Mike Menner	mmenner@chemungsupply.com
	TELEPHONE	**CONTRACTOR #, MAIL CODE**
	607-733-5506	

STATE CONTACTS	AGENCY	NAME	PHONE	EMAIL
CONTRACT COMPLIANCE INSPECTOR:	MDOT	Justin Droste	517-636-0518	drostej@michigan.gov
BUYER:	DTMB	Yvon Dufour	517-284-6996	dufoury@michigan.gov

CONTRACT SUMMARY:			
DESCRIPTION: Replaceable Underbody Plow Cutting Edges			
Optional Use			
INITIAL TERM	**EFFECTIVE DATE**	**INITIAL EXPIRATION DATE**	**AVAILABLE OPTIONS**
One Year	September 15, 2014	September 14, 2015	Four One year Options
PAYMENT TERMS	**F.O.B**	**SHIPPED**	**SHIPPED FROM**
Net 45 Days	Delivered	60 Days ARO	N/A
ALTERNATE PAYMENT OPTIONS:			**AVAILABLE TO MiDEAL PARTICIPANTS**
☐ P-card ☐ Direct Voucher (DV) ☐ Other			☐ YES ☒ NO
MINIMUM DELIVERY REQUIREMENTS:			
No minimum order requirement			
MISCELLANEOUS INFORMATION:			
N/A			
ESTIMATED CONTRACT VALUE AT TIME OF EXECUTION:	**$268,050.86**		

THIS IS NOT AN ORDER: This Contract Agreement is awarded on the basis of our inquiry bearing the solicitation #007114B0002890. Orders for delivery will be issued through the issuance of a Purchase Order Form.

Notice of Contract #: 071B4300154

FOR THE CONTRACTOR:	**FOR THE STATE:**
Chemung Supply, Inc.	
Firm Name	Signature
	Rebecca Cook/Division Director
Authorized Agent Signature	Name/Title
	DTMB Procurement
Authorized Agent (Print or Type)	Enter Name of Agency
Date	Date

STATE OF MICHIGAN

STANDARD CONTRACT TERMS

This STANDARD CONTRACT ("**Contract**") is agreed to between the State of Michigan (the "**State**") and Chemung Supply Corp. ("**Contractor**"), a New York Corporation. This Contract is effective on September 15, 2014 ("**Effective Date**"), and unless terminated, expires on September 14, 2015.

Contract Term

The Contract term begins **September 15, 2014** and expires **September 14, 2015**. All outstanding Purchase Orders will expire upon the termination of the Contract for any of the reasons listed in Section 2.16, Termination by the State, unless otherwise agreed to in writing. Absent an early termination, Purchase Orders issued, but not expired, by the end of the Contract's term will remain in effect until the next September 30.

Options to Renew

This Contract may be renewed for up to four (4) additional one (1) year period(s). Renewal must be by mutual written agreement of the parties.

The parties agree as follows:

1. **Duties of Contractor.** Contractor must perform the services and provide the deliverables described in **Exhibit A – Statement of Work** (the "**Contract Activities**"). An obligation to provide delivery of any commodity is considered a service and is a Contract Activity.

Contractor must furnish all labor, equipment, materials, and supplies necessary for the performance of the Contract Activities, and meet operational standards, unless otherwise specified in Exhibit A.

Contractor must: (a) perform the Contract Activities in a timely, professional, safe, and workmanlike manner consistent with standards in the trade, profession, or industry; (b) meet or exceed the performance and operational standards, and specifications of the Contract; (c) provide all Contract Activities in good quality, with no material defects; (d) not interfere with the State's operations; (e) obtain and maintain all necessary licenses, permits or other authorizations necessary for the performance of the Contract; (f) cooperate with the State, including the State's quality assurance personnel, and any third party to achieve the objectives of the Contract; (g) return to the State any State-furnished equipment or other resources in the same condition as when provided when no longer required for the Contract; (h) not make any media releases without prior written authorization from the State; (i) assign to the State any claims resulting from state or federal antitrust violations to the extent that those violations concern materials or services supplied by third parties toward fulfillment of the Contract; (j) comply with all State physical and IT security policies and standards which will be made available upon request; and (k) provide the State priority in performance of the Contract except as mandated by federal disaster response requirements. Any breach under this paragraph is considered a material breach.

Contractor must also be clearly identifiable while on State property by wearing identification issued by the State, and clearly identify themselves whenever making contact with the State.

2. **Notices.** All notices and other communications required or permitted under this Contract must be in writing and will be considered given and received: (a) when verified by written receipt if sent by courier; (b) when actually received if sent by mail without verification of receipt; or (c) when verified by automated receipt or electronic logs if sent by facsimile or email.

If to State:	If to Contractor:
Yvon Dufour *525 W. Allegan,* *Constitution Hall, 1st Floor NE* *Lansing, MI 48933* *dufoury@michigan.gov* *(517) 284-6996*	*Mike Menner* *2420 Corning Road* *Elmira, NY 14903* *mmenner@chemungsupply.com* *607-733-5506*

3. **Contract Administrator.** The Contract Administrator for each party is the only person authorized to modify any terms and conditions of this Contract (each a "**Contract Administrator**"):

If to State:	If to Contractor:
Yvon Dufour *525 W. Allegan,* *Constitution Hall, 1st Floor NE* *Lansing, MI 48933* *dufoury@michigan.gov* *(517) 284-6996*	*Mike Menner* *2420 Corning Road* *Elmira, NY 14903* *mmenner@chemungsupply.com* *607-733-5506*

4. **Program Manager.** The Program Manager for each party will monitor and coordinate the day-to-day activities of the Contract (each a "**Program Manager**"):

If to State:	If to Contractor:
Justin Droste *MDOT Operations Field Services* *6333 Lansing Road,* *Lansing, MI 48917* *drostej@michigan.gov* *(517) 636-0518*	*Mike Menner* *2420 Corning Road* *Elmira, NY 14903* *mmenner@chemungsupply.com* *607-733-5506*

5. **Performance Guarantee**. Contractor must at all times have financial resources sufficient, in the opinion of the State, to ensure performance of the Contract and must provide proof upon request. The State may require a performance bond (as specified in Exhibit A) if, in the opinion of the State, it will ensure performance of the Contract.

6. **Insurance Requirements.** Contractor must maintain the insurances identified below and is responsible for all deductibles. All required insurance must: (a) protect the State from claims that may arise out of, are alleged to arise out of, or result from Contractor's or a subcontractor's performance; (b) be primary and non-contributing to any comparable liability insurance (including self-insurance) carried by the State; and (c) be provided by an company with an A.M. Best rating of "A" or better and a financial size of VII or better.

Insurance Type	Additional Requirements
Commercial General Liability Insurance	
Minimal Limits: $1,000,000 Each Occurrence Limit $1,000,000 Personal & Advertising Injury Limit $2,000,000 General Aggregate Limit $2,000,000 Products/Completed Operations Deductible Maximum: $50,000 Each Occurrence	Contractor must have their policy: (1) endorsed to add "the State of Michigan, its departments, divisions, agencies, offices, commissions, officers, employees, and agents" as additional insureds using endorsement CG 20 10 11 85, or both CG 2010 07 04 and CG 2037 07 04; (2) include a waiver of subrogation; and (3) for a claims-made policy, provide 3 years of tail coverage.
Umbrella or Excess Liability Insurance	
Minimal Limits: $10,000,000 General Aggregate	Contractor must have their policy: (1) endorsed to add "the State of Michigan, its departments,

	divisions, agencies, offices, commissions, officers, employees, and agents" as additional insureds, and (2) include a waiver of subrogation.
Motor Vehicle Insurance	
Minimal Limits: $1,000,000 Per Occurrence	
Workers' Compensation Insurance	
Minimal Limits: Coverage according to applicable laws governing work activities.	Waiver of subrogation, except where waiver is prohibited by law.
Employers Liability Insurance	
Minimal Limits: $100,000 Each Accident $100,000 Each Employee by Disease $500,000 Aggregate Disease.	

If Contractor's policy contains limits higher than the minimum limits, the State is entitled to coverage to the extent of the higher limits. The minimum limits are not intended, and may not be construed to limit any liability or indemnity of Contractor to any indemnified party or other persons.

Contractor must: (a) provide insurance certificates to the Contract Administrator, containing the agreement or purchase order number, at Contract formation and within 20 calendar days of the expiration date of the applicable policies; (b) require that subcontractors maintain the required insurances contained in this Section; (c) notify the Contract Administrator within 5 business days if any insurance is cancelled; and (d) waive all rights against the State for damages covered by insurance. Failure to maintain the required insurance does not limit this waiver.

7. **Reserved**

8. **Reserved**

9. **Independent Contractor.** Contractor is an independent contractor and assumes all rights, obligations and liabilities set forth in this Contract. Contractor, its employees, and agents will not be considered employees of the State. No partnership or joint venture relationship is created by virtue of this Contract. Contractor, and not the State, is responsible for the payment of wages, benefits and taxes of Contractor's employees and any subcontractors. Prior performance does not modify Contractor's status as an independent contractor.

10. **Subcontracting.** Contractor may not delegate any of its obligations under the Contract without the prior written approval of the State. Contractor must notify the State at least 90 calendar days before the proposed delegation, and provide the State any information it requests to determine whether the delegation is in its best interest. If approved, Contractor must: (a) be the sole point of contact regarding all contractual matters, including payment and charges for all Contract Activities; (b) make all payments to the subcontractor; and (c) incorporate the terms and conditions contained in this Contract in any subcontract with a subcontractor. Contractor remains responsible for the completion of the Contract Activities, compliance with the terms of this Contract, and the acts and omissions of the subcontractor. The State, in its sole discretion, may require the replacement of any subcontractor.

11. **Staffing.** The State's Contract Administrator may require Contractor to remove or reassign personnel by providing a notice to Contractor.

12. **Background Checks.** Upon request, Contractor must perform background checks on all employees and subcontractors and its employees prior to their assignment. The scope is at the discretion of the State and documentation must be provided as requested. Contractor is responsible for all costs

associated with the requested background checks. The State, in its sole discretion, may also perform background checks.

13. **Assignment.** Contractor may not assign this Contract to any other party without the prior approval of the State. Upon notice to Contractor, the State, in its sole discretion, may assign in whole or in part, its rights or responsibilities under this Contract to any other party. If the State determines that a novation of the Contract to a third party is necessary, Contractor will agree to the novation, provide all necessary documentation and signatures, and continue to perform, with the third party, its obligations under the Contract.

14. **Change of Control.** Contractor will notify, at least 90 calendar days before the effective date, the State of a change in Contractor's organizational structure or ownership. For purposes of this Contract, a change in control means any of the following: (a) a sale of more than 50% of Contractor's stock; (b) a sale of substantially all of Contractor's assets; (c) a change in a majority of Contractor's board members; (d) consummation of a merger or consolidation of Contractor with any other entity; (e) a change in ownership through a transaction or series of transactions; (f) or the board (or the stockholders) approves a plan of complete liquidation. A change of control does not include any consolidation or merger effected exclusively to change the domicile of Contractor, or any transaction or series of transactions principally for bona fide equity financing purposes.

    In the event of a change of control, Contractor must require the successor to assume this Contract and all of its obligations under this Contract.

15. **Ordering.** Contractor is not authorized to begin performance until receipt of authorization as identified in Exhibit A.

16. **Acceptance.** Contract Activities are subject to inspection and testing by the State within 30 calendar days of the State's receipt of them ("**State Review Period**"), unless otherwise provided in Exhibit A. If the Contract Activities are not fully accepted by the State, the State will notify Contractor by the end of the State Review Period that either: (a) the Contract Activities are accepted, but noted deficiencies must be corrected; or (b) the Contract Activities are rejected. If the State finds material deficiencies, it may: (i) reject the Contract Activities without performing any further inspections; (ii) demand performance at no additional cost; or (iii) terminate this Contract in accordance with Section 23, Termination for Cause.

    Within 10 business days from the date of Contractor's receipt of notification of acceptance with deficiencies or rejection of any Contract Activities, Contractor must cure, at no additional cost, the deficiency and deliver unequivocally acceptable Contract Activities to the State. If acceptance with deficiencies or rejection of the Contract Activities impacts the content or delivery of other non-completed Contract Activities, the parties' respective Program Managers must determine an agreed to number of days for re-submission that minimizes the overall impact to the Contract. However, nothing herein affects, alters, or relieves Contractor of its obligations to correct deficiencies in accordance with the time response standards set forth in this Contract.

    If Contractor is unable or refuses to correct the deficiency within the time response standards set forth in this Contract, the State may cancel the order in whole or in part. The State, or a third party identified by the State, may perform the Contract Activities and recover the difference between the cost to cure and the Contract price plus an additional 10% administrative fee.

17. **Delivery.** Contractor must deliver all Contract Activities F.O.B. destination, within the State premises with transportation and handling charges paid by Contractor, unless otherwise specified in Exhibit A. All containers and packaging becomes the State's exclusive property upon acceptance.

18. **Risk of Loss and Title.** Until final acceptance, title and risk of loss or damage to Contract Activities remains with Contractor. Contractor is responsible for filing, processing, and collecting all damage claims. The State will record and report to Contractor any evidence of visible damage. If the State rejects the Contract Activities, Contractor must remove them from the premises within 10 calendar days after notification of rejection. The risk of loss of rejected or non-conforming Contract Activities remains with Contractor. Rejected Contract Activities not removed by Contractor within 10 calendar days will be deemed abandoned by Contractor, and the State will have the right to dispose of it as its own property.

Contractor must reimburse the State for costs and expenses incurred in storing or effecting removal or disposition of rejected Contract Activities.

19. **Warranty Period**. The warranty period, if applicable, for Contract Activities is a fixed period commencing on the date specified in Exhibit A. If the Contract Activities do not function as warranted during the warranty period the State may return such non-conforming Contract Activities to the Contractor for a full refund.

20. **Terms of Payment.** Invoices must conform to the requirements communicated from time-to-time by the State. All undisputed amounts are payable within 45 days of the State's receipt. Contractor may only charge for Contract Activities performed as specified in Exhibit A. Invoices must include an itemized statement of all charges. The State is exempt from State sales tax for direct purchases and may be exempt from federal excise tax, if Contract Activities purchased under the Contract are for the State's exclusive use. Prices are exclusive of all taxes, and Contractor is solely responsible for payment of any applicable taxes.

    The State has the right to withhold payment of any disputed amounts until the parties agree as to the validity of the disputed amount. The State will notify Contractor of any dispute within a reasonable time. Payment by the State will not constitute a waiver of any rights as to Contractor's continuing obligations, including claims for deficiencies or substandard Contract Activities. Contractor's acceptance of final payment by the State constitutes a waiver of all claims by Contractor against the State for payment under this Contract, other than those claims previously filed in writing on a timely basis and still disputed.

    The State will only disburse payments under this Contract through Electronic Funds Transfer (EFT). Contractor must register with the State at http://www.michigan.gov/cpexpress to receive electronic fund transfer payments. If Contractor does not register, the State is not liable for failure to provide payment. Without prejudice to any other right or remedy it may have, the State reserves the right to set off at any time any amount then due and owing to it by Contractor against any amount payable by the State to Contractor under this Contract.

21. **Liquidated Damages.** Liquidated damages, if applicable, will be assessed as described in Exhibit A.

22. **Stop Work Order.** The State may suspend any or all activities under the Contract at any time. The State will provide Contractor a written stop work order detailing the suspension. Contractor must comply with the stop work order upon receipt. Within 90 calendar days, or any longer period agreed to by Contractor, the State will either: (a) issue a notice authorizing Contractor to resume work, or (b) terminate the Contract or purchase order. The State will not pay for Contract Activities, Contractor's lost profits, or any additional compensation during a stop work period.

23. **Termination for Cause.** The State may terminate this Contract for cause, in whole or in part, if Contractor, as determined by the State: (a) endangers the value, integrity, or security of any location, data, or personnel; (b) becomes insolvent, petitions for bankruptcy court proceedings, or has an involuntary bankruptcy proceeding filed against it by any creditor; (c) engages in any conduct that may expose the State to liability; (d) breaches any of its material duties or obligations; or (e) fails to cure a breach within the time stated in a notice of breach. Any reference to specific breaches being material breaches within this Contract will not be construed to mean that other breaches are not material.

    If the State terminates this Contract under this Section, the State will issue a termination notice specifying whether Contractor must: (a) cease performance immediately, or (b) continue to perform for a specified period. If it is later determined that Contractor was not in breach of the Contract, the termination will be deemed to have been a Termination for Convenience, effective as of the same date, and the rights and obligations of the parties will be limited to those provided in Section 24, Termination for Convenience.

    The State will only pay for amounts due to Contractor for Contract Activities accepted by the State on or before the date of termination, subject to the State's right to set off any amounts owed by the Contractor for the State's reasonable costs in terminating this Contract. The Contractor must pay all reasonable costs incurred by the State in terminating this Contract for cause, including administrative costs,

attorneys' fees, court costs, transition costs, and any costs the State incurs to procure the Contract Activities from other sources.

24. **Termination for Convenience.** The State may immediately terminate this Contract in whole or in part without penalty and for any reason, including but not limited to, appropriation or budget shortfalls. The termination notice will specify whether Contractor must: (a) cease performance of the Contract Activities immediately, or (b) continue to perform the Contract Activities in accordance with Section 25, Transition Responsibilities. If the State terminates this Contract for convenience, the State will pay all reasonable costs, as determined by the State, for State approved Transition Responsibilities.

25. **Transition Responsibilities.** Upon termination or expiration of this Contract for any reason, Contractor must, for a period of time specified by the State (not to exceed 90 calendar days), provide all reasonable transition assistance requested by the State, to allow for the expired or terminated portion of the Contract Activities to continue without interruption or adverse effect, and to facilitate the orderly transfer of such Contract Activities to the State or its designees. Such transition assistance may include, but is not limited to: (a) continuing to perform the Contract Activities at the established Contract rates; (b) taking all reasonable and necessary measures to transition performance of the work, including all applicable Contract Activities, training, equipment, software, leases, reports and other documentation, to the State or the State's designee; (c) taking all necessary and appropriate steps, or such other action as the State may direct, to preserve, maintain, protect, or return to the State all materials, data, property, and confidential information provided directly or indirectly to Contractor by any entity, agent, vendor, or employee of the State; (d) transferring title in and delivering to the State, at the State's discretion, all completed or partially completed deliverables prepared under this Contract as of the Contract termination date; and (e) preparing an accurate accounting from which the State and Contractor may reconcile all outstanding accounts (collectively, "**Transition Responsibilities**"). This Contract will automatically be extended through the end of the transition period.

26. **General Indemnification.** Contractor must defend, indemnify and hold the State, its departments, divisions, agencies, offices, commissions, officers, and employees harmless, without limitation, from and against any and all actions, claims, losses, liabilities, damages, costs, attorney fees, and expenses (including those required to establish the right to indemnification), arising out of or relating to: (a) any breach by Contractor (or any of Contractor's employees, agents, subcontractors, or by anyone else for whose acts any of them may be liable) of any of the promises, agreements, representations, warranties, or insurance requirements contained in this Contract; (b) any infringement, misappropriation, or other violation of any intellectual property right or other right of any third party; (c) any bodily injury, death, or damage to real or tangible personal property occurring wholly or in part due to action or inaction by Contractor (or any of Contractor's employees, agents, subcontractors, or by anyone else for whose acts any of them may be liable); and (d) any acts or omissions of Contractor (or any of Contractor's employees, agents, subcontractors, or by anyone else for whose acts any of them may be liable).

    The State will notify Contractor in writing if indemnification is sought; however, failure to do so will not relieve Contractor, except to the extent that Contractor is materially prejudiced. Contractor must, to the satisfaction of the State, demonstrate its financial ability to carry out these obligations.

    The State is entitled to: (i) regular updates on proceeding status; (ii) participate in the defense of the proceeding; (iii) employ its own counsel; and to (iv) retain control of the defense if the State deems necessary. Contractor will not, without the State's written consent (not to be unreasonably withheld), settle, compromise, or consent to the entry of any judgment in or otherwise seek to terminate any claim, action, or proceeding. To the extent that any State employee, official, or law may be involved or challenged, the State may, at its own expense, control the defense of that portion of the claim.

    Any litigation activity on behalf of the State, or any of its subdivisions under this Section, must be coordinated with the Department of Attorney General. An attorney designated to represent the State may not do so until approved by the Michigan Attorney General and appointed as a Special Assistant Attorney General.

27. **Infringement Remedies.** If, in either party's opinion, any piece of equipment, software, commodity, or service supplied by Contractor or its subcontractors, or its operation, use or reproduction, is likely to become the subject of a copyright, patent, trademark, or trade secret infringement claim, Contractor

must, at its expense: (a) procure for the State the right to continue using the equipment, software, commodity, or service, or if this option is not reasonably available to Contractor, (b) replace or modify the same so that it becomes non-infringing; or (c) accept its return by the State with appropriate credits to the State against Contractor's charges and reimburse the State for any losses or costs incurred as a consequence of the State ceasing its use and returning it.

28. **Limitation of Liability.** The State is not liable for consequential, incidental, indirect, or special damages, regardless of the nature of the action.

29. **Disclosure of Litigation, or Other Proceeding.** Contractor must notify the State within 14 calendar days of receiving notice of any litigation, investigation, arbitration, or other proceeding (collectively, "**Proceeding**") involving Contractor, a subcontractor, or an officer or director of Contractor or subcontractor, that arises during the term of the Contract, including: (a) a criminal Proceeding; (b) a parole or probation Proceeding; (c) a Proceeding under the Sarbanes-Oxley Act; (d) a civil Proceeding involving: (1) a claim that might reasonably be expected to adversely affect Contractor's viability or financial stability; or (2) a governmental or public entity's claim or written allegation of fraud; or (e) a Proceeding involving any license that Contractor is required to possess in order to perform under this Contract.

30. **State Data.** All data and information provided to Contractor by or on behalf of the State, and all data and information derived therefrom, is the exclusive property of the State ("**State Data**"); this definition is to be construed as broadly as possible. Upon request, Contractor must provide to the State, or a third party designated by the State, all State Data within 10 calendar days of the request and in the format requested by the State. Contractor will assume all costs incurred in compiling and supplying State Data. No State Data may be used for any marketing purposes.

31. **Reserved**

32. **Non-Disclosure of Confidential Information**. The parties acknowledge that each party may be exposed to or acquire communication or data of the other party that is confidential, privileged communication not intended to be disclosed to third parties. The provisions of this Section survive the termination of this Contract.

    a. Meaning of Confidential Information. For the purposes of this Contract, the term "**Confidential Information**" means all information and documentation of a party that: (a) has been marked "confidential" or with words of similar meaning, at the time of disclosure by such party; (b) if disclosed orally or not marked "confidential" or with words of similar meaning, was subsequently summarized in writing by the disclosing party and marked "confidential" or with words of similar meaning; and, (c) should reasonably be recognized as confidential information of the disclosing party. The term "Confidential Information" does not include any information or documentation that was: (a) subject to disclosure under the Michigan Freedom of Information Act (FOIA); (b) already in the possession of the receiving party without an obligation of confidentiality; (c) developed independently by the receiving party, as demonstrated by the receiving party, without violating the disclosing party's proprietary rights; (d) obtained from a source other than the disclosing party without an obligation of confidentiality; or, (e) publicly available when received, or thereafter became publicly available (other than through any unauthorized disclosure by, through, or on behalf of, the receiving party). For purposes of this Contract, in all cases and for all matters, State Data is deemed to be Confidential Information.

    b. Obligation of Confidentiality. The parties agree to hold all Confidential Information in strict confidence and not to copy, reproduce, sell, transfer, or otherwise dispose of, give or disclose such Confidential Information to third parties other than employees, agents, or subcontractors of a party who have a need to know in connection with this Contract or to use such Confidential Information for any purposes whatsoever other than the performance of this Contract. The parties agree to advise and require their respective employees, agents, and subcontractors of their obligations to keep all Confidential Information confidential. Disclosure to a subcontractor is permissible where: (a) use of a subcontractor is authorized under this

Contract; (b) the disclosure is necessary or otherwise naturally occurs in connection with work that is within the subcontractor's responsibilities; and (c) Contractor obligates the subcontractor in a written contract to maintain the State's Confidential Information in confidence. At the State's request, any employee of Contractor or any subcontractor may be required to execute a separate agreement to be bound by the provisions of this Section.

c. Cooperation to Prevent Disclosure of Confidential Information. Each party must use its best efforts to assist the other party in identifying and preventing any unauthorized use or disclosure of any Confidential Information. Without limiting the foregoing, each party must advise the other party immediately in the event either party learns or has reason to believe that any person who has had access to Confidential Information has violated or intends to violate the terms of this Contract and each party will cooperate with the other party in seeking injunctive or other equitable relief against any such person.

d. Remedies for Breach of Obligation of Confidentiality. Each party acknowledges that breach of its obligation of confidentiality may give rise to irreparable injury to the other party, which damage may be inadequately compensable in the form of monetary damages. Accordingly, a party may seek and obtain injunctive relief against the breach or threatened breach of the foregoing undertakings, in addition to any other legal remedies which may be available, to include, in the case of the State, at the sole election of the State, the immediate termination, without liability to the State, of this Contract or any Statement of Work corresponding to the breach or threatened breach.

e. Surrender of Confidential Information upon Termination. Upon termination of this Contract or a Statement of Work, in whole or in part, each party must, within 5 calendar days from the date of termination, return to the other party any and all Confidential Information received from the other party, or created or received by a party on behalf of the other party, which are in such party's possession, custody, or control; provided, however, that Contractor must return State Data to the State following the timeframe and procedure described further in this Contract. Should Contractor or the State determine that the return of any non-State Data Confidential Information is not feasible, such party must destroy the non-State Data Confidential Information and must certify the same in writing within 5 calendar days from the date of termination to the other party.

33. Reserved.

34. Reserved
35. Reserved

36. Records Maintenance, Inspection, Examination, and Audit. The State or its designee may audit Contractor to verify compliance with this Contract. Contractor must retain, and provide to the State or its designee and the auditor general upon request, all financial and accounting records related to the Contract through the term of the Contract and for 7 years after the latter of termination, expiration, or final payment under this Contract or any extension ("**Audit Period**"). If an audit, litigation, or other action involving the records is initiated before the end of the Audit Period, Contractor must retain the records until all issues are resolved.

Within 10 calendar days of providing notice, the State and its authorized representatives or designees have the right to enter and inspect Contractor's premises or any other places where Contract Activities are being performed, and examine, copy, and audit all records related to this Contract. Contractor must cooperate and provide reasonable assistance. If any financial errors are revealed, the amount in error must be reflected as a credit or debit on subsequent invoices until the amount is paid or refunded. Any remaining balance at the end of the Contract must be paid or refunded within 45 calendar days.

This Section applies to Contractor, any parent, affiliate, or subsidiary organization of Contractor, and any subcontractor that performs Contract Activities in connection with this Contract.

37. Warranties and Representations. Contractor represents and warrants: (a) Contractor is the owner or licensee of any Contract Activities that it licenses, sells, or develops and Contractor has the rights

necessary to convey title, ownership rights, or licensed use; (b) all Contract Activities are delivered free from any security interest, lien, or encumbrance and will continue in that respect; (c) the Contract Activities will not infringe the patent, trademark, copyright, trade secret, or other proprietary rights of any third party; (d) Contractor must assign or otherwise transfer to the State or its designee any manufacturer's warranty for the Contract Activities; (e) the Contract Activities are merchantable and fit for the specific purposes identified in the Contract; (f) the Contract signatory has the authority to enter into this Contract; (g) all information furnished by Contractor in connection with the Contract fairly and accurately represents Contractor's business, properties, finances, and operations as of the dates covered by the information, and Contractor will inform the State of any material adverse changes; and (h) all information furnished and representations made in connection with the award of this Contract is true, accurate, and complete, and contains no false statements or omits any fact that would make the information misleading. A breach of this Section is considered a material breach of this Contract, which entitles the State to terminate this Contract under Section 23, Termination for Cause.

38. **Conflicts and Ethics.** Contractor will uphold high ethical standards and is prohibited from: (a) holding or acquiring an interest that would conflict with this Contract; (b) doing anything that creates an appearance of impropriety with respect to the award or performance of the Contract; (c) attempting to influence or appearing to influence any State employee by the direct or indirect offer of anything of value; or (d) paying or agreeing to pay any person, other than employees and consultants working for Contractor, any consideration contingent upon the award of the Contract. Contractor must immediately notify the State of any violation or potential violation of these standards. This Section applies to Contractor, any parent, affiliate, or subsidiary organization of Contractor, and any subcontractor that performs Contract Activities in connection with this Contract.

39. **Compliance with Laws.** Contractor must comply with all federal, state and local laws, rules and regulations.

40. **Reserved**

41. **Nondiscrimination.** Under the Elliott-Larsen Civil Rights Act, 1976 PA 453, MCL 37.2101, *et seq*., and the Persons with Disabilities Civil Rights Act, 1976 PA 220, MCL 37.1101, *et seq*., Contractor and its subcontractors agree not to discriminate against an employee or applicant for employment with respect to hire, tenure, terms, conditions, or privileges of employment, or a matter directly or indirectly related to employment, because of race, color, religion, national origin, age, sex, height, weight, marital status, or mental or physical disability. Breach of this covenant is a material breach of this Contract.

42. **Unfair Labor Practice.** Under MCL 423.324, the State may void any Contract with a Contractor or subcontractor who appears on the Unfair Labor Practice register complied under MCL 423.322.

43. **Governing Law.** This Contract is governed, construed, and enforced in accordance with Michigan law, excluding choice-of-law principles, and all claims relating to or arising out of this Contract are governed by Michigan law, excluding choice-of-law principles. Any dispute arising from this Contract must be resolved in Michigan Court of Claims. Contractor consents to venue in Ingham County, and waives any objections, such as lack of personal jurisdiction or *forum non conveniens*. Contractor must appoint agents in Michigan to receive service of process.

44. **Non-Exclusivity.** Nothing contained in this Contract is intended nor will be construed as creating any requirements contract with Contractor. This Contract does not restrict the State or its agencies from acquiring similar, equal, or like Contract Activities from other sources.

45. **Force Majeure.** Neither party will be in breach of this Contract because of any failure arising from any disaster or acts of god that are beyond their control and without their fault or negligence. Each party will use commercially reasonable efforts to resume performance. Contractor will not be relieved of a breach or delay caused by its subcontractors. If immediate performance is necessary to ensure public health and safety, the State may immediately contract with a third party.

46. **Dispute Resolution.** The parties will endeavor to resolve any Contract dispute in accordance with this provision. The dispute will be referred to the parties' respective Contract Administrators or Program Managers. Such referral must include a description of the issues and all supporting documentation.

The parties must submit the dispute to a senior executive if unable to resolve the dispute within 15 business days. The parties will continue performing while a dispute is being resolved, unless the dispute precludes performance. A dispute involving payment does not preclude performance.

Litigation to resolve the dispute will not be instituted until after the dispute has been elevated to the parties' senior executive and either concludes that resolution is unlikely, or fails to respond within 15 business days. The parties are not prohibited from instituting formal proceedings: (a) to avoid the expiration of statute of limitations period; (b) to preserve a superior position with respect to creditors; or (c) where a party makes a determination that a temporary restraining order or other injunctive relief is the only adequate remedy. This Section does not limit the State's right to terminate the Contract.

47. **Media Releases.** News releases (including promotional literature and commercial advertisements) pertaining to the Contract or project to which it relates must not be made without prior written State approval, and then only in accordance with the explicit written instructions of the State.

48. **Website Incorporation.** The State is not bound by any content on Contractor's website unless expressly incorporated directly into this Contract.

49. **Order of Precedence.** In the event of a conflict between the terms and conditions of the Contract, the exhibits, a purchase order, or an amendment, the order of precedence is: (a) the purchase order; (b) the amendment; (c) Exhibit A; (d) any other exhibits; and (e) the Contract.

50. **Severability.** If any part of this Contract is held invalid or unenforceable, by any court of competent jurisdiction, that part will be deemed deleted from this Contract and the severed part will be replaced by agreed upon language that achieves the same or similar objectives. The remaining Contract will continue in full force and effect.

51. **Waiver.** Failure to enforce any provision of this Contract will not constitute a waiver.

52. **Survival.** The provisions of this Contract that impose continuing obligations, including warranties and representations, termination, transition, insurance coverage, indemnification, and confidentiality, will survive the expiration or termination of this Contract.

53. **Entire Contract and Modification.** This Contract is the entire agreement and replaces all previous agreements between the parties for the Contract Activities. This Contract may not be amended except by signed agreement between the parties (a "**Contract Change Notice**").

STATE OF MICHIGAN

Contract No. 071B4300154
Replaceable Underbody Plow Cutting Edges

EXHIBIT A
STATEMENT OF WORK
CONTRACT ACTIVITIES

Requirement
This optional use Contract is for the delivery of several cutting edges and blades as specified in Exhibit C -- SPECIFICATION FOR CUTTING EDGES WITH TUNGSTEN CARBIDE INSERTS FOR MOLDBOARD ASSEMBLIES
1. Work and Deliverable(s)
1.1 The Contractor must provide the following:
a) Cutting Edges, 4' Lengths for Underbody Blade Assemblies with Tungsten Carbide Inserts • Referenced Make/Model Kennametal #PB948 (1011891) or approved equivalent with specification sheet per Exhibit C, SPECIFICATION FOR CUTTING EDGES WITH TUNGSTEN CARBIDE INSERTS FOR MOLDBOARD ASSEMBLIES. • **EVOLUTION EDGES ECBTPSQA-2808** is an approved equivalent. **b)** Cutting Edges, 5' lengths for Underbody Blade Assemblies with Tungsten Carbide Inserts • Referenced Make/Model Kennametal #PB960 (1011892) or approved equivalent with specification sheet per Exhibit C, SPECIFICATION FOR CUTTING EDGES WITH TUNGSTEN CARBIDE INSERTS FOR MOLDBOARD ASSEMBLIES • **EVOLUTION EDGES ECBTPSQA-2809** is an approved equivalent. **c)** Cutting Edge blades are to be delivered to the various locations listed on the Purchase Order.
1.3 Warranties
The Contractor as the Manufacturer warrants that the equipment will be in good operating condition and free of manufacturing and or material defects during the **one (1) year** warranty period.
The Contractor warrants to the State that all its products will be free of material or manufacturing defects. If the product fails under normal conditions with regards to its intended use, it will be replaced free of charge. Normal conditions for plow blades are defined as them being used on a snow plow for winter snow removal only.
1.4 Recall Requirements and Procedures
When problems do occur with products, the Contractor will take the following steps: **a)** Investigate the issue that occurred and identify the cause **b)** Prioritize the replacement of the product/sin the production queue and ship them to the affected customer quickly to avoid any service delays **c)** Remedy the issue to ensure the same issue is avoided in future production runs of the effected product
1.5 Quality Assurance Program
The Contractor's Quality Assurance Program: Independent steel and carbide tests are conducted as new materials arrive to ensure they meet the required specifications prior to the manufacture of each product.
2. Service Levels
2.1 Time Frames
All quantities listed in the Purchase Order shall be delivered by November 15th, 2014.
• Time required to complete all deliveries from the day contractor starts deliveries (calendar days) is 60 days ARO
In subsequent years all deliverable(s) must be delivered after October 1st and before November 15th for the duration of the Contract, to various locations within the State. Lead time required from receipt of purchase order to meet these dates (calendar days) is 60 days ARO.
2.2 Meetings
The Contractor shall attend requested meetings with the State as State deems appropriate.

3. Staffing

3.1 Contractor Representative

The Contractor Representative is:

Mike Menner
Phone: (607) 733-5506
Cell: (607) 731-6013 (24 hours a day, 7 days per week for emergencies)
mmenner@chemungsupply.com

Mail: 2420 Coming Road
Elmira, NY 14903

This individual is specifically assigned to State of Michigan accounts. They will respond to State inquiries regarding the Contract Activities, answering questions related to ordering and delivery, etc.

The Contractor must notify the Contract Administrator at least **30** calendar days before removing or assigning a new Contractor Representative.

3.2 Customer Service Toll-Free Number

The Contractor's toll-free number for the State to make contact with the Contractor Representative is **1-800-733-5508**. The Contractor Representative must be available for calls during the hours of 7am to 4:30 pm EST.

3.3 Disclosure of Subcontractors

The Contractor will not be using subcontractors.

3.4 Place of Performance

The Contractor's facilities that will be involved in performing the Contract are:

- Chemung Supply, Inc., 98 Philo Road, West Elmira, NY 14903

3.5 Security

The Contractor must adhere to the State's security requirements at all delivery locations.

4. Pricing

4.1 Price Term

Pricing is firm for a 365 day period ("Pricing Period"). The first pricing period may be less in order to meet the time frame requirements per Exhibit A section 2.1 of the subsequent years. The first pricing period begins on the Effective Date. Adjustments may be requested, in writing, by either party and will take effect no earlier than the next Pricing Period.

4.2 Price Changes

a) The Contractor remains responsible for Contract Activities at the current price for all orders received before the mutual execution of a Change Notice indicating the start date of the new Pricing Period.

b) Adjustments will be based on changes in actual Contractor costs. Any request must be supported by written evidence documenting the change in costs. The State may consider sources, such as the Consumer Price Index; Producer Price Index; other pricing indices as needed; economic and industry data; manufacturer or supplier letters noting the increase in pricing; and any other data the State deems relevant

c) Following the presentation supporting documentation, both parties will have 30 days to review the information and prepare a written response. If the review reveals no need for modifications, pricing will remain unchanged unless mutually agreed to by the parties. If the review reveals that changes are needed, both parties will negotiate such changes, for no longer than 30 days, unless extended by mutual agreement.

5. Ordering

5.1 Authorizing Document

The appropriate authorizing document for the Contract will be a Purchase Order, which must be approved by the Contract Compliance Inspector, to order any Deliverable(s). The Bidder is not authorized to begin performance until receipt of a Purchase Order.

5.2 Order Verification

The Contractor must have internal controls to verify abnormal orders and to ensure that only authorized individuals place orders.

5.3 Quantities

Quantities specified, are committed estimates based on prior purchases. The State is not obligated to purchase in these or any other quantities. Orders for delivery will be issued directly to the Contractor by Purchase Order

6. Delivery

6.1 Delivery Programs

Delivery shall be to the location address listed on the purchase order.

The Contractor is to notify the Program Manager or their Designee with a 48 hour notice of delivery date.

Deliveries must be made between the hours of 8:00 a.m. to 2:00 p.m., Monday thru Friday.

The products will be shipped Prepaid/Allowed FOB Destination via Standard Truck Freight.

The transportation method shall be Standard Motor Freight.

6.2 Packaging and Palletizing

Delivery trucks shall be equipped with removable side rails.

Packaging and containers must meet the current requirements of state and federal law applicable to rail and motor carrier freight classifications, which will permit application of the lowest freight rate.

Packaging must be optimized to permit the lowest freight rate.

Shipments must be palletized. Manufacturer's standard 4-way shipping pallets must be used.

7 Acceptance

7.1 Acceptance, Inspection and Testing

The State will use the following criteria to determine acceptance of the Contract Activities:

A visual inspection per Michigan Test Method 719-95(Exhibit F) section 4.1 will be performed upon delivery. *The State reserves the right to* perform additional testing *for all or none of the shipments* per Michigan Test Method 719-95(Exhibit D).

a) The State's obligation to comply with any State Review Period (30 calendar days) is conditioned on the timely delivery of the Deliverable(s). The State Review Period will begin on the first Business Day following the State's receipt of the Deliverable(s).

b) The State may inspect the Deliverable to confirm that all components have been delivered without material deficiencies. If the State determines that the Deliverable or one of its components has material deficiencies, the State may reject the Deliverable without performing any further inspection or testing.

c) The State will only approve a Deliverable after confirming that it conforms to and performs according to its specifications without material deficiency. The State may, in its discretion, conditionally approve a Deliverable that contains material deficiencies if the State elects to permit the Contractor to correct those deficiencies post-approval. The Contractor remains responsible for working diligently to correct, within 30 Days at the Contractor's expense, all deficiencies in the Deliverable that remain outstanding at the time of State approval.

d) If, after three opportunities the Contractor is unable to correct all deficiencies, the State may: (i) demand that the Contractor cure the failure and give the Contractor additional time to do so at the sole expense of the Contractor; (ii) keep the Contract in force and perform, either itself or through other parties, whatever the Contractor has failed to do, and recover the difference between the cost to cure the deficiency and the Contract price plus an additional amount equal to 10% of the State's cost to cure the deficiency; or (iii) fully or partially terminate the Contract by giving notice to the Contractor. Notwithstanding the foregoing, the State cannot use, as a basis for exercising its termination rights under this Section, deficiencies discovered in a repeat State Review Period that could reasonably have been discovered during a prior State Review Period.

e) The State, at any time and in its reasonable discretion, may reject the Deliverable without notation of all deficiencies if the acceptance process reveals deficiencies in a sufficient quantity or of a sufficient severity that renders continuing the process unproductive or unworkable.

8. Invoice and Payment

8.1 Invoice Requirements

All invoices submitted to the State must include: (a) date; (b) purchase order/Contract Number; (c) quantity; (d) description of the Contract Activities; (e) unit price; (f) shipping cost (if any); and (g) total price.

8.2 Payment Methods

The State will make payment for approved/accepted Contract Activities by EFT.

9. Additional Requirements

9.1 Environmental and Energy Efficient Products

The Contractor must identify any energy efficient, bio-based, or otherwise environmental friendly products used in the products. Contractor must include any relevant third-party certification.

9.2 Recycled Content and Recyclability
Deliverable(s). Without compromising performance or quality, the State prefers Deliverable(s) containing higher percentages of recycled materials. The Contractor must indicate an estimate of the percentage of recycled materials, if any, contained in each Deliverable: • Total estimated percentage of recovered material = 90%
9.3 Hazardous Chemical Identification
In accordance with the federal Emergency Planning and Community Right-to-Know Act, 42 USC 11001, *et seq.*, as amended, the Contractor must provide a Material Safety Data Sheet listing any hazardous chemicals, as defined in 40 CFR §370.2, to be delivered. Each hazardous chemical must be properly identified, including any applicable identification number, such as a National Stock Number or Special Item Number. **The Contractor shall provide all current SDS to the Contract Compliance Inspector (CCI) 2 weeks prior to delivery.**
9.4 Mercury Content
Pursuant to MCL 18.1261d, mercury-free products must be procured when possible. Prior to shipment the Contractor must explain if it intends to provide products containing mercury, the amount or concentration of mercury, and whether cost competitive alternatives exist. If cost competitive alternatives do not exist, the Contractor must provide justification as to why the particular product is essential. All products containing mercury must be labeled as containing mercury.
9.5 Brominated Flame Retardants
The State prefers to purchase products that do not contain brominated flame retardants (BFRs) whenever possible. Prior to shipment the Contractor must disclose whether the products contain BFRs.
10. Liquidated Damages
Late or improper completion of the Contract Activities will cause loss and damage to the State and it would be impracticable and extremely difficult to fix the actual damage sustained by the State. Therefore, if there is late or improper completion of the Contract Activities the State is entitled to collect liquidated damages in the amount of $5,000 and an additional $100 per day for each day Contractor fails to remedy the late or improper completion of the Work.

STATE OF MICHIGAN

Contract No. 071B4300154
Replaceable Underbody Plow Cutting Edges

EXHIBIT B
PRICING

a) The Pricing schedule for the Contract Activities for Replaceable Underbody Cutting edges is listed below.

b) Prices include all costs, including but not limited to, any one-time or set-up charges, fees, and potential costs that Contractor may charge the State (e.g. shipping and handling, per piece pricing, and palletizing).

c) The Contractor will be required to furnish all Contract Activities that may be ordered during the Contract period.

d) The Contractor will offer a quick payment discount of ½ % off an invoice if paid within 15 Days from the State's receipt of the invoice or delivery of the Deliverable(s), whichever is later.

e) The Contractor certifies that the prices were arrived at independently, and without consultation, communication, or agreement with any other Contractor.

Item No.	Unit	Description	Unit Price
1	EA.	CUTTING EDGES, 4' LENGTHS FOR UNDERBODY BLADE ASSEMBLIES WITH TUNGSTEN CARBIDE INSERTS	$ 183.22
2	EA.	CUTTING EDGES, 5' LENGTHS FOR UNDERBODY BLADE ASSEMBLIES WITH TUNGSTEN CARBIDE INSERTS	$ 229.27

Exhibit C

MICHIGAN DEPARTMENT OF TRANSPORTATION
BUREAU OF HIGHWAYS
MAINTENANCE DIVISION

SPECIFICATION FOR CUTTING EDGES WITH TUNGSTEN CARBIDE INSERTS FOR MOLDBOARD ASSEMBLIES

DESCRIPTION: This specification covers requirements for replaceable cutting edges with tungsten carbide inserts to be used on motor graders and underbody truck scrapers.

BLADE: The blade shall be flat hot-rolled finished steel, SAE 1020. All bolt holes shall be located, dimensioned, and countersunk as shown on the attached drawing. Punching shall conform to American Association of State Highway and Transportation Officials (AASHTO) standard bolt hole spacing for even and half foot length, punched 11/16" square holes for 5/8" bolts. Blade thickness to be 7/8".

Length of blade shall be as noted in the bid proposal + or - 1/8" specified in order to fit total moldboard in various combinations. The ends shall be square and cleanly cut.

MARKING: Each blade shall be legibly stamped with the manufacturer identification and year of manufacture. Complete blades are to be rust resistant painted or lacquered except for insert and brazing which shall be protected from paint by means of masking tape or other method. Color shall be yellow for identification.

INSERTS: Inserts shall be cemented tungsten carbide of rectangular design, and shall be dimensioned and located in the blade as shown on the attached drawing. Inserts shall be positioned in the blade groove so that the bottom of the insert is flush with the bottom of the blade within +/- 1/16 inch. Physical properties of the inserts shall be as follows.

Physical Properties	Value	ASTM Method
Rockwell Hardness, A Scale, (Range)	87.5 - 89.0	B 294
Transverse Rupture Strength, psi, min.	350,000	B 406
Density, g./cu.cm	14.1 - 14.6	B 311
Cobolt Content, percent by weight	12.0 +/_ 1.0	_
Porosity: max allowable apparent	A06	3276 - 79
Porosity	B00	
	C00	

APPROVED TUNGSTEN CARBIDE: Kennametal 3030 or demonstrated equal. Carbide insert manufacturers showing advertised physical properties tabulation for grade carbide proposed shall be submitted with each bid without exception. The tungsten carbide insert shall be made of virgin material.

BRAZING: The tungsten carbide inserts shall be securely brazed over the entire length and surface of the blade groove consistent with sound brazing practice with no evidence of voids or use of shims. The tungsten carbide inserts shall be positioned in the milled groove at .010" between the inserts and entire length of each cutting edge section. Brazing gaps, excessive voids or oxidized surfaces not holding brazing material shall be cause for rejection.

The brazing material shall be a high strength alloy type. The rated shear strength of the braze material shall be 30,000 P.S.I. (minimum). A "Type D" certification from the manufacturer of the braze material is required to be submitted to the Program Manager or their designee.

BOLTS, NUTS AND WASHERS: Bolts, nuts, and washers are not to be furnished unless specifically requested by the State.

SPECIFIC REQUIREMENTS: Cutting edges shall be of the length specified in the request for quotations. The furnished cutting edge shall be free of warping and other defects and longitudinal deviation from a straight line shall not exceed 1/8 inch per 4 feet of length. The difference between the highest and lowest tip point not exceed 1/32 inch on any given blade assembly.

The contractor shall furnish the Program Manager with a certified test result of Rockwell Hardness, Transverse Rupture Strength, Density, Cobalt Content and Porosity (ASTM Designations as above) for each cemented carbide lot or batch, used in fabricating the cutting edges. Reclaimed hard scrap tungsten carbide is not acceptable. Each test sample shall meet the specified physical requirements.

The contractor shall also provide written certification that states the blades shipped meet all the requirements contained in the specification to the Program Manager or designee upon delivery.

A loss of 6" or more of tungsten carbide inserts per cutting edge during normal usage shall be considered brazing failure.
TESTING: prior to issuing a purchase order the contractor shall be required to furnish each type of blade bid for examination and testing within ten (10) business days of

notification. Two blades per shipment (a shipment shall be considered any delivery that takes place within a three (3) week period or four (4) blades per yearly purchase order, whichever is greater, shall be sampled and tested by the MDOT Materials and Technology Division or an authorized/independent third party testing provider before final acceptance and payment is made.

INSPECTION: All cutting edges will be inspected by the State for compliance with the specifications. The inspection may be performed at the place of manufacture and, if the State elects, may be undertaken subsequent to delivery. When performed at the place of manufacture, the Inspector representing the State shall have free entry to all parts of the manufacturer's plant which concern the production of the cutting edges ordered. If the cutting edges fail to meet the requirement of the specifications, they will be rejected and the material returned to the contractor without any charges to the State.

WARRANTY: Materials and assembly shall be guaranteed with replacement against breakage and brazing failure, as well as satisfactory performance under normal cold weather snow and ice removal operations.

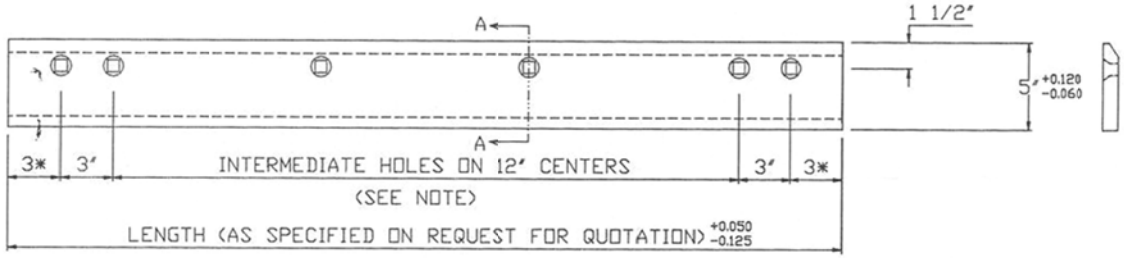

Note:
Measured longitudinally on the blade, each bolt hole shall be located as dimensioned within ± 0.0625 inches using the center of one end hole as a datum point. Center of holes must be in line within ± 0.032 inches of established centerline.

* The hole used as a datum point shall be located at a distance from the blade end of 3 +0.0300 -0.0625

All dimensions are in inches.

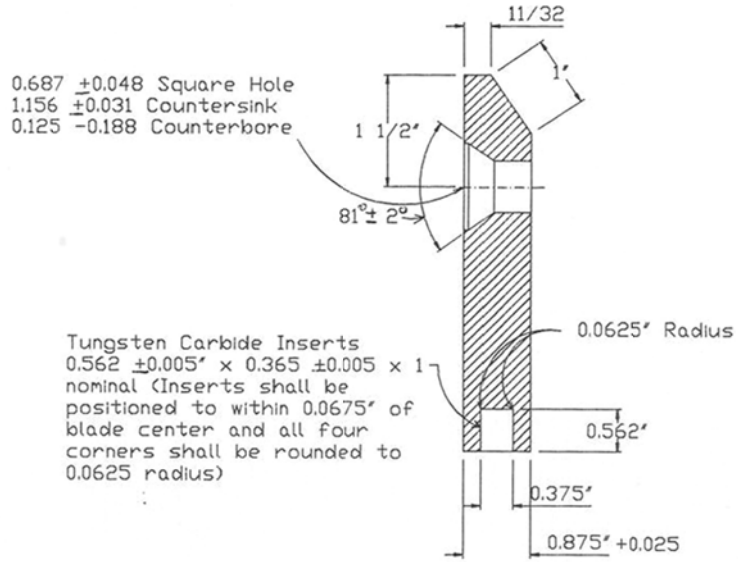

SECTION A-A

CUTTING EDGES WITH TUNGSTEN CARBIDE INSERTS FOR MOLDBOARD ASSEMBLIES

Exhibit C

Exhibit D

TEST METHOD FOR
TUNGSTEN CARBIDE INSERTS
IN UNDERBODY BLADES

Michigan Test Method 719-95

1. SCOPE

1.1 Testing of the brazed connection between the tungsten carbide inserts and the underbody blades will determine if the underbody blades meet the current MDOT specifications.

2. TESTING EQUIPMENT

2.1 Electro-hydraulic test machine.

2.1.1 Fixture for shear testing of the brazed connection.

2.1.2 Microscope (20X minimum).

3. SELECTION AND QUANTITY OF SAMPLES TO BE TESTED

3.1 Two blades per shipment (a shipment shall be considered any delivery that takes place within a three [3] week period) or four (4) blades per yearly order, whichever is greater; shall be sampled and tested by the MDOT Materials and Technology Division or an authorized/independent third party testing provider before final acceptance and payment is made.

3.2 From each blade four sample specimens shall be taken. Two samples shall be taken from each third point of the blade for four specimens.

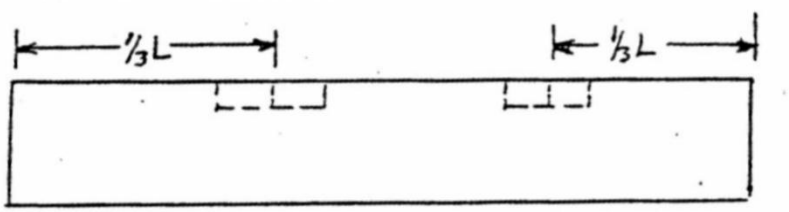

NOTE: This method prepared by Structural Research Unit, Research and Technology Section. Approved August 5, 1991. Revised and re-approved May 21, 1992, 1994 and April, 1995.

4. BRAZING REQUIREMENTS

4.1 The MDOT specification for cutting edges with tungsten carbide inserts for moldboard assemblies requires that the inserts be securely brazed over the entire length and surface of the blade groove. Workmanship shall be consistent with sound brazing practice with no evidence of voids or use of shims. A visual inspection will be performed to determine if there are any voids present. Any observed voids in the brazing shall be noted on the test report. Brazing gaps, excessive voids, or oxidated surface not holding brazing material shall be cause for rejection of the shipment.

4.2 The brazing material shall be a high strength alloy type with a minimum rated shear strength of 207,000 kPa (30,000 psi). A "Type D" certification from the manufacturer of the brazing material is required to be submitted with the invoices to the Central Office. This certification will be forwarded to the Aggregate and Metals Laboratory.

5. PREPARATION OF THE TEST SPECIMEN

5.1 Each underbody blade to be tested shall be sawed so that an individual insert and the blade base materials surrounding that insert are removed from the overall blade. The test specimen shall be machined to 19 mm to 22 mm (3/4 inch to 7/8 inch) thickness x 19 mm (3/4 inch) and 25 mm (1 inch) long.

6. PROCEDURE

6.1 The test load shall be applied to the insert along the longitudinal axis at a rate not to exceed 470 N●m/sec (350 1bft/sec). The peak load value is observed and recorded (failure of the insert does not change the peak loading value observed).

6.2 The peak load is divided by the actual surface area of the insert to blade interface (approximately 0.000968 square meters [1.5 square inches]) to obtain the shear loading value in Newtons per square meter (pounds per square inch).

6.3 The inserts may shatter during shear testing, causing a lower kPa (psi) value. If the primary mode of specimen failure is shattering of the insert <u>and</u> the shear strength value is less than 138,000 kPa (20,000 psi) the tester may elect to either test additional samples or exclude the specimen from the average test value for that blade. A minimum of three (3) shear test values per blade must be used to calculate a valid average.

6.4 The shear loadings values from the test specimens from each blade shall be averaged to obtain a final test value for each blade.

7. ACCEPTANCE OR REJECTION OF THE SHIPMENT

7.1 In addition to the brazing workmanship specified in Section 4.1 the shear strength of the brazed connection is evaluated to determine if the shipment is to be accepted or rejected.

If the averaged shear strength of each blade tested meets or exceeds the 138,000 kPa (20,000 psi) minimum requirement the entire shipment shall be considered accepted and payment made.

7.2 If for any reason the averaged shear strength of any originally sampled blade falls below a minimum of 138,000 kPa (20,000 psi) one of two things shall occur:

7.2.1 If one originally sampled blade fails to meet the 138,000 kPa (20,000 psi) requirement, a second blade from the same shipment delivery point shall be tested. Failure of this second test blade constitutes a cause for rejection of the entire shipment.

7.2.2 If two or more originally sampled blades fail to meet the 138,000 kPa (20,000 psi) minimum shear strength requirement this shall constitute a cause for rejection of the entire shipment being tested.