Welding – Quality Concerns & In-Service Welding

October 7th, 2015

Consumers Energy
Count on Us

Consumers Energy

- Jackson, MI
- Founded in 1886 (Jackson Electric Light Works)
- 6.8 million customers
- 1.7 million Natural Gas customers
- Approx. 8,000 employees

C.E. Natural Gas Service Territory

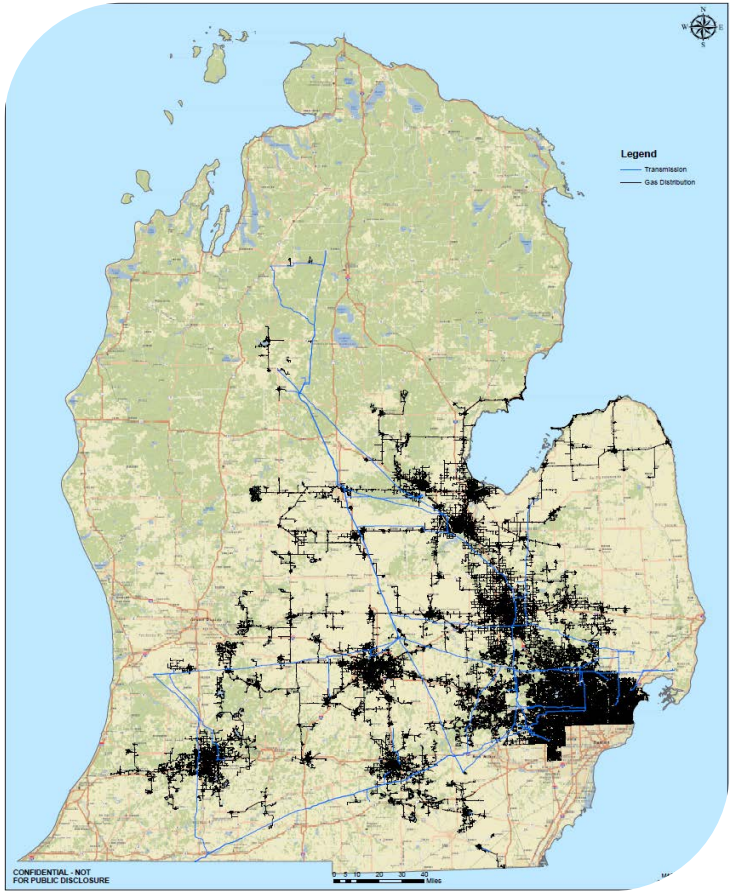

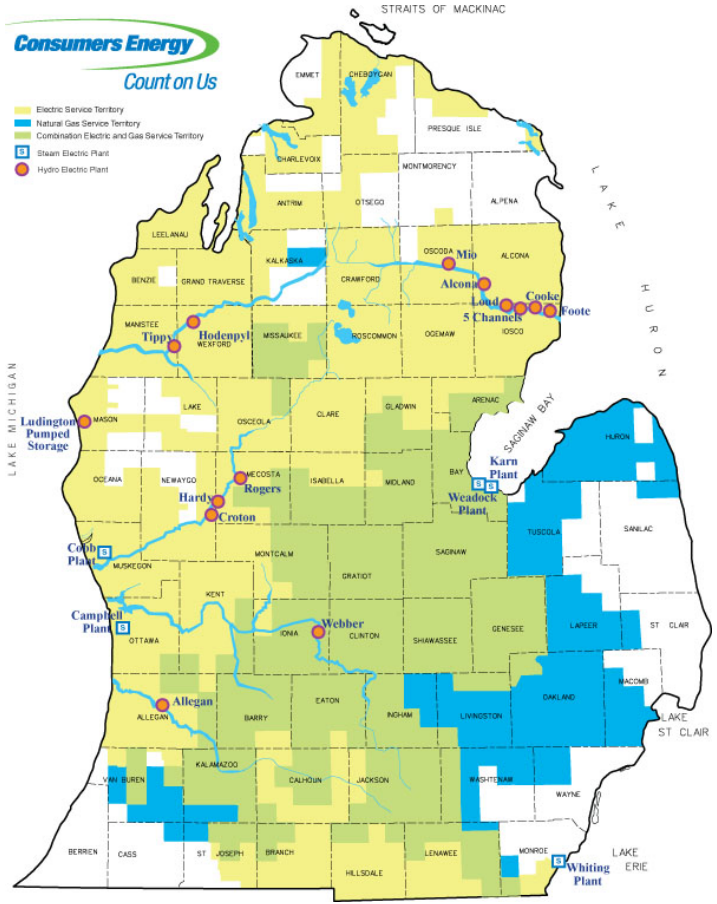

Delivering Gas service to 45 of 68 lower peninsula counties.

Consumers Energy
Count on Us

Consumers Energy's Natural Gas System

- 1.7 Million Customers
- Nearly 27,000 Miles of Distribution Main
- 2,467 Miles of Transmission Pipeline
- 7 Compressor Stations
- 15 Storage Fields

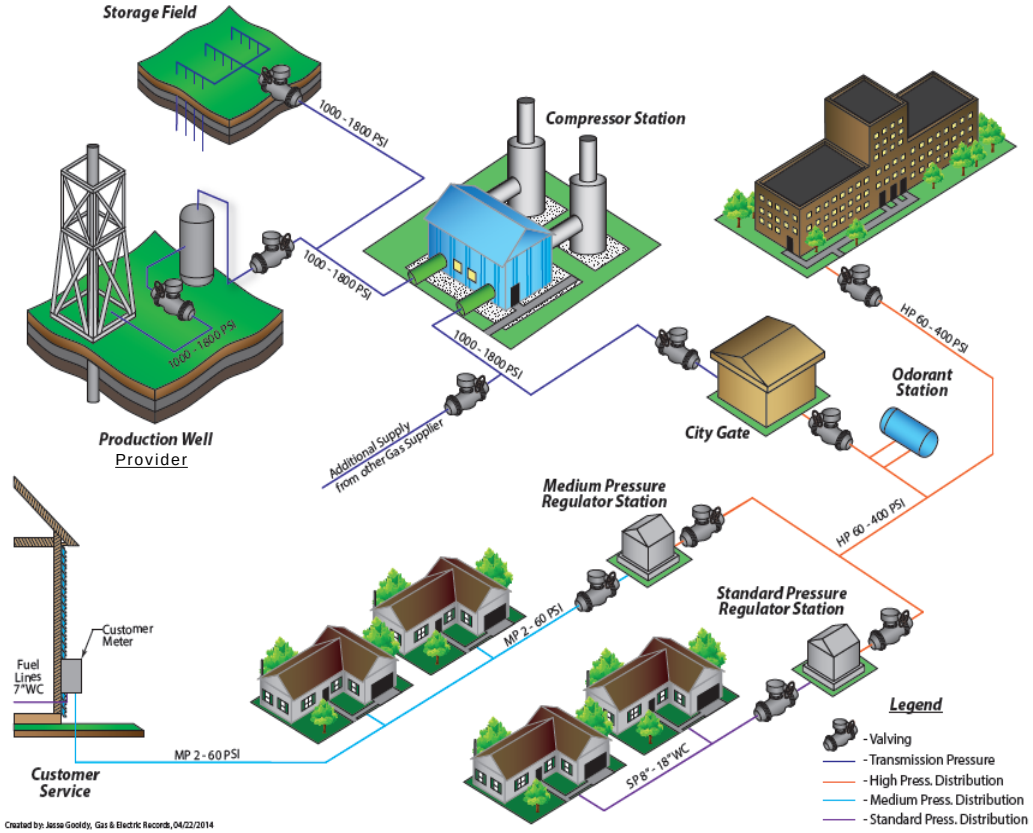

Federal & State Regulation

Federal Regulation:

- Department Of Transportation (DOT)
- Pipeline and Hazardous Materials Safety Administration (PHMSA)
- Code of Federal Regulations

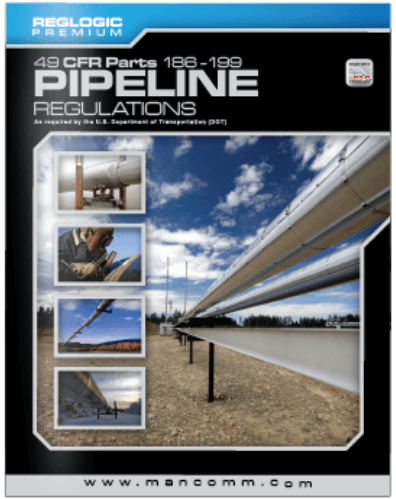

State Regulation:

- Michigan Department Of Transportation (MDOT)
- Michigan Public Service Commission (MPSC)
- Michigan Gas Safety Standard

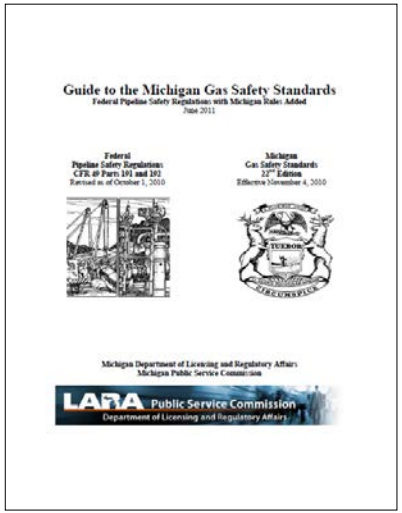

Consumers Energy
Count on Us

Federal & State Regulation - Welding

Subpart E–Welding of Steel in Pipelines

§192.221 Scope.

(a) This subpart prescribes minimum requirements for welding steel materials in pipelines.
(b) This subpart does not apply to welding that occurs during the manufacture of steel pipe or steel pipeline components.
[Part 192 - Org., Aug. 19, 1970]

§192.225 Welding procedures.

§192.227 Qualification of welders.

Welding Procedures

§192.225 Welding procedures.

(a) Welding must be performed by a qualified welder in accordance with welding procedures qualified under section 5 of API 1104 (ibr, *see* §192.7) or section IX of the ASME Boiler and Pressure Vessel Code " Welding and Brazing Qualifications" (ibr, *see* §192.7) to produce welds meeting the requirements of this subpart. The quality of the test welds used to qualify welding procedures shall be determined by destructive testing in accordance with the applicable welding standard(s).

(b) Each welding procedure must be recorded in detail, including the results of the qualifying tests. This record must be retained and followed whenever the procedure is used.

- **API 1104 - Welding of Pipelines and Related Facilities**
- **ASME BPVC Sec. IX – Qualification Standard For Welding And Brazing Procedures, Welders, Brazers, And Welding And Brazing Operators**

Welding Procedures

Michigan Added Rules

R 460.20304 Welding procedures.

In addition to the requirements contained in 49 C.F.R. §192.225, which is adopted by reference in R 460.20606, an operator shall ensure that a welding procedure meets all of the following requirements:

(a) Is qualified under either section IX of the ASME boiler and pressure vessel code, which is adopted by reference in R 460.20604, or section 5 of API standard 1104, which is adopted by reference in R 460.20603, whichever is appropriate to the function of the weld.

(b) Is qualified under appendix B of API standard 1104, which is adopted by reference in R 460.20603, for pipelines operating at greater than 60 psig.

(c) A copy of the welding procedure being followed is on the jobsite when welding is performed.

Item (b) was added in 2009 – API 1104 Appendix B

Welding Procedures

Construction (API 1104 main body)

- No product in system

In-Service (API 1104 appendix B)

- Product in system (flow/pressure)

Welding Construction Issues

PHMSA
Issues Advisory Bulletins to Owners/Operators

PHMSA
U.S. Department of Transportation
Pipeline and Hazardous Materials Safety Administration

Careers | Contact Us | FAQs | Site Map

Enter Search Term(s): Search

For the Public | Hazmat Safety Community | Pipeline Safety Community | Briefing Room | Doing Business with PHMSA | Calendar

Home » Pipeline Safety Community » Regulations » Advisory Bulletins

Home

About PHMSA
- Mission and Goals
- About the Agency
- Key Officials
- Organization
- Calendar

Promoting Safety & Security
- Regulations
- Special Permits & Approvals
- International Standards
- Security
- Initiatives

Encouraging Compliance
- Training Resources
- Outreach
- Inspections & Enforcement
- Drug & Alcohol Testing

Advisory Bulletins

PHMSA uses advisory bulletins to inform affected pipeline operators and Federal and state pipeline safety personnel of matters that have the potential of becoming safety or environmental risks.

ADB-2015-02	[Docket No. PHMSA-2015-0140] Pipeline Safety: Potential for Damage to Pipeline Facilities Caused by the Passage of Hurricanes; ACTION: Notice; Issuance of Advisory Bulletin.	Jun 23, 2015
ADB-2015-01	Potential for Damage to Pipeline Facilities Caused by Flooding, River Scour, and River Channel Migration, Notice: Issuance of Advisory Bulletin	Apr 9, 2015
ADB-2014-05	Docket No.: PHMSA 2014-0086 Reminder to perform evaluations of their Integrity Management (IM) programs. Notice: Issuance of Advisory Bulletin	Oct 15, 2014
ADB-2014-04	Docket Number: PHMSA-2014-0400 Potential significant impacts of flow reversals, product changes and conversions. Notice: Issuance of advisory bulletin	Sep 18, 2014
ADB-2014-03	Docket No. PHMSA-2014-0017 Pipeline Safety: Construction Notification Action: Notice: Issuance of Advisory Bulletin	Sep 12, 2014
ADB-2014-02	Docket Number: PHMSA-2014-0020 Pipeline Safety: Lessons Learned From the Release at Marshall, Michigan ACTION: Notice; issuance of advisory bulletin.	May 6, 2014
ADB-2014-01	[Docket No. PHMSA-2013-0226] Improvements in Preparing Oil Spill Facility Response Plans ACTION: Notice; Issuance of Advisory Bulletin	Jan 28, 2014
ADB-2013-03: Correction	[Docket No. PHMSA-2013-0097] 78 FR 65427 Pipeline Safety: Reminder of Requirements for Liquefied Petroleum Gas and Utility Liquefied Petroleum Gas Pipeline Systems	Oct 31, 2013

http://phmsa.dot.gov/pipeline/regs/advisory-bulletin

Welding Construction Issues

ADB-10-03

Federal Register / Vol. 75, No. 56 / Wednesday, March 24, 2010 / Notices 14243

business days between the hours of 10 a.m. and 3 p.m. Copies of such filing also will be available for inspection and copying at the principal office of NYSE Arca. All comments received will be posted without change; the Commission does not edit personal identifying information from submissions. You should submit only information that you wish to make available publicly. All submissions should refer to File No. SR–NYSEArca–2010–14 and should be submitted on or before April 8, 2010.

For the Commission, by the Division of Trading and Markets, pursuant to delegated authority.[19]

Florence E. Harmon,

Deputy Secretary.

[FR Doc. 2010–6507 Filed 3–23–10; 8:45 am]

BILLING CODE 8011–01–P

DEPARTMENT OF TRANSPORTATION

annual revenue will not exceed $5 million.

If the verified notice contains false or misleading information, the exemption is void *ab initio*. Petitions to revoke the exemption under 49 U.S.C. 10502(d) may be filed at any time. The filing of a petition to revoke will not automatically stay the effectiveness of the exemption. Petitions for stay must be filed no later than March 31, 2010 (at least 7 days before the exemption becomes effective).

An original and 10 copies of all pleadings, referring to STB Finance Docket No. 35359, must be filed with the Surface Transportation Board, 395 E Street, SW., Washington, DC 20423–0001. In addition, a copy of each pleading must be served on Thomas F. McFarland, 208 South LaSalle Street, Suite 1890, Chicago, IL 60604.

Board decisions and notices are

Members of the public may present a written statement to the Committee at any time.

Dated: Issued in Washington, DC on March 17, 2010.

Barry Scott,

Director, Research & Technology Development.

[FR Doc. 2010–6254 Filed 3–23–10; 8:45 am]

BILLING CODE 4910–13–M

DEPARTMENT OF TRANSPORTATION

Pipeline and Hazardous Materials Safety Administration

[Docket No. PHMSA–2010–0078]

Pipeline Safety: Girth Weld Quality Issues Due to Improper Transitioning, Misalignment, and Welding Practices of Large Diameter Line Pipe

- Line pipe weld misalignment,
- Improper bevel and wall thickness transitions,
- Out of roundness due to cut induction bends, and
- **Other improper welding practices**.

Welding Construction Issues

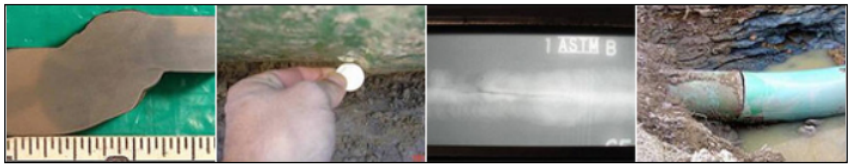

PHMSA inspection has seen the following types of concerns when inspecting new pipeline construction:

Mechanized Welding

- Coating damage caused by welding band
- Incomplete weld procedure qualification
- Pre-heat crew not using Tempilstiks
- Pipe size - Hi-Lo alignment issues
- NDT falling behind main gang
- Lack of padding between pipe and skids
- Incorrect or inadequate placement of skid cribbing
- Lack of inspector oversight
- Not following procedures
- Incorrect pre-heat or interpass temp
- Improper use of Tempilstik - too near weld
- Amps and Volts measured at machine not weld (only long leads)
- Moving pipe during root bead welding
- Initial high defect rates
- Inadequate defect repair tracking
- Inadequate quality and documentation of MUT

Manual Welding

- Not following procedures
- Improper fitup (misalignment)
- Improper bevel and wall thickness transitions
- Improper fitup of cut induction bends (ovality and out-of-roundness)
- Lack of inspector oversight
- Early clamp release
- Arc burns due to poor welding practices
- Incorrect pre-heat or interpass temp
- Inadequate visual weld inspection
- Improper storage of low hydrogen rods
- Welding inspectors not in possession of welding procedures
- Use of 'hinging' technique to aid with pipe line-up
- Pipe size - Hi-Lo alignment issues
- Improper gas flow rate for gas shielded processes
- Inadequate defect repair tracking
- Incomplete qualification documents for welders
- Amps and Volts measured at machine not weld (for long leads)
- Inadequate defect removal on repair welds

Improper Welding Practices:

- Bevel and Wall Thickness transitions
- Early clamp release
- Arc burns
- Incorrect preheat and inter-pass temp control
- Improper electrode storage
- Use of “hinging” to aid in pipe line-up
- Poor inspector oversight
- Inadequate documentation – welder/procedure

Always follow Welding Procedure and Job Specs

Welding Construction Issues

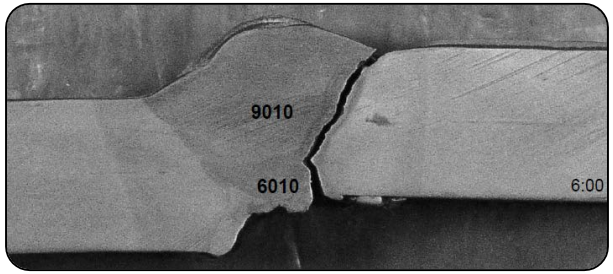

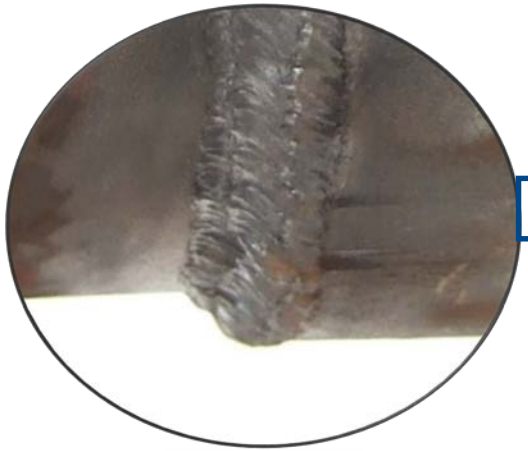

Welding Misalignment:

- Equal WT – 1/8 inch equally distributed
- Unequal WT – 3/32 inch
- Unequal WT – Transition Bevels

Welding Construction Issues

Unequal Wall Thickness Transitions

Fig. I-5 Acceptable Design for Unequal Wall Thickness

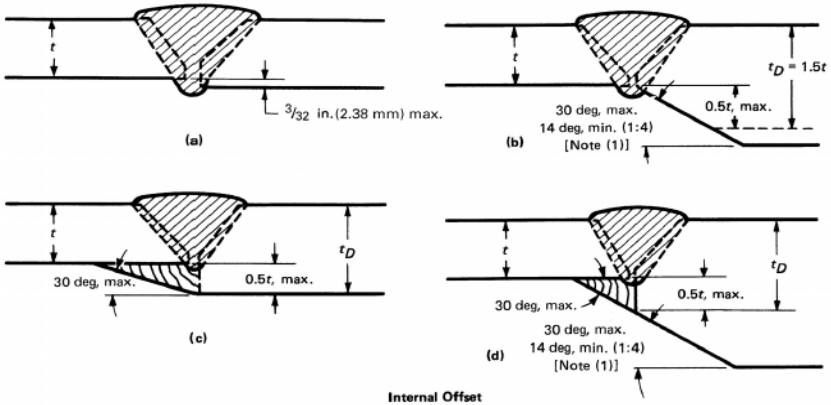

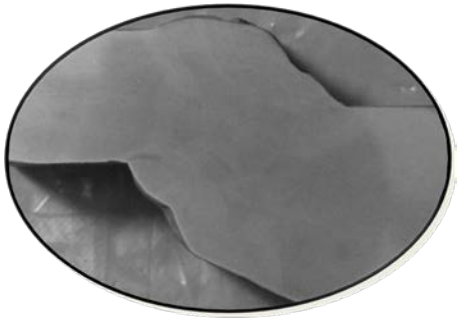

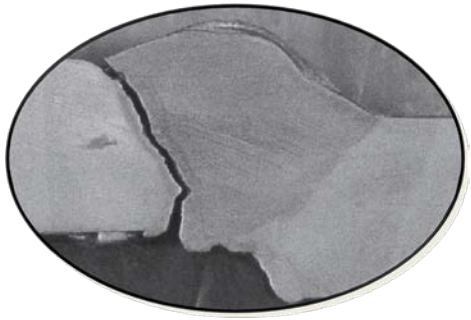

Preheat and Inter-pass Temp Control

R 460.20307 Welding preheating.

Rule 307. In addition to the requirements contained in 49 C.F.R. §192.235, which is adopted by reference in R 460.20606, if preheating is required, then an operator shall monitor the preheat temperature to ensure that the required preheat temperature is reached before beginning, and is maintained during, the welding operation.

Preheat and Inter-pass Temp Control

Key Concepts in Welding Engineering

by R. Scott Funderburk

Fundamentals of Preheat

Preheating involves heating the base metal, either in its entirety or just the region surrounding the joint, to a specific desired temperature, called the *preheat temperature*, prior to welding. Heating may be continued during the welding process, but frequently the heat from welding is sufficient to maintain the desired temperature without a continuation of the external heat source. The *interpass temperature*, defined as the base metal temperature at the time when welding is to be performed between the first and last welding passes, cannot be permitted to fall below the preheat temperature. Interpass temperature will not be discussed further here; however, it will be the subject of a future column. Preheating can produce many beneficial effects; however, without a working knowledge of the fundamentals involved, one risks wasting money, or even worse, degrading the integrity of the weldment.

Why Preheat?

There are four primary reasons to utilize preheat: (1) it slows the cooling rate in the weld metal and base metal, producing a more ductile metallurgical structure with greater resistance to cracking; (2) the slower cooling rate provides an opportunity for hydrogen that may be present to diffuse out harmlessly, reducing the potential for cracking; (3) it reduces the shrinkage stresses in the weld and adjacent base metal, which is especially important in highly restrained joints; and (4) it raises some steels above the temperature at which brittle fracture would occur in fabrication. Additionally, preheat can be used to help ensure specific mechanical properties, such as weld metal notch toughness.

When Should Preheat Be Used?

In determining whether or not to preheat, the following should be considered: code requirements, section thickness, base metal chemistry, restraint, ambient temperature, filler metal hydrogen content and previous cracking problems. If a welding code must be followed, then the code generally will specify the minimum preheat temperature for a given base metal, welding process and section thickness. This minimum value must be attained regardless of the restraint or variation in base metal chemistry; however, the minimum value may be increased if necessary.

When there are no codes governing the welding, one must determine whether preheat is required, and if so, what preheat temperature will be appropriate. In general, preheat usually is not required on low carbon steels less than 1 in (25 mm) thick. However, as the chemistry, diffusible hydrogen level of the weld metal, restraint or section thickness increases, the need for preheat also increases.

What Preheat Temperature Is Required?

Welding codes generally specify minimum values for the preheat temperature, which may or may not be adequate to prohibit cracking in every application. For example, if a beam-to-column connection made of ASTM A572-Gr50 jumbo sections (thicknesses ranging from 4 to 5 in [100-125 mm]) is to be fabricated with a low-hydrogen electrode, then a minimum prequalified preheat of 225°F (107°C) is required (AWS D1.1-96, Table 3.2). However, for making butt splices in jumbo sections, it is advisable to increase the preheat temperature beyond the minimum prequalified level to that required by AISC for making butt splices in jumbo sections, namely 350°F (175°C) (AISC LRFD J2.8). This conservative recommendation acknowledges that the minimum preheat requirements prescribed by AWS

Welding Innovation Vol. XIV, No. 2, 1997

Preheat: Temperature of the entire weld zone immediately before the arc is initiated for any/all weld passes.

- Slows cooling rate in the weld metal and base metal producing a more ductile microstructure.
- Slower cooling rate provides opportunity for hydrogen to diffuse.
- Reduces shrinkage stresses in the weld and adjacent base metal.

Author: R. Scott Funderburk, Lincoln Electric

Consumers Energy
Count on Us

Construction Preheat Conditions

Material Issues

- High strength materials
- Heavy wall thicknesses (≥ .500)
- Highly restrained joints

Type of Electrode

- Cellulosic
- Others containing more than optimum levels:
  - H8
  - H16

Weather Conditions

- Cold Temps
- Blowing Wind
- Rain, Snow, Moisture

Always follow Welding Procedure Specification (WPS)

*Responsibility of both the Inspector and Welder

In-Service Welding

API 1104 20th Edition Appendix B

In-Service Welding:
Pipelines and piping systems which contain petroleum, petroleum products, or fuel gases that may be pressurized and/or flowing. Weld is deposited while system is in service.

Two main concerns:

- Avoid burning through where the welding arc causes the pipe wall to be breached. - Welder Safety.
- Avoid hydrogen cracking potential. Welds made in-service cool at an accelerated rate. - System Integrity.

Currently Appendix B is not federally mandated in 49 CFR 192. Michigan rules apply to systems operating at greater than 60 psi.

In-Service Welding

Hydrogen Cracking:

HIC – Hydrogen Induced Cracking

HAC – Hydrogen Assisted Cracking

- Cold cracking
- Delayed cracking
- Under-bead cracking

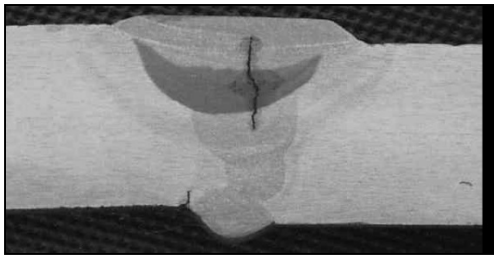

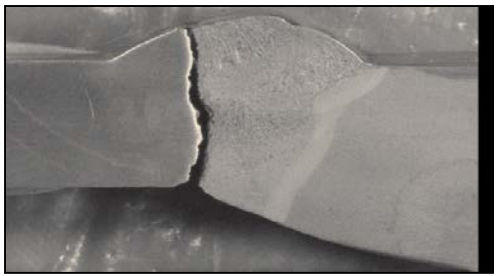

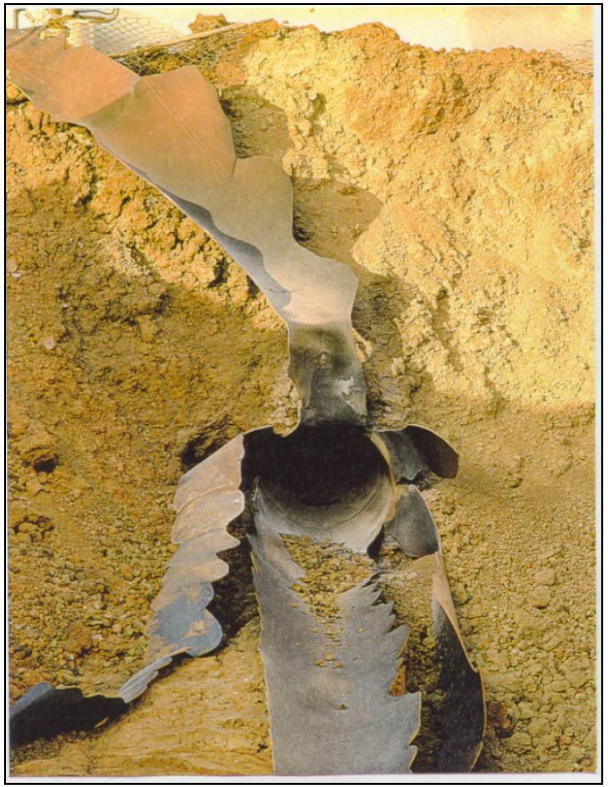

In-Service Welding

How does hydrogen cracking occur?

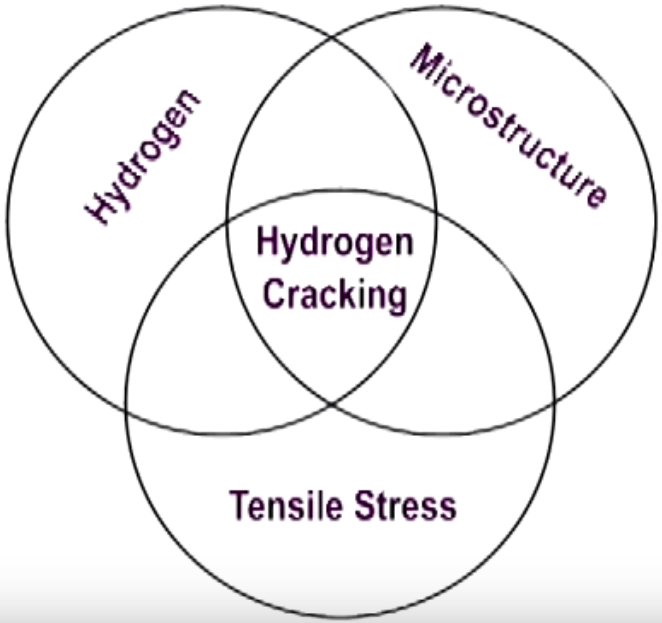

Three things must be satisfied simultaneously:

- Hydrogen in the weld
  - Electrode
  - environmental
- Susceptible microstructure
  - Fast cooling rate
  - Material type
- Stress acting on the weld
  - Applied stress
  - Inherent stress

DNV & BMT instructional video: https://www.youtube.com/watch?v=Wjz8eh3uxkU

In-Service Welding

Practical welding processes for short cycle field applications:

SMAW

EXX10: 40-60mL/100gm

EXX18,EXX15,EXX16

- H4 <4mL/100gm
- H8 <8mL/100gm
- H16 <16mL/100gm

GMAW

ER70S-6:
ER80S-D2:
ER80S-G:
} <4mL/100gm

FCAW

E70T-X
E71T-X
E81T-X
} 5-20mL/100gm

Recommended hydrogen content of electrode: <4ml/100gm

API 1104 20th Edition

Appendix B In-Service Welding Essential Variable differences

- Carbon Equivalent (CE) and material grade are NOT essential variables
- Wall Thickness is NOT an essential variable
- Thermal Cooling Capacity IS an essential variable
  - ✓ operating conditions, cooling rates
- Weld Deposition Sequence IS an essential variable

In-Service Welding

Procedure Qualification Essential Variables:

- Pipeline Operating Conditions
  - (weld cooling rates)
- Weld Deposition Sequence

Use of water qualifies for most severe conditions

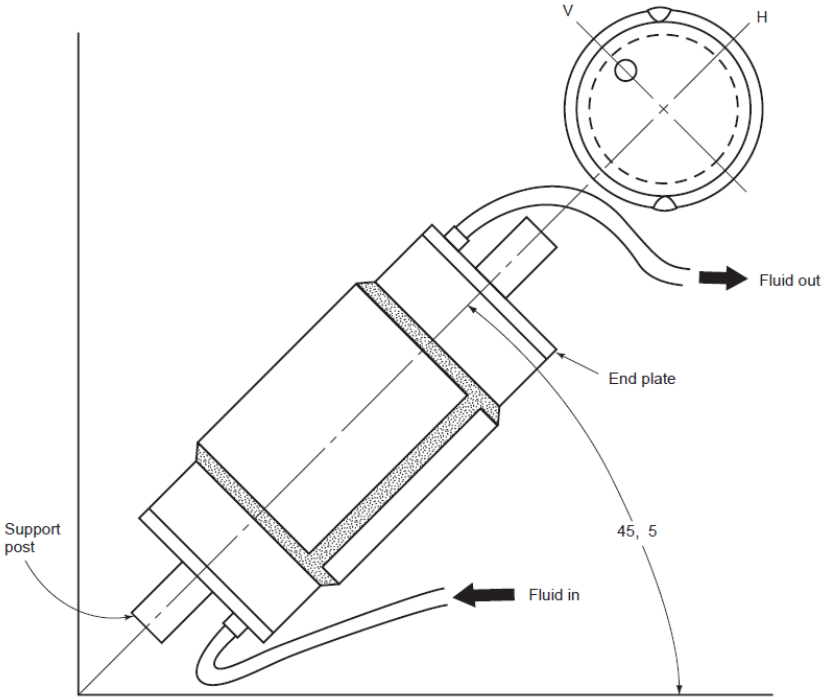

Note: This test position qualifies the procedure for all positions. Tests may be performed in other positions which will qualify the procedure for that position only.

API 1104 figure B-2

In-Service Welding

Qualifying both Sleeve and Branch. Required Testing:

- Tensile
- Nick Break
- Root or Side Bend
- Face or Side Bend

Additional Tests:

- Macro Testing (600 grit)
- Hardness Testing (350 Hv)

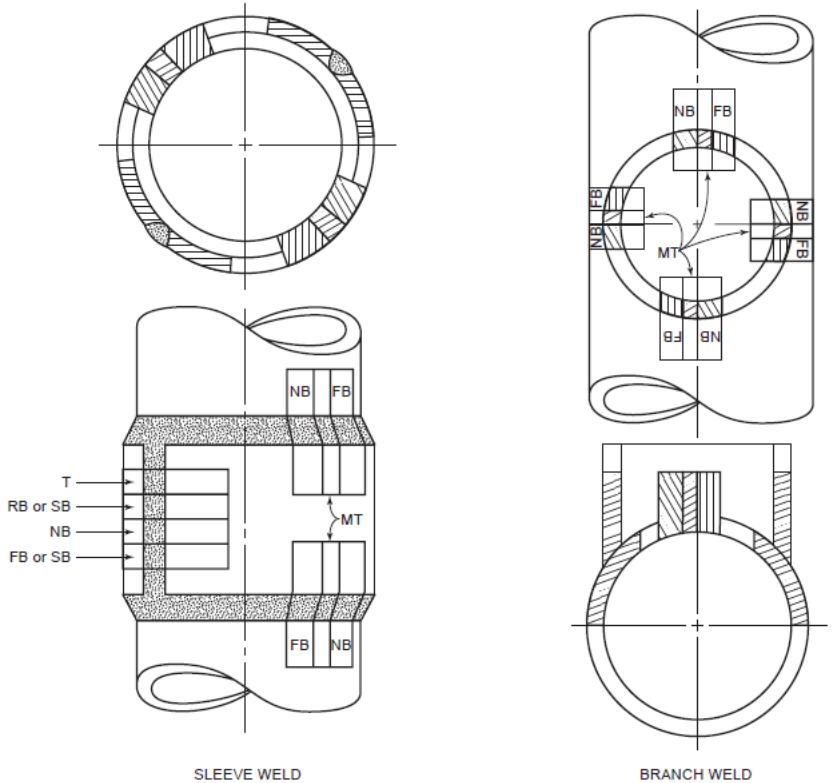

In Service Welding

Weld Sequence Example:

1. Weld Complete
2. Alternate each pass from one side to another
3. Complete one end before moving to other. Only tack weld the side welded first (if necessary)
4. Weld complete
5. Weld complete

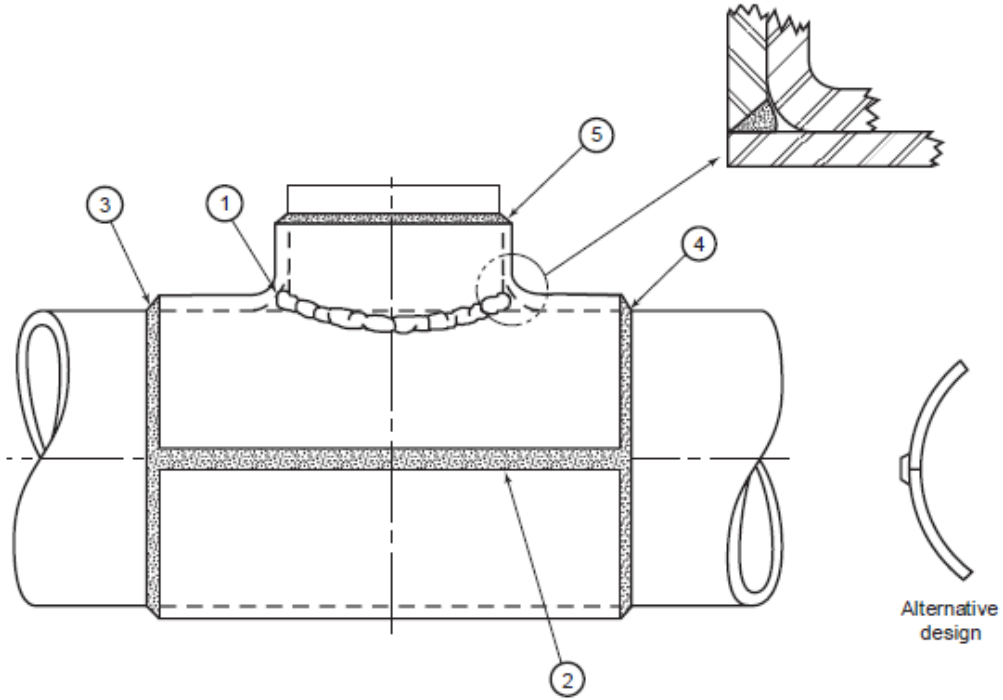

In-Service Welding

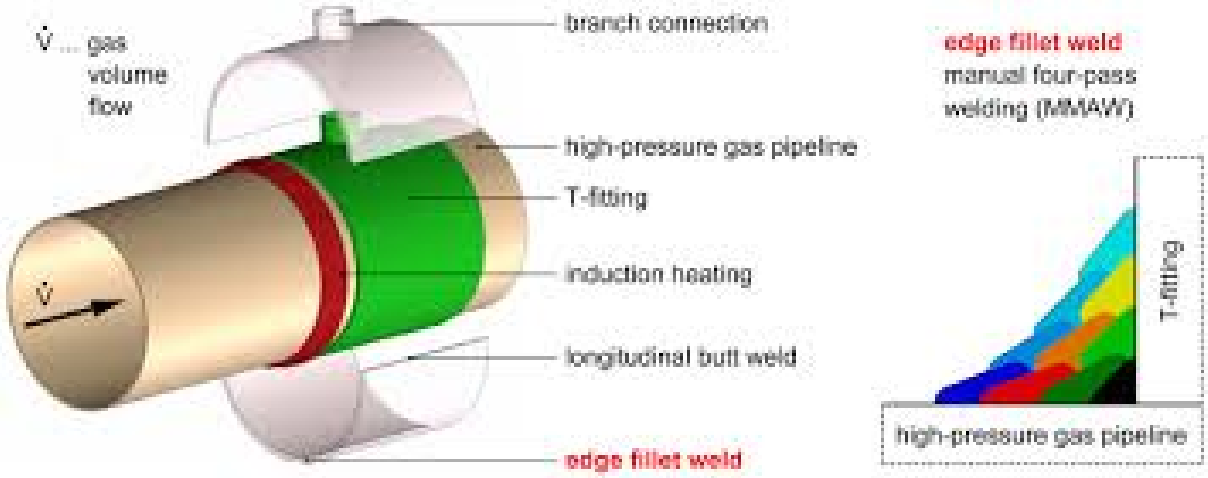

Bead Placement Sequence Example: Tempering Sequence

Cellulosic Electrodes (EXX10)

REPORT

June 16, 2009
PR-185-04508 Draft Final Report
EWI Project Nos. 46354CAP/47964GTH

Evaluation of Hydrogen Cracking in Weld Metal Deposited using Cellulosic-Coated Electrodes

Submitted to:

Pipeline Research Council International, Inc.
Arlington, VA

and

U.S. Department of Transportation
Washington, DC

EWI

MATERIALS JOINING TECHNOLOGY

Conclusions:

- If possible, cellulosic electrodes should be purchased in small, hermetically-sealed packages.
- Electrodes should be stored in cool, dry locations, and should not be exposed to direct sunlight.
- Preheat and interpass temperature recommendations should be strictly adhered to, and if possible, a post-weld hydrogen bake-out should be utilized.
- For steels of grade X70 and above, the conservative approach is to use low-hydrogen electrodes, GMAW, or FCAW.
- If cellulosic electrodes must be used for these higher-strength steels, the lowest grade which will produce adequate strength for the intended application should be chosen.
- Placing dried electrodes in humidity cabinets or dipping them in water is not recommended.
- *Electrodes which have been exposed to overly dry or overly humid conditions should be discarded.*

http://ntl.bts.gov/lib/44000/44200/44214/44214.pdf

Cellulosic Electrodes

Table 6. Results of Bend Testing for Restrained Welds Made Using Short Arc Lengths with Electrodes in the As-Received, Dried, and Rehydrated Conditions

Product	Type	Condition	Short Arc Length							
			Bend Radius	Engineer Evaluation of Bends						Test Lab Evaluation of Bends*
				No. of Defects	Total Length (mm)	Largest Defect Length (mm)	Comments	Corrected Defect Number	Corrected Defect Length (mm)	
ESAB SW 10P	E6010	As-received	1.25	5	5.5	3	3 mm of root defects	4	2.5	PH <1/8 in., pass
		Dried	2.5	7	5	2	2 mm of root defects	6	3	Crack > 1/8 in., fail
		Rehydrated	2.5	8	7	2	5 mm of root defects	5	4	PH <1/8 in., pass
Hobart PM Pro-60	E6010	As-received	2.5	2	2	1		2	2	PH <1/8 in., pass
		Dried	2.5	11	9	3	6 mm of root defects	6	3	Crack > 1/8 in., fail
		Rehydrated	2.5	5	7	5	5 mm of root defects	4	2	Crack > 1/8 in., fail
Lincoln SA 70+	E8010-G	As-received	1.5	1	1	1		1	1	PH or crack <1/8 in., pass
		Dried	2.5	2	1.5	1		2	1	PH <1/8 in., pass
		Rehydrated	1.5	1	0.5	0.5		1	0.5	PH <1/8 in., pass
Lincoln SA 90	E9010-G	As-received	1.5	0	0	0		0	0	No visual defects, pass
		Dried	1.5	3	3	2		3	3	PH >1/8 in., fail
		Rehydrated	1.5	5	9	7	7 mm of root defects	4	2	PH >1/8 in., fail

*PH = pinholes

EWI 28

http://ntl.bts.gov/lib/44000/44200/44214/44214.pdf

Consumers Energy Count on Us

Low-Hydrogen Electrodes (EXX15,16,18)

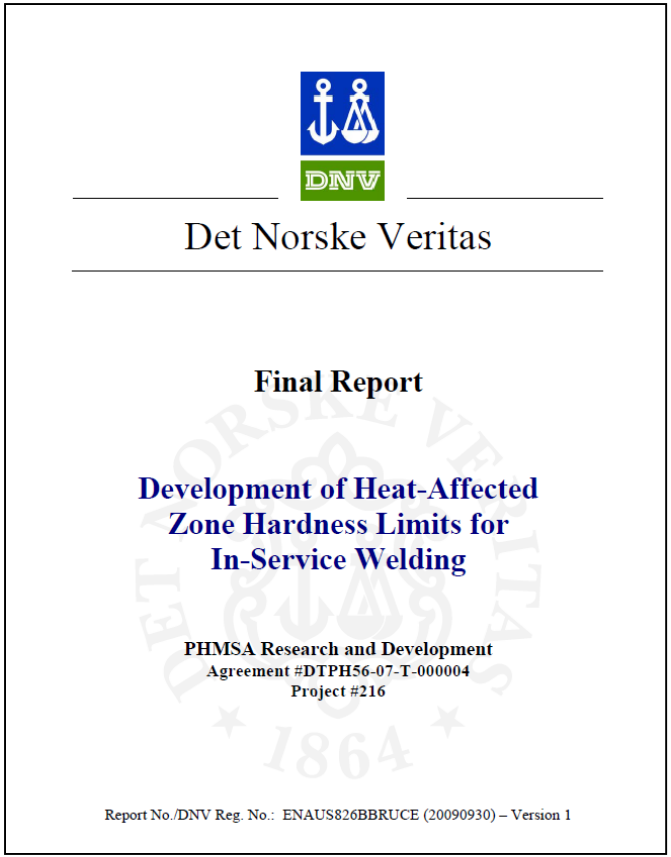
Det Norske Veritas

Final Report

Development of Heat-Affected Zone Hardness Limits for In-Service Welding

PHMSA Research and Development
Agreement #DTPH56-07-T-000004
Project #216

Report No./DNV Reg. No.: ENAUS826BBRUCE (20090930) – Version 1

Conclusions:

- Use Low-Hydrogen electrodes
  - Less than 4mL/100 (H4)
  - Use GMAW
- Purchase in low quantity packages
- Purchase hermetically sealed pkg.
- Discard unused portion at end of day
- Evaluate hardness levels to hydrogen content of filler metal

http://ntl.bts.gov/lib/44000/44200/44204/44204.pdf

Consumers Energy
Count on Us

In-Service Welding

DET NORSKE VERITAS

Final Report for PHMSA
Research and Development

Development of Heat-Affected
Zone Hardness Limits for
In-Service Welding

MANAGING RISK

DNV

Table 7. Results for Full-Scale Weldability Trials at DNV (continued)

Weld No./ Description	Mechanical Testing Results			Metallographic Examination Results		
	Specimen No.	Fracture Test	Face Bend Test	Specimen No.	Average HAZ Hardness, HV-10kg	Crack/ No Crack
D27 - GTN - Water - ~Cellulosic - High heat input	F1	Cracks[1,2]	Cracks[1]	M2	345	Cracks[1]
	F3	Cracks[1,2]	Cracks[1]	M4	253	Cracks[3]
	F5	Cracks[1,2]	Cracks[1]	[1] HAZ, [2] Weld Metal, [3] Solidification		
D30 - EB5 - Water - <4ml/100gm - Low heat input	F1	OK	OK	M2	429	OK
	F3	OK	OK	M4	377	OK
	F5	OK	OK			
D31- EB5 - Water - <4ml/100gm- Low heat input	F1	OK	OK	M2	410	OK
	F3	OK	OK	M4	419	OK
	F5	OK	OK			

http://ntl.bts.gov/lib/44000/44200/44204/44204.pdf

Consumers Energy
Count on Us

In-Service Welding – HP Distribution Pipe

How do we apply these requirements and recommendations to Distribution Systems?

Distribution Pipeline

- Typically 1¼ NPS to 12 NPS
- .140 WT to .250 WT
- API 5L-Gr. B to X60

Preheat Concerns

- Rubber Stoppers
- Ball Valves (200ºF max)
- O-Rings, Gaskets
- Leaking Gas
- Thermal Cooling Capacity

Burn-Through Concerns

- Thin walls
- Internal Corrosion
- External Corrosion
- Poor weld seams (old pipe)

SMAW Electrodes - What's available?

- Lincoln Sahara Ready Packs
- ESAB VacPaks
- Bohler Vac-Pack

In-Service Welding

SMAW Electrodes - What's *REALLY* available?

E8045, E7048

Advantages:

- Low Hydrogen
- Downhill Travel

Disadvantages:

- 1/8 inch – 11/64 inch
- 150-300 amps

E7018-H4R

Advantages:

- Low Hydrogen
- Small Diameters

Disadvantages:

- DCEP - Uphill
- 10 lbs. packages

E7016-H4

Advantages:

- Low Hydrogen
- Small Diameters
- DCEN – (55 to 100amps)

Disadvantages:

- 10 lbs. packages

In-Service Welding

Risks	Challenges	Tactics
Hydrogen Cracking	• Electrode/Process type • Electrode storage • Preheat >212°F • Surface moisture	• Use low hydrogen • <4 mL/100gm • Preheat to remove moisture • Manage electrode storage
Susceptible Microstructure	• Preheat is hard to maintain • Control hardness limits	• Use small diameter electrodes • Use stringer passes only • Tempering pass sequence
Tensile Stresses	• Minimize stress	• Tempering pass sequence • Use of stringer passes • API recommended sequences
Burn Through	• Available electrodes • Thin distribution pipe wt's • Wall loss to corrosion	• Use small diameter electrodes • Use DCEN for SMAW welds contacting pipe wall • Use UT thickness gauges for assessing remaining pipe wall.

Summery

Construction:

- Follow welding procedures, job specification and quality management manual.
- Bevel and Wall Thickness transitions
- Pipe Alignment
- Correct preheat and inter-pass temp control
- Proper electrode storage

In-Service Welding:

- Follow welding procedures, job specification and quality management manual.
- Burn Through
- Hydrogen Cracking
- Weld sequence
- Correct preheat and inter-pass temp control
- Proper electrode storage

Pipeline Distribution – Welding Practices

References:

- 49 CFR Part 192 - Transportation Of Natural And Other Gas By Pipeline: Minimum Federal Safety Standards
  http://phmsa.dot.gov/pipeline/tq/regs
- Guide to the Michigan Gas Safety Standards 23nd Edition
  http://www.dleg.state.mi.us/mpsc/gas/download/ssguide.pdf
- Evaluation of Hydrogen Cracking in Weld Metal Deposited using Cellulosic Coated Electrodes: http://ntl.bts.gov/lib/44000/44200/44214/44214.pdf
- Development of Heat-Affected Zone Hardness Limits for In-Service Welding
  http://ntl.bts.gov/lib/44000/44200/44204/44204.pdf
- US Department of Transportation – Construction Issues
  https://primis.phmsa.dot.gov/construction/docs/ConstructionIssues.pdf
- Technical Toolboxes In-Service Welding Practices and procedures – PRCI
- American Petroleum Institute – API 1104 20th Edition Welding of Pipelines and Related Facilities
- American Society of Mechanical Engineers – ASME B31.8 Gas Transmission and Distribution Piping Systems

Thank You

Jarrod Sanborn
Consumers Energy
Learning & Development
Consultant III – Welding
Cell: (810) 820.0950
Office: (989) 667.5244