CHAPTER 7

ROAD STORM DRAINAGE SYSTEMS

NOTE: All questions and comments should be directed to the Design Specialist, Design Support Area.

Revised June 2004

Chapter Table of Contents

7.1 Introduction/Purpose 7-6
7.2 Definitions 7-7
7.3 Policy and Design Criteria 7-10
7.3.1 Introduction 7-10
7.3.2 Storm Sewers 7-10
7.3.3 Bridge Decks 7-11
7.3.4 Curbs, Inlets, and Flumes 7-11
7.3.5 Detention Storage 7-11
7.3.6 Gutter Flow 7-11
7.3.7 Hydrology 7-12
7.3.8 Drainage Structures and Manholes 7-12
7.3.9 Locating Storm Sewers, Manholes, and Inlets 7-12
7.3.10 Roadside and Median Ditches 7-13
7.3.11 System Planning 7-13
7.4 Design Guidance and Procedure 7-14
7.4.1 Roadways with Enclosed Drainage 7-14
7.4.2 Depressed Roadways 7-14
7.4.3 Pavement and Bridge Deck Drainage 7-14
7.4.3.1 Cross Slope 7-14
7.4.3.2 Roadside and Median Channels 7-15
7.4.3.3 Medians/Barriers 7-15
7.4.3.4 Selection of Design Storm Frequency and Spread 7-15
7.4.3.5 Curb and Gutter 7-16
7.4.3.6 Gutter Flow Calculations 7-17
7.4.3.6.1 Introduction 7-17
7.4.3.6.2 Manning’s n for Pavements 7-17
7.4.3.6.3 Uniform Cross Slope Procedure 7-18
7.4.3.6.4 Composite Gutter Sections Procedure 7-18
7.4.3.6.5 V-Type Gutter Sections Procedure 7-24

7.4.4 Drainage Structures 7-25
7.4.4.1 Grate Inlets 7-25
7.4.4.2 Curb Opening Inlets 7-26
7.4.4.3 Combination Inlets 7-26
7.4.4.4 Slotted Drain Inlets 7-28
7.4.5 Inlet Locations 7-29
7.4.6 Inlet Spacing 7-30
7.4.6.1 General 7-30
7.4.6.2 Grate Inlets on Grade 7-31
7.4.6.3 Grate Inlets in Sag 7-38
7.4.6.4 Curb Opening Inlets on Grade 7-42
7.4.6.5 Curb Inlets in Sag 7-46
7.4.6.6 Supplemental Inlets 7-50
7.4.6.7 Inlet Spacing Computations 7-52
7.4.7 Manholes 7-57
7.4.7.1 Location 7-57
7.4.7.2 Types 7-57
7.4.7.3 Sizing 7-58
7.4.8 Storm Drain Systems 7-61
7.4.8.1 Introduction 7-61
7.4.8.2 Hydraulic Capacity 7-63
7.4.8.3 Minimum Sizes 7-67
7.4.8.4 Minimum Grades 7-67
7.4.8.5 Curved Alignment 7-67
7.4.9 Hydraulic Grade Line 7-68
7.4.9.1 Introduction 7-68
7.4.9.2 Tailwater 7-69
7.4.9.3 Exit Loss 7-70
7.4.9.4 Bend Loss 7-70
7.4.9.5 Friction Loss 7-70
7.4.9.6 Manhole Losses 7-71

7.4.9.7 Storm Sewer Drain, Preliminary Layout 7-75
7.4.9.8 Hydraulic Grade Line Design Procedure 7-77
7.4.10 Example Problem 7-83
7.4.11 Sag Culverts (Submerged Culverts, Inverted Siphons) 7-91
7.4.12 Underdrains 7-91
7.5 Maintenance 7-92
7.5.1 Drainage Structures 7-92
7.5.2 Storm Drains 7-92

References 7-93
Weblinks 7-94

Appendix (Corrected June 2004)

7-A Symbols and Acronyms 7-A-1

Figures

7-1 Hydraulic and Energy Grade Line 7-7
7-2 Flow in Triangular Gutter Sections 7-20
7-3 Ratio of Frontal Flow to Total Gutter Flow 7-21
7-4 Flow in Composite Gutter Sections 7-22
7-5 V-Type Gutter 7-24
7-6 Inlet Types 7-27
7-7 Slotted Inlet 7-28
7-8 Velocity in Triangular Gutter Sections 7-33
7-9 Grate Inlet Frontal Flow Interception Efficiency 7-34
7-10 Sketch of Spread 7-35
7-11 Grate Inlet Side Flow Interception Efficiency 7-37
7-12 Grate Inlet Capacity in Sump (Sag) Conditions 7-41
7-13 Curb Opening and Longitudinal Slotted Drain Inlet Length for Total Interception 7-44

7-14 Curb Opening and Slotted Drain Inlet Interception Efficiency 7-45
7-15 Depressed Curb Opening Inlet Capacity in Sag Locations 7-48
7-16 Location of Supplemental and Sag Inlets 7-52
7-17 Manhole Sizing Example 7-59
7-18 Nomograph for Computing Required Size of Circular Storm Sewer for Full Flow, n = 0.013 7-65
7-19 Values of Hydraulic Elements of Circular Section for Various Depths of Flow 7-66
7-20 Deflection Angle 7-72
7-21 Relative Flow Effect 7-73
7-22 Benching Types 7-74
7-23 Use of Energy Losses in Developing a Storm Sewer System Improper and Proper Designs 7-81
7-24 Example Plan and Profile 7-83
7-25 Sewer Profile with Calculated HGL Elevations 7-89

Tables

7-1 Manning's n for Gutter or Pavement Types 7-17
7-2 Supplemental Inlet Locations 7-51
7-3 Inlet Spacing Computation Sheet 7-56
7-4 Manhole Maximum Pipe Size 7-59
7-5 Conveyance Factor and Pipe Sizes 7-64
7-6 Minimum Sewer Slopes 7-67
7-7 Frequencies for Coincidental Occurrence 7-69
7-8 Correction Factors for Benching 7-75
7-9 Storm Sewer Preliminary Layout Worksheet 7-78
7-10 Storm Sewer Hydraulic Grade Line Worksheet 7-82
7-11 Tabulation Sheet for Design of Storm Sewers, Example 7-84
7-12 Hydraulic Grade Line Computation Form, Example 7-90

7.1 INTRODUCTION/PURPOSE

This chapter provides guidance on storm sewer design and analysis. Aspects of storm sewer design, such as system planning, pavement drainage, gutter flow calculations, inlet spacing, pipe sizing, and hydraulic grade line calculations are included.

In the design of an enclosed drainage system, it is necessary to have complete and accurate information regarding the existing drainage system. Before an existing storm sewer can be used to drain a new roadway or improvement, its size, location, structural condition, and capability to accept any additional flow must be carefully scrutinized. Occasionally, the original survey needs to be supplemented with additional drainage information.

The most desirable location for new sewers is outside the influence of the pavement area. Locating the sewer outside the pavement surface eliminates access points from the driving surface. When unable to locate a new sewer outside the pavement area due to trees, utilities, or other obstructions, the next choice would be in the center of a parking lane, and the last choice would be in the center of a driving lane.

The design of a drainage system must address the needs of the traveling public as well as those of the local community. The drainage system for roadways in an urbanized region can be more complex than for roadways in rural areas. This is often due to:

- The wide roadway sections, flat grades in longitudinal and transverse directions, shallow watercourses, and absence of side channels.
- The more costly property damage which may occur from ponding of water or from flow of water through developed areas.
- The fact that the roadway section must carry traffic but also convey the water to a discharge point. Unless proper precautions are taken, flow of water along the roadway will interfere with the passage of traffic.

The most serious effects of an inadequate roadway drainage system are:

- Damage to surrounding or adjacent property resulting from water overflowing the roadway curbs and entering such property.
- Risk and delay to traffic caused by excessive ponding in sags or excessive spread along the roadway.
- Weakening of base and subgrade due to saturation from frequent ponding of long duration.

7.2 DEFINITIONS

Following are discussions of concepts which will be important in a storm sewer analysis and design. These concepts will be used throughout the remainder of this chapter in dealing with different aspects of storm sewer analysis.

Bypass/Carryover - Flow which bypasses an inlet on grade and is carried in the street or channel to the next inlet downgrade. Inlets can be designed to allow a certain amount of carryover for one design storm and larger or smaller amounts for other storms.

Catch Basin - A structure, sometimes with a sump, for inletting drainage from such places as a gutter or median and discharging the water through a conduit. In common usage, it is a grated inlet, curb opening, or combination inlet with or without a sump.

Crown - The highest interior elevation of a culvert, sewer, drain pipe, or tunnel. This may also be referred to as underclearance or low chord.

Culvert - A structure that is usually designed hydraulically to convey surface runoff through an embankment. The span length is less than 20 feet.

Curb Opening - A drainage inlet consisting of an opening in the roadway curb.

Drainage Structure - Refers to manholes, catch basins, leaching basins, inlets, and drop inlets detailed in the Design Standard Plans or in the contract plans.

Drop Inlet - A drainage inlet with a horizontal or nearly horizontal opening.

Energy Grade Line - A line joining the elevation of energy heads; a line drawn above the hydraulic grade line a distance equivalent to the velocity head of the flowing water at each section along a stream channel or conduit. See Figure 7-1, Hydraulic and Energy Grade Line.

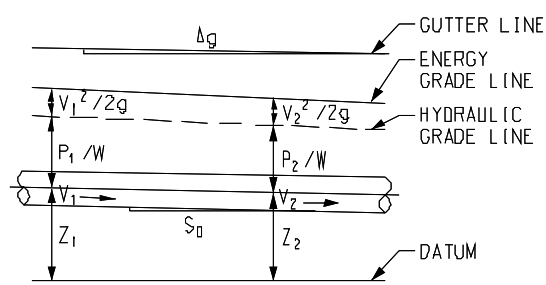

Figure 7-1 Hydraulic and Energy Grade Line

Frontal Flow - The portion of the flow which passes over the upstream side of a grate.

Grate Inlet - A drainage inlet composed of a grate in the roadway section or at the roadside in a low point, swale, or channel.

Grate Perimeter - The sum of the lengths of all sides of a grate, except that any side adjacent to a curb is not considered a part of the perimeter in weir flow computations.

Gutter - That portion of the roadway section adjacent to the curb which is utilized to convey stormwater runoff. A uniform gutter section has a constant cross-slope.

Hydraulic Grade Line - A profile of the piezometric level to which the water would rise in piezometer line tubes along a pipe run. In open channel flow, it is the water surface. See Figure 7-1, Hydraulic and Energy Grade Line.

Inlet Efficiency - The ratio of flow intercepted by an inlet to total flow in the gutter.

Inlets - Structures for capturing concentrated surface flow. May be located along the roadway, in a gutter, in the highway median, or in a field.

Invert - The lowest interior elevation of a culvert, sewer, or tunnel.

Leaching Basin - A drainage structure with a porous sump bottom, as opposed to the concrete sump of the catch basin. Leaching basins should only be used where soils will allow infiltration and where potential groundwater contaminants will not be introduced through stormwater.

Pressure Head - Pressure head is the height of a column of water that would exert a unit pressure equal to the pressure of the water.

Scupper - A vertical hole through a bridge deck for the purpose of deck drainage. Sometimes, a horizontal opening in the curb or barrier is called a scupper.

Side Flow Interception - Flow which is intercepted along the side of a grate inlet, as opposed to frontal interception.

Slotted Drain Inlets - A drainage inlet composed of a continuous slot built into the top of a pipe which serves to intercept, collect, and transport the flow. Two types in general use are the vertical riser and the vane type.

Splash-Over - Portion of frontal flow at a grate which skips or splashes over the grate and is not intercepted.

Spread - The accumulated flow in and next to the roadway gutter. This water often represents an interruption to traffic flow during rainstorms. The lateral distance, in feet, of roadway ponding from the curb.

Storm Sewer - A closed or open conduit that conveys stormwater that has been collected by inlets to an adequate outfall. It generally consists of laterals or leads, and trunk lines or mains. Culverts connected to the storm sewer system are considered part of the system.

Trunk Line - A trunk line is the main storm sewer line. Lateral lines may be connected at inlet structures or access holes. A trunk line is sometimes referred to as a "main."

Velocity Head - A quantity proportional to the kinetic energy of flowing water expressed as a height or head of water, ($V^2/2g$).

A list of symbols and acronyms used throughout this chapter are included in Appendix 7-A.

7.3 POLICY AND DESIGN CRITERIA

7.3.1 Introduction

Highway storm sewer facilities collect stormwater runoff and convey it through the roadway right-of-way in a manner which adequately drains the roadway and minimizes the potential for flooding and erosion to properties adjacent to the right-of-way. Storm sewer facilities consist of: curbs, gutters, storm sewers, channels, and culverts. The placement and hydraulic capacities of storm sewer facilities should be designed to take into consideration damage to adjacent property, and to secure as low a degree of risk of traffic interruption by flooding as is consistent with the importance of the road, the design traffic service requirements, and available funds.

Following is a summary of policies which should be followed for storm sewer design and analysis. For a general discussion of policies and guidelines for storm sewer, the designer is referred to the publication, *A Policy on Geometric Design of Highways and Streets*, published by AASHTO. For more design and engineering guidance refer to AASHTO, *Highway Drainage Guidelines*, Volume 9, and FHWA, HEC-22.

7.3.2 Storm Sewers

Design Factors for Storm Sewers:

- Contributing drainage area
- Slope of ground
- Type of soil
- Ground cover and land use as it relates to the determination of the runoff coefficient "C"
- Choice of average rainfall intensity curve - design frequency and zone
- Risk associated with possible overload of sewer
- The elevation difference of the hydraulic grade line and gutter line
- Future development and local ordinances
- Participation of municipality if sewer is to accommodate more than the needs of the highway
- Location of catch basins and inlets
- Location of trunk sewer - horizontally and vertically
- Location, flow line, and available capacity of any existing sewers
- Flow lines and contributing area of any connecting sewers
- Existing or proposed underground utilities
- Elevation, location, and adequacy of outlets
- Velocity

- Ease and economics of constructing sewer
- Discharge water quality controls per National Pollutant Discharge Elimination System (NPDES) general permit
- Pipe material

7.3.3 Bridge Decks

Zero gradients, sag vertical curves, and super elevation transitions with flat pavement sections should be avoided on bridges. The minimum desirable longitudinal grade for bridge deck drainage is 0.4 percent. Many bridges do not require any drainage facilities at all. Chapter 6, Bridges, discusses the maximum length of deck permitted without drainage facilities. Quantity and quality of runoff should be maintained as required by applicable stormwater regulations. See Chapter 6, Section 6.3, for additional information.

7.3.4 Curbs, Inlets, and Flumes

Curbs or dikes, inlets, and chutes or flumes are used where runoff from the pavement would erode fill slopes and/or to reduce right-of-way needed for shoulders, channels, etc. Where storm sewers are necessary, pavement sections are usually curbed. Inlets should not be spaced more than 300 feet apart. Spread should be checked to assure this is adequate.

7.3.5 Detention Storage

Reduction of peak flows can be achieved by the storage of runoff in detention basins, storm sewer pipes, swales or channels, and other detention storage facilities. Stormwater can then be released to the downstream conveyance facility at a reduced flow rate. This concept should be considered at locations where existing downstream conveyance facilities are inadequate to handle peak flow rates from highway storm sewer facilities. In many locations highway agencies or developers are not permitted to increase rates of runoff over existing conditions, thus necessitating detention storage facilities. Additional benefits may include the reduction of downstream pipe sizes and the improvement of water quality by removing sediment and/or pollutants. (See Chapter 8, Stormwater Storage Facilities, and Chapter 2, Legal Policy and Procedure.)

7.3.6 Gutter Flow

Gutter flow calculations are necessary to relate the quantity of flow to the spread of water on the shoulder, parking lane, or pavement section.

Desirable gutter grades should not be less than 0.3 percent for curbed pavements with a minimum of 0.2 percent. Minimum pavement cross slope should not be less than 2 percent for new construction/re-construction or 1.5 percent for non-freeway resurfacing, restoration, and rehabilitation projects. Additional cross slope considerations are discussed in Section 7.4.3.1.

It is desirable to provide a break in cross slope at two lanes, with three lanes the upper limit. Median areas should not be drained across traveled lanes.

7.3.7 Hydrology

The Rational Method is the most common method in use for the design of storm sewers when a peak flow rate is desired. Its use should be limited to systems with drainage areas of 20 acres or less. A minimum time of concentration of 15 minutes is generally acceptable (unless in a depressed roadway where 10 minutes should be used). The Rational Method should not be used in design of drainage systems involving detention storage, pumping stations, and large or complex storm systems. These situations require the development of a runoff hydrograph. The Rational Method is discussed in Chapter 3, Hydrology.

7.3.8 Drainage Structures and Manholes

The term drainage structure refers to all types of manholes and inlets such as grate inlets, curb inlets, slotted inlets, catch basins, and leaching basins. Drainage structures are sized and located to limit the spread of water on traffic lanes to tolerable widths. Note: Design storm is part of the design criteria. The width of water spread on the pavement at sags should not be substantially greater than the width of spread encountered on continuous grades.

Grate inlets and depression of curb opening inlets should be located outside the through traffic lanes to minimize the shifting of vehicles attempting to avoid them. All grate inlets shall be bicycle safe when used on roadways that allow bicycle travel. Curb inlets are preferred to grate inlets at major sag locations because of their debris handling capabilities. When grate inlets are used at sag locations, assume they are half plugged with debris and size accordingly.

In locations where significant ponding may occur, such as at underpasses or sag vertical curves in depressed sections, it is recommended practice to place supplemental inlets on each side of the inlet at the low point in the sag. Review Section 7.4.5 for a discussion on the location of inlets and Section 7.4.7 for more on manholes.

7.3.9 Locating Storm Sewers, Manholes, and Inlets

All new sewers on freeway projects shall be located outside the pavement area.

Manholes are utilized to provide entry to underground storm sewers for inspection and cleanout. Inlets can be used as manholes when entry to the system can be provided at the inlet, so the benefit of extra stormwater interception can be achieved with minimal additional cost.

Manholes should not be located in traffic lanes; however, when it is impossible to avoid locating a manhole in a traffic lane, care should be taken to ensure it is not in the normal vehicle wheel path.

Inlets should be spaced to accommodate the design spread. They should not be spaced more than 300 feet apart.

7.3.10 Roadside and Median Ditches

Large amounts of runoff should be intercepted before reaching the highway in order to minimize the deposit of sediment and other debris on the roadway and to reduce the amount of water that must be carried in the gutter section. Slope median areas and inside shoulders to a center depression to prevent runoff from the median area from running across the pavement. Surface channels should have adequate capacity for the design runoff and should be located and shaped in a manner that does not present a traffic hazard. Outside of the clear zone, cover E and G as shown in the standard plans (numbers R-10-Series and R-12-Series, respectively) should be used; otherwise, a guardrail should be put in place. Where permitted by the design velocities, channels should have a vegetative lining. Appropriate linings may be necessary where vegetation will not control erosion. For additional information, see Chapter 4, Channels.

7.3.11 System Planning

System planning prior to commencing the design of a storm sewer system is essential. The basics required are discussed in Section 7.4 and include the general design approach, type of data required, information on initiating a cooperative agreement with a municipality, the importance of a preliminary sketch, and some special considerations.

Cooperative storm sewer projects with cities and municipalities may be beneficial where both a mutual economic benefit and a demonstrated need exists. Early coordination with the governmental entity involved is necessary to determine the scope of the project. Each cooperative project may be initiated by a resolution adopted by the governing body of the municipality either (1) requesting the improvements and/or indicating its willingness to share the cost of a State project, or (2) indicating the municipality's intention to make certain improvements and requesting State cost participation in the municipal project.

7.4 DESIGN GUIDANCE AND PROCEDURE

7.4.1 Roadways with Enclosed Drainage

The computed runoff for a roadway with curb and gutter shall be based on a 10 percent chance (10-year) storm frequency. The sewer should be designed to flow full, i.e., with a hydraulic grade line at or near the top of pipe.

The pipe will be allowed to surcharge if caused by high receiving waters. The surcharge elevation should be a minimum of 1 foot below the gutter grade of the roadway.

7.4.2 Depressed Roadways

The method for designing storm sewers for depressed roadways is the same as for a roadway with enclosed drainage, except that runoff shall be computed using a 2 percent chance (50-year) frequency and the hydraulic grade line must be a minimum of 1 foot below the gutter grade line of the roadway (pressure flow). A depressed roadway will require a pumping station when a gravity drainage system cannot be used to drain the low points. Frequently, MDOT must provide a trunk sewer and an adequate and properly designed independent outlet. An existing municipal sewer may only be used by agreement. Contact the Design Engineer - Hydraulics/Hydrology for assistance.

7.4.3 Pavement and Bridge Deck Drainage

Roadway features considered during gutter, inlet, and pavement drainage calculations include:

- longitudinal and cross slope,
- curb and gutter sections,
- roadside and median ditches, and
- bridge decks.

The pavement width, cross slope, and profile control the time it takes for stormwater to drain to the gutter section. The gutter cross section and longitudinal slope control the quantity of flow which can be carried in the gutter section.

7.4.3.1 Cross Slope

MDOT uses 2 percent pavement cross slope as stated in Chapter 6 of the *Road Design Manual* and as shown in Standard Plan R-107 Series. The AASHTO Policy on Geometric Design, 1994, should be referenced and the Traffic and Safety Division consulted prior to deviation from MDOT practice.

7.4.3.2 Roadside and Median Channels

Roadside channels and median channels are part of the storm drain system and are commonly used with uncurbed roadway sections to convey runoff from the highway pavement and from areas which drain toward the highway. Due to right-of-way limitations, roadside channels cannot be used on most urban arterials. They can be used in cut sections, depressed sections, and other locations where sufficient right-of-way is available and driveways or intersections are infrequent. Where practical, the flow from major areas draining toward curbed highway pavements should be intercepted in the ditch as appropriate.

It is preferable to slope median areas and inside shoulders to a center swale to prevent drainage from the median area from running across the pavement. This is particularly important for high-speed facilities and for facilities with more than two lanes of traffic in each direction. Additional information on channels can be found in Chapter 4, Natural Channels and Roadside Ditches.

7.4.3.3 Medians/Barriers

Where median barriers are used, and particularly on horizontal curves with associated super elevations, it is necessary to provide inlets and connecting storm drains to collect the water which accumulates against the barrier. In some cases weep holes in the barrier can be used for this purpose.

7.4.3.4 Selection of Design Storm Frequency and Spread

The major considerations for selecting a design frequency and spread include highway classification, because it defines and reflects public expectations for finding water on the pavement surface. Ponding should be minimized on the traffic lanes of high-speed, high-volume highways.

Highway speed is another major consideration, because at speeds greater than 45 miles per hour, even a shallow depth of water on the pavement can cause hydroplaning. Design speed is recommended for use in evaluating hydroplaning potential. When the design speed is selected, consideration should be given to the likelihood that legal posted speeds may be exceeded.

Other considerations include inconvenience, hazards, and nuisances to pedestrian traffic and buildings which are located within the splash zone. These considerations should not be underestimated and, in some locations (such as commercial areas), may assume major importance.

For high volume roads, the design frequency should be the 10 percent chance (10-year) storm and spread should be contained within the shoulder. If designing at a sag point, use a 2 percent chance (50-year) storm and continue to contain spread within the shoulder.

This criteria applies to shoulder widths of 6 feet or greater. Where shoulder widths are less than 6 feet, a maximum design spread of 6 feet should be considered.

7.4.3.5 Curb and Gutter

Curbing at the outside edge of pavements is normal practice for low-speed, urban highway facilities. Curbs serve several purposes, which include containing the surface runoff within the roadway, preventing erosion, and providing pavement delineation. Curbs may be either barrier or mountable type, and are typically Portland cement concrete, although bituminous curb is used occasionally. Barrier curbs range in height from 6 to 10 inches. Mountable curbs are less than 6 inches in height and have rounded or plane sloping faces. Gutters are available in 1 through 3-foot widths. See MDOT Standard Plans Numbers: R-30-Series, R-31-Series, R-32-Series, and R-33-Series. A curb and gutter forms a triangular channel that can be an efficient hydraulic conveyance facility which can convey runoff of a lesser magnitude than the design flow without interruption of the traffic. When a design storm flow occurs, there is a spread or widening of the conveyed water surface and the water spreads to include not only the gutter width, but also parking lanes or shoulders and portions of the traveled surface. This is the width the hydraulic engineer is most concerned about in curb and gutter flow, and limiting this width becomes a very important design criterion.

It is desirable to intercept runoff from cut slopes and other areas draining toward the roadway before it reaches the highway. Interception helps minimize sedimentation and other debris on the roadway and reduces the amount of water which must be carried in the gutter section. Shallow swale sections at the edge of the roadway pavement or shoulder offer advantages over curbed sections where curbs are not needed for traffic control. These advantages include a lesser hazard to traffic than a near-vertical curb and hydraulic capacity that is not dependent on spread on the pavement. These swale sections without curbs are particularly appropriate where curbs have historically been used to prevent water from eroding fill slopes.

Shoulder gutters and/or curbs are recommended on fill slopes higher than 20 feet; standard slopes are 1V:2H. They are also recommended on fill slopes higher than 10 feet; standard slopes are 1V:6H and 1V:3H if the roadway grade is greater than 2 percent. In areas where permanent vegetation cannot be established, shoulder gutter and/or curbs are recommended on fill slopes higher than 10 feet regardless of the grade. Inspection of the existing/proposed site conditions and contact with maintenance and construction personnel shall be made by the designer to determine if vegetation will survive.

Shoulder gutter and/or curbs may be appropriate at bridge ends where concentrated flow from the bridge deck would otherwise run down the fill slope. This section of gutter should be long enough to include the transitions. Shoulder gutters are not required on the high side of super elevated sections or adjacent to barrier walls on high fills.

7.4.3.6 Gutter Flow Calculations

7.4.3.6.1 Introduction

Gutter flow calculations are necessary in order to relate the quantity of flow (Q) in the curbed channel to the spread of water on the shoulder, parking lane, or pavement section. The nomograph on Figure 7-2, Flow in Triangular gutter Sections, can be utilized to solve discharge or spread for uniform cross slope channels, composite gutter sections, and V-shape gutter sections. Figure 7-4, Flow in Composite Gutter Sections, is also very useful in solving composite gutter section problems.

Composite gutter sections have a greater hydraulic capacity for normal cross slopes than uniform gutter sections and are, therefore, preferred. Example problems for each gutter type are shown in the following sections.

7.4.3.6.2 Manning's n for Pavements

Table 7-1 gives a list of acceptable Manning n values for gutters or pavement.

Table 7-1 Manning's n for Gutter or Pavement Types

Type of Gutter or Pavement	Manning's n
Concrete gutter, troweled finish	0.012
Asphalt Pavement: Smooth texture Rough texture	 0.013 0.016
Concrete gutter-asphalt pavement: Smooth Rough	 0.013 0.015
Concrete pavement: Float finish Broom finish	 0.014 0.016
For gutters with small slope, where sediment may accumulate, increase above n values by:	0.002

Reference: USDOT, FHWA, HDS-3 (1961)

7.4.3.6.3 Uniform Cross Slope Procedure

The nomograph in Figure 7-2, Flow in Triangular Gutter Sections, is used with the following procedures to find gutter capacity for uniform cross slopes:

CONDITION 1: Find spread, given gutter flow.

Step 1 Determine input parameters, including longitudinal slope (S), cross slope (S_x), gutter flow (Q), and Manning's n.

Step 2 Draw a line between the S and S_x scales and note where it intersects the turning line.

Step 3 Draw a line between the intersection point from Step 2 and the appropriate gutter flow value on the capacity scale. If Manning's n is 0.016, use Q from Step 1; if not, use the product of Q and n.

Step 4 Read the value of the spread (T) at the intersection of the line from Step 3 and the spread scale.

CONDITION 2: Find gutter flow, given spread.

Step 1 Determine input parameters, including longitudinal slope (S), cross slope (S_x), spread (T), and Manning's n.

Step 2 Draw a line between the S and S_x scales and note where it intersects the turning line.

Step 3 Draw a line between the intersection point from Step 2 and the appropriate value on the T scale. Read the value of Q or Qn from the intersection of that line on the capacity scale.

Step 4 For Manning's n values of 0.016, the gutter capacity (Q) from Step 3 is selected. For other Manning's n values, the gutter capacity times n (Qn) is selected from Step 3 and divided by the appropriate n value to give the gutter capacity.

7.4.3.6.4 Composite Gutter Sections Procedure

Figure 7-2, Flow in Triangular Gutter Sections, can be used to find the flow in a gutter section with width (W) less than the total spread (T). Such calculations are generally used for evaluating composite gutter sections or frontal flow for grate inlets.

CONDITION 1: Find spread, given flow.

Step 1 Determine input parameters, including longitudinal slope (S), cross slope (S_x), depressed section slope (S_w), depressed section width (W), Manning's n, gutter flow (Q), and a trial value of the gutter capacity above the depressed section (Q_s). (Example: S = 0.01; S_x = 0.02; S_w = 0.06; W = 2.0 feet; n = 0.016; Q = 2.0 cfs; try Q_s = 0.7 cfs)

Step 2 Calculate the gutter flow in W (Q_w), using the equation:

$$\mathbf{Q_w = Q - Q_s} \quad (Q_w = 2.0 - 0.7 = 1.3 \text{ cfs}) \qquad \textbf{(7.1)}$$

Step 3 Calculate the ratios Q_w/Q and S_w/S_x and use Figure 7-3 to find an appropriate value of W/T. (Q_w/Q = 1.3/2.0 = 0.65 S_w/S_x = 0.06/0.02 = 3. From Figure 7-3, W/T = 0.27).

Step 4 Calculate the spread (T) by dividing the depressed section width (W) by the value of W/T from Step 3. (T = 2.0/0.27 = 7.4 feet).

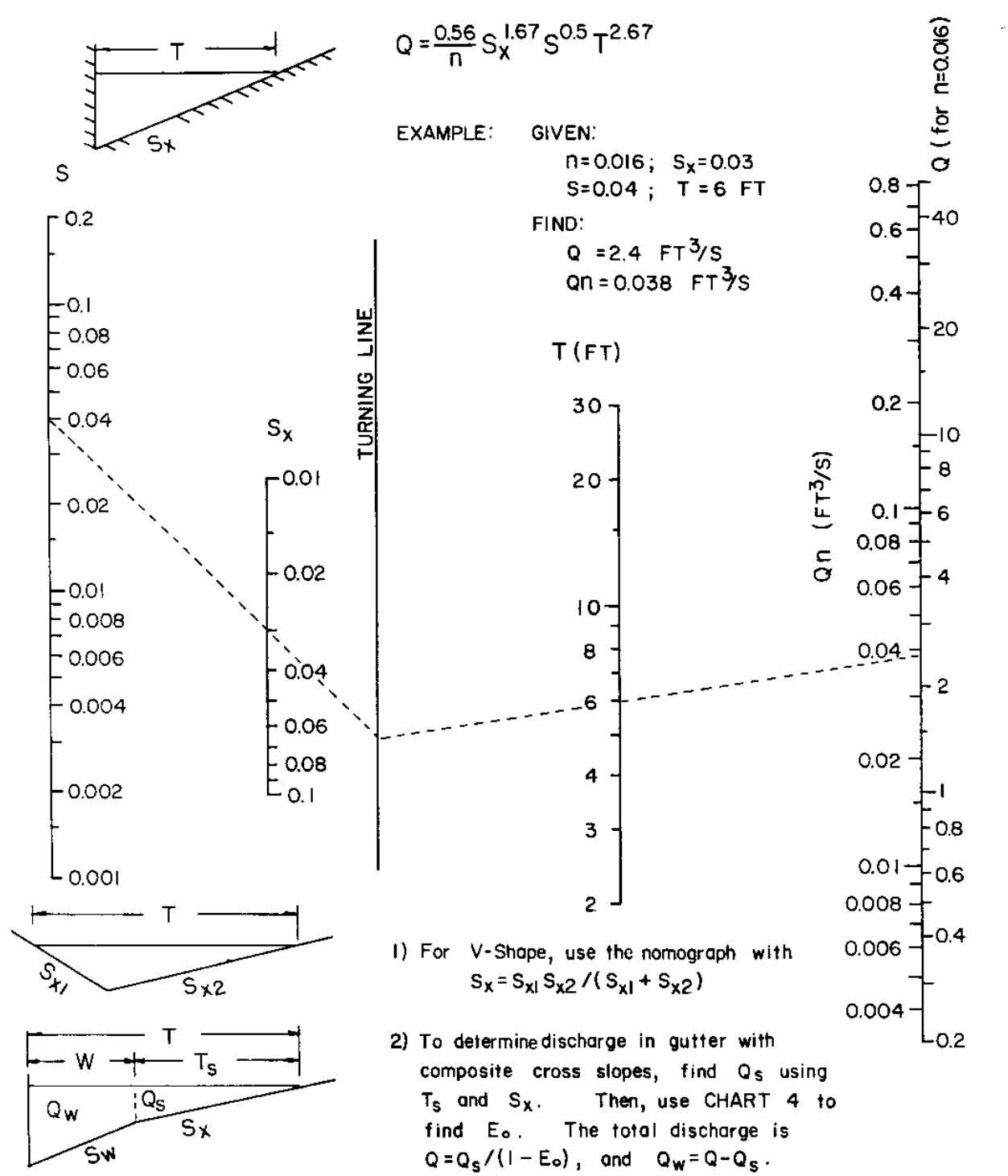

Figure 7-2 Flow in Triangular Gutter Sections

Source: HEC-12

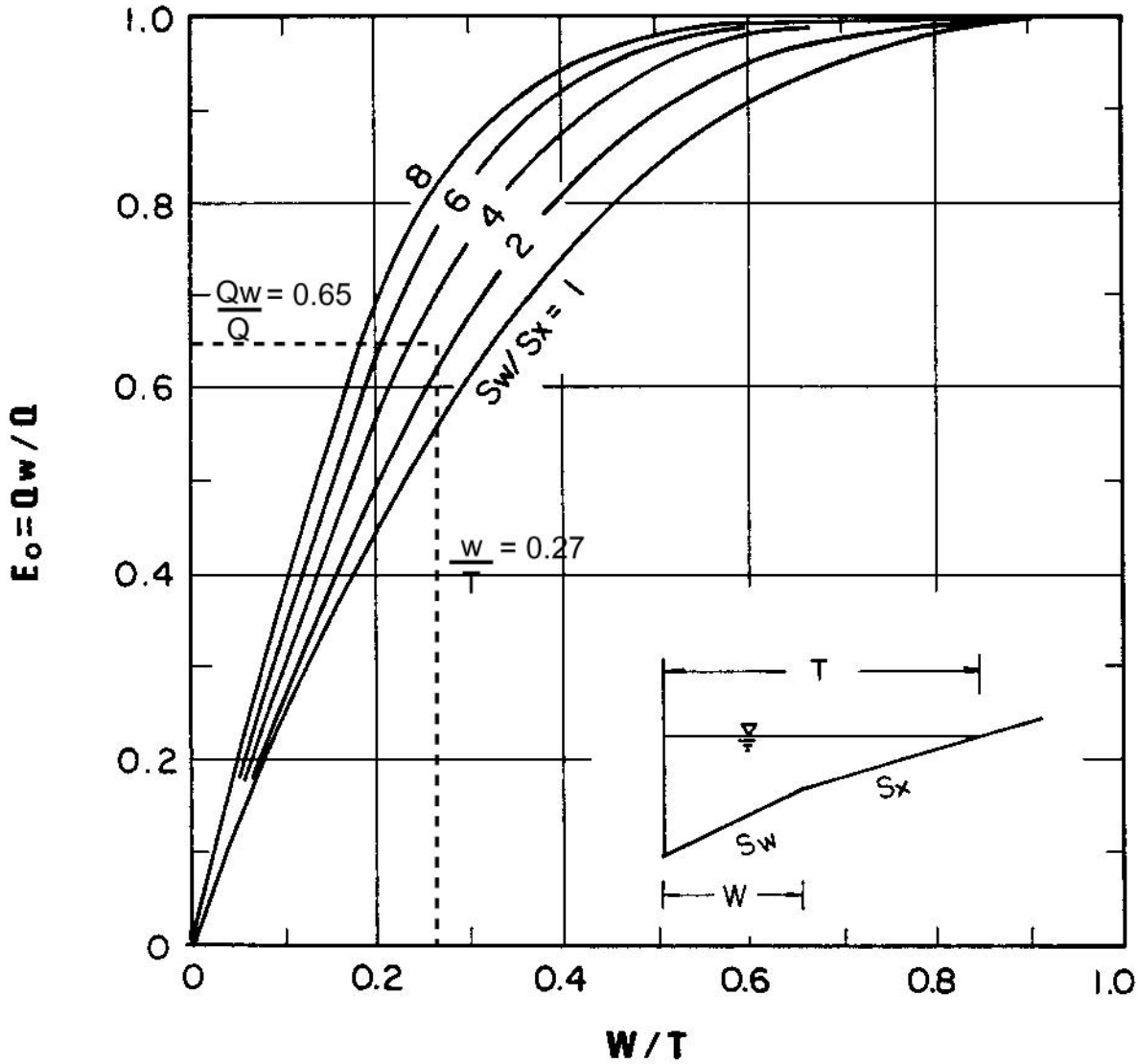

Figure 7-3 Ratio of Frontal Flow to Total Gutter Flow

Note: Dashed lines represent values found in the example problem (Section 7.4.3.6.4, CONDITION 1).

Source: HEC-12

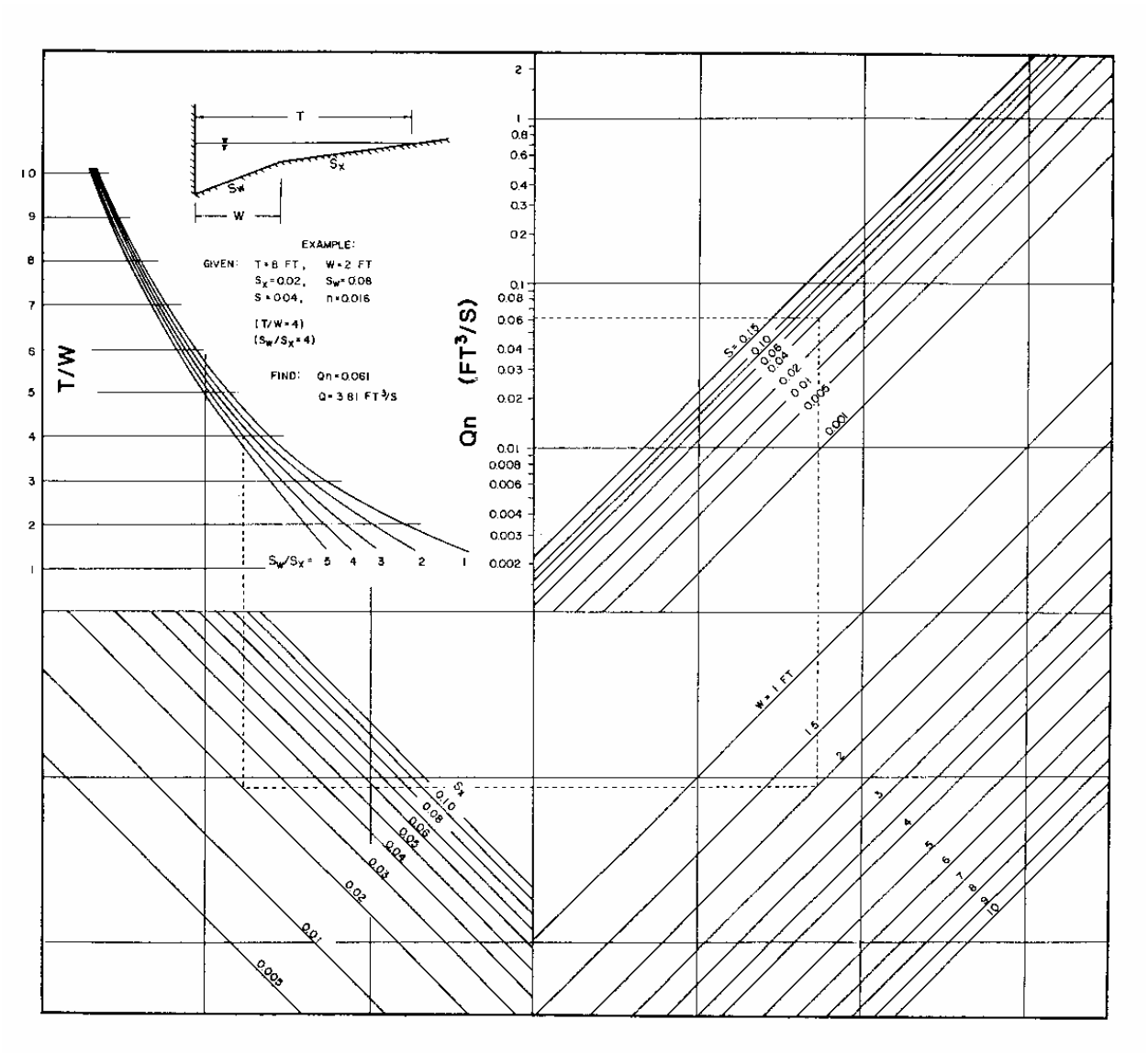

Figure 7-4 Flow in Composite Gutter Sections

Note: Dashed lines represent values for the example in the upper left corner.

Source: HEC-12

Step 5 Find the spread above the depressed section (T_s) by subtracting W from the value of T obtained in Step 4. (T_s = 7.4 - 2.0 = 5.4 feet)

Step 6 Use the value of T_s from Step 5 along with Manning's n, S, and S_x to find the actual value of Q_s from Figure 7-2. (From Figure 7-2, Q_s = 0.5 cfs)

Step 7 Compare the value of Q_s from Step 6 to the trial value from Step 1. If values are not comparable, select a new value of Q_s and return to Step 1.

(Compare 0.5 to 0.7 "no good," Try Q_s = 0.81 cfs; then 2.0 - 0.81 = 1.19 cfs, and 1.19/2.0 = 0.6; from Figure 7-3, W/T = 0.23, then T = 2.0/0.23 = 8.7 feet and T_s = 8.7 - 2.0 = 6.7 feet from Figure 7-2, Q_s = 0.81 cfs OK).

ANSWER: Spread T = 8.7 feet

CONDITION 2: Find gutter flow, given spread.

Step 1 Determine input parameters, including spread (T), spread above the depressed section (T_s), cross slope (S_x), longitudinal slope (S), depressed section slope (S_w), depressed section width (W), Manning's n, and depth of gutter flow (d).

EXAMPLE: (Allowable spread T = 10.0 feet; W = 2.0 feet; T_s = 10.0 - 2.0 = 8.0 feet; S_x= 0.04; S = 0.005 feet/foot; S_w = 0.06; n = 0.016; d = 0.43 feet)

Step 2 Use Figure 7-2 to determine the capacity of the gutter section above the depressed section (Q_s). Use the procedure for uniform cross slopes Condition 2, substituting T_s for T. (from Figure 7-2, Q_s = 3.0 cfs.)

Step 3 Calculate the ratios W/T and S_w/S_x, and from Figure 7-3; find the appropriate value of E_o (the ratio of Q_w/Q). (W/T = 2.0/10.0 = 0.2; S_w/S_x = 0.06/0.04 = 1.5; from Figure 7-2, E_o = 0.46)

Step 4 Calculate the total gutter flow using the equation:

$$\mathbf{Q = Q_s/(1 - E_o)} \qquad \textbf{(7.2)}$$

Where: Q = gutter flow rate, cfs
Q_s = flow capacity of the gutter section above the depressed section, cfs
E_o = ratio of frontal flow to total gutter flow (Q_w/Q)

(Q = 3.0/(1 - 0.46) = 5.5 cfs)

Step 5 Calculate the gutter flow in width (W), using Equation 7.1.

($Q_w = Q - Q_s = 5.5 – 3.0 = 2.5$ cfs)

NOTE: Figure 7-4 can also be used to calculate the flow in a composite gutter section.

7.4.3.6.5 V-Type Gutter Sections Procedure

Figure 7-2, Flow in Triangular Gutter Sections, can also be used to solve V-Type channel problems. The spread (T) can be calculated for a given flow (Q) or the flow can be calculated for a given spread. This method can be used to calculate approximate flow conditions in the triangular channel adjacent to concrete median barriers. It assumes the effective flow is confined to the V channel with spread T_1.

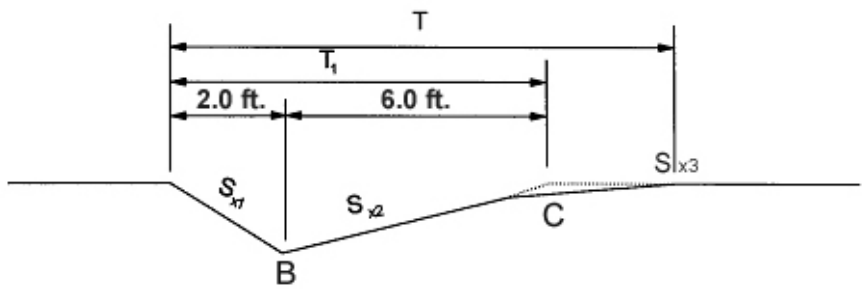

Figure 7-5 V-Type Gutter

CONDITION 1: Given flow (Q), find spread (T).

Step 1 Determine input parameters, including longitudinal slope (S), cross slope $S_x = S_{x1}S_{x2}/(S_{x1} + S_{x2})$, Manning's n, total flow (Q). (Example: $S = 0.01$, $S_{x1} = 0.06$, $S_{x2} = 0.04$, $S_{x3} = 0.015$, $n = 0.016$, $Q = 2.0$ cfs, shoulder = 6.0 feet)

Step 2 Calculate S_x
$S_x = S_{x1}S_{x2}/(S_{x1} + S_{x2})$ $S_x = (0.06)(0.04)/(0.06 + 0.04) = 0.024$

Step 3 Solve for T_1 using the nomograph on Figure 7-2.

T_1 is a hypothetical width that is correct if it is contained within S_{x1} and S_{x2}. From nomograph $T_1 = 8.4$ feet; however, since the shoulder width of 6.0 feet is less than 8.4 feet, S_{x2} is 0.04 and the pavement cross slope S_{x3} is 0.015, T will actually be greater than 8.4 feet; 8.4 - 2.0 = 6.4 feet which is greater than 6.0 feet; therefore, the spread is greater than 8.4 feet.

Step 4 To find an approximate total spread,
Point B: 6.4 feet x 0.04 = 0.25 foot
Point C: 0.25 foot - (6 feet x 0.04) = 0.01 foot

Step 5 Solve for the spread on the pavement. (Pavement cross slope = 0.015)
$T_{0.015}$ = 0.01/0.015 = 0.7 foot

Step 6 Find the actual total spread (T). T = 2.0 + 6.0 + 0.7 = 8.7 feet

CONDITION 2: Given spread (T), find flow (Q)

Step 1 Determine input parameters such as longitudinal slope (S), cross slope ($S_{x)}$ = $S_{x1}S_{x2}/(S_{x1} + S_{x2})$, Manning's n, and allowable spread. (Example: n = 0.016, S = 0.015, S_{x1} = 0.06, S_{x2} = 0.04, T = 6.0 feet.)

Step 2 Calculate S_x
$S_x = S_{x1}S_{x2}/(S_{x1} + S_{x2})$ = (0.06)(0.04)/(0.06 + 0.04) = 0.024

Step 3 Using Figure 7-2, solve for Q
For T = 6.0 feet, Q = 1.0 cfs
The equation shown on Figure 7-4 can also be used.

7.4.4 Drainage Structures

This section will discuss the various types of inlets in use and recommend guidelines on the use of each type.

Inlets used for the drainage of highway surfaces can be divided into four major classes. These classes are: grate inlets, curb opening inlets, combinations inlets, and slotted drain inlets. Figure 7-6, Inlet Types, shows these drainage inlets, Figure 7-7 shows slotted drains.

7.4.4.1 Grate Inlets

These inlets consist of an opening in the gutter covered by one or more grates. They are best suited for use on continuous grades. Since they are susceptible to clogging with debris, the use of standard grate inlets at sag points should be limited to minor sag point locations without debris potential. Special design (oversize) grate inlets can be utilized at major sag points if sufficient capacity is provided for clogging. In this case, flanking inlets are definitely recommended. Grates should be bicycle safe where bike traffic is anticipated, and structurally designed to handle the appropriate loads when subject to traffic.

7.4.4.2 Curb Opening Inlets

These inlets are vertical openings in the curb covered by a top slab. They are best suited for use at sag points since they can convey large quantities of water and debris. They are a viable alternative to grates in many locations where grates would be hazardous for pedestrians or bicyclists. They are generally not recommended for use on steep continuous grades.

7.4.4.3 Combination Inlets

Various types of combination inlets are in use. Curb opening and grate combinations are common, some with the curb opening upstream of the grate, and some with the curb opening adjacent to the grate. Slotted inlets are also used in combination with grates, located either longitudinally upstream of the grate or transversely adjacent to the grate. Engineering judgment is necessary to determine if the total capacity of the inlet is the sum of the individual components or a portion of each. The gutter grade, cross slope, and proximity of the inlets to each other will be deciding factors. Combination inlets may be desirable in sags because they can provide additional capacity in the event of plugging.

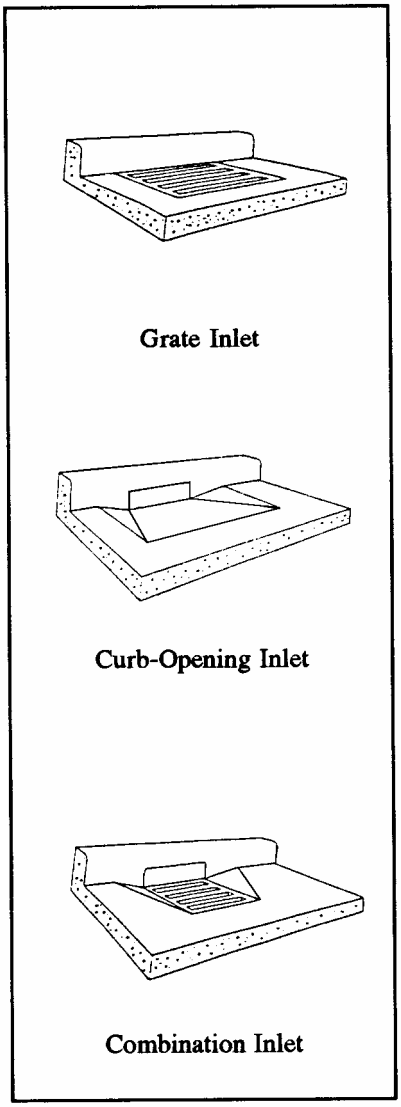

Figure 7-6 Inlet Types

7.4.4.4 Slotted Drain Inlets

MDOT does not generally recommend the use of slotted drain inlets because they require high maintenance, clog frequently, and are only useful where slopes are very flat. These inlets consist of a slotted opening with bars perpendicular to the opening. Slotted inlets function as weirs with flow entering from the side. They can be used to intercept sheet flow, collect gutter flow with or without curbs, modify existing systems to accommodate roadway widening or increased runoff, and reduce ponding depth and spread at grate inlets. The two types of slotted inlets in general use are the vertical riser type and the vane type. See Figure 7-7, Slotted Inlet.

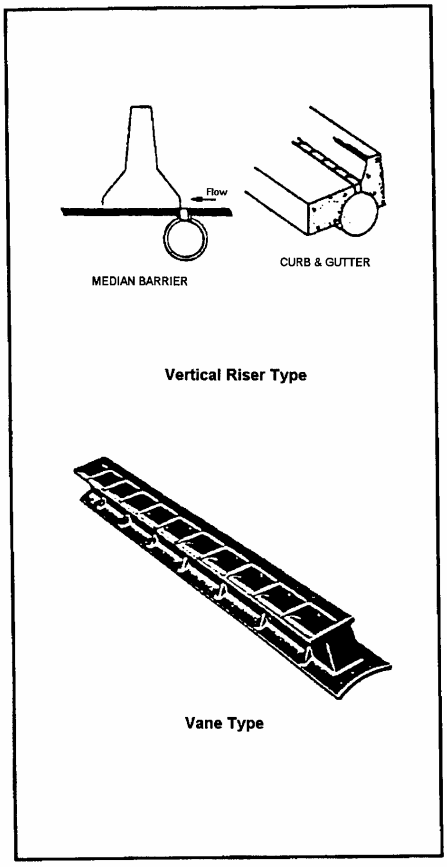

Figure 7-7 Slotted Inlet

7.4.5 Inlet Locations

Inlets are required at locations needed to collect runoff within the design controls specified in the design criteria (Section 7.3.10). In addition, there are a number of locations where inlets may be necessary with little regard to contributing drainage area. These locations should be marked on the plans prior to any computations regarding discharge, water spread, inlet capacity, or carryover.

The following are some other considerations for choosing inlet locations:

- Inlets should be placed at all low points in gutter grades.
- Inlets should be placed at points either side of the low point that are 0.2 foot higher than the low point, or a maximum of 75 feet either side of the low point. Other alternatives, such as slotted drains, may be considered in lieu of additional catch basins. This applies in long sags.
- Inlets should be placed upslope of driveways (or entrances), where possible.
- For concrete pavements, catch basins should not be placed at spring points of street intersections as they interfere with the construction of the expansion joint at that location. They should be placed 10 feet either side of the spring line, or at the midpoint of the arc if detailed grades indicate that location as the low spot in the grade. Water should be intercepted before it crosses any areas used by pedestrians, especially in commercial or business areas.
- Inlets should be placed on both sides of cross streets that drain toward the roadway. Water should never be carried across intersections in valley gutters or troughs.
- Inlets should be placed behind shoulders or back of sidewalks to drain low spots.
- Inlets should be placed on the low side of super-elevated or tilted pavement sections.
- Provide a sufficient number of catch basins in the transition to super-elevated sections to prevent gutter flow from crossing the pavement.
- Inlets should be placed at any location where there will be a heavy concentration of water. The designer may reference the maximum spacing guidelines shown in FHWA's *Urban Drainage Design Manual*, HEC-22.
- The use of 24-inch-diameter catch basins should be limited to upstream ends of sewer runs where the run to the next drainage structure is 65 feet or less, and where the structure depth does not exceed 8 feet. Use 48-inch-diameter drainage structures for catch basins in all other locations.
- Do not locate drainage structures in line with a sidewalk ramp. Except where existing structures are being used, the location of the ramp takes precedence over the location of the drainage structures. Grades may need to be adjusted to accomplish this.

- Where flat grades or multi-lanes occur, consider placing a larger cover, such as a Cover V, or double catch basins.
- Inlets should not be located in paths where pedestrians are likely to walk.

7.4.6 Inlet Spacing

7.4.6.1 General

A number of inlets are required to collect runoff at locations with little regard for contributing drainage area, and these inlets should be plotted on the plan first. Start by locating inlets from the crest and working down grade to the sag points. The location of the first inlet from the crest can be found by determining the length of pavement and the area back of the curb sloping toward the roadway, which will generate the design runoff. The design runoff can be computed as the maximum allowable flow in the curbed channel, which will meet the design criteria as specified in Section 7.3.10. Where the contributing drainage area consists of a strip of land parallel to and including a portion of the highway, the first inlet can be calculated as follows:

$$\mathbf{L = (3600 \times Q_t)/[CW\ (i/12)]} \qquad \textbf{(7.3)}$$

Where: L = distance from the crest, feet
Q_t = maximum allowable flow, cfs
C = composite runoff coefficient for contributing drainage area
W = width of contributing drainage area, feet
i = rainfall intensity for design frequency, inch/hour

If the drainage area contributing to the first inlet from the crest is irregular in shape, trial and error will be necessary to match a design flow with the maximum allowable flow. The maximum spacing allowed is 300 feet between crest and inlet or between inlets.

To space successive down-grade inlets, it is necessary to compute the amount of flow which will be intercepted by the inlet (Q_i) and subtract it from the total gutter flow to compute the carryover. The carryover from the first inlet is added to the computed flow to the second inlet, the total of which must not exceed the maximum allowable flow dictated by the criteria. Table 7-3 is an inlet spacing computation sheet which can be utilized to record the spacing calculations.

7.4.6.2 Grate Inlets on Grade

The capacity of a grate inlet depends on its geometry, cross slope, longitudinal slope, total gutter flow, depth of flow, and pavement roughness. The depth of water next to the curb is the major factor in the interception capacity of both gutter inlets and curb opening inlets. At low velocities, all the water flowing in the section of gutter occupied by the grate, called frontal flow, is intercepted by grate inlets, and a small portion of the flow along the length of the grate, termed side flow, is intercepted. On steep slopes, a portion of the frontal flow may tend to splash over the end of the grate for some grates. Figure 7-9, Grate Inlet Frontal Flow Interception Efficiency, can be utilized to determine splash-over velocities for various grate configurations and the portion of frontal flow intercepted by the grate. Note that the parallel bar grates are the most efficient grates on steep slopes but are not bicycle safe.

Inlet interception capacity has been investigated by the FHWA. The grates tested in an FHWA research study are described in *Urban Drainage Design Manual*, HEC-22. The FHWA has developed computer software, which will analyze the flow in gutters and the interception capacity of grate inlets, curb opening inlets, slotted drain inlets, and combination inlets on continuous grades. Both uniform and composite cross slopes can be analyzed. In addition, the program can analyze curb openings, slotted drains, and grate inlets in a sag. Enhanced versions by private vendors have made the program more user friendly and improved its usefulness. Inlet capacity needs to be known in order to determine spread and impact on the traveling public.

The ratio of frontal flow to total gutter flow, E_o, for straight cross slope is given by the following equation:

$$\mathbf{E_o = Q_w/Q = 1 - (1 - W/T)^{2.67}} \qquad \textbf{(7.4)}$$

Where: Q = total gutter flow, cfs
Q_w = flow in width W, cfs
W = distance from front of curb to outermost opening of grate, feet
T = total spread of water in the gutter, feet

Figure 7-3 provides a graphical solution of E_o for either straight cross slopes or depressed gutter sections.

The ratio of side flow, Q_s, to total gutter flow is:

$$\mathbf{Q_s/Q = 1 - Q_w/Q = 1 - E_o} \qquad \textbf{(7.5)}$$

The ratio of frontal flow intercepted to total frontal flow, R_f, is expressed by the following equation:

$$\mathbf{R_f = 1 - 0.09\ (V - V_0)} \qquad \mathbf{(7.6)}$$

Where: V = velocity of flow in the gutter, fps
V_o = gutter velocity where splash-over first occurs, fps

This ratio is equivalent to frontal flow interception efficiency. Figure 7-9, Grate Inlet Frontal Flow Interception Efficiency, provides a solution to Equation 7.6 which takes into account grate length, bar configuration, and gutter velocity at which splash-over occurs. The gutter velocity needed to use Figure 7-9, Grate Inlet Frontal Flow Interception Efficiency, is total gutter flow divided by the area of flow.

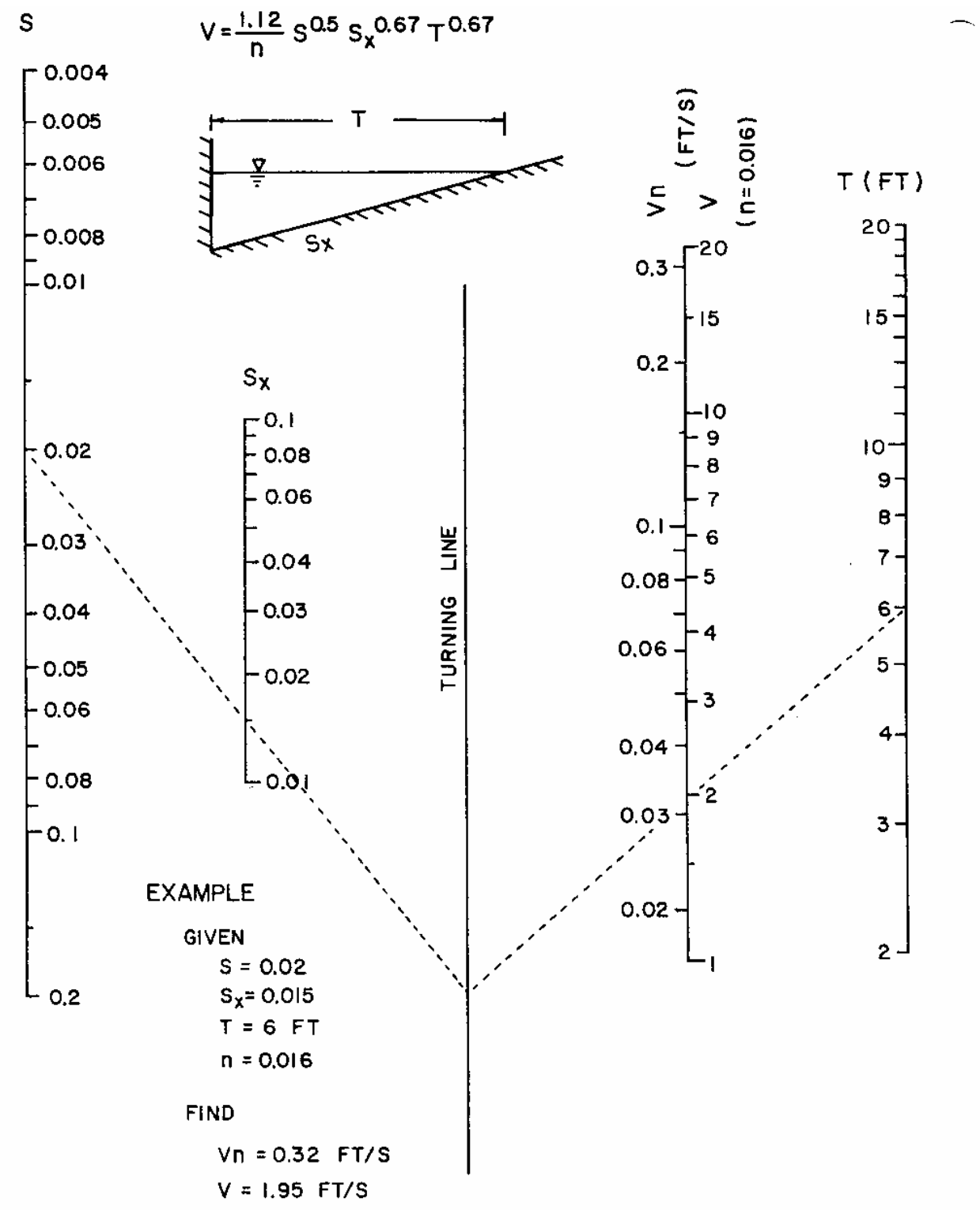

Figure 7-8 Velocity in Triangular Gutter Sections

Source: HEC-12

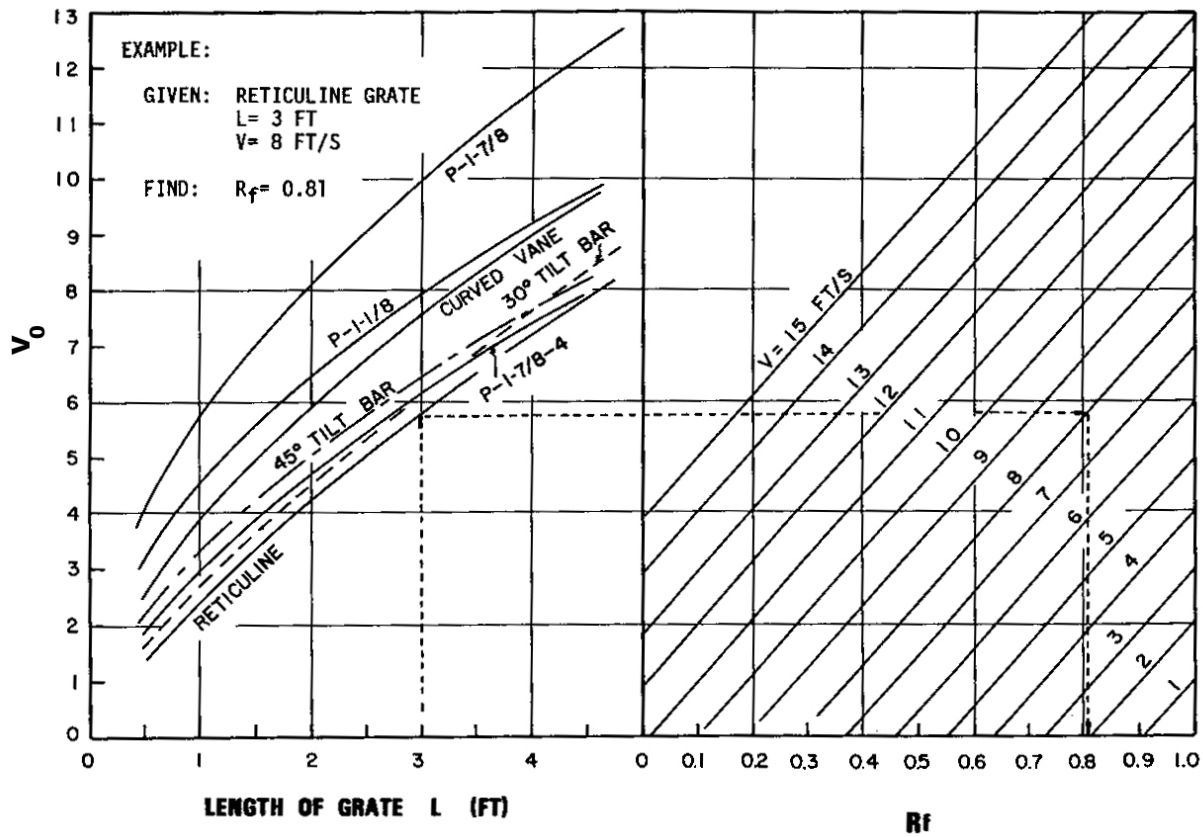

Figure 7-9 Grate Inlet Frontal Flow Interception Efficiency

Note: For assistance with comparable MDOT grates, contact the Design Engineer - Hydraulics/Hydrology.

Source: HEC-12

Figure 7-8, Velocity in Triangular Gutter Sections, is a nomograph to solve for velocity in a triangular gutter section with known cross slope, longitudinal slope, and spread.

The ratio of side flow intercepted to total side flow, R_s, or side flow interception efficiency, is expressed by:

$$R_s = 1 / [1 + (0.0828V^{1.8}/S_xL^{2.3})] \quad (7.7)$$

Where: V = velocity of flow in gutter, fps
L = length of the grate, feet
S_x = cross slope, feet/foot

Figure 7-9 provides a solution to Equation 7.7.

The efficiency, E, of a grate is expressed as:

$$E = R_fE_o + R_s(1 - E_o) \quad (7.8)$$

The interception capacity of a grate inlet on grade is equal to the efficiency of the grate multiplied by the total gutter flow:

$$Q_i = EQ = Q[R_fE_o + R_s(1 - E_o)] \quad (7.9)$$

<u>Example Problem</u>

Given: Drainage area: 200 feet residential strip, C = 0.4, S = 0.05 feet/foot
12.0 feet lane at 0.015 feet/foot, 8.0 feet shoulder at 0.04 feet/foot and 2.0 feet gutter at 0.06 feet/foot
10-year design
Allowable spread T = 8.0 feet, n = 0.016
S_o = 0.01, S_x = 0.04, S_w = 0.06
Use Curves and Nomographs

Find: Maximum allowable flow Q_T

Q_i intercepted by 2.0 feet x 2.0 feet vane grate
Q_r carryover
Location of first and second inlets from crest of hill, see Figure 7-10, Sketch of Spread.

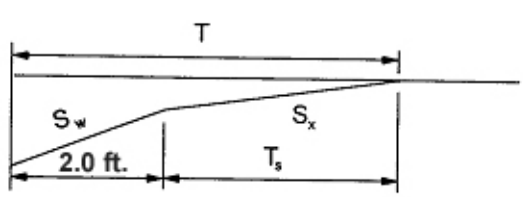

Figure 7-10 Sketch of Spread

Solution:

1. Solve for Q_s using Figure 7-2
   T_s = 8.0 feet, S_x = 0.04 feet/foot, Q_s = 3.88 cfs

2. Use Figure 7-3 to find E_o
   S_w/S_x = 0.06/0.04 = 1.5, W/T = 2/8 = 0.25, E_o = 0.55 = Q_w/Q

3. Find total Q_T (maximum allowable flow)
   $Q_T = Q_s/(1-E_o)$ = 3.88/(1 - 0.55) = <u>8.6 cfs</u>

4. From Figure 7-8, V = 3.3 fps

5. From Figure 7-9, R_f = 1.0; from Figure 7-11, R_s = 0.16

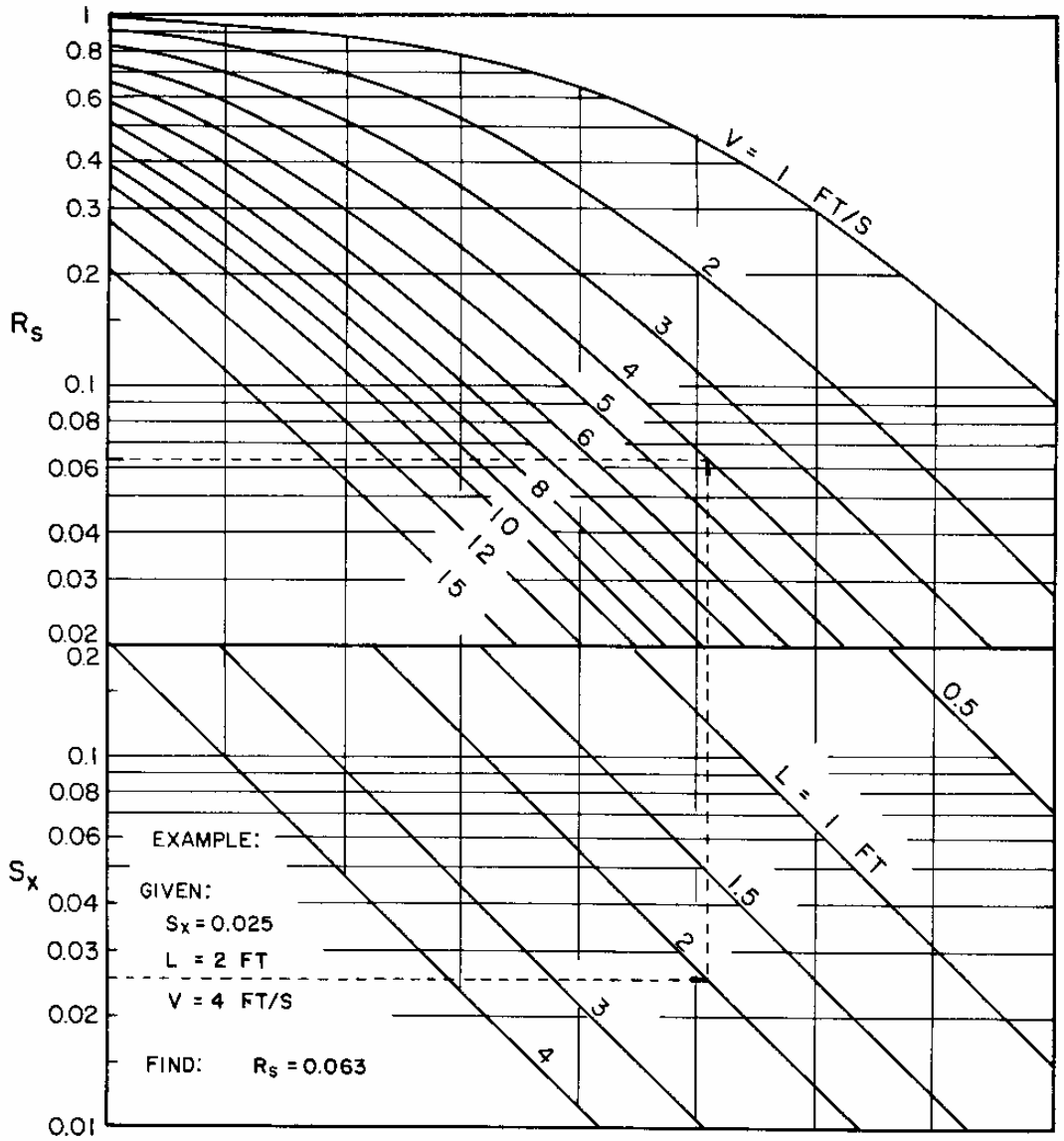

Figure 7-11 Grate Inlet Side Flow Interception Efficiency

Source: HEC-12

6. Using Equation 7.9,

   $Q_i = Q_T [R_f E_o + R_s (1-E_o)]$
   $Q_i = 8.6[(1.0 \times 0.55) + 0.16(1 - 0.55)] =$ <u>5.3 cfs</u>
7. $Q_r = Q_T - Q_i$
   $Q_r = 8.6 - 5.3 =$ <u>3.3 cfs</u>

8. Locate first inlet from crest.
   Using Equation 7.7,

   $L = Q_t / [(2.31 \times 10^{-5}) \times CiW]$

   Where: L = distance from the crest, feet
   Q_t = maximum allowable flow, cfs
   C = composite runoff coefficient for contributing drainage area
   W = width of contributing drainage area, feet
   I = rainfall intensity for design frequency, inch/hour

   To find I, first solve for t_c; from Rainfall Intensity Tables in Chapter 3, Hydrology, Appendix 3-B.

   C = 0.4, S = 0.5 percent, overland flow t_c = 22 min.
   Gutter flow estimated at V = 3.3 fps, from Figure 7-8
   Try 300 feet t_c = 300/(3.3 x 60) = 1.52 min.; Total t_c = 15 + 1.52 = 16.52 min.
   From Rainfall Intensity Tables, I = 3.0 inch/hour
   Solve for weighted C value: C = [(200 x 0.4) + (22 x 0.9)]/222 = 0.450
   $L = 8.6/(2.31 \times 10^{-5} \times 0.450 \times 3.0 \times 222) = 1{,}240$ feet OK
   <u>Inlets should be placed at the maximum length of 300 feet from crest.</u>

9. To locate second inlet:

   Q_T = 8.6 cfs, Q_r = 3.3 cfs, $Q_{allowable}$ = 8.6 - 3.3 = 5.3 cfs
   Assuming similar drainage area and t_c, I = 3.0 inch/hour
   $L = 5.3/(2.31 \times 10^{-5} \times 0.454 \times 3.0 \times 224) = 750$ feet
   <u>Place second inlet 300 feet from first inlet.</u>

7.4.6.3 Grate Inlets in Sag

Although curb opening inlets are generally preferred to grate inlets at a sag, grate inlets can be used successfully. For minor sag points where debris potential is limited, grate inlets without a curb opening inlet can be utilized. An example of a minor sag point might be on a ramp as it joins a mainline. Curb opening inlets, in addition to a grate, are preferred at sag points where debris is likely, such as on a city street. For major sag points, such as on

divided high speed highways, a curb opening inlet is preferable to a grate inlet because of its hydraulic capacity and debris handling capabilities.

Where significant ponding can occur, in locations such as underpasses and in sag vertical curves in depressed sections, it is good engineering practice to place a minimum of one additional inlet on each side of the sag point inlet. The additional inlets should be placed so they will limit spread on low gradient approaches to the low point and act in relief of the inlet at the low point if it should become clogged or if the allowable spread is exceeded.

A grate inlet in a sag operates as a weir up to a depth of about 0.4 foot and as an orifice for depths greater than 1.4 feet. Between these depths, a transition from weir to orifice flow occurs. The capacity of a grate inlet operating as a weir is:

$$\mathbf{Q_i = CPd^{1.5}} \qquad \textbf{(7.10)}$$

Where: P = perimeter of grate excluding side against curb, feet
C = 1.66
d = depth of water at curb measured from the normal cross slope gutter flow line, feet

The capacity of a grate inlet operating as an orifice is:

$$\mathbf{Q_i = CA\,(2gd)^{0.5}} \qquad \textbf{(7.11)}$$

Where: C = 0.67 orifice coefficient
A = clear opening area of the grate, sf
g = 32.2 feet/s^2

The effects of grate size on the depth at which a grate operates as an orifice is apparent from the chart. Transition from weir to orifice flow results in interception capacity less than that computed by either weir or the orifice equation. This capacity can be approximated by drawing in a curve between the lines, representing the perimeter and net area of the grate to be used.

<u>Example Problem</u>

The following example illustrates the use of Figure 7-12, Grate Inlet Capacity in Sump (Sag) Conditions.

Given: A symmetrical sag vertical curve with equal bypass from inlets upgrade of the low point; allow for 50 percent clogging of the grate.

Q_r = 3.5 cfs	Q = 8.1 cfs, design storm
Q_r = 4.2 cfs	Q = 10.9 cfs, check storm
S_x = 0.05 feet/foot	T = 10.0 feet design
d = TS_x = 0.5 foot	n = 0.016

Find: Grate size for design Q and depth at curb for check Q. Check spread at S = 0.003 on approaches to the low point.

Solution:

From Figure 7-12, a grate must have a perimeter of 7.87 feet to intercept 8.1 cfs at a depth of 0.5 foot. Some assumptions must be made regarding the nature of the clogging in order to compute the capacity of a partially clogged grate. If the area of a grate is 50 percent covered by debris, so that the debris-covered portion does not contribute to interception, the effective perimeter will be reduced by a lesser amount than 50 percent. For example, if a 2-foot x 4-foot grate is clogged so that the effective width is 1.0 foot, then the perimeter, P = 1.0 + 4.0 + 1.0 = 6.0 feet, rather than 7.87 feet. The area of the opening would be reduced by 50 percent and the perimeter by 25 percent. Therefore, assuming 50 percent clogging along the length of the grate, a 4.0 x 4.0, a 2.0 x 6.0, or a 3.0 x 5.0 grate would meet requirements of a 7.87 feet perimeter 50 percent clogged.

Assuming that the installation chosen to meet design conditions is a double 2.0 feet x 3.0 feet grate, for 50 percent clogged conditions:

P = 1.0 + 6.0 + 1.0 = 8.0

For design flow: d = 0.5 foot (from Figure 7-12)

For check flow: d = 0.6 foot (from Figure 7-12, T = 12.0 feet)

At the check flow rate, ponding will extend 2.0 feet into a traffic lane if the grate is 50 percent clogged in the manner assumed.

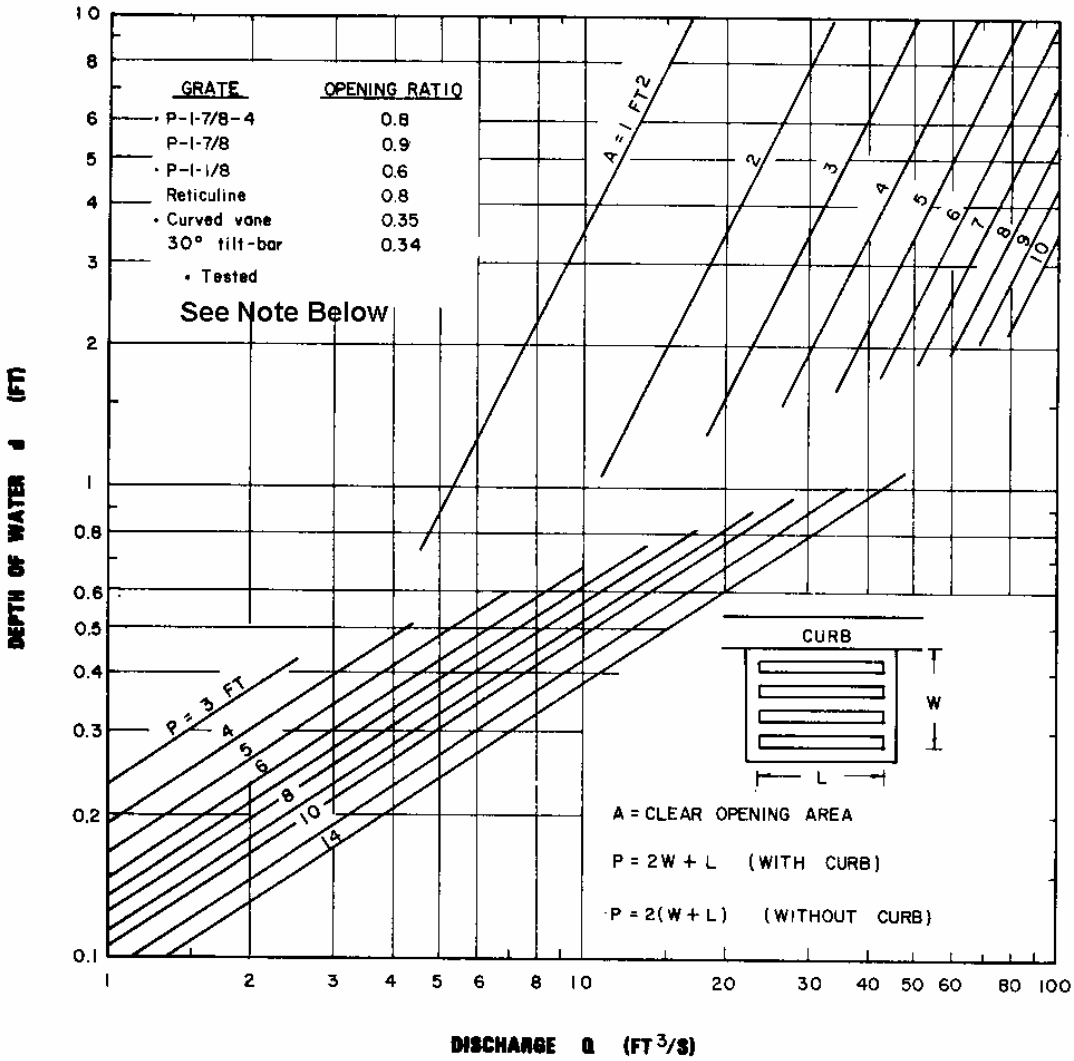

Figure 7-12 Grate Inlet Capacity in Sump (Sag) Conditions

Note: For assistance choosing comparable MDOT grates, contact the Design Engineer - Hydraulics/Hydrology.

Source: HEC-12

AASHTO geometric policy recommends a gradient of 0.3 percent within 50 feet of the level point in a sag vertical curve.

Check T at S = 0.003 for the design and check flow:
Q = 3.5 cfs, T = 8.2 feet (design storm) Figure 7-2.
Q = 4.2 cfs, T = 8.8 feet (check storm) Figure 7-2.

Thus, a double 2-foot x 3-foot grate, 50 percent clogged is adequate to intercept the design flow at a spread which does not exceed design spread, and spread on the approaches to the low point will not exceed design spread. However, the tendency of grate inlets to clog completely warrants consideration of a combination inlet, or curb opening inlet, in a sag where ponding can occur, and supplemental inlets on the low gradient approaches.

7.4.6.4 Curb Opening Inlets on Grade

Curb opening inlets are effective in the drainage of highway pavements where flow depth at the curb is sufficient for the inlet to perform efficiently. Curb opening inlets are relatively free of clogging tendencies and offer little interference to traffic operation. They are a viable alternative to grates in many locations where grates would be in traffic lanes or would be hazardous for pedestrians or bicyclists. Curb opening inlets are shown in MDOT Standard Plans as Cover J in the R-14 series, Cover K in the R-16 series, and Cover K in the R-15 series and R-30 series.

The length of curb opening inlet required for total interception of gutter flow on a pavement section with a straight cross slope is expressed by:

$$L_T = KQ^{0.42}S^{0.3}(1/nS_x)^{0.6} \qquad (7.12)$$

Where: K = 0.6

L_T = curb opening length required to intercept 100 percent of the gutter flow, feet.

The efficiency of curb opening inlets shorter than the length required for total interception is expressed by:

$$E = 1 - (1 - L/L_T)^{1.8} \qquad (7.13)$$

Where: L = curb opening length, feet.

Figure 7-13, Curb Opening and Longitudinal Slotted Drain, is a nomograph for the solution of Equation 7.12, and Figure 7-14, Curb Opening and Slotted Drain Inlet Interception Efficiency, provides a solution of Equation 7.13.

The length of inlet required for total interception by depressed curb opening inlets or curb openings in depressed gutter sections can be found by the use of an equivalent cross slope, S_e, in Equation 7.12.

$$\mathbf{S_e = S_x + S'_w E_o} \qquad \mathbf{(7.14)}$$

Where: S'_w = cross slope of the gutter measured from the cross slope of the pavement
S'_w = (a/12W), feet/foot
a = gutter depression, inch
E_0 = ratio of flow in the depressed section to total gutter flow. It is determined by the gutter configuration upstream of the inlet.

Note: S_e can be used to calculate the length of curb opening by substituting S_e for S_x in Equation 7.12.

Example Problem

The following example illustrates the use of this procedure.

Given: S_x = 0.03 feet/foot S = 0.035 feet/foot n = 0.016 Q = 4.94 cfs

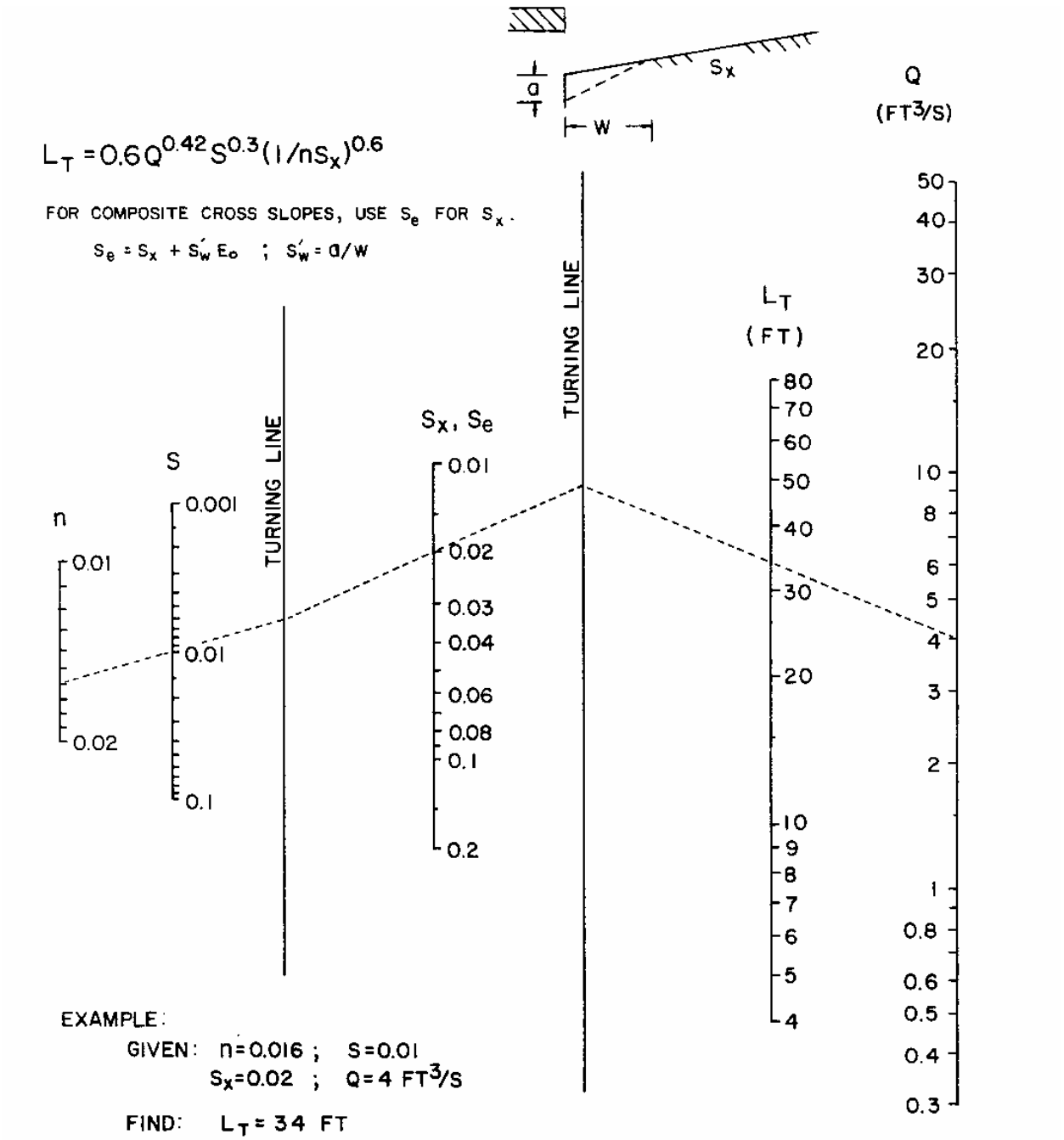

Figure 7-13 Curb Opening and Longitudinal Slotted Drain Inlet Length for Total Interception

Source: HEC-12

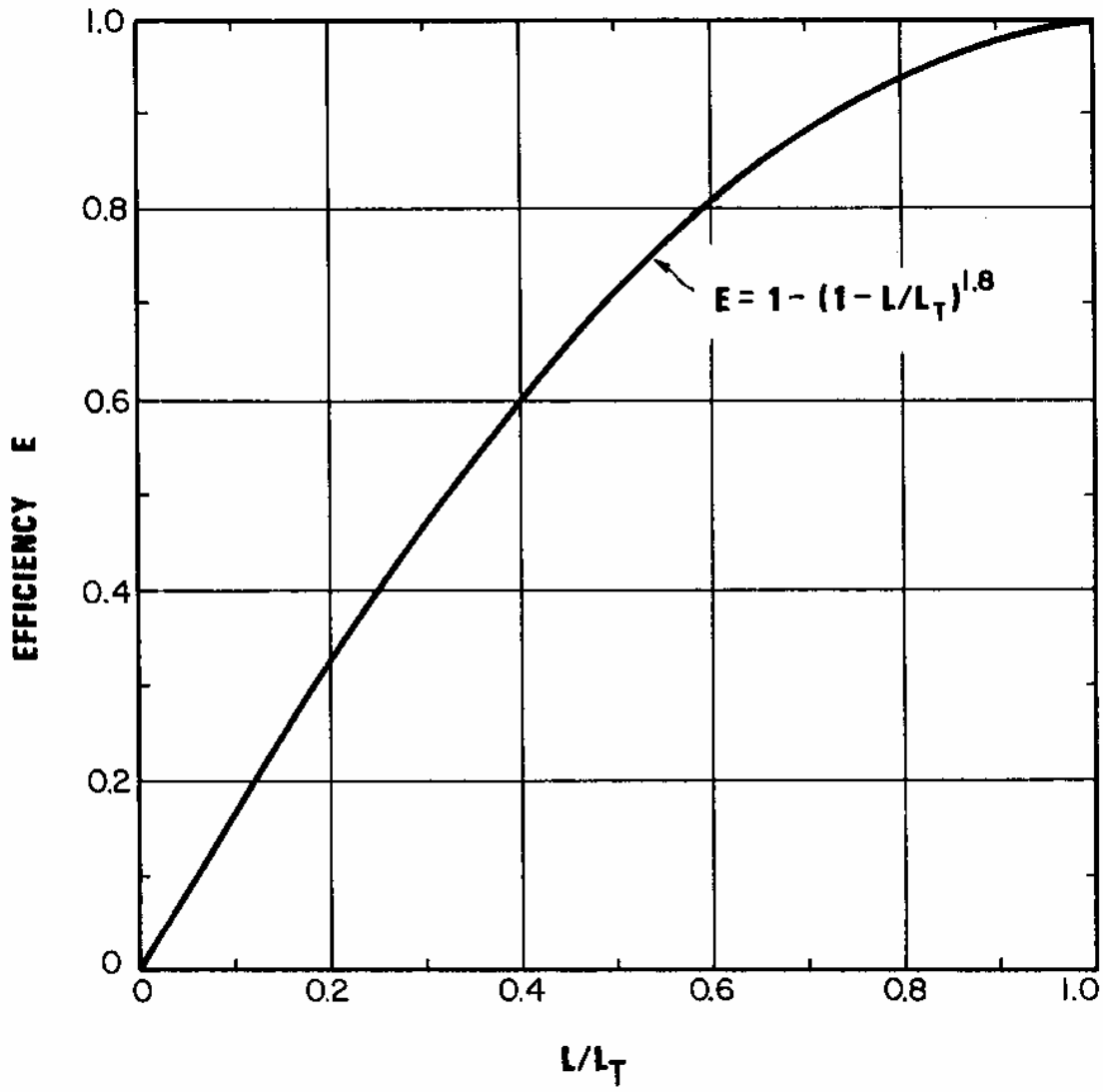

Figure 7-14 Curb Opening and Slotted Drain Inlet Interception Efficiency

Source: HEC-1

Find: (1) Q_i for 10.0 feet curb opening inlet, uniform cross slope
(2) Q_i for a depressed 10.0 feet curb opening inlet with composite cross slope, a = 2 inches W = 2.0 feet
(3) Q_i for a depressed 10.0 feet curb opening inlet with uniform cross slope

Solution:

1. From Figure 7-2, T = 7.87 feet
From Figure 7-13, L_T = 42 feet
L/L_T = 10.0/42.0 = 0.23
From Figure 7-14, E = 0.35
Q_i = EQ = 0.35 x 4.9 = 1.73 cfs

2. Qn = 4.9 x 0.016 = 0.078 cfs
S_w/S_x = (0.03 + 0.083)/0.03 = 3.77
From Figure 7-4, T/W = 3.5 and T = 7.0 feet
Then W/T (Depress) = 2.0/7.0 = 0.29
From Figure 7-3, E_o = 0.74
$S_e = S_x + S'_wE_0$ = 0.03 + 0.083(0.74) = 0.09
From Figure 7-13, L_T = 20.8 feet, then L/L_T = 10.0/20.8 = 0.48
From Figure 7-14, E = 0.69, then Q_i = 0.69 x 4.9 = 3.38 cfs

3. S_w / S_x = 0.03 /0.03 = 1
W/T = 2.0/7.87 = 0.25
From Figure 7-3, E_o = 0.53
S_e = 0.03 + (0.085)(0.53) = 0.075
From Figure 7-13, L_T = 25 feet, then L/L_T = 10/25 = 0.4
From Figure 7-14, E = 0.60, then Q_i = 0.6 x 4.9 = 2.94 cfs

7.4.6.5 Curb Inlets In Sag

The capacity of a curb opening inlet in a sag depends on water depth at the curb, the curb opening length, and the height of the curb opening. The inlet operates as a weir to depths equal to the curb opening height and as an orifice at depths greater than 1.4 times the opening height. At depths between 1.0 and 1.4 times the opening height, flow is in a transition stage. This type of inlet is shown in MDOT Standard Plans as Cover J.

The equation for the interception capacity of a depressed curb opening inlet operating as a weir is:

$$\mathbf{Q_i = C_w(L + 1.8\ W)d^{1.5}} \qquad \textbf{(7.15)}$$

Where: C_w = 2.3
L = length of curb opening, feet
W = width of depression, feet
d = depth of water at curb measured from the normal cross slope gutter flow line, feet

See Figure 7-15 for a definition sketch.

The weir equation for curb opening inlets without depression becomes:

$$Q_i = C_w L d^{1.5}$$

The depth limitation for operation as a weir becomes $d \leq h$.

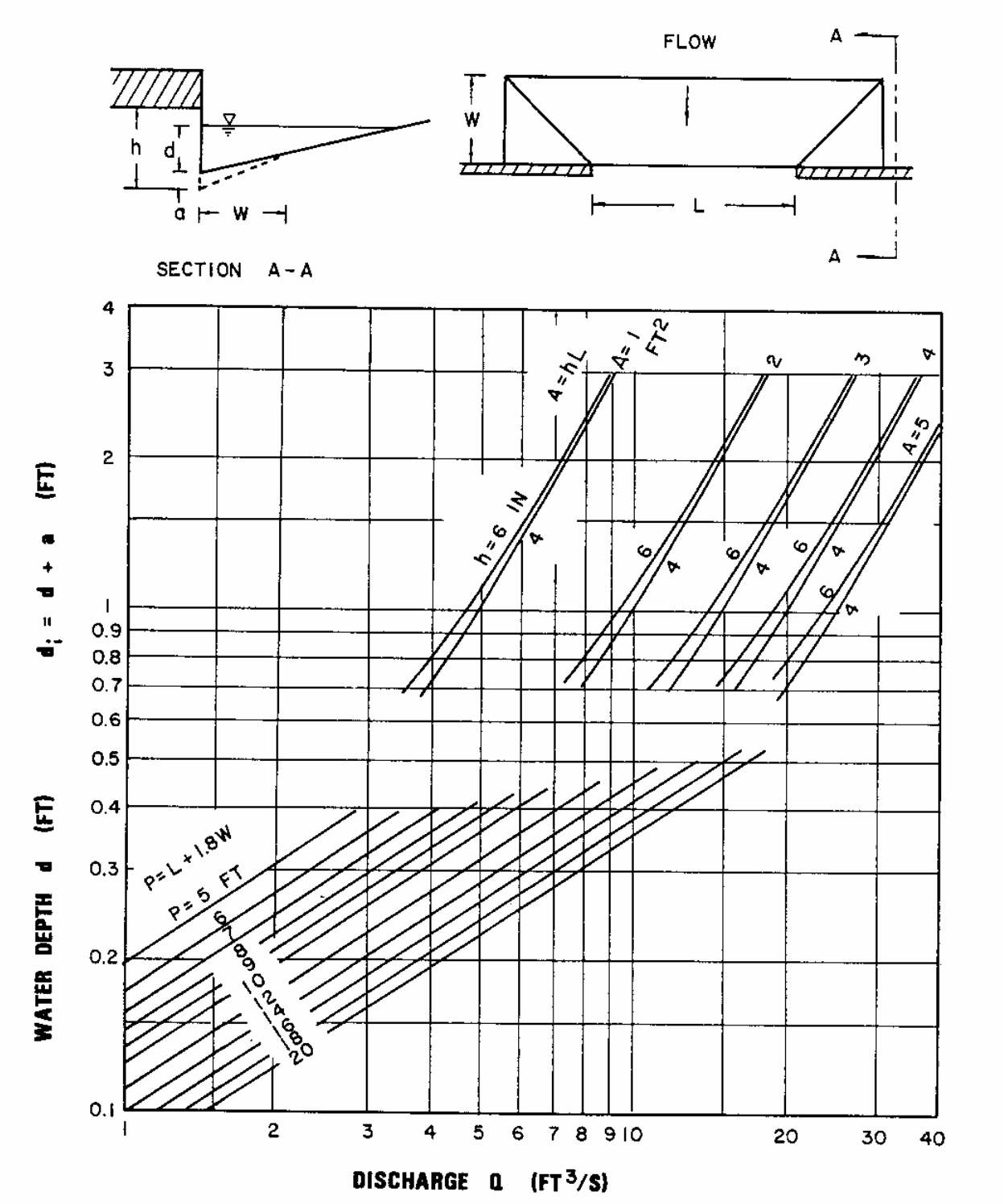

Figure 7-15 Depressed Curb Opening Inlet Capacity in Sag Locations

Source: HEC-12

Curb opening inlets operate as orifices at depths greater than approximately 1.4 x height of curb opening. The interception capacity can be computed by:

$$\mathbf{Q_i = C_o\, A[2g(d_i - h/2)]^{0.5}} \qquad \textbf{(7.16)}$$

Where: C_o = orifice coefficient (0.67)
h = height of curb opening orifice, feet
A = clear area of opening, sf
d_i = depth at lip of curb opening, feet

Note: Equation 7.16 is applicable to depressed and undepressed curb opening inlets, and the depth at the inlet includes any gutter depression.

<u>Example Problem</u>

The following example illustrates the use of this procedure.

Given: Curb opening inlet in a sump location

L = 4.92 feet h = 0.43 feet

1. Undepressed curb opening

   S_x = 0.05 T = 7.87 feet

2. Depressed curb opening

   S_x = 0.05 W = 2.0 feet
   a = 2 inches T = 7.87 feet

Find: Q_i

Solution:

1. d = TS_x = 7.87 x 0.05 = 0.4 feet < h; therefore, weir controls
   Q_i = C_W L $d^{1.5}$ = 0.67 x 4.92 x $0.4^{1.5}$ = 0.83 cfs

2. d = 0.4 feet < [(1.4 h) = 1.4 x 0.43 = 0.60]; therefore, weir controls
   P = L + 1.8W = 4.92 + 1.8(2.0) = 8.5 feet
   Q_i = 0.67 x 8.5 x $0.4^{1.5}$ = 1.44 cfs (Figure 7-15)

At d = 0.4 foot, the depressed curb opening inlet has about 70 percent more capacity than an inlet without depression. In practice, the flow rate would be known and the depth at the curb would be unknown.

7.4.6.6 Supplemental Inlets

At major sag points where significant ponding may occur, such as underpasses or sag vertical curves in depressed sections, it is recommended practice to place a minimum of one supplemental (flanking) inlet on each side of the inlet at the sag point. The supplemental inlets should be placed to act in relief of the sag inlet if it should become clogged. Table 7-2 shows the spacing required for various depths at curb criteria and vertical curve lengths defined by K = L/A, where L is the length of the vertical curve in feet and A is the algebraic difference in approach grades. The AASHTO policy on geometrics specifies maximum K values for various design speeds, and a maximum K of 167 considering drainage. See Figure 7-16, Location of Supplemental and Sag Inlets, for problem sketch.

<u>Example Problem</u>

Given: K = 130 feet/percent, S_x = 0.04, allowable spread is 10.0 feet

Find: Location of supplemental inlets that will function in relief of the inlet at the low point when the inlet at the low point is clogged.

Solution:

1. Depth over supplemental inlet to carry one-half of the design flow equals 0.63 (0.4 foot) = 0.25 foot.

2. Depth from bottom of sag to flanking inlet: 0.4 foot - 0.25 foot = 0.15 foot.

3. Spacing of supplemental inlet = 61 feet (from Table 7-2, using d = 0.15 foot).

Table 7-2 Supplemental Inlet Locations

Distance to Supplemental Inlet in Sag Vertical Curve Locations using Depth at Curb Criteria (feet)												
d↓ K→	20	30	40	49	70	90	110	130	160	170	180	220
0.10	19.8	24.2	28.1	31.1	37.1	42.1	46.5	50.6	56.1	57.8	59.5	65.8
0.20	28.1	34.3	39.7	44.0	52.4	59.5	65.8	71.5	79.4	81.8	84.2	93.1
0.30	34.4	42.0	48.6	53.9	64.2	72.8	80.5	87.6	97.2	100.2	103.1	114.0
0.40	40.0	48.9	56.6	62.7	74.8	84.8	93.8	101.9	113.2	116.6	120.0	132.7
0.50	44.7	54.6	63.3	70.1	83.6	94.8	104.8	114.0	126.5	130.4	134.2	148.4
0.60	49.0	59.8	69.3	76.8	91.6	103.8	114.8	124.8	138.6	142.8	147.0	162.5
0.70	52.9	64.6	74.8	83.0	98.9	112.2	124.0	134.8	149.7	154.3	158.8	175.5
0.80	56.6	69.1	80.0	88.7	105.7	119.9	132.6	144.2	160.0	164.9	169.7	187.7

NOTES:
1. $x = (200dK)^{0.5}$, where x = distance from the low point (feet).
2. Drainage maximum K = 51 feet/percent.
3. d = depth at curb (feet).

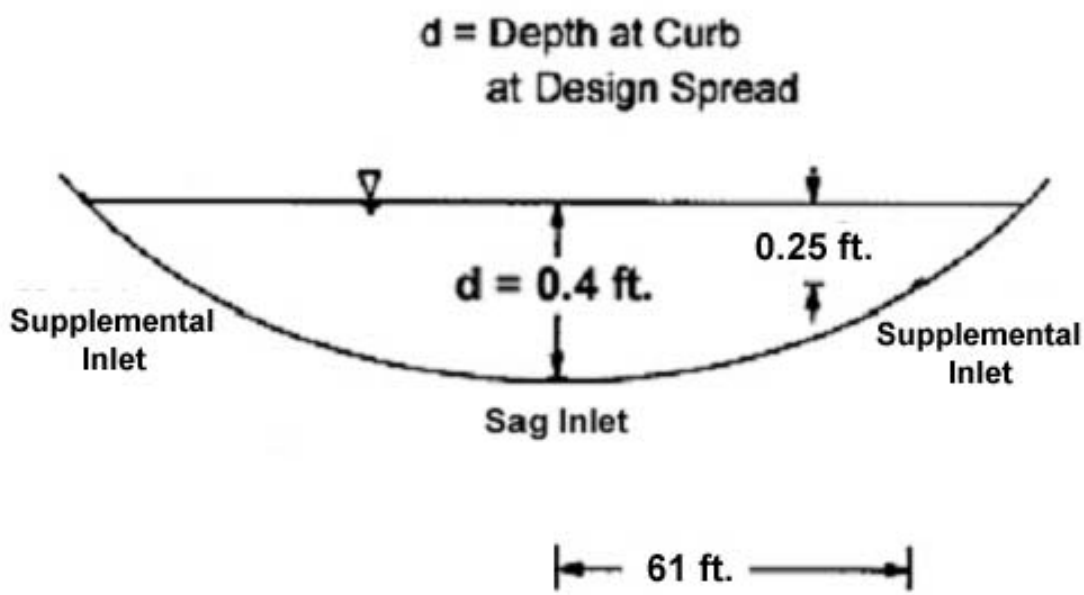

Figure 7-16 Location of Supplemental and Sag Inlets

7.4.6.7 Inlet Spacing Computations

In order to design the location of the inlets for a given project, information such as a layout or plan sheet suitable for outlining drainage areas, road profiles, typical cross sections, grading cross sections, super-elevation diagrams, and contour maps, are necessary. The inlet computation sheet, Table 7-5, should be used to document the computations. A step-by-step procedure is as follows:

Step 1 Complete the blanks on top of the sheet to identify the date, route, job number, control section, designer initials, and checker initials.

Step 2 Mark on the plan the location of inlets which are necessary even without considering any specific drainage area. See Section 7.4.5, Inlet Locations, for additional information.

Step 3 Start at one end of the job, at one high point and work towards the low point, then space from the other high point back to the same low point.

Step 4 Select a trial drainage area approximately 300 to 500 feet below the high point and outline the area including any area that may come over the curb. (Use drainage area maps.) Where practical, large areas of behind the curb drainage should be intercepted before it reaches the highway.

Step 5

Col. 1 Describe the location of the proposed inlet by number and station in Col. 1 and Col. 2. Identify the Col. 5 curb and gutter type in the Remarks Col. 19. A sketch of the cross section should be provided in the open area of the computation sheet.

Step 6

Col. 3 Compute the drainage area and enter in Col. 3.

Step 7

Col. 4 Select a C value from one of the tables in Chapter 3, Hydrology, or compute a weighted value based on area and cover type and enter in Col. 4.

Step 8

Col. 5 Compute a time of concentration for the first inlet. This will be the travel time from the hydraulically most remote point in the drainage area to the inlet. See additional discussion in Chapter 3, Hydrology. The minimum time of concentration should be 15 minutes (10 minutes for Sag). Enter value in Col. 5.

Step 9

Col. 6 Using the Rainfall Frequency tables (Chapter 3, Hydrology, Appendix 3-B), select a rainfall intensity at the t_c for the design frequency. Enter in Col. 6.

Step 10

Col. 7 Calculate Q by multiplying Col. 3 by Col. 4 by Col. 6. Enter in Col. 7.

Step 11

Col. 8 Determine the gutter slope at the inlet from the profile grade; check effect of super-elevation. Enter in Col. 8.

Step 12

Col. 9 Enter cross slope adjacent to inlet in Col. 9 and gutter width in Col. 13. Sketch composite.

Col. 13 Cross slope with dimensions.

Step 13

Col. 11 For the first inlet in a series (high point to low point), enter Col. 7 in Col. 11 since no previous carryover has occurred yet.

Step 14

Col. 12 Using Figure 7-2, determine the spread T and enter in Col. 14 and calculate the depth, d, at the curb by multiplying T times the cross slope(s) and enter in Col. 12. Compare with the allowable spread as determined by the design criteria in Section 7.3. If Col. 15 is less than the curb height, and Col. 14 is near the allowable spread, continue on to Step 16. If not OK, expand or decrease the

drainage area to meet the criteria and repeat Steps 5 through 14. Continue these repetitions until Col. 14 is near the allowable spread then proceed to Step 15.

Step 15
Col. 15 Calculate W/T and enter in Col. 15.

Step 16
Col. 16 Select the inlet type and dimensions and enter in Col. 16.

Step 17
Col. 17 Calculate the Q intercepted (Q_i) by the inlet and enter in Col. 17. Utilize Figures 7-2 and 7-3, or Figure 7-4 to define the flow in the gutter. Utilize Figures 7-3, 7-7, and 7-8, and Equation 7.9 to calculate Q_i for a grate inlet and Figures 7-10 and 7-11 to calculate Q_i for a curb opening inlet. See Section 7.4.7.2 for a grate inlet example and Section 7.4.4.2 for a curb opening inlet example.

Step 18
Col. 18 Calculate the carryover by subtracting Col. 17 from Col. 11 and enter in Col. 18 and also in Col. 10 on the next line if an additional inlet exists downstream.

Step 19
Col. 1-4 Proceed to the next inlet down grade. Select an area approximately 300 to 400 feet below the first inlet as a first trial. Repeat Steps 5 through 7 considering only the area between the inlets.

Step 20
Col. 5 Compute a time of concentration for the second inlet downgrade based on the area between the two inlets.

Step 21
Col. 6 Determine the intensity based on the time of concentration determined in Step 19 and enter it in Col. 6.

Step 22
Col. 7 Determine the discharge from this area by multiplying Col. 3 by Col. 4 by Col. 6. Enter the discharge in Col. 7.

Step 23
Col. 11 Determine total gutter flow by adding Col. 7 and Col. 10, and enter in Col. 11. Col. 10 is the same as Col. 18 from the previous line.

Step 24
Col. 12 Determine "T" based on total gutter flow (Col. 11) by using Figures 7-2 or 7-4 and enter in Col. 14. (If "T" in Col. 14 exceeds the allowable spread, reduce the area and repeat Steps 19-24. If "T" in Col. 14 is substantially less than the allowable spread, increase the area and repeat Steps 19-24.)

Step 25
Col. 16 Select inlet type and dimensions and enter in Col. 16.

Step 26
Col. 17 Determine Q_i and enter in Col. 17; see instruction in Step 17.

Step 27
Col. 18 Calculate the carryover by subtracting Col. 17 from Col. 7, and enter in Col. 16. This completes the spacing design for this inlet.

Step 28 Go back to Step 19 and repeat Step 19 through Step 27 for each subsequent inlet. If the drainage area and weighted "C" values are similar between each inlet, the values from the previous grate location can be reused. If they are significantly different, re-computation will be required.

Table 7-3 Inlet Spacing Computation Sheet

INLET COMPUTATION SHEET

DATE_____ ROUTE_____JN _____CONTROL SECTION_____
COMPUTED BY_____ SHEET_____OF_____
CHECKED BY_____

LOCATION		GUTTER DISCHARGE Design Frequency _____					GUTTER DISCHARGE Allowable Spread _____								INLET DISCHARGE			REMARKS
Inlet No.	Stat.	Drain Area "A" (acres)	Runoff Coef "C"	Time of Conc. "T_C" (min.)	Rain Intensity "I" (in./hr.)	Q= CIA (cfs)	Grade "S_O" (ft./ft.)	Cross Slope S_x (ft./ft.	Prev Carryover (cfs)	Total Gutter Flow (cfs)	Depth "d" (ft.)	Gutter Width "W" (ft.)	Spread "T" (ft.)	W/T	Inlet TYPE	Intercept "Q_i" (cfs)	Carryover "Q_r" (cfs)	
1	2	3	4	5	6	7	8	9	10	11	12	13	14	15	16	17	18	19

7.4.7 Manholes

7.4.7.1 Location

General design guidance for the location and spacing of manholes to be used by MDOT designers is as follows:

- For trunk sewers 36-inch diameter and under, space approximately 300 feet apart to facilitate maintenance.
- For trunk sewers 42-inch diameter and over, space approximately 100 pipe diameters apart.
- At angles in the main sewer.
- At points where the size of the sewer changes.
- At points where the grade of the sewer changes.
- At the junction of sewer lines.
- At street intersections or other points, such as connecting lines to catch basins or inlets.
- Access manholes for sewer inspection on large tunnel sewers shall be spaced at approximately 1,200-foot centers.
- At points where pipe material changes (i.e., CMP to RCP).

Additional policy on manhole locations is provided in Section 7.3.10.

7.4.7.2 Types

Access manholes to storm sewers are detailed on the following standard plans.

- Standard Plan R-1-Series shows the manhole structure for sewers 48 inches and under.
- Standard Plan R-2-Series, Manhole Base Type 1, may be used as an intermediate manhole between junctures on existing sewers.
- Standard Plan R-3-Series shows Precast Manhole Tees for use on sewers 42-inch through 144-inch. Precast manhole tees provide access to large sewers. Manhole tees may be used as an intermediate manhole on new sewers between sewer junctures.
- Standard Plan R-4-Series, Manhole Base Type 2, should be used at sewer junctions of sewers 48-inch through 108-inch.

7.4.7.3 Sizing

Sizing Considerations

If there is a considerable deflection in the sewer, or if the inlet and outlet inverts are at substantially different elevations at the structure, Manhole Base Type 2 cannot be used and a special manhole or junction box must be detailed instead. Care must be exercised in not introducing too many sewer leads into conventional manholes (Standard Plan R-1-Series) at or near the same elevation (outside diameters within approximately 1 foot of each other) or having large sewers, such as a 36-inch and a 42-inch entering or leaving at the same elevation. In these cases the structural integrity is seriously weakened and either a large manhole or a special design should be used. Follow the guidelines below for selecting the size of drainage structures where the inlet and outlet pipes deflection is between 135 and 180 degrees.

Drainage Structure Size	Sewer Size
4 feet	24-inch and under
5 feet	30-inch to 36-inch
6 feet	42-inch to 48-inch

When determining the minimum manhole size required if the angle between the pipes is less than 135 degrees or sewer pipes are larger than 48 inches, two general criteria must be met.

- Manhole or inlet structure must be large enough to accept the maximum pipe as shown in Table 7-4.
- Knowing the relative locations of any two pipes, compute:

$$K = (R_1 + T_1 + R_2 + T_2 + 14 \text{ in.})/\Delta$$

Where: R_1 and T_1 are interior radius and wall thickness of Pipe No. 1, inch
R_2 and T_2 are interior radius and wall thickness of Pipe No. 2, inch
Δ = angle between the pipes, degrees

Table 7-4 Manhole Maximum Pipe Size

Manhole Diameter Inch	K Inch/Degree	Maximum Pipe Size Inch
48	0.42	30
60	0.52	42
72	0.63	54
84	0.73	66
96	0.84	72
108	0.94	84

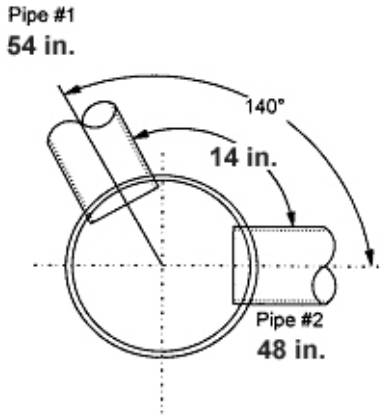

Figure 7-17 Manhole Sizing Example

Example Problem

Given: Pipe No. 1 = 54 inches Pipe No. 2 = 48 inches
$\Delta = 130°$

Solution:

$$K = (27 + 5.5 + 24 + 5 + 14) / 130°$$

$$= 0.58 \text{ inch/degree}$$

The table indicates the minimum manhole barrel to be 72 inches. For the 72-inch manhole barrel, the table indicates a maximum pipe size of 54 inches.

For this example, spacing is not critical and the pipe size governs. Had the Δ angle been 115° or less, the spacing would be critical and a larger manhole barrel would have been required.

Measurement and Payment

The current standard specifications classify access manholes as drainage structures. Payment for additional depth will be in feet. The riser above a manhole tee or manhole base will be paid for separately in feet.

A system of numbering drainage structures on projects has proven to be valuable to field personnel, especially on complex urban projects. Therefore, drainage structures will be numbered consecutively on plans. The corresponding number for each drainage structure should also be shown on the profiles or any other place on the plans where it would appear.

7.4.8 Storm Drain Systems

7.4.8.1 Introduction (updated January 2004)

A storm sewer is defined as that portion of the storm drainage system that receives runoff from inlets and conveys the runoff to some point where it is then discharged into a channel, water body, or piped system. A storm sewer may be a closed-conduit, open-conduit, or some combination of the two. Storm sewers should have adequate capacity so that they can accommodate runoff that enters the system. They should be designed with future development in mind; Federal Aid Policy Guide 650 allows 20 years for development of land use. The storm drain system for a major vertical sag curve should have a higher level of flood protection to decrease the depth of ponding on the roadway and bridges. Where feasible, the storm sewers may be designed to avoid existing utilities; however, utility relocation may be the most preferred option. In these instances, coordinate with the TSC Utilities Engineer. Attention shall be given to the storm sewer outfalls to ensure that the potential for soil erosion is minimized. Drainage system design should be coordinated with the proposed staging of large construction projects in order to maintain an outlet throughout the construction project.

The placement and capacities should be consistent with local stormwater management plans. In the storm sewer, a minimum velocity of 3 fps must be met in order to prevent sedimentation from occurring in the pipe.

After determining the preliminary locations of inlets, connecting pipes, and outfalls with tailwater, the next step is computing the rate of discharge carried by each reach of the storm sewer and determining the size and gradient of pipe required to convey this discharge. Start at the upstream reach, calculate the discharge and size the pipe, then proceed downstream, reach-by-reach to the point where the storm sewer connects with other drains or the outfall. Where the manhole pipe size is increased, the downstream crown should be lower than the upstream crown by the amount of the energy loss in the manhole.

The rate of discharge at any point in the storm sewer is not necessarily the sum of the inlet flow rates of all inlets above that section of storm sewer. It is generally less than this total. The time of concentration is most influential and as the time of concentration grows larger, the rainfall intensity to be used in the design grows smaller. In some cases, where a relatively large drainage area with a short time of concentration is added to the system, the peak flow may be larger using the shorter time even though the entire drainage area is not contributing. The prudent designer will be alert for unusual conditions and determine which time of concentration controls for each pipe segment. See Chapter 3, Hydrology, Section 3.4, for a discussion on time of concentration. For ordinary conditions, storm sewers should be sized on the assumption that they will flow full, or practically full, under the design discharge, but will not flow under pressure head.

Storm Sewer Pipe Classification and Usage Guidelines

The Design Unit should follow the procedures listed below.

- Select the appropriate class of sewer according to the current MDOT Standard Specifications. The design life for sewers will be 70 years.
- In some applications, a specific material for a sewer pipe may be required exclusively, or a specific material may be determined inappropriate for a specific location. The required material should be specified in the pay item. The prohibited material should be identified by note on the plans. When a specific material is prohibited, and its exclusion is not covered in the Standard Specifications for Construction, a note to the file must be written to describe the basis for exclusion. This information should also be forwarded to the field. The exception is when extending an existing system with a like material.

  Example:

  When a specific location has an existing corrugated metal pipe that has failed prematurely due to corrosion, exclusion of that material may be warranted. If concern exists that the environment may be aggressive to a corrugated metal pipe, collect pH and resistivity data supporting the concern to justify an exclusion of that product.

- The following examples are to be used as a guide when calling for sewers on plans:

  100-foot Sewer, Cl A, 18-inch, Tr Det A
  100-foot Sewer, Cl III, 18-inch, Tr Det A
  100-foot Sewer, Cl IV, 48-inch, Jacked-in-Place

- Sewers of the chosen class should extend between structures rather than being broken in the middle of a section; however, the trench detail can change.
- In a given section of sewer, the entire section should meet the requirements for the most critical point in the section.

Jacked-in-Place Sewers

At times it may be necessary to install sewer pipe by jacking or tunneling methods. A sewer installed by jacking or tunneling may be considered a special design; therefore, a request to determine the design of the pipe should be made to the Design Engineer - Municipal Utilities.

Storm Sewer Soil Borings

The plans and specifications do not automatically provide for the additional work required to install sewers through areas of unstable soils. Therefore, soil borings must be obtained and shown on the plans to identify where remedial treatment is necessary. Corrective treatment usually means undercutting and backfilling. Also, in areas having a high water table, a well point system may sometimes be considered. The designer should consult with the Geotechnical Engineer - Construction and Technology Support Area.

For further discussion, see the Road Design Manual, Section 4.02.21.

7.4.8.2 Hydraulic Capacity

The most widely used formula for determining the hydraulic capacity of storm sewers for gravity and pressure flows is Manning's n formula and it is expressed by the following equation:

$$\mathbf{V = 1.49/n\ R^{2/3}\ S^{1/2}} \qquad \textbf{(7.17)}$$

Where: V = mean velocity of flow, fps
N = Manning's roughness coefficient
R = hydraulic radius, feet = area of flow divided by the wetted perimeter (A/WP)
S = the slope of the energy grade line, feet/foot

In terms of discharge, the above formula becomes:

$$Q = VA = 1.49/n\ AR^{2/3}\ S^{1/2}$$

Where: Q = rate of flow, cfs
A = cross-sectional area of flow, sf

The term ($1.49/n\ AR^{2/3}$) can be grouped into a constant for each section of pipe and the equation becomes:

$$\mathbf{Q = K\ S^{1/2}} \qquad \textbf{(7.18)}$$

Where: $K = 1.49 / (n\ AR^{2/3})$

The following table can be used to determine the size of pipe necessary for each section based on the conveyance factor, K, and Manning’s n for that reach. MDOT standards for Manning's n coefficient in storm sewers are:

n = 0.013 for vitrified clay, concrete, plastic, and spiral ribbed pipe
n = 0.024 for corrugated metal pipe

Table 7-5 Conveyance Factor and Pipe Sizes

Pipe Diameter	Area in Square Ft. (A)	Hydraulic Radius (R)	Conveyance Factor (k)	
			n = 0.013	n = 0.024
12-in.	0.785	0.250	35.66	19.3
15-in.	1.227	0.3125	64.7	35.01
18-in.	1.767	0.375	105.1	56.9
24-in.	3.142	0.500	226.2	122.6
30-in.	4.909	0.625	410.1	
36-in.	7.069	0.750	666.6	
42-in.	9.621	0.875	1006	
48-in.	12.566	1.000	1436	
54-in.	15.904	1.125	1967	
60-in.	19.635	1.250	2604	
66-in.	23.758	1.375	3357	
72-in.	28.274	1.500	4234	
78-in.	33.183	1.625	5242	
84-in.	38.485	1.750	6388	
90-in.	44.179	1.875	7681	
96-in.	50.266	2.000	9119	
102-in.	56.745	2.125	10722	
108-in.	63.617	2.250	12486	
114-in.	70.822	2.375	14422	
120-in.	78.54	2.500	16537	

The nomograph solution of Manning's formula for full flow in circular storm sewers is shown in Figure 7-18, Nomograph for Computing Required Size of Circular Storm Sewer for Full Flow. Figure 7-19, Values of Hydraulic Elements of Circular Section for Various Depths of Flow, has been provided to assist in the solution of the Manning's equation for part full flow in storm sewers.

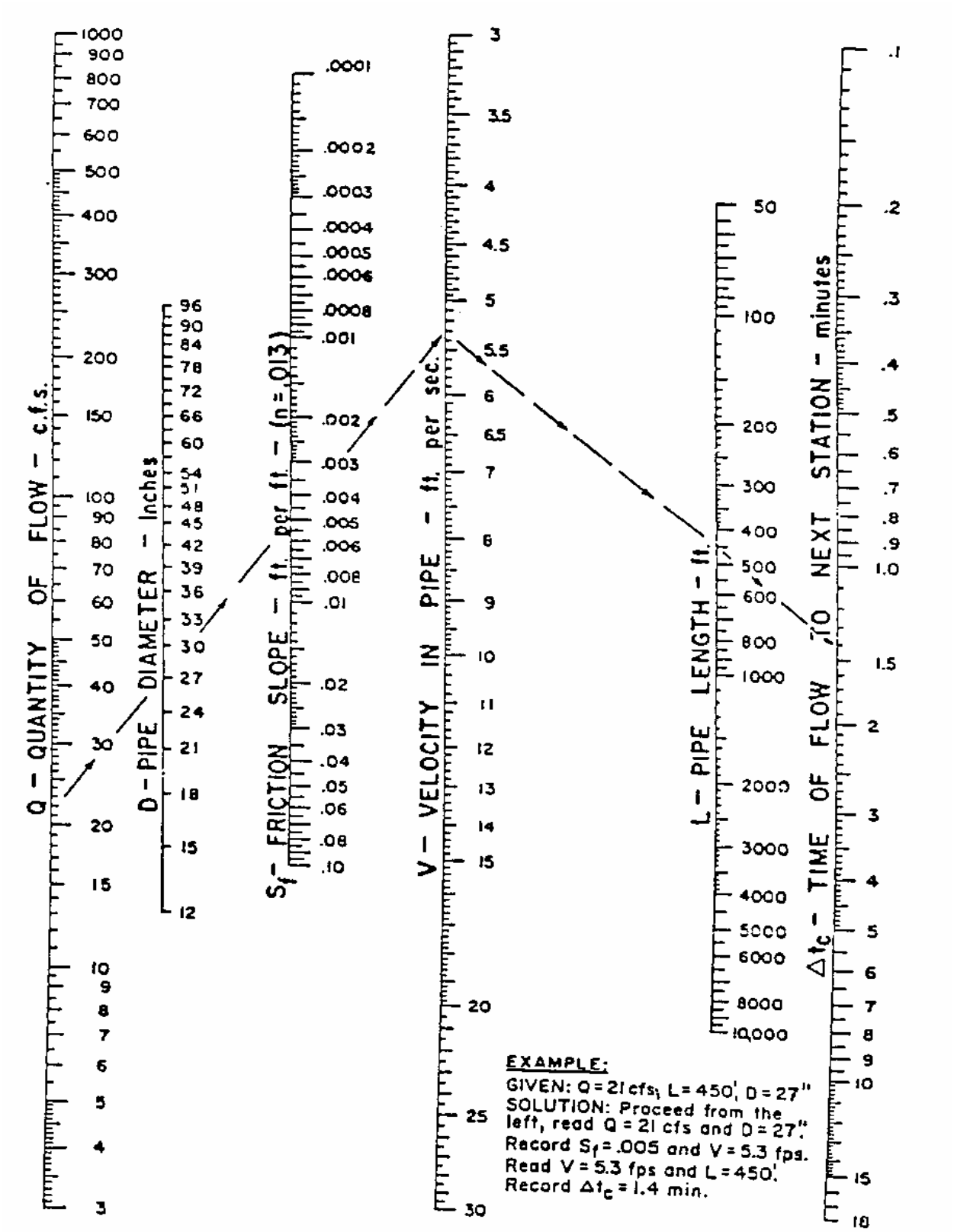

Figure 7-18 Nomograph for Computing Required Size of Circular Storm Sewer for Full Flow, n = 0.013

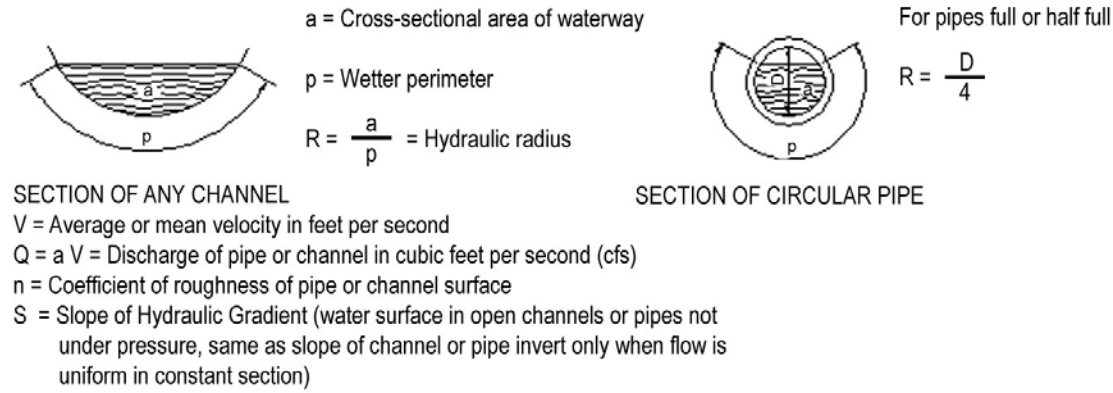

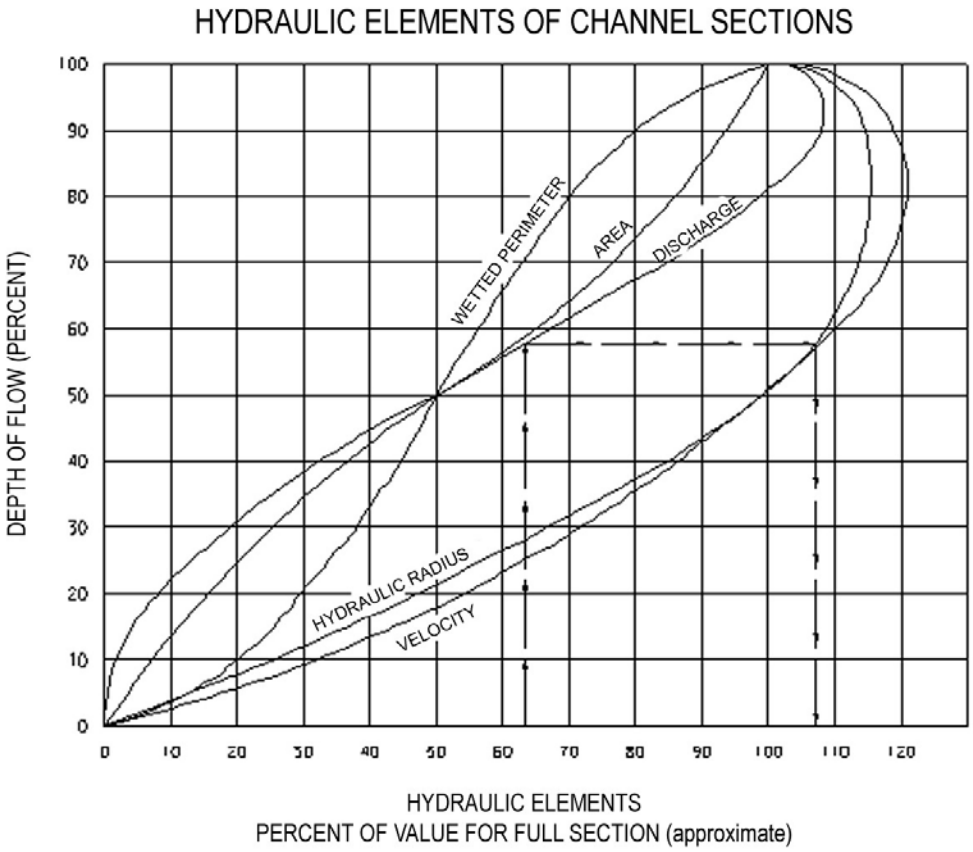

Figure 7-19 Values of Hydraulic Elements of Circular Section for Various Depths of Flow

7.4.8.3 Minimum Sizes

Storm sewers, including cross leads, shall have a minimum diameter of 12 inches.

7.4.8.4 Minimum Grades

All storm sewers should be designed such that velocities of flow will not be less than 3.0 fps at design flow. For very flat grades, the general practice is to design components so that flow velocities will increase progressively throughout the length of the pipe system. The storm sewer system should be checked to be sure there is sufficient velocity in all of the drains to deter settling of particles. Minimum slopes are given in Table 7-6. These slopes will provide the required velocity of 3.0 fps or greater.

The physical grade of the sewer should be sufficient to ensure a reasonable self-cleaning velocity at flows less than the design storm.

The table below lists the minimum practical construction grades to be used for various sizes of circular concrete, plastic, or spiral rib pipe with a 0.013 Manning n value.

Table 7-6 Minimum Sewer Slopes

Pipe Self-Cleaning Slopes			
Pipe Size	**Grade %**	**Pipe Size**	**Grade %**
12-inch	0.48	54-inch	0.09
15-inch	0.36	60-inch	0.09
18-inch	0.28	66-inch	0.08
24-inch	0.17	78-inch	0.08
30-inch	0.15	90-inch	0.07
36-inch	0.12	102-inch	0.06
42-inch	0.12	108-inch	0.06
48-inch	0.10	120-inch	0.06

Sewers will be designed with a limiting maximum velocity of 12 fps. If sharp sediments, such as sand, are not anticipated, the design may be based on a maximum velocity of 15 fps. Velocities greater than 6 fps may require the design and installation of energy dissipation structures at the outlet of the storm sewer (see FHWA, HEC-14).

7.4.8.5 Curved Alignment

When design requires the use of curved alignment of pipes, contact the Design Engineer - Municipal Utilities.

7.4.9 Hydraulic Grade Line

7.4.9.1 Introduction

The hydraulic grade line (HGL) is an important feature to be established relating to the hydraulic design of storm sewers. This grade line aids the designer in determining the acceptability of the proposed system by establishing the elevations along the system to which the water will rise when the system is operating from a flood of design frequency.

The hydraulic grade line is the plot of points represented in Bernoulli's Equation as:

$$z_1 + p_1/w$$

and is the level that water will rise in a manhole.

Bernoulli Equation:

$$\mathbf{z_1 + V_1^2/2g + p_1/w = z_2 + V_2^2/2g + p_2/w} \qquad \textbf{(7.19)}$$

Where: g = acceleration due to gravity, 32.2 feet/sec.^{2}
w = unit weight of water, 62.4 lb./foot^3
v = Velocity of flow in feet/sec.
z = distance above chosen datum, referred to as elevation head
p = pressure of fluid in lb./foot^3

In general, if the HGL is above the crown of the pipe, pressure flow hydraulic calculations are appropriate. Conversely, if the HGL is below the crown of the pipe, open channel flow calculations are appropriate. A special concern with storm sewers designed to operate under pressure flow conditions is that inlet surcharging and possible manhole lid displacement can occur if the hydraulic grade line rises above the ground surface. A design based on open channel conditions must be carefully planned as well, including evaluation of the potential for excessive and inadvertent flooding created when a storm event larger than the design storm pressurizes the system. As hydraulic calculations are performed, frequent verification of the existence of the desired flow condition should be made. Storm sewer systems can often alternate between pressure and open channel flow conditions from one section to another.

The detailed methodology employed in calculating the HGL through the system begins at the system outfall with the tailwater elevation. If the outfall is an existing storm sewer system, the HGL calculation must begin at the outlet end of the existing system and proceed upstream through this in-place system, then upstream through the proposed system to the upstream inlet. The same considerations apply to the outlet of a storm sewer as to the outlet of a culvert. See Chapter 5, Culverts, Figure 5-4, Unsubmerged Flow, for a sketch of a culvert outlet which depicts the difference between the HGL and the energy grade line (EGL). Usually it is helpful to compute the EGL first, then subtract the velocity head ($V^2/2g$) to obtain the HGL.

7.4.9.2 Tailwater

Tailwater elevations for a channel are calculated using the water surface profile calculations contained in Chapter 4, Natural Channels and Roadside Ditches.

For most design applications, the tailwater will be above the crown of the outlet, or it can be considered to be between the crown and critical depth. To determine the EGL, begin with the tailwater elevation or $(d_c + D)/2$, whichever is higher, add the velocity head for full flow, and proceed upstream to compute all head losses, such as exit losses, friction losses, junction losses, bend losses, and entrance losses as appropriate.

An exception to the above might be a very large outfall with low tailwater. In this case, a water surface profile calculation would be appropriate to determine the location where the water surface will intersect the top of the barrel and full flow calculations can begin. The downstream water surface elevation would be based on critical depth or the tailwater whichever is higher.

When estimating tailwater depth on the receiving stream, the prudent designer will consider the joint or coincidental probability of two events occurring at the same time. For the case of a tributary stream or a storm sewer, its relative independence may be qualitatively evaluated by a comparison of its drainage area with that of the receiving stream. A short duration storm which causes peak discharges on a small basin may not be critical for a larger basin. Also, it may safely be assumed that if the same storm causes peak discharges on both basins, the peaks will be out of phase. To aid in the evaluation of joint probabilities, refer to Table 7-7.

Table 7-7 Frequencies for Coincidental Occurrence

Area Ratio	FREQUENCIES FOR COINCIDENTAL OCCURRENCE			
	10 Percent (10-Year) Chance Storm		2 Percent (50-Year) Chance Storm	
	Receiving System	Contributing System	Receiving System	Contributing System
10,000 to 1	100% (1-yr.)	10% (10-yr.)	50% (2-yr.)	2% (50-yr.)
1,000 to 1	50% (2-yr.)	10% (10-yr.)	20% (5-yr.)	2% (50-yr.)
100 to 1	20% (5-yr.)	10% (10-yr.)	10% (10-yr.)	2% (50-yr.)
10 to 1	10% (10-yr.)	10% (10-yr.)	4% (25-yr.)	2% (50-yr.)
1 to 1	10% (10-yr.)	10% (10-yr.)	2% (50-yr.)	2% (50-yr.)

Source: USACE Norfolk District, 1974

Example Problem

Area to be drained by storm sewer is 15 acres. Storm is to discharge to a watercourse having a drainage area of 1,500 acres. What design storms should be used for sizing the system for a 10 percent chance (10-year) performance?

Solution

The drainage area ratio is 1,500/15 or 100 to 1. From the table, the storm sewer shall be sized for a 10 percent chance (10-year) storm. The system should be checked to ensure it functions with the hydraulic grade line 2 feet below the gutter pan with a 10 percent chance (10-year) flow in the sewer and the receiving water at a 20 percent chance (5-year) flood elevation.

7.4.9.3 Exit Loss

The exit loss is a function of the change in velocity at the outlet of the pipe. For a sudden expansion, such as an endwall, the exit loss is:

$$H_o = 1.0\ (V^2/2g - V_d{}^2/2g) \qquad (7.20)$$

Where: V = average outlet velocity, fps
V_d = channel velocity downstream of outlet, fps

Note that when $V_d = 0$, as in a reservoir, the exit loss is one velocity head. For part full flow where the pipe outlets in a channel with moving water, the exit loss may be reduced to virtually zero.

7.4.9.4 Bend Loss

The bend loss coefficient for storm sewer design is minor but can be evaluated using the formula:

$$H_b = 0.0033\ (\Delta)\ (V_o^2/2g) \qquad (7.21)$$

Where: Δ = angle of curvature in degrees

7.4.9.5 Friction Loss

The friction slope is the energy gradient in feet/foot for that run. The friction loss is simply the energy gradient multiplied by the length of the run in meters. Energy losses from pipe friction may be determined by rewriting Manning's equation with terms as previously defined:

$$S_f = [Vn/1.49R^{2/3}]^2 \qquad (7.22)$$

The head losses due to friction may be determined by the formula:

$$\mathbf{H_f = S_f L} \qquad \textbf{(7.23)}$$

Manning's equation can also be written to determine friction losses for storm sewers as follows:

$$H_f = 2.21V^2Ln^2/D^{4/3}$$

$$\mathbf{H_f = [29\ Ln^2/R^{4/3}]\ (V^2/2g)} \qquad \textbf{(7.24)}$$

Where: H_f = total head loss due to friction, feet
n = Manning's roughness coefficient
D = diameter of pipe, feet
L = length of pipe, feet
V = mean velocity, fps
R = hydraulic radius, feet
g = acceleration due to gravity, 32.2 feet/s^2
S_f = slope of hydraulic grade line, feet/foot

7.4.9.6 Manhole Losses

The head loss encountered in going from one pipe to another through a manhole is commonly represented as being proportional to the velocity head at the outlet pipe. Using K to signify this constant of proportionality, the energy loss is approximated as $K = (V_o^2/2g)$. Experimental studies have determined that the K value can be approximated as follows:

$$\mathbf{K = K_o\ C_D\ C_d\ C_Q\ C_P\ C_B} \qquad \textbf{(7.25)}$$

Where: K = adjusted loss coefficient
K_o = initial head loss coefficient based on relative manhole size
C_D = correction factor for pipe diameter (pressure flow only)
C_d = correction factor for flow depth (non-pressure flow only)
C_Q = correction factor for relative flow
C_B = correction factor for benching
C_p = correction factor for plunging flow

<u>Relative Manhole Size</u>

K_o is estimated as a function of the relative manhole size and the angle of deflection between the inflow and outflow pipes. See Figure 7-20, Deflection Angle.

$$K_o = 0.1\ (b/D_o)\ (1-\sin\theta) + 1.4\ (b/Do)^{0.15} \sin\theta \qquad (7.26)$$

Where: θ = the angle between the inflow and outflow pipes
b = manhole diameter, inch
D_o = outlet pipe diameter, inch

Manholes generally have a minimum diameter of 48 inches when there is both an incoming and outgoing pipe.

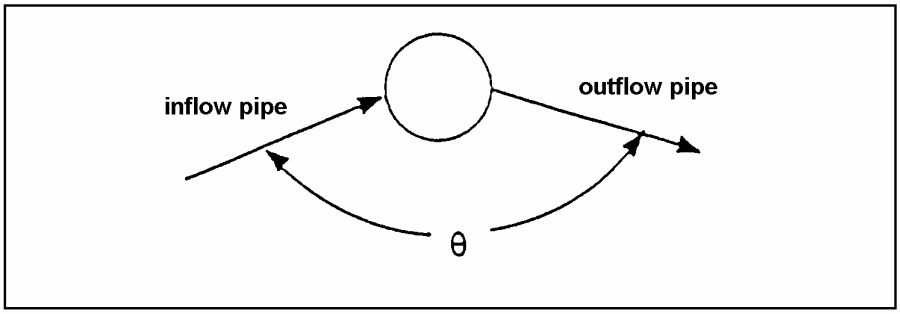

Figure 7-20 Deflection Angle

Pipe Diameter

A change in head loss due to differences in pipe diameter is only significant in pressure flow situations when the depth in the manhole to outlet pipe diameter ratio, d/D_o, is greater than 3.2. Therefore, it is only applied in such cases.

$$C_D = (D_o/ D_i)^3 \qquad (7.27)$$

Where: D_i = incoming pipe diameter, inch
D_o = outgoing pipe diameter, inch

Flow Depth

The correction factor for flow depth is significant only in cases of free surface flow or low pressures, when d/D_o ratio is less than 3.2 and is only applied in such cases. Water depth in the manhole is approximated as the level of the hydraulic grade line at the upstream end of the outlet pipe. The correction factor for flow depth, C_d, is calculated by the following:

$$C_d = 0.5\ (d/ D_o)^{0.6} \qquad (7.28)$$

Where: d = water depth in manhole above outlet pipe invert, feet
D_o = outlet pipe diameter, feet

Relative Flow

The correction factor for relative flow, C_Q, is a function of the angle of the incoming flow as well as the percentage of flow coming in through the pipe of interest versus other incoming pipes. It is computed as follows:

$$C_Q = (1\text{-}2 \sin \theta)\,(1 - Q_i/Q_o)^{0.75} + 1 \qquad (7.29)$$

Where: C_Q = correction factor for relative flow
θ = the angle between the inflow and outflow pipes
Q_i = flow in the inflow pipe, cfs
Q_o = flow in the outlet pipe, cfs

As can be seen from the equation, C_Q is a function of the angle of the incoming flow as well as the percentage of flow coming in through the pipe of interest versus other incoming pipes. To illustrate this effect, consider the manhole shown Figure 7-21, Relative Flow Effect, and assume the following two cases to determine the impact of Pipe No. 2 entering the manhole.

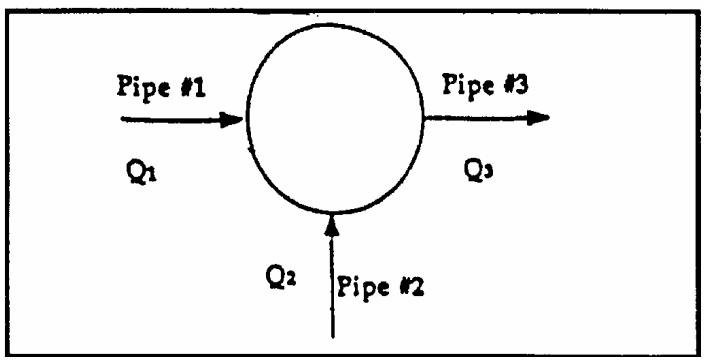

Figure 7-21 Relative Flow Effect

Case 1:
$C_{Q3\text{-}1} = (1\text{-}2 \sin 180)(1 - 3.17/4.23)^{75} + 1 = 1.35$
Q_1 = 3.17 cfs, Q_2 = 1.06 cfs,
Q_3 = 4.23 cfs, then C_Q = 1.35

Case 2:
Q_1 = 1.06 cfs, Q_2 = 3.17 cfs,
Q_3 = 4.23 cfs, then C_Q = 1.81

Plunging Flow

The correction factor for plunging flow, C_p, is calculated by the following:

$$C_p = 1 + 0.2\,(h/D_o)\,((h-d)/D_o) \qquad (7.30)$$

Where: C_p = correction for plunging flow
h = vertical distance of plunging flow from flow line of incoming pipe to the center of outlet pipe, feet
D_o = outlet pipe diameter, feet
d = water depth in manhole, feet

This correction factor corresponds to the effect of another inflow pipe or surface flow from an inlet, plunging into the manhole, on the inflow pipe for which the head loss is being calculated. Using the notations in the above figure for the example, C_p is calculated for Pipe No. 1 when Pipe No. 2 discharges plunging flow. The correction factor is only applied when $h > d$.

Benching

The correction for benching in the manhole, C_B, is obtained from Table 7-8. Benching tends to direct flows through the manhole resulting in reductions in head loss. For flow depths between the submerged and unsubmerged conditions, a linear interpolation is performed. See Figure 7-22, Benching Types.

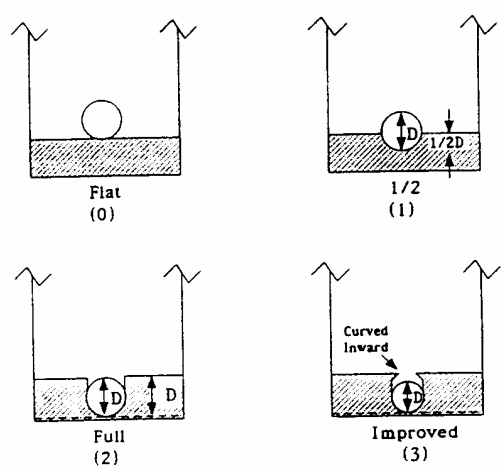

Figure 7-22 Benching Types

Table 7-8 Correction Factors for Benching

Bench Type	Correction Factors C_B	
	Submerged*	Unsubmerged**
Flat floor	1.00	1.00
Half Bench	0.95	0.15
Full Bench	0.75	0.07
Improved	0.40	0.02

* Pressure flow, d/Do > 3.2
** Free surface flow, d/Do < 1.0

Summary

In summary, to estimate the head loss through a manhole from the outflow pipe to a particular inflow pipe, multiply the above correction factors together to get the head loss coefficient, K. This coefficient is then multiplied by the velocity head in the outflow pipe to estimate the minor loss for the connection.

7.4.9.7 Storm Sewer Design, Preliminary Layout

When designing storm sewers, use the Rational Method to determine peak flows for each outlet having a drainage area less than or equal to 20 acres. For drainage areas greater than 20 acres, contact the Design Engineer - Hydraulics/Hydrology for alternate methods of design. The Rational Method uses the formula "Q = CiA" to translate rainfall into peak runoff flow rates. "Q" is the maximum rate of runoff expressed in cubic feet per second, cfs. The Rational Method is described further in Chapter 3, Hydrology.

Storm sewers shall be designed to accommodate the runoff from highway R.O.W. and the surface drainage of those areas outside the R.O.W. which slope naturally toward the roadway. The designer should review with the local jurisdictional authority, i.e., County Drain Commissioner or the Local Planning Commission (on proposed zoning), for future development needs of the community. The designer should negotiate an agreement with the local authority (see Chapter 2, Legal Policy and Procedure).

Sewer Capacity

Sewer capacity shall be calculated with Manning's equation: $Q = KS^{1/2}$. See Section 7.4.8.2 and follow steps outlined below.

Steps in the Design of Storm Sewers Using Rational Method

The following procedure is used to design a storm sewer system. Steps 1 to 7 must be done manually. Steps 8 to 16 can be done by a computer program or by hand calculation. The computer program computes runoff, sewer sizes, and grade, and is the recommended method of designing sewers. The computer procedure is described in the manual titled *Eagle Point Storm Sewers Users Manual, Geopak*, dated November 13, 1992. This program can design a new system or analyze an existing system.

Step 1 Obtain a set of prints covering the area that is contributing runoff to the proposed sewer, i.e., contributing drainage area. Sources of information are: USGS quadrangle maps, photogrammetry 2-foot contours, aerial photographs, county drains maps, plan/profile sheets, etc. Include drainage areas outside of the R.O.W.

Step 2 Identify outlets for storm sewer system to existing available conveyance systems, such as watercourses, public drains, and storm sewers (see Chapter 2, Legal Policy and Procedure).

Step 3 Locate the catch basins and inlets on these prints. Consideration must be given to the capacity of the inlet.

Step 4 Locate the trunk sewer and manholes on the plan portion. Number the manholes beginning at the upper end of the line.

Step 5 Sketch a tentative grade on the profile for the trunk sewer. Note any conflicts with existing utilities. See Step 17 regarding depth of cover.

Step 6 Mark the boundaries of the areas contributing to each manhole (catch basin or inlet, where applicable). Divide and color portions of these areas to show the different percentages of imperviousness.

Step 7 Compute and label the area in acres; also indicate the runoff coefficient for the different percentages of imperviousness.

Step 8 Determine a weighted runoff coefficient “C” value for the first inlet on the trunk sewer. When using the Storm Sewer Program, Geopak, four different “C” values can be entered (four sub-areas of drainage).

Step 9 Determine proper zone, frequency, and the initial time of concentration (10 to 15 minutes) using the Rainfall-Frequency Zone map and Rainfall Intensity Duration Chart.

Step 10 Using Q = CiA, (for drainage areas less than or equal to 20 acres) compute “Q” for the first sewer run and enter it in the “Tabulation Sheet for Computing Storm Sewers.”

Step 11 After computing the "Q" and selecting a tentative sewer grade, the designer then calculates the conveyance factor "k" using the formula: $k = Q/S^{0.5}$.

By knowing Manning's n, the diameter of sewer pipe can be determined by using Table 7-6. For example, when the conveyance factor equals 3, either a 24-inch corrugated steel pipe (CSP) with an n = 0.024, or an 18-inch reinforced concrete pipe (RCP) with an n = 0.013 will be required.

Step 12 Compute velocity "V" for this pipe. If the pipe is not full, use Figure 7-19, Values of Hydraulic Elements of Circular Section for Various Depths of Flow. Be sure that the minimum velocity (3 feet/sec.) is exceeded. Enter "V" into the sewer tabulation chart.

Step 13 Using this velocity, compute the item required for the water to reach the next manhole. Add this time to the initial time to get the time of concentration for the second manhole.

Step 14 Add the new areas of the second manhole to the areas of the first manhole according to their runoff coefficients and compute a new weighted "C" value.

Step 15 Using the new time of concentration, area, intensity, and weighted "C" value, compute the runoff and pipe size as before.

Step 16 Repeat this procedure throughout the length of the sewer.

Step 17 After computing the sewer sizes, put the size and percent grade on the profile sheet. The sewer sizes and grades may be altered to give the most economical sewer in terms of pipe size and depth of sewer or because of conflicts with existing or proposed underground utilities. The depth of sewer should provide a minimum 3 feet of cover.

Once a preliminary sizing is completed, the hydraulic grade line, HGL, should be calculated through the system. This is important to ensure the tailwater elevation and the manhole losses do not cause surcharged conditions.

7.4.9.8 Hydraulic Grade Line Design Procedure

The equations and charts necessary to manually calculate the location of the hydraulic grade line are included in this chapter. The Geopak computer program is recommended for design of storm sewers and will include a HGL analysis and a pressure flow simulation. Table 7-9 can be used to document the procedure.

Table 7-9 Storm Sewer Preliminary Layout Worksheet

Storm Sewer Preliminary Layout Worksheet
Job Name _____

Date _____ Route _____
Job No. _____ Control Section _____
Computed by _____ Checked by _____
Sheet ____ of ____

CB or MH	Station	New Acres Added	Weighted C	Accum. Acres	Accum. Weighted C	Time (min.)	Intensity (in./hr.)	"Q" (cfs) Accum.	Q_{cap} (cfs)	Grade (ft./ft.)	K ($Q/s^{1/2}$)	Size (in.)	Velocity (fps)	Length (ft.)	Travel Time (min.)

If the HGL is above the pipe crown at the next upstream manhole, pressure flow calculations are indicated; if it is below the pipe crown, open channel flow calculations should be used at the upstream manhole. The process is repeated throughout the storm sewer system. If all HGL elevations are acceptable, then the hydraulic design is adequate. If the HGL exceeds an inlet elevation, then adjustments to the trial design must be made to lower the water surface elevation.

See Figure 7-23, Use of Energy Losses in Developing a Storm Sewer System, for a sketch depicting the use of energy losses in developing a storm sewer system.

Step 1 Enter in Col. 1 the station for the junction immediately upstream of the outflow pipe. HGL computations begin at the outfall and are worked upstream taking each junction into consideration.

Step 2 Enter in Col. 2 the tailwater elevation if the outlet will be submerged during the design storm, otherwise refer to the tailwater discussion in Section 7.4.11 for procedure.

Step 3 Enter in Col. 3 the diameter (D_o) of the outflow pipe.

Step 4 Enter in Col. 4 the design discharge (Q_o) for the outflow pipe.

Step 5 Enter in Col. 5 the length, L_o, of the outflow pipe.

Step 6 Enter in Col. 6 the outlet velocity of flow, V_o.

Step 7 Enter in Col. 7 the velocity head, $V_o^2/2g$.

Step 8 Enter in Col. 8 the exit loss, H_o.

Step 9 Enter in Col. 9 the friction slope (SF_o) in feet/foot of the outflow pipe. This can be determined by using the Equation 7.34. Note: Assumes full flow conditions.

Step 10 Enter in Col. 10 the friction loss (H_f) which is computed by multiplying the length (L_o) in Col. 5 by the friction slope (SF_o) in Col. 9. On curved alignments, calculate curve losses by using the formula $Hc = 0.0033\ \Delta\ (V_o^2/2g)$, where Δ = angle of curvature in degrees, and add to the friction loss.

Step 11 Enter in Col. 11 the initial head loss coefficient, K_o, based on relative manhole size as computed by Equation 7.26.

Step 12 Enter in Col. 12 the correction factor for pipe diameter, C_D, as computed by Equation 7.27.

Step 13 Enter in Col. 13 the correction factor for flow depth, C_d, as computed by Equation 7.28. Note this factor is only significant in cases where the d/D_o ratio is less than 3.2.

Step 14 Enter in Col. 14 the correction factor for relative flow, C_Q, as computed by Equation 7.29.

Step 15 Enter in Col. 15 the correction factor for plunging flow, C_p, as computed by Equation 7.30. The correction factor is only applied when $h > d$.

Step 16 Enter in Col. 16 the correction factor for benching, C_B, as determined in Table 7-10.

Step 17 Enter in Col. 17 the value of K as computed by Equation 7.25.

Step 18 Enter in Col. 18 the value of the total manhole loss, $K V_o^2/2g$.

Step 19 Col. 19 is the downstream EGL for each reach. At the downstream end, consider the EGL to be equal to the HGL when the water is static. For all upstream stations, the downstream EGL is equal to the upstream EGL calculated for the previous reach.

Step 20 Enter in Col. 20 the sum of the friction head (Col. 10), the manhole losses (Col. 18), and the energy grade line (Col. 19) at the outlet to obtain the EGL at the inlet end. This value becomes the EGL for the downstream end of the upstream pipe.

Step 21 Determine the HGL (Col. 21) throughout the system by subtracting the velocity head (Col. 7) from the EGL (Col. 20).

Step 22 Check to make certain that the HGL is below the level of allowable high water at that point. If the HGL is above the finished grade elevation, water will exit the system at this point for the design flow. Place the ground elevation in Col. 22 and check that the HGL is at least 2 feet below.

The above procedure applies to pipes that are flowing full, as should be the condition for design of new systems. If a part full flow condition exists, the EGL is located one velocity head above the water surface.

ENERGY AND HYDRAULIC GRADE LINES
FOR
STORM SEWER UNDER CONSTANT DISCHARGE

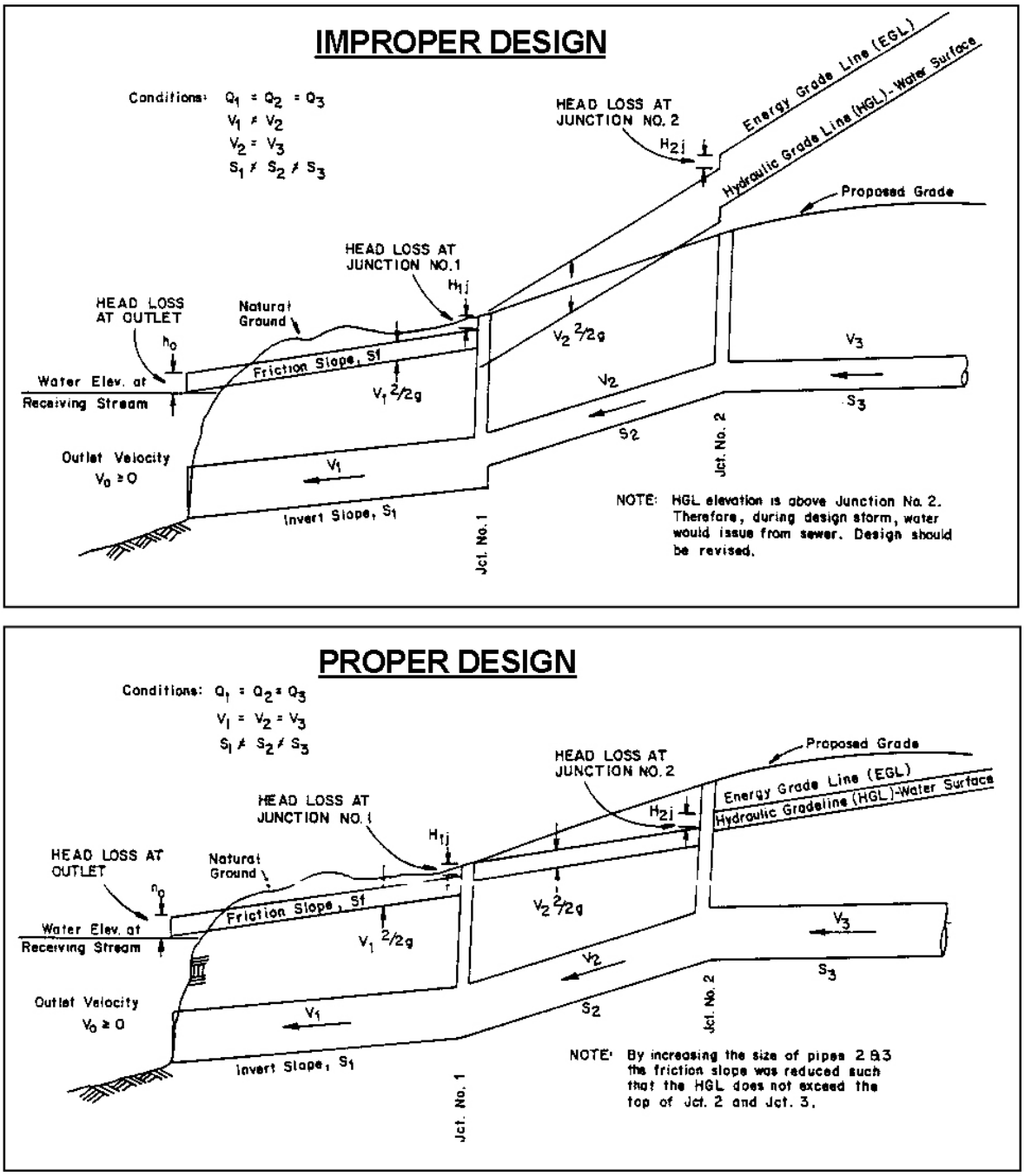

Figure 7-23 Use of Energy Losses in Developing a Storm Sewer System
<u>Improper</u> and <u>Proper</u> Designs

Table 7-10 Storm Sewer Hydraulic Grade Line Worksheet

Station	TW	D_0	Q_o	L_o	V_o	$V_o^2/2g$	H_o	SF_o	H_f	K_o	C_D	C_d	C_Q	C_p	C_B	K	$K(V_o^2/2g)$	EGL_0 2+7	EGL_i 10+18+19	HGL EGL-7	TOC Elev
(1)	(2)	(3)	(4)	(5)	(6)	(7)	(8)	(9)	(10)	(11)	(12)	(13)	(14)	(15)	(16)	(17)	(18)	(19)	(20)	(21)	(22)

Job Name _____
Date _____ Route _____
Job No. _____ Control Section _____
Computed by _____ Checked By _____
Sheet _____ of_____

7.4.10 Example Problem

The following example problem illustrates how to size a storm sewer using the Rational Method as discussed in Section 7.4.9.7, and how to calculate the HGL for the system as described in Section 7.4.9.8.

Problem: Size a storm sewer for the following system given data in Figure 7-24, Example Plan and Profile. The receiving water body elevation is 96.0 feet during the 10 percent chance (10-year) storm event (Calculated using HEC-RAS; see Chapter 3, Hydrology, and Chapter 4, Natural Channels and Roadside Ditches).

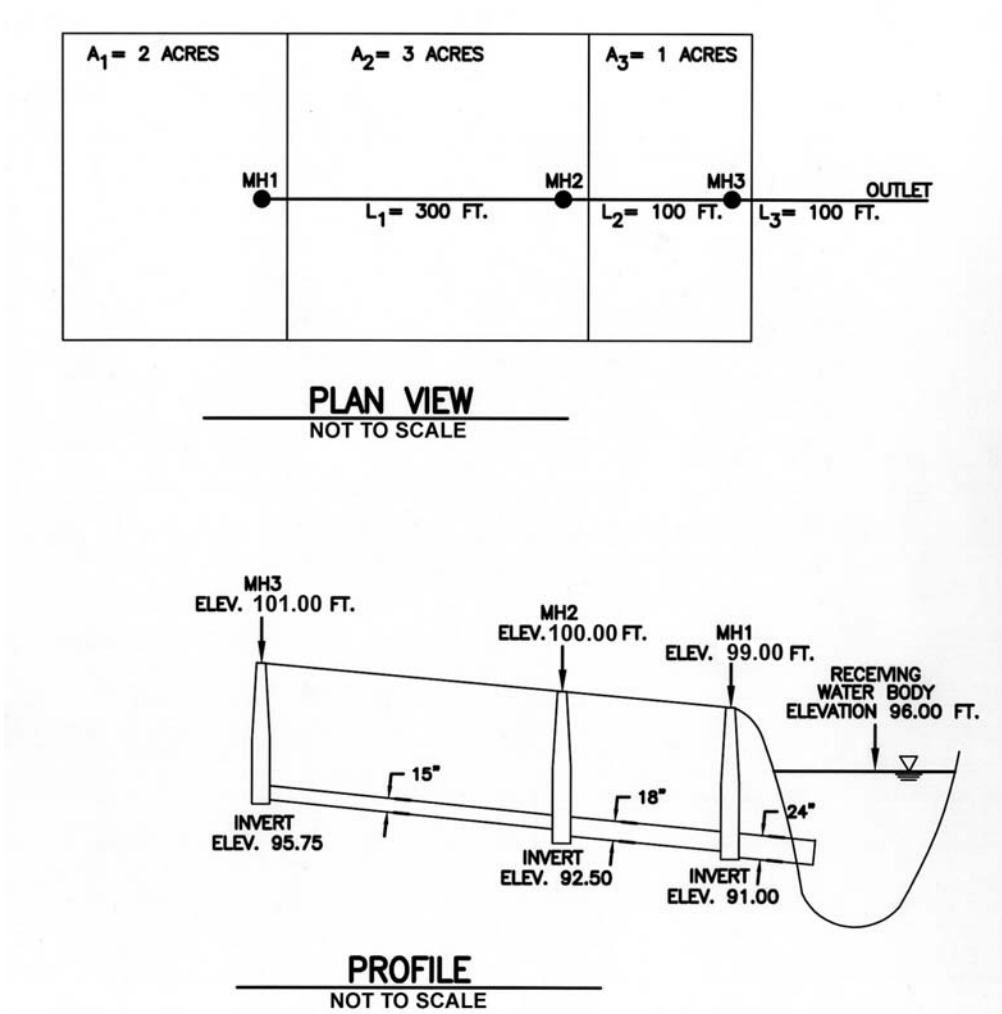

Figure 7-24 Example Plan and Profile

A_1 = 2 acres	A_2 = 3 acres	A_3 = 1 acre
Q_1 = 4.22 cfs	Q_2 = 9.96 cfs	Q_3 = 11.81 cfs
L_1 = 300 feet	L_2 = 100 feet	L_3 = 100 feet
V_1 = 3.44 fps	V_2 = 5.64 fps	V_3 = 3.76 fps
tc_1 = 10.0 min.	tc_2 = 11.45 min.	tc_3 = 11.74 min.
d_1 = 15 inches	d_2 = 18 inches	d_3 = 24 inches

Table 7-11 Tabulation Sheet for Design of Storm Sewers, Example

TABULATION SHEET FOR DESIGN OF STORM SEWERS

Route _____ Control Section _____

__1__ Zone Job Number _____

Station __1__ to Station __3__ __X__ 10-year Computed by: MJH Date 6/4/0

_____ 50-year Checked by: LMI Date 6/8/02

n value 0.013

CB or MH	Station	New Acres Added	Weighted C	Accum. Acres	Accum. Weighted C	Time (min.)	Intensity (in./hr.)	"Q" (cfs) Accum.	Grade (ft./ft.)	K ($Q/s^{1/2}$)	Size (in.)	Velocity (fps)	Length (ft.)	Travel Time (min.)
MH1		2	0.4	2	0.4	10.0	5.27	4.22	0.01	42.2	15	3.44	300	1.45
MH2		3	0.4	5	0.4	11.45	4.98	9.96	0.01	99.6	18	5.64	100	0.29
MH3		1	0.4	6	0.4	11.74	4.92	11.81	0.01	118.1	24	3.76	100	0.44

Calculate the hydraulic profile of the storm sewer system during the 10 percent chance (10-year) storm event.

EGL	HGL
96.00	96.00

Friction loss through 24-inch pipe

Ho = exit loss = $1.0\ (V_o^2/2g)$
$= 1.0\ (3.76^2/64.4)$
$= 0.22$ feet

$h_f = S_f\ L$

$L = 100$ feet

$S_f = (Qn/1.49\ AR^{2/3})^2$

$Q = 11.81$ cfs

$n = 0.013$

$A = \pi/4\ d^2 = \pi/4\ (24/12)^2 = 3.14$ sf

$R = A/wp = \pi/(3.14d) = 1/d = 1/(24/12) = 12/24 = 0.5$ foot

$S_f = [(11.81 \times 0.013)/(1.49\ (3.14)\ (0.5)^{2/3})]^2$
$= [(0.153)/(1.979)]^2$
$= 0.0027$ feet/foot

$h_f = 0.0027 \times 100$ feet $= 0.27$ foot

$h_v = v^2/2g$

$v = Q/A = 11.81/\pi = 3.76$ fps

$h_v = 3.76^2/64.4 = 0.22$ foot

EGL	HGL
96.49	96.27

Manhole Loss

$h_L = K\ (V_o^2/2g)$

V_o = velocity at the outlet pipe

$K = K_o\ C_D\ C_d\ C_Q\ C_P\ C_B$

K_o = Initial head loss coefficient based on relative access hole size.
$= 0.1\ (b/D_o)\ (1\text{-}\sin\theta) + 1.4\ (b/Do)^{0.15} \sin\theta$

b = access hole diameter = 36 inches

D_o = outlet pipe diameter = 24 inches

θ = angle between inlet and outlet pipes = 180 degrees

NOTE: sin 180 degrees = 0, so the last term drops out

$K_o = 0.1\ (36/24)\ (1 - 0) = 0.15$

C_D = correction factor for pipe diameter (pressure flow only)

Check if $d/D_o > 3.2$

d = water depth in manhole = 96.27 - 91 = 5.27 feet

D_o = outgoing pipe diameter = 2 feet

5.27/2 < 3.2 so pressure flow effect is small and C_D is neglected and considered 1.0

C_d = correction factor for flow depth (non-pressure flow or when $d/D_o < 3.2$)

$= 0.5\ (d/D_o)^{0.6}$

$= 0.5\ (5.27/2)^{0.6} = 0.89$

C_Q = correction factor for relative flow

$= (1 - 2 \sin \theta)\ (1 - Q_i/Q_o)^{0.75} + 1$

θ = angle between inflow and outflow pipes

Q_i = inflow = 9.96 cfs

Q_o = outflow = 11.81 cfs

$= (1 - 0)\ (1 - 9.96/11.81)^{0.75} + 1$

$= 1.25$

C_B = correction factor for benching; bench type is flat floor

= 1.00, (Table 7-8)

C_P = correction factor for plunging flow

$= 1 + 0.2\ (h/D_o)\ [(h-d)/D_o]$

h = vertical distance from flow line of incoming pipe to the center of outlet pipe

$= (91.0 + (24/12)/2) - 91.5$

↑ center of outlet pipe ↑ flow line of incoming pipe

= 92.0 - 91.5

= 0.5 foot

D_o = outlet pipe diameter = 2 feet

d = water depth in manhole

= 96.27 - 91.0

= 5.27 feet

$C_P = 1 + 0.2\ (0.5/2)\ [(0.5 - 5.27)/2]$

$= 0.88$

$K = K_o\ C_D\ C_d\ C_Q\ C_P\ C_B$

$= (0.15)\ (1)\ (0.89)\ (1.25)\ (0.88)\ (1)$

$= 0.15$

$h_L = 0.15\ V_o^2/2g$

$V_o = Q_o/A_o = 11.81/3.14 = 3.76$ fps

$h_L = 0.15\ (3.76^2/64.4) = 0.03$ feet

EGL	HGL
96.52	96.30

Friction Loss from Manhole 3 to Manhole 2

$h_f = S_f L$

$L_2 = 100$ feet

$S_f = (Q_2 n / 1.49 A R^{2/3})^2$

$Q_2 = 9.96$ cfs

$n = 0.013$

$A_2 = \pi / 4 (18/12)^2 = 1.77$ sf

$R = A/wp = 1.77/[\pi (18/12)] = 0.37$ foot

$S_f = [(9.96 \times 0.013)/(1.49 \times 1.77 \times 0.37^{2/3})]^2$

$= 0.0091$ feet/foot

$h_f = 0.009 \times 100 = 0.91$ foot

$h_V = V^2/2g = 5.64^2/64.4 = 0.49$ foot

EGL	HGL
97.42	96.94

Manhole Loss (MH2)

$h_L = k V_o^2/2g$

V_o = velocity at outlet pipe = 5.64 fps

$K = K_o C_D C_d C_Q C_P C_B$

$K_o = 0.1 (b/D_o) (1 - \sin\theta) + 1.4 (b/D_o)^{0.15} \sin\theta$

$= 0.1 (36/18) (1 - 0) + 0$

$= 0.2$

$C_D = 1.0$, $d/D_o = (96.94 – 92.5)/1.5 = 4.44/1.5 < 3.2$ low pressure effect

$C_d = 0.5 (d/Do)^{0.6} = 0.5 [(96.94 - 92.5)/1.5]^{0.6} = 0.96$

$C_Q = (1 - 2 \sin\theta) (1 - Q_i/Q_o)^{0.75} + 1$

$= (1 - 0) (1 - 4.22/9.96)^{0.75} + 1$

$= 1.66$

$C_B = 1.00$

$C_P = 1 + 0.2 (h/D_o) [(h – d)/D_o]$

$h = (92.5 + [(18/12)/2]) - 92.75$

↑ center of outlet pipe ↑ flow line of incoming pipe

$= 93.25 - 92.75$

$= 0.5$ foot

$d = 96.94 - 92.5 = 4.44$ feet

$D_o = 1.5$ feet

$= 1 + 0.2\ (0.5/1.5)\ [(0.5 - 4.44)/1.5]$

$C_P = 0.82$

$K = K_o\ C_D\ C_d\ C_Q\ C_P\ C_B$

$= (0.2)\ (1.0)\ (0.96)\ (1.66)\ (0.82)\ (1.00)$

$= 0.26$

$h_L = K\ V_o^2/2g = 0.26 \times (5.64^2/64.4) = 0.13$

EGL	HGL
97.56	97.07

Friction Loss from MH2 to MH1, 15-inch Pipe

$H_f = S_f\ L$

$L = 300$ feet

$S_f = (Qn/1.49\ AR^{2/3})^2$

$Q = 4.22$ cfs

$n = 0.013$

$A = \pi/4\ (15/12)^2 = 1.23$ sf

$R = A/wp = A/\pi d = 1.23/\pi \times (15/12) = 0.31$ foot

$S_f = [(4.22 \times 0.013)/(1.49 \times 1.23 \times 0.31^{2/3})]^2$

$S_f = 0.0043$ feet/foot

$H_f = 0.0043 \times 300$ ft. $= 1.28$ feet

$h_V = V^2/2g = 3.44^2/64.4 = 0.18$

EGL	HGL
98.84	98.66

Entrance Loss

$h_L = 0.5\ V_o^2/2g = 0.5 \times (3.44^2/64.4) = 0.09$

EGL	HGL
98.93	98.75

Conclusions: The calculations show that the HGL elevation is 2.25 feet below the gutter pan. The HGL should not exceed the top of the pipe, and should be at least 1 foot below the gutter pan in depressed roadways. Figure 7-25, Sewer Profile with Calculating HGL Elevations, shows the HGL through the system.

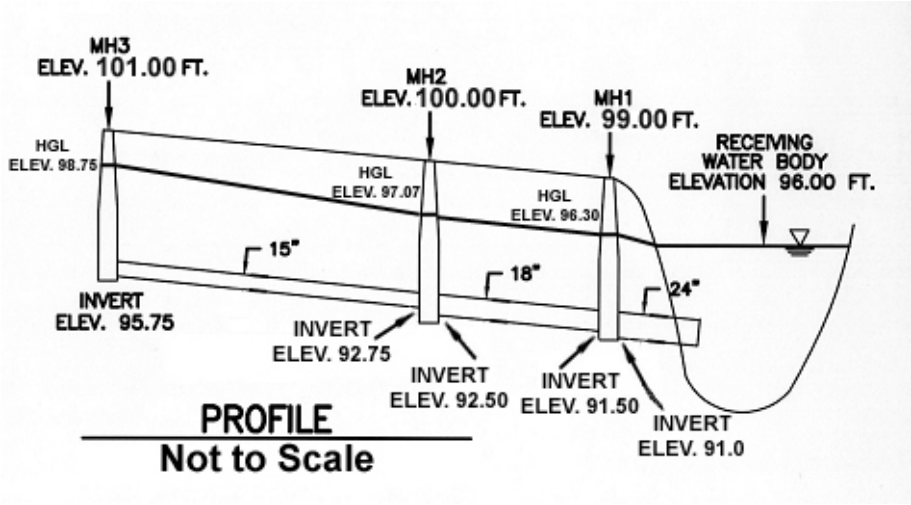

Figure 7-25 Sewer Profile with Calculated HGL Elevations

Table 7-12 Hydraulic Grade Line Computation Form, Example

Down Stream (d.s.) Station	Up Stream (u.s.) Station	d.s. HGL (ft.)	D_0 (in.)	Q_o (cfs)	L_o (ft.)	V_o (fps)	$V_o^2/2g$ (ft.)	H_o/H_E (ft.)	SF_o (ft./ft.)	H_f (ft.)	K_o (-)	C_D (-)	C_d (-)	C_Q (-)	C_B (-)	C_P (-)	K (-)	$K(V_o^2/2g)$ (ft.)	d.s. EGL 2+7 (ft.)	u.s. EGL_i 8+10+18+19 (ft.)	u.s. HGL (20-7) (ft.)	TOC Elev (ft.)
(0)	(1)	(2)	(3)	(4)	(5)	(6)	(7)	(8)	(9)	(10)	(11)	(12)	(13)	(14)	(16)	(16)	(17)	(18)	(19)	(20)	(21)	(22)
Water	MH1	93.00	24	11.81	100	3.76	0.22	0.22	0.0027	0.27	0.15	1.0	0.89	1.25	1.0	0.88	0.03	0.02	96.00	96.52	96.30	98.0
MH1	MH2	93.51	18	9.96	100	5.64	0.49	-	0.009	0.9	0.2	1.0	0.96	1.66	1.0	0.82	0.13	0.07	96.52	97.56	97.07	99.0
MH2	MH3	94.48	15	4.22	300	3.44	0.18	0.09	0.0043	1.28	-	-	-	-	-	-	-	-	97.56	98.93	98.75	100.0

7.4.11 Sag Culverts (Submerged Culverts, Inverted Siphons)

An inverted siphon, or sag culvert, carries the flow under an obstruction such as sanitary sewers, water mains, or any other structure or utility lane which is in the path of the storm sewer line. The storm sewer invert is lowered at the obstacle and is raised again after the crossing. A minimum of two barrels with 3.0 fps velocity is recommended. The inlet and outlet structures should be designed by keeping the normal flow in one barrel to provide the required minimum velocity for self-cleaning and servicing.

See AASHTO's *Model Drainage Manual*, Chapter 5, Culverts.

7.4.12 Underdrains

For information on underdrains, see Section 4.06 of the Road Design Manual. Underdrains can be designed with the principles in this chapter.

7.5 MAINTENANCE

7.5.1 Drainage Structures

The maintenance involved with drainage structures involves removing debris that accumulates on covers and in sumps. It is recommended that covers be inspected and cleaned twice yearly, and sumps be cleaned once or twice annually as needed.

Other maintenance activities should include repairing drainage structure walls, wall-to-pipe connections, and wall-to-cover joints. These locations should be water-tight to prevent piping of soil material that may lead to damage of pavement. Repairs generally consist of grouting defects or installing flexible mechanical seals at the cover and pipe interfaces. See the recommended work method for cleaning catch basins in the MDOT Operations and Maintenance Handbook (Activity Code 12200).

7.5.2 Storm Drains

The maintenance involved in storm drain systems is the removal of any sand, silt, or debris and the maintenance of a tight seal at each pipe joint. There are occasions where abrasive material is present in the water (or some chemical that has a deleterious effect on the pipe) that causes the pipe material to be worn away. This necessitates relining the pipe to preserve its integrity. It is recommended that the entire storm system be inspected prior to any major re-construction project. If capacity is in question due to urbanization, tap-ins may be necessary to increase system capacity.

Water flushing and heavy-duty vacuum equipment can remove most partial clogs. More stubborn blockages can be cleaned by inserting a rodding machine (heavy-duty sewer snake) in one manhole and running it through to the next manhole.

References

American Association of State Highway and Transportation Officials. Volume 9, *Highway Drainage Guidelines, Storm Drainage Systems*. 1992.

American Association of State Highway and Transportation Officials. Model Drainage Manual. 1999.

Eagle Point, *Eagle Point Storm Sewers Users Manual*, November 13, 1992.

Federal Highway Administration. *Design of Bridge Deck Drainage,* Hydraulic Engineering Circular No. 21. 1993.

Federal Highway Administration. Urban Drainage Design Manual, Hydraulic Engineering Cirular No. 22. 1996.

Federal Highway Administration, *Pavement and Geometric Design Criteria for Minimizing Hydroplaning*. FHWA Report No. RD-79-31. December 1979.

Federal Highway Administration. *Design of Urban Highway Drainage* - The State of The Art, FHWA-TS-79-225. 1979.

Dah-Chen Woo. Public Roads, Vol. 52, No. 2 *Bridge Drainage System Needs Criteria*. U.S. Department of Transportation. September 1988.

<u>Note</u>: References in bold type are recommended for the engineer's library.

Weblinks

FHWA Publications

www.fhwa.dot.gov/bridge/hydpub.htm

Geopak

www.geopak.com

- Civil Design Software