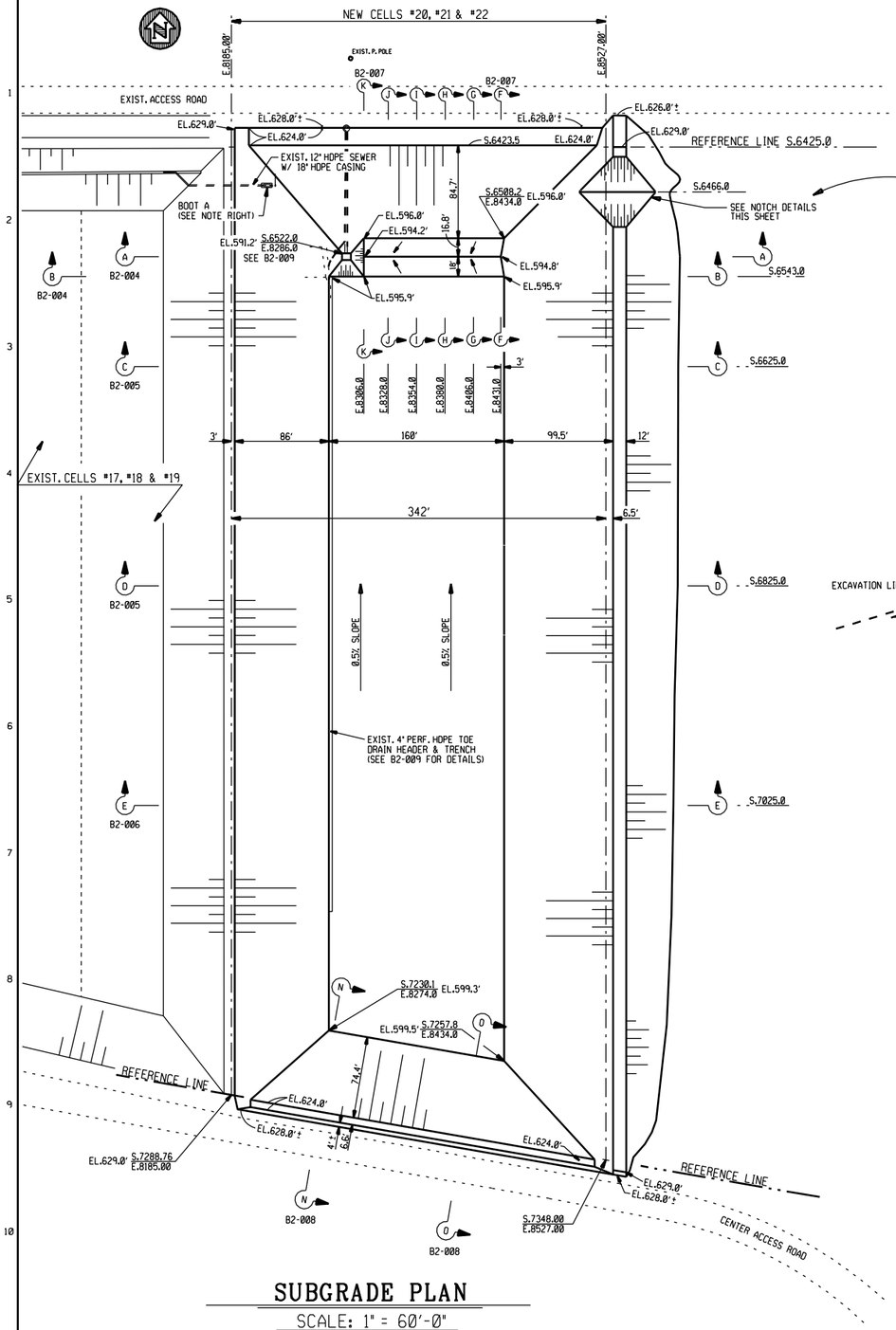

SUBGRADE PLAN

SCALE: 1" = 60'-0"

NOTE:
BOOT A IS TO BE INSTALLED ON THE EXIST. 12" HDPE SEWER BY THE EARTHWORK CONTRACTOR BEFORE THE SSL IS INSTALLED. SEE B2-012 FOR BOOT DETAILS & LOCATION.

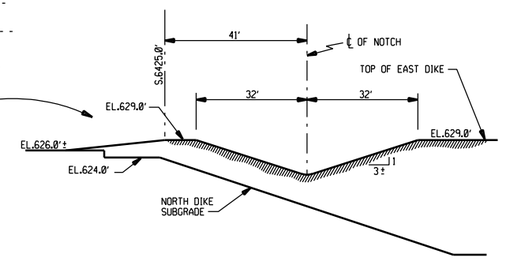

NOTCH DETAIL LOOKING EAST

SCALE: 1" = 20'-0"

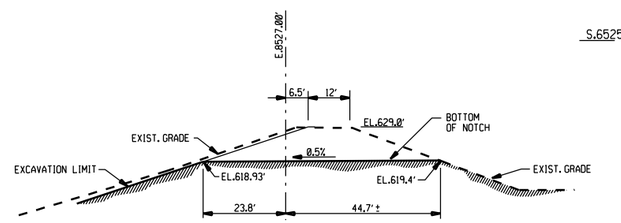

NOTCH DETAIL LOOKING NORTH

SCALE: 1" = 20'-0"

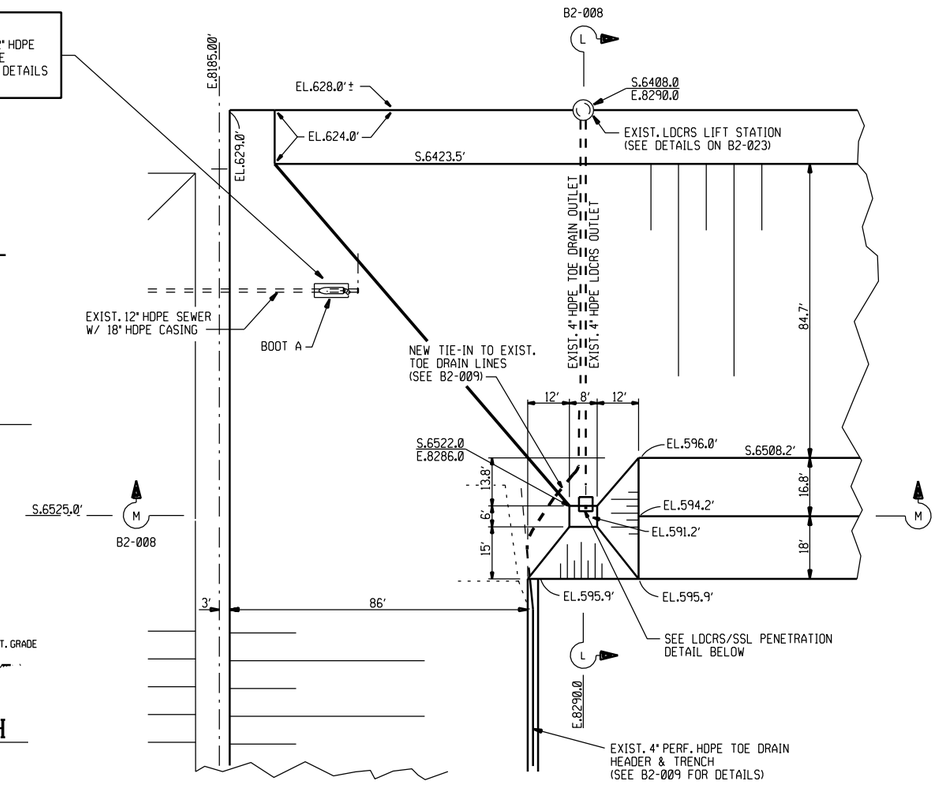

N.W. CORNER EXCAVATION PLAN

SCALE: 1" = 20'-0"

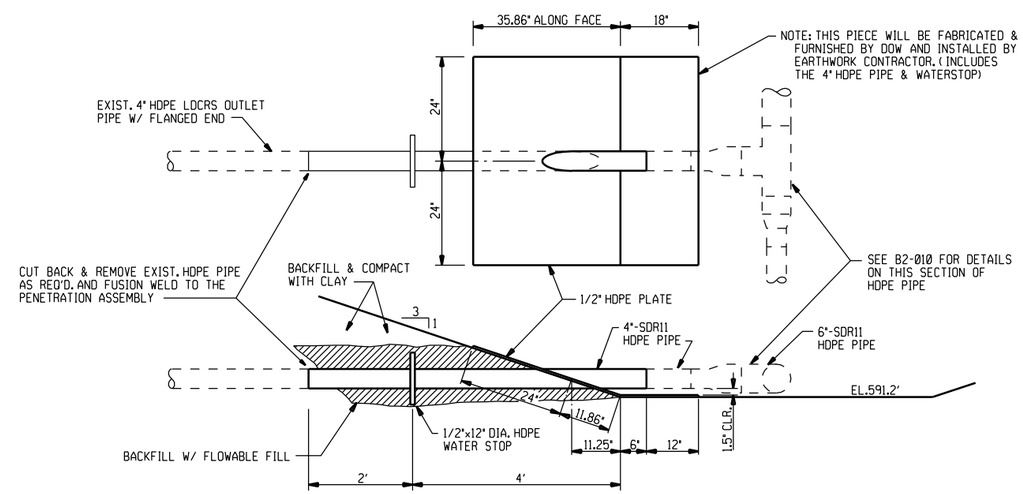

LDCRS/SSL PENETRATION DETAIL

SCALE: 3/4" = 1'-0"

REV. MARK	REVISION	BY	CHK	APP	DATE
A	REVISED PER "AS-BUILT"	LEG	JJA	JJA	12/00

DRAWING ISSUE RECORD						
ISSUE NO.	REV	MATERIAL OR JOB SPEC	BID	FAB	CONST	REF
5	A	MDEQ				1/01
4		S1302 & S1303			3/00	
3		S1303-852	1/00			
2		S1302-852	1/00			
1		MDEQ				1/7/00

DATE ISSUED FOR

DESIGNED	J.J. ALLEN	12/99
DRAWN	L.E. GIRARDIN	12/99
CHECKED	J.J.A.	12/99
APPROVED	J.J.A.	12/99
PROJ. ENGR.	D.L. WILLERTZ	12/99
MFG. REP.	K. DETRICH	12/99

STATUS | PLANT NO.
P.E. SEAL

THE DOW CHEMICAL COMPANY
MICHIGAN DIVISION — MIDLAND, MICHIGAN
SALZBURG LANDFILL — 3600 BLDG.

SUBGRADE PLAN - CELLS 20, 21 & 22

JOB NUMBER	SCALE		REV.
852	AS NOTED	B2-003-852	A

2 PLN

PRINTED | VER.

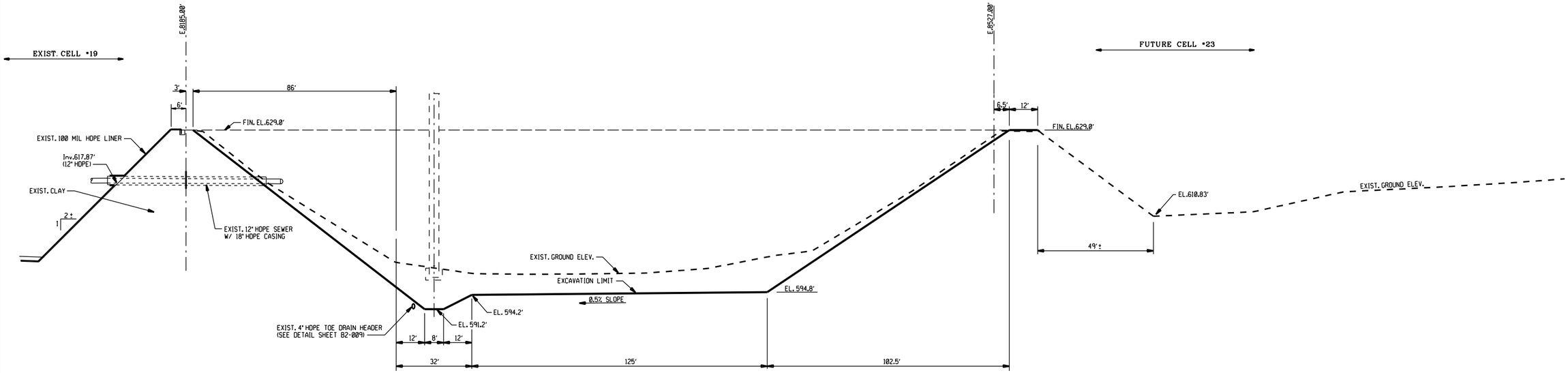

SECTION A-A LOOKING NORTH @ S.6525' (B2-003)

SCALE: HORIZ. 1"=20'-0", VERT. 1"=10'-0"

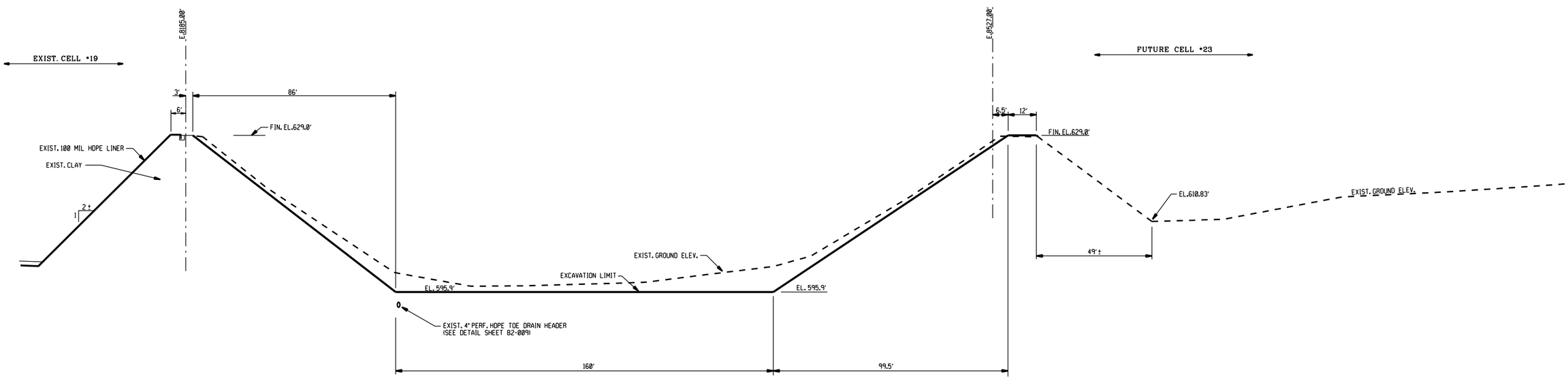

SECTION B-B LOOKING NORTH @ S.6543' (B2-003)

SCALE: HORIZ. 1"=20'-0", VERT. 1"=10'-0"

REV. MARK	REVISION	BY	CHK	APP	DATE
A	REVISED PER "AS-BUILT"	LEG	JJA	JJA	12/00

REV. MARK	REVISION	BY	CHK	APP	DATE

DRAWING ISSUE RECORD

ISSUE NO.	REV	MATERIAL OR JOB SPEC	BID	FAB	CONST	REF
5	A	MDEQ				1/01
4		S1302 & S1303			3/00	
3		S1303-852	1/00			
2		S1302-852	1/00			
1		MDEQ				1/7/00

DATE ISSUED FOR

DESIGNED	J.J. ALLEN	12/99
DRAWN	L.E. GIRARDIN	12/99
CHECKED	J.J.A.	12/99
APPROVED	J.J.A.	12/99
PROJ. ENGR.	D.L. WILLERTZ	12/99
MFG. REP.	K. DETRICH	12/99

STATUS | PLANT NO.

P.E. SEAL

THE DOW CHEMICAL COMPANY

MICHIGAN DIVISION — MIDLAND, MICHIGAN

SALZBURG LANDFILL — 3600 BLDG.

SUBGRADE SECTIONS - CELLS 20, 21 & 22

JOB NUMBER	SCALE		REV.
852	AS NOTED	B2-004-852	A

2 PLN

PRINTED | VER.

$PLOTDRIVER $PAGESETUP $TIME $DATE $LOGINNAME $INSTRUCTIONS

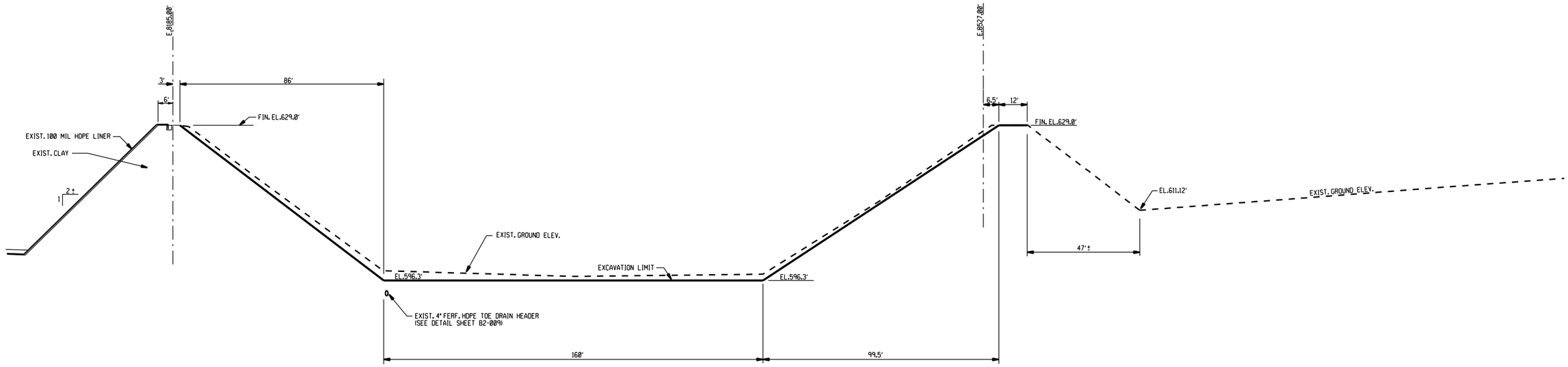

SECTION C-C LOOKING NORTH @ S.6625' (B2-003)

SCALE: HORIZ. 1"=20'-0", VERT. 1"=10'-0"

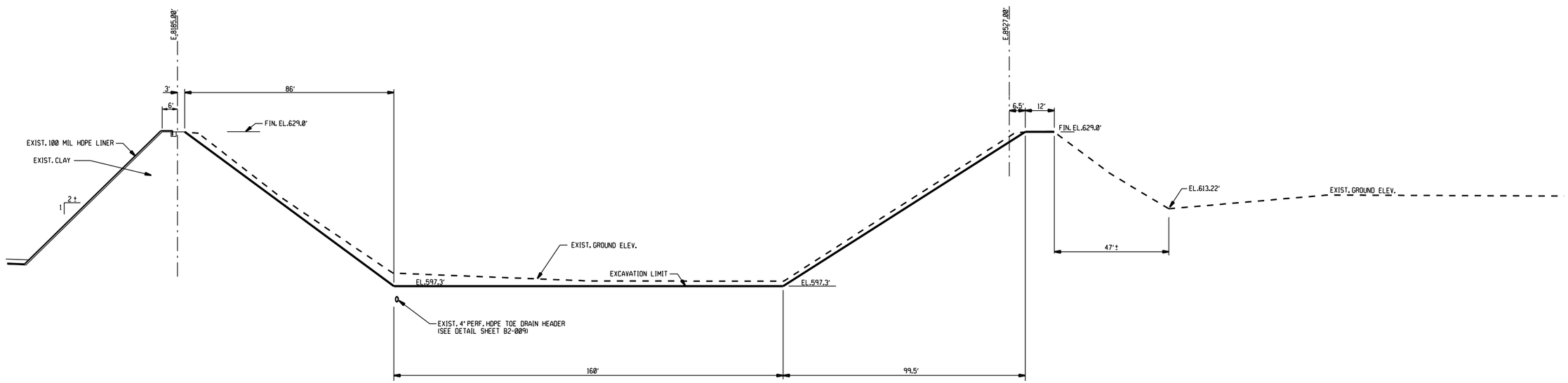

SECTION D-D LOOKING NORTH @ S.6825' (B2-003)

SCALE: HORIZ. 1"=20'-0", VERT. 1"=10'-0"

REV. MARK	REVISION	BY	CHK	APP	DATE
A	"AS-BUILT"	LEG	JJA	JJA	12/00

REV. MARK	REVISION	BY	CHK	APP	DATE

DRAWING ISSUE RECORD

ISSUE NO.	REV	MATERIAL OR JOB SPEC	BID	FAB	CONST	REF
5	A	MDEQ				1/01
4		S1302 & S1303			3/00	
3		S1303-852	1/00			
2		S1302-852	1/00			
1		MDEQ				1/7/00

DATE ISSUED FOR

DESIGNED	J.J. ALLEN	12/99
DRAWN	L.E. GIRARDIN	12/99
CHECKED	J.J.A.	12/99
APPROVED	J.J.A.	12/99
PROJ. ENGR.	D.L. WILLERTZ	12/99
MFG. REP.	K. DETRICH	12/99

STATUS | PLANT NO.

P.E. SEAL

THE DOW CHEMICAL COMPANY

MICHIGAN DIVISION — MIDLAND, MICHIGAN

SALZBURG LANDFILL — 3600 BLDG.

SUBGRADE SECTIONS - CELLS 20, 21 & 22

JOB NUMBER	SCALE		REV.
852	AS NOTED	B2-005-852	A

2 PLN

PRINTED | VER.

$PERSON $DATE $TIME $FILENAME $INSTRUCTIONS

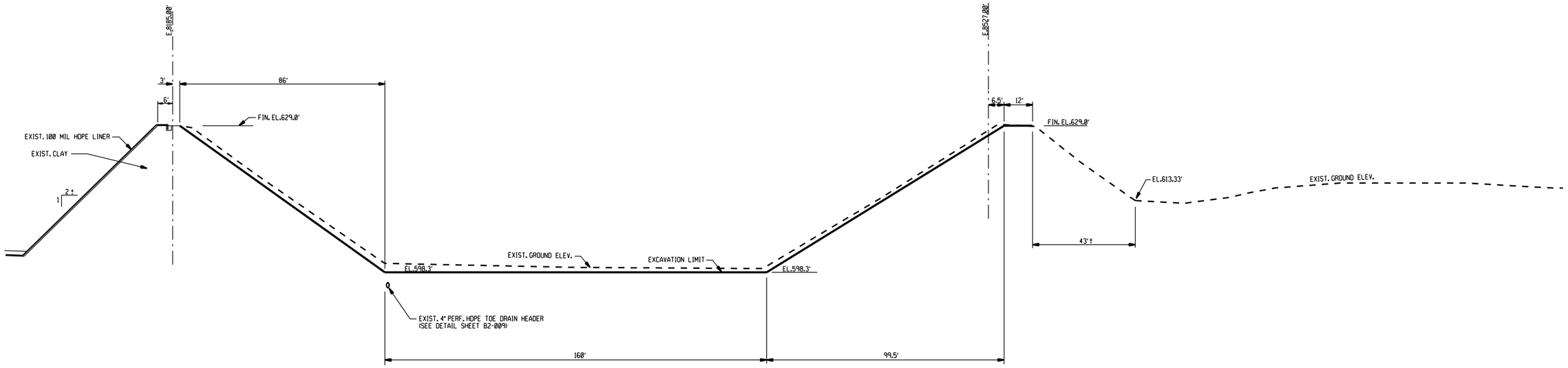

SECTION E-E LOOKING NORTH @ S.7025' (B2-003)

SCALE: HORIZ. 1"=20'-0", VERT. 1"=10'-0"

REV. MARK	REVISION	BY	CHK	APP	DATE
A	*AS-BUILT*	LEG	JJA	JJA	12/00

REV. MARK	REVISION	BY	CHK	APP	DATE

DRAWING ISSUE RECORD

ISSUE NO.	REV	MATERIAL OR JOB SPEC	BID	FAB	CONST	REF
5	A	MDEQ				1/01
4		S1302 & S1303			3/00	
3		S1303-852	1/00			
2		S1302-852	1/00			
1		MDEQ				1/7/00

DATE ISSUED FOR

DESIGNED	J.J. ALLEN	12/99
DRAWN	L.E. GIRARDIN	12/99
CHECKED	J.J.A.	12/99
APPROVED	J.J.A.	12/99
PROJ. ENGR.	D.L. WILLERTZ	12/99
MFG. REP.	K. DETRICH	12/99

STATUS | PLANT NO.

P.E. SEAL

THE DOW CHEMICAL COMPANY

MICHIGAN DIVISION — MIDLAND, MICHIGAN

SALZBURG LANDFILL — 3600 BLDG.

SUBGRADE SECTION - CELLS 20, 21 & 22

JOB NUMBER	SCALE		REV.
852	AS NOTED	B2-006-852	A

2 PLN

PRINTED | VER.

$PERSON $DATE $TIME $FILENAME $INSTRUCTIONS

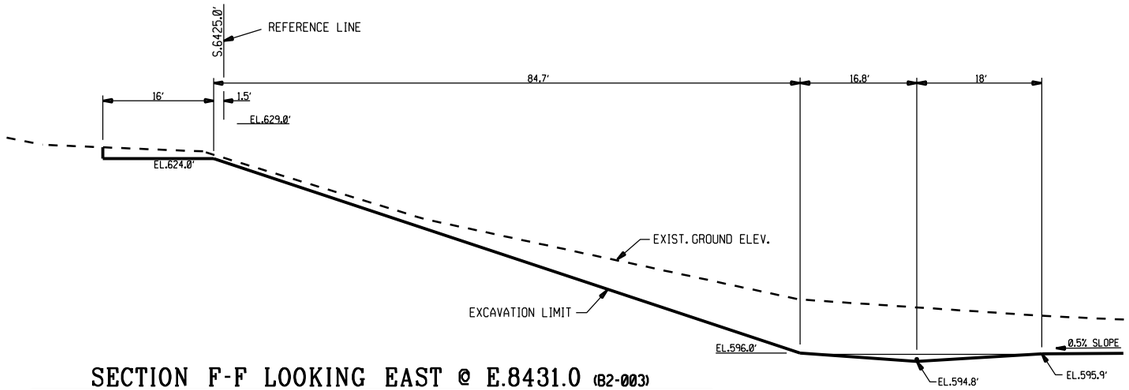

SECTION F-F LOOKING EAST @ E.8431.0 (B2-003)

SCALE: 1"=10'-0"

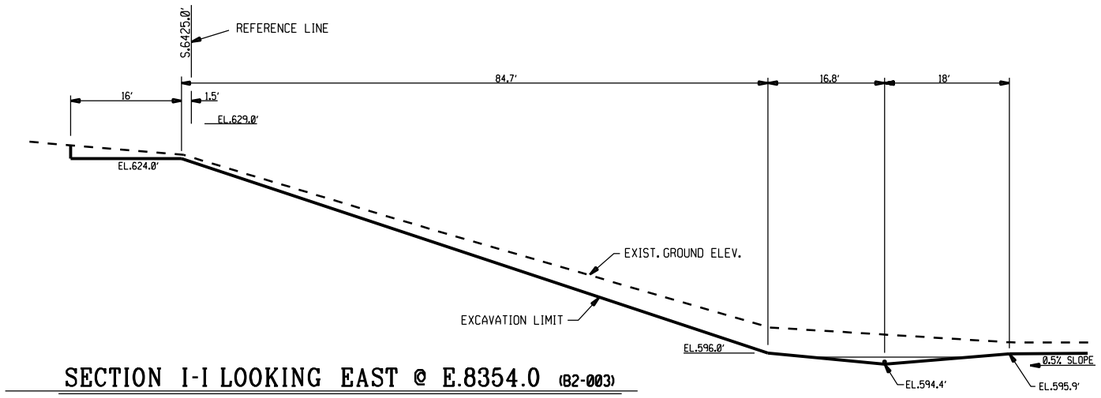

SECTION I-I LOOKING EAST @ E.8354.0 (B2-003)

SCALE: 1"=10'-0"

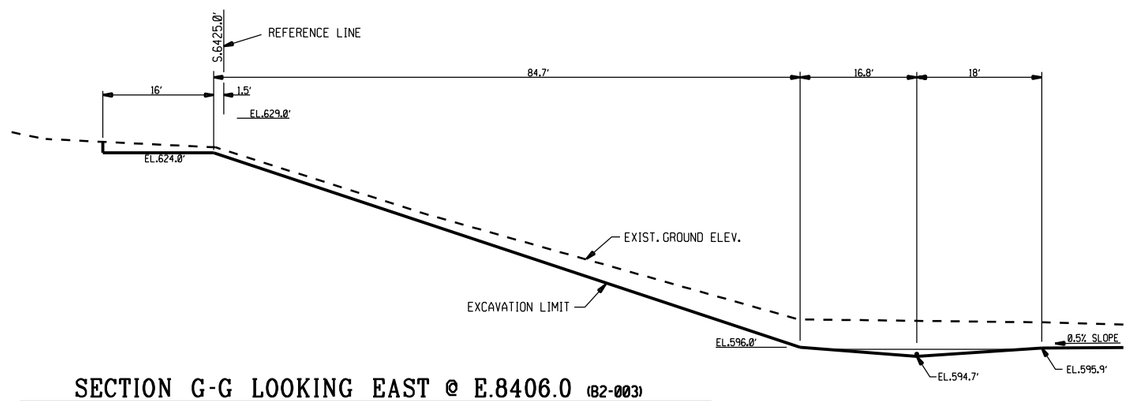

SECTION G-G LOOKING EAST @ E.8406.0 (B2-003)

SCALE: 1"=10'-0"

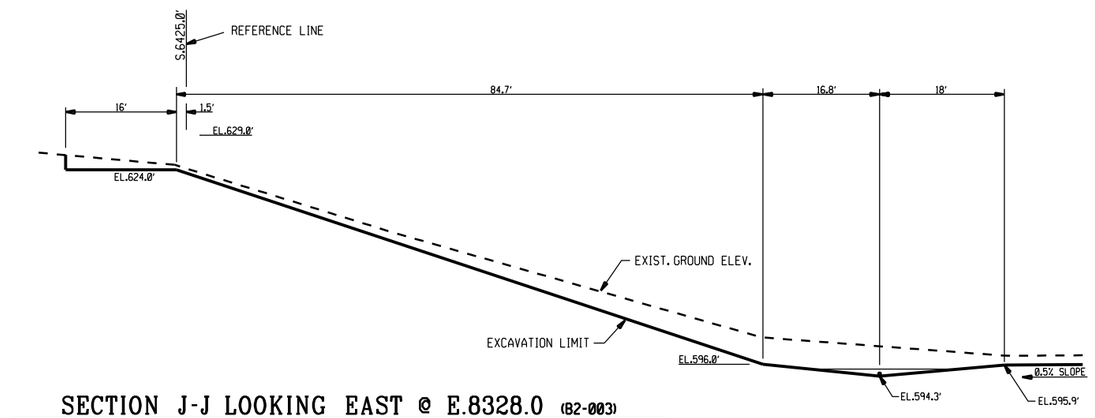

SECTION J-J LOOKING EAST @ E.8328.0 (B2-003)

SCALE: 1"=10'-0"

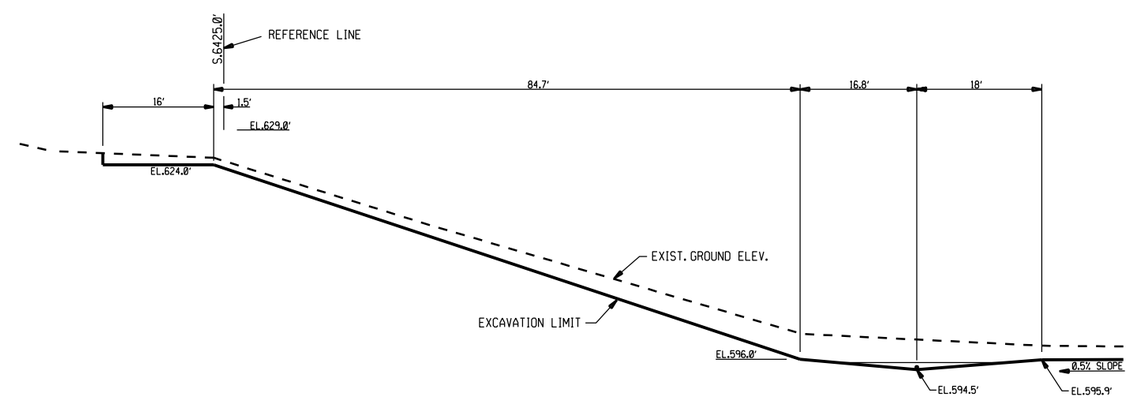

SECTION H-H LOOKING EAST @ E.8380.0 (B2-003)

SCALE: 1"=10'-0"

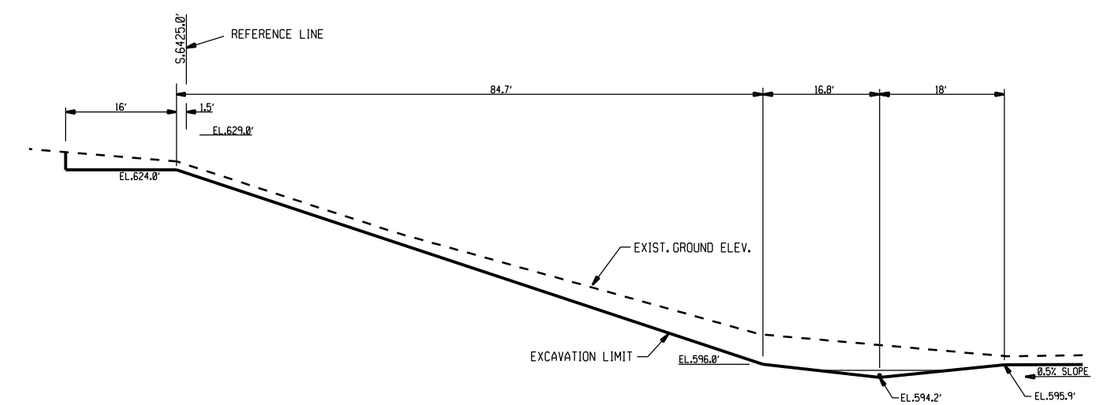

SECTION K-K LOOKING EAST @ E.8306.0 (B2-003)

SCALE: 1"=10'-0"

REV. MARK	REVISION	BY	CHK	APP	DATE
A	REVISED PER "AS-BUILT"	LEG	JJA	JJA	12/00

REV. MARK	REVISION	BY	CHK	APP	DATE

DRAWING ISSUE RECORD

ISSUE NO.	REV	MATERIAL OR JOB SPEC	BID	FAB	CONST	REF
5	A	MDEQ				1/01
4		S1302 & S1303			3/00	
3		S1303-852	1/00			
2		S1302-852	1/00			
1		MDEQ				1/7/00

DATE ISSUED FOR

DESIGNED	J.J. ALLEN	12/99
DRAWN	L.E. GIRARDIN	12/99
CHECKED	J.J.A.	12/99
APPROVED	J.J.A.	12/99
PROJ. ENGR.	D.L. WILLERTZ	12/99
MFG. REP.	K. DETRICH	12/99

STATUS | PLANT NO.

P.E. SEAL

THE DOW CHEMICAL COMPANY

MICHIGAN DIVISION — MIDLAND, MICHIGAN

SALZBURG LANDFILL — 3600 BLDG.

NORTH WALL SUBGRADE SECTIONS
CELLS 20, 21 & 22

JOB NUMBER	SCALE		REV.
852	AS NOTED	B2-007-852	A

2 UND

PRINTED | VER.

$INSTRUCTIONS $FILENAME $TIME $DATE $PERSON

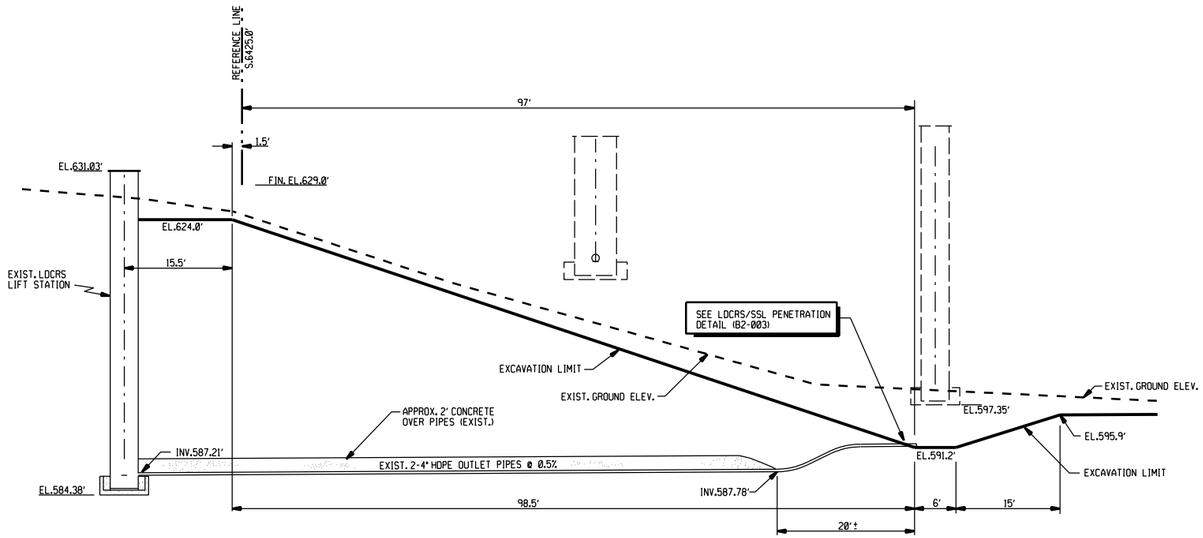

SECTION L-L LOOKING EAST @ E.8290.0 (B2-003)

SCALE: 1"=10'-0"

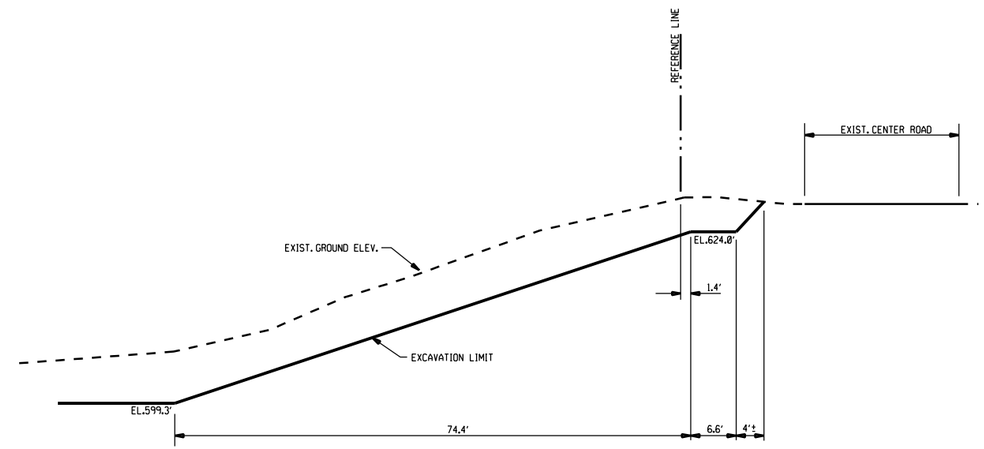

SOUTH END SECTION N-N (B2-003)

SCALE: 1"=10'-0"

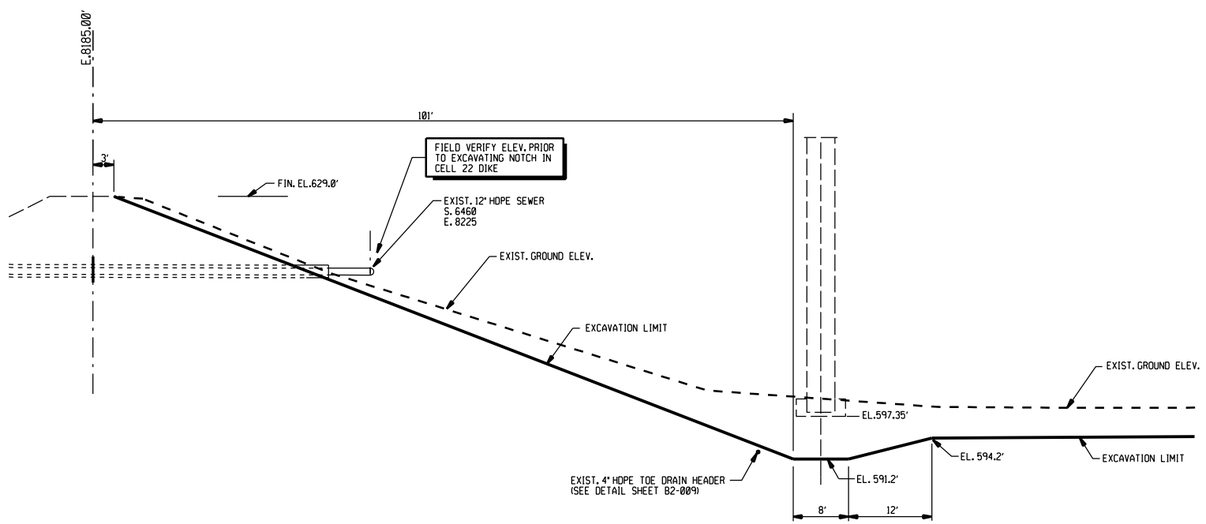

SECTION M-M LOOKING NORTH @ S.6525.0 (B2-003)

SCALE: 1"=10'-0"

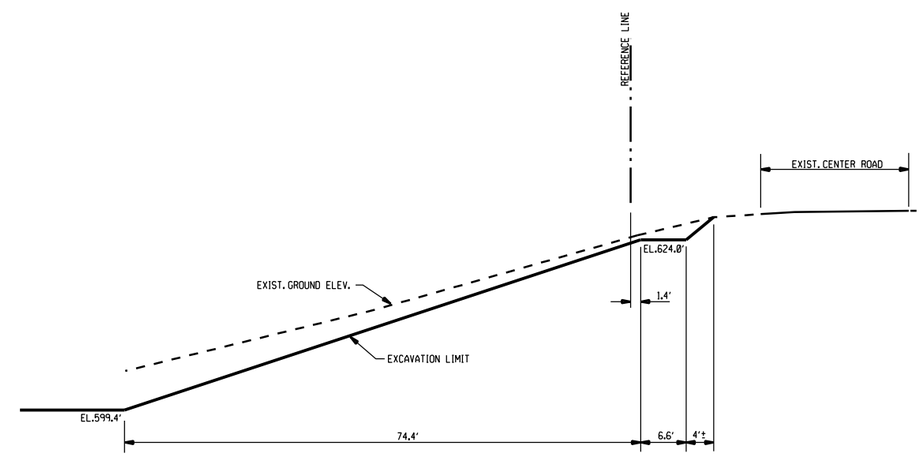

SOUTH END SECTION O-O (B2-003)

SCALE: 1"=10'-0"

REV. MARK	REVISION	BY	CHK	APP	DATE
A	REVISED PER "AS-BUILT"	LEG	JJA	JJA	12/00

REV. MARK	REVISION	BY	CHK	APP	DATE

DRAWING ISSUE RECORD

ISSUE NO.	REV	MATERIAL OR JOB SPEC	BID	FAB	CONST	REF
5	A	MDEQ				1/01
4		S1302 & S1303			3/00	
3		S1303-852	1/00			
2		S1302-852	1/00			
1		MDEQ				1/7/00

DATE ISSUED FOR

DESIGNED	J.J. ALLEN	12/99
DRAWN	L.E. GIRARDIN	12/99
CHECKED	J.J.A.	12/99
APPROVED	J.J.A.	12/99
PROJ. ENGR.	D.L. WILLERTZ	12/99
MFG. REP.	K. DETRICH	12/99

STATUS | PLANT NO.

P.E. SEAL

THE DOW CHEMICAL COMPANY

MICHIGAN DIVISION — MIDLAND, MICHIGAN

SALZBURG LANDFILL — 3600 BLDG.

SUBGRADE SECTIONS - CELLS 20, 21 & 22

JOB NUMBER	SCALE		REV.
852	1" = 10'-0"	B2-008-852	A

2 PLN

PRINTED | VER.

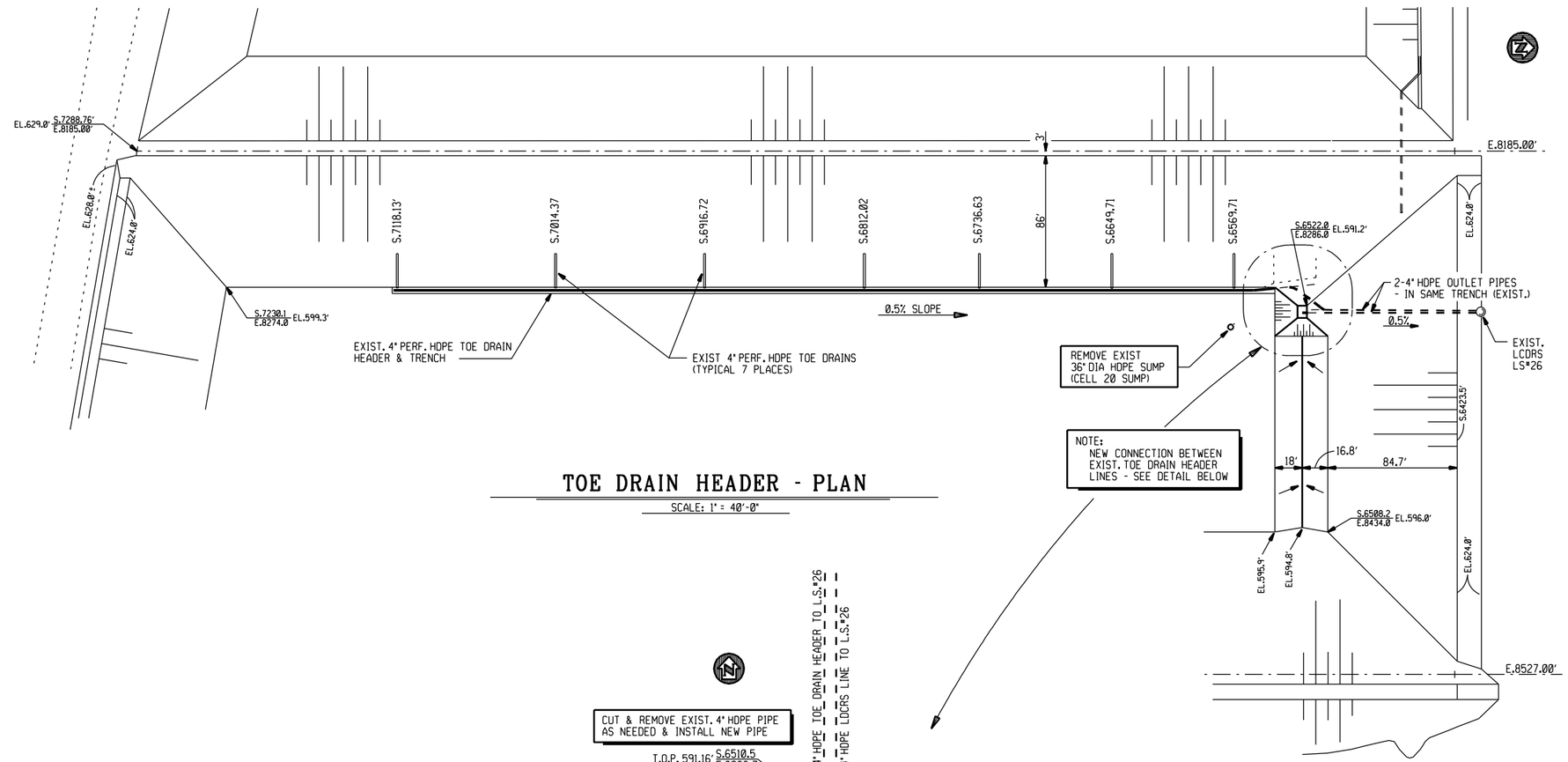

TOE DRAIN HEADER - PLAN

SCALE: 1" = 40'-0"

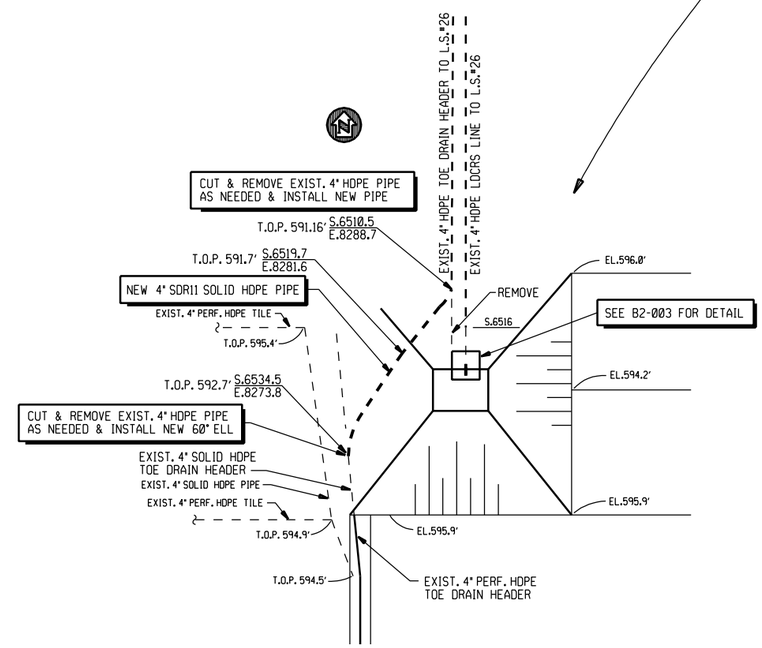

N.W. CORNER DETAIL

SCALE: 1" = 10'-0"

REV. MARK	REVISION	BY	CHK	APP	DATE
A	REVISED PER "AS-BUILT"	LEG	JJA	JJA	12/00

REV. MARK	REVISION	BY	CHK	APP	DATE

DRAWING ISSUE RECORD

ISSUE NO.	REV	MATERIAL OR JOB SPEC	BID	FAB	CONST	REF
5	A	MDEQ				1/01
4		S1302 & S1303			3/00	
3		S1303-852	1/00			
2		S1302-852	1/00			
1		MDEQ				1/7/00

DATE ISSUED FOR

DESIGNED	J.J. ALLEN	12/99
DRAWN	L.E. GIRARDIN	12/99
CHECKED	J.J.A.	12/99
APPROVED	J.J.A.	12/99
PROJ. ENGR.	D.L. WILLERTZ	12/99
MFG. REP.	K. DETRICH	12/99

STATUS | PLANT NO.
P.E. SEAL

THE DOW CHEMICAL COMPANY
MICHIGAN DIVISION — MIDLAND, MICHIGAN
SALZBURG LANDFILL — 3600 BLDG.

TOE DRAIN HEADER PLAN & DETAILS
CELLS 20, 21 & 22

JOB NUMBER	SCALE		REV.
852	AS NOTED	B2-009-852	A

2 PLN

PRINTED | VER.

$INSTRUCTIONS $FILENAME $TIME $DATE $PERSON

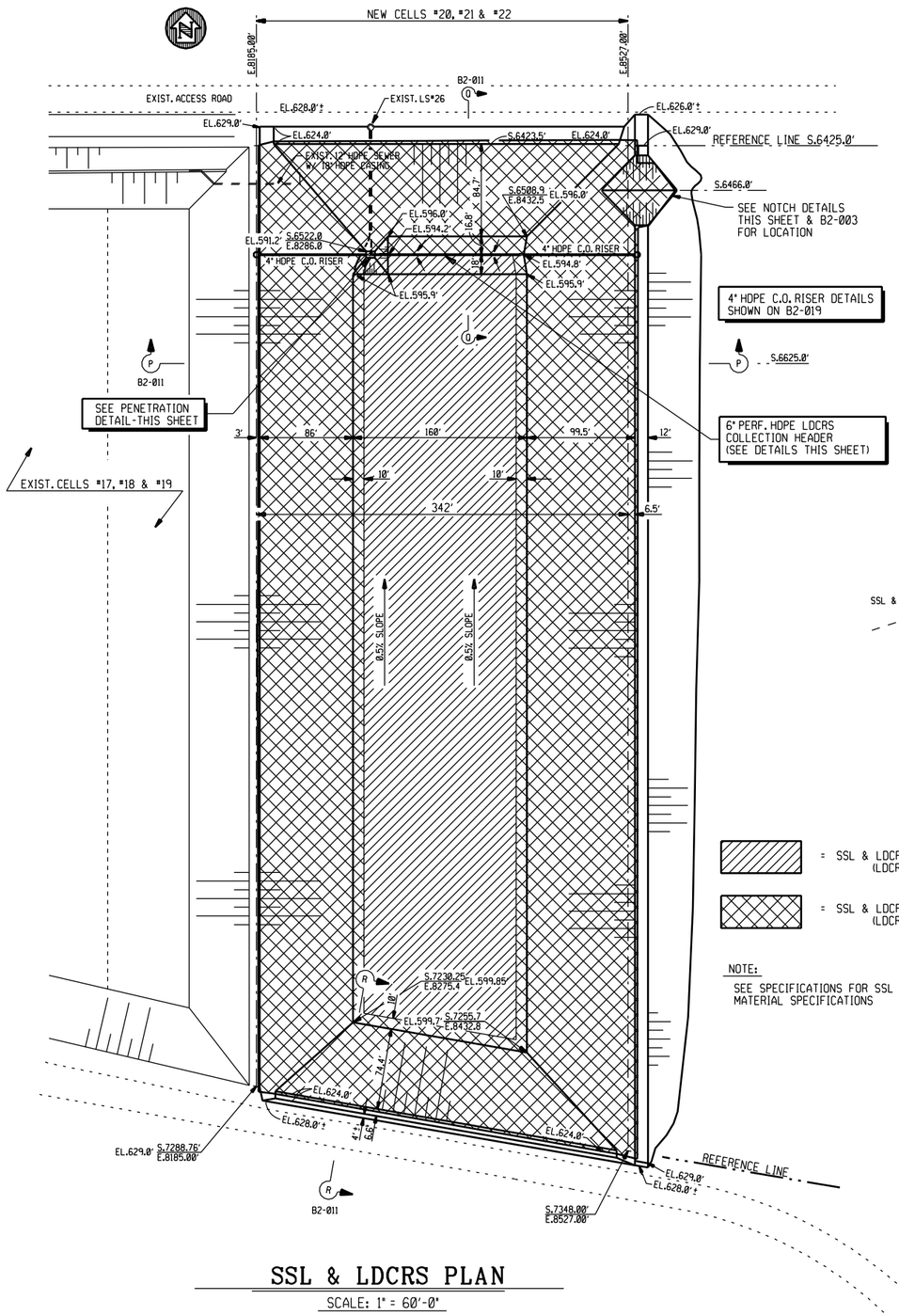

SSL & LDCRS PLAN

SCALE: 1" = 60'-0"

= SSL & LDCRS LIMITS (LDCRS = TGDM-SB)

= SSL & LDCRS LIMITS (LDCRS = TGDM-DB)

NOTE:

SEE SPECIFICATIONS FOR SSL & LDCRS MATERIAL SPECIFICATIONS

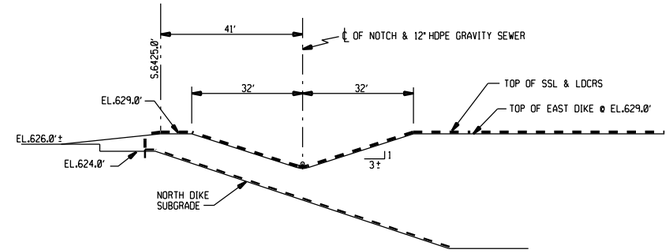

NOTCH DETAIL LOOKING EAST

SCALE: 1" = 20'-0"

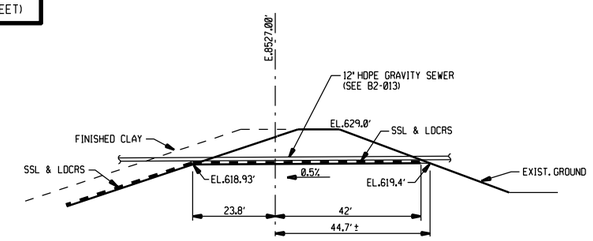

NOTCH DETAIL LOOKING NORTH

SCALE: 1" = 20'-0"

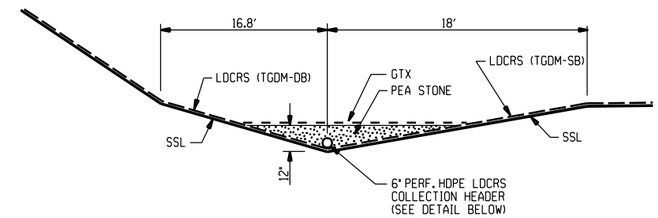

LDCRS COLLECTION HEADER DETAIL

SCALE: NONE

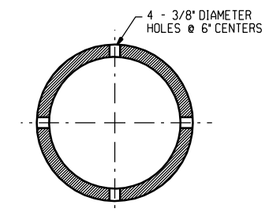

LDCRS COLLECTION HEADER
6" SDR-11 PERFORATED HDPE PIPE DETAIL

FURNISHED BY DOW

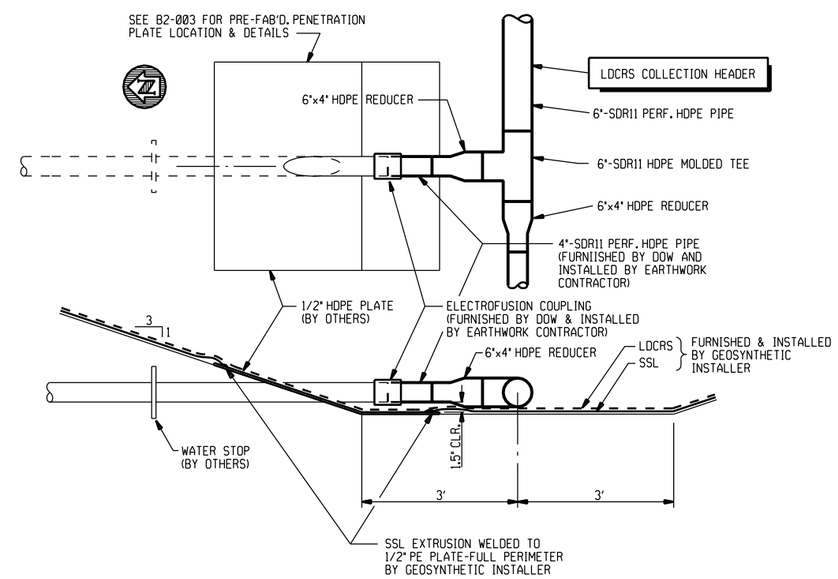

LDCRS/SSL PENETRATION DETAIL

SCALE: 3/4" = 1'-0"

LEGEND:

ALL ELEVATIONS = U.S.G.S. DATUM

HDPE = HIGH DENSITY POLYETHYLENE

GTX = GEOTEXTILE

GNT = GEONET

PERF = PERFORATED

SSL = SECONDARY SYNTHETIC LINER - 60 MIL HDPE

CCL = COMPACTED CLAY LINER

LDCRS = LEAK DETECTION, COLLECTION & REMOVAL SYSTEM

TGDM-SB = TRI-PLANAR GEONET DRAINAGE MEDIA SINGLE BONDED (GTX ONE SIDE)

TGDM-DB = TRI-PLANAR GEONET DRAINAGE MEDIA DOUBLE BONDED (GTX BOTH SIDES)

REV. MARK	REVISION	BY	CHK	APP	DATE
A	REVISED LIMITS OF SSL & LDCRS	LEG	JJA	JJA	2/14/00
B	CHANGED COLLECTION HEADER FROM 4" TO 6" AND ADDED WEST C.O. RISER	LEG	JJA	JJA	3/14/00
C	REVISED PER "AS-BUILT"	LEG	JJA	JJA	12/00
D	ADDED LINER WEIGHT & MATERIAL TO LEGEND	LEG	JJA	JJA	8/05

REV. MARK	REVISION	BY	CHK	APP	DATE

DRAWING ISSUE RECORD

ISSUE NO.	REV	MATERIAL OR JOB SPEC	BID	FAB	CONST	REF
5	A	S1302 & S1303	2/00			
4	A	MDEQ				2/00
3		S1303-852	1/00			
7	C	MDEQ			1/01	
6	B	S1302 & S1303			3/00	

DATE ISSUED FOR

DESIGNED	J.J. ALLEN	12/99
DRAWN	L.E. GIRARDIN	12/99
CHECKED	J.J.A.	12/99
APPROVED	J.J.A.	12/99
PROJ. ENGR.	D.L. WILLERTZ	12/99
MFG. REP.	K. DETRICH	12/99

STATUS: P.E. SEAL

PLANT NO.

THE DOW CHEMICAL COMPANY

MICHIGAN DIVISION — MIDLAND, MICHIGAN

SALZBURG LANDFILL — 3600 BLDG.

SSL & LDCRS PLAN - CELLS 20, 21 & 22

JOB NUMBER	SCALE		REV.
852	AS NOTED	B2-010-852	D

2 PLN

PRINTED

VER.

BY PERSON

DATE

TIME

FILENAME

INSTRUCTIONS

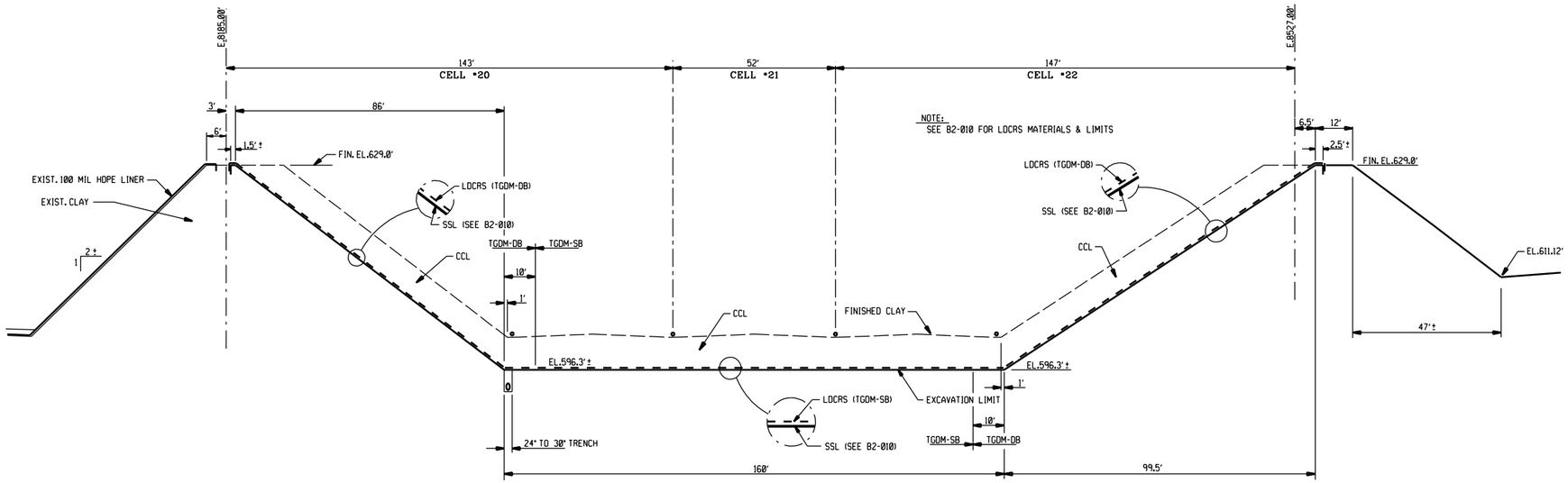

TYPICAL SECTION LOOKING NORTH (SEC P-P , B2-010)

SCALE: HORIZ. 1"=20'-0" , VERT. 1"=10'-0"

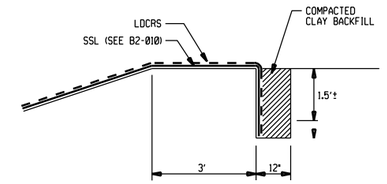

SSL & LDCRS ANCHOR TRENCH DETAIL

NORTH, EAST & WEST DIKES

SCALE: 1/2" = 1'-0"

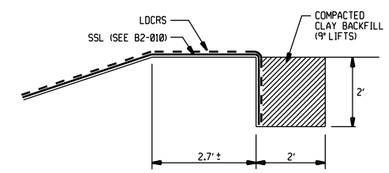

SSL & LDCRS ANCHOR TRENCH DETAIL

SOUTH DIKE

SCALE: 1/2" = 1'-0"

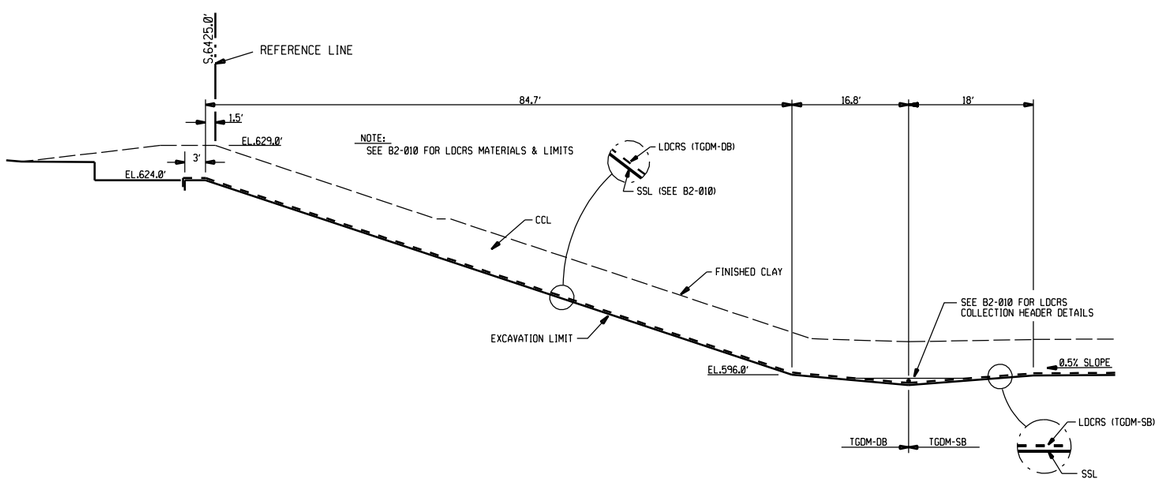

TYPICAL NORTH END SECTION (LOOKING EAST) (SEC Q-Q , B2-010)

SCALE: 1"=10'-0"

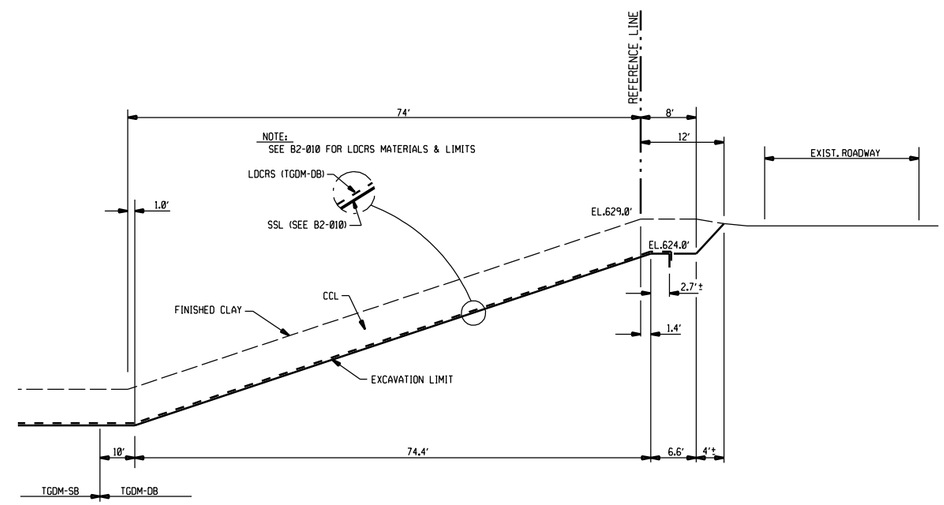

TYPICAL SOUTH END SECTION (LOOKING EAST) (SEC R-R , B2-010)

SCALE: 1"=10'-0"

REV. MARK	REVISION	BY	CHK	APP	DATE
A	REVISED ANCHOR TRENCH	LEG	JJA	JJA	2/14/00
B	REVISED PER "AS-BUILT"	LEG	JJA	JJA	12/00
C	ADDED REFERENCE TO SSL MATERIAL	LEG	JJA	JJA	8/05

REV. MARK	REVISION	BY	CHK	APP	DATE

DRAWING ISSUE RECORD

ISSUE NO.	REV	MATERIAL OR JOB SPEC	BID	FAB	CONST	REF
5	A	S1302 & S1303	2/00			
4	A	MDEQ				2/00
3		S1303-852	1/00			
7	B	MDEQ				1/01
6	A	S1302 & S1303			3/00	

DATE ISSUED FOR

DESIGNED	J.J. ALLEN	12/99
DRAWN	L.E. GIRARDIN	12/99
CHECKED	J.J.A.	12/99
APPROVED	J.J.A.	12/99
PROJ. ENGR.	D.L. WILLERTZ	12/99
MFG. REP.	K. DETRICH	12/99

STATUS | PLANT NO.

P.E. SEAL

THE DOW CHEMICAL COMPANY

MICHIGAN DIVISION — MIDLAND, MICHIGAN

SALZBURG LANDFILL — 3600 BLDG.

SSL & LDCRS SECTIONS - CELLS 20, 21 & 22

JOB NUMBER	SCALE		REV.
852	AS NOTED	B2-011-852	C

2 PLN

PRINTED | VER.

$INSTRUCTIONS $FILENAME $TIME $DATE $PERSON

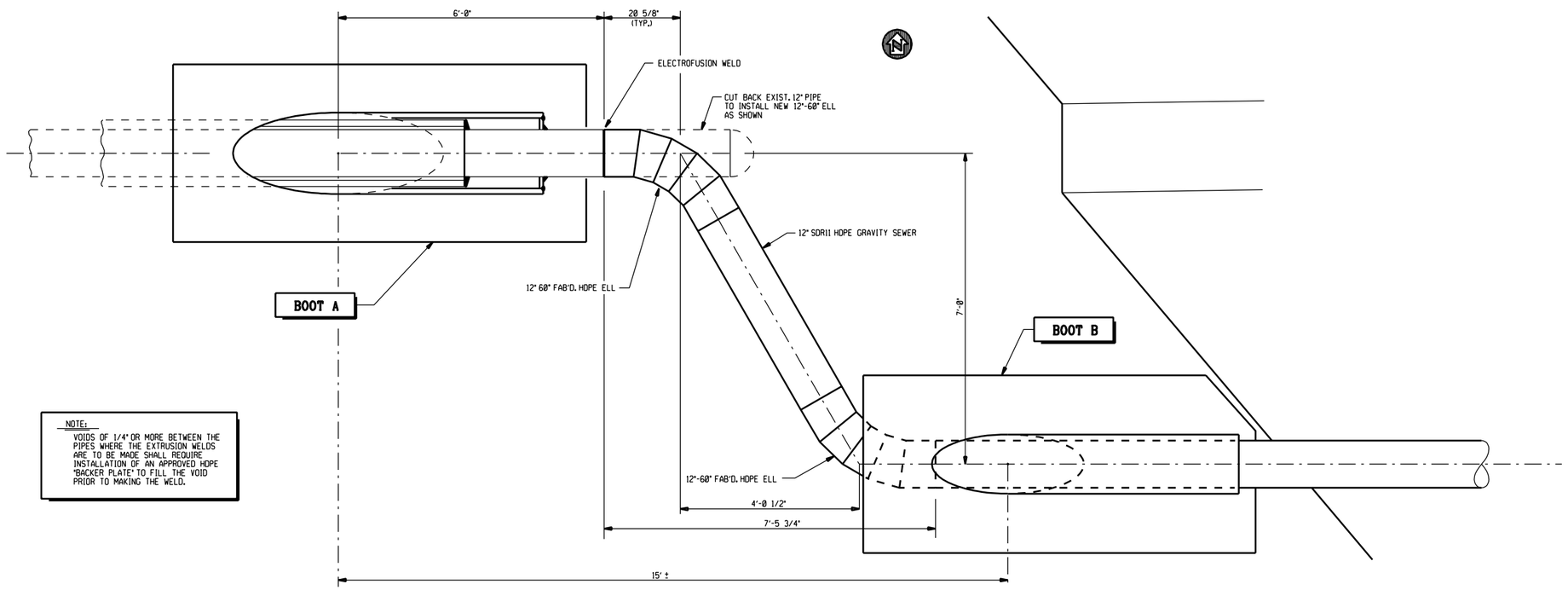

NOTE:
VOIDS OF 1/4" OR MORE BETWEEN THE PIPES WHERE THE EXTRUSION WELDS ARE TO BE MADE SHALL REQUIRE INSTALLATION OF AN APPROVED HDPE "BACKER PLATE" TO FILL THE VOID PRIOR TO MAKING THE WELD.

12" GRAVITY SEWER BOOT ASSEMBLY PLAN FOR CELL 20 DIKE

SCALE: 3/4" = 1'-0"

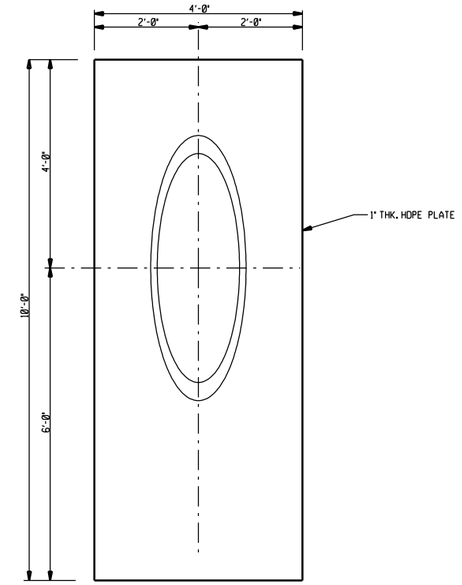

BOOT A DETAIL

SCALE: 3/4" = 1'-0"

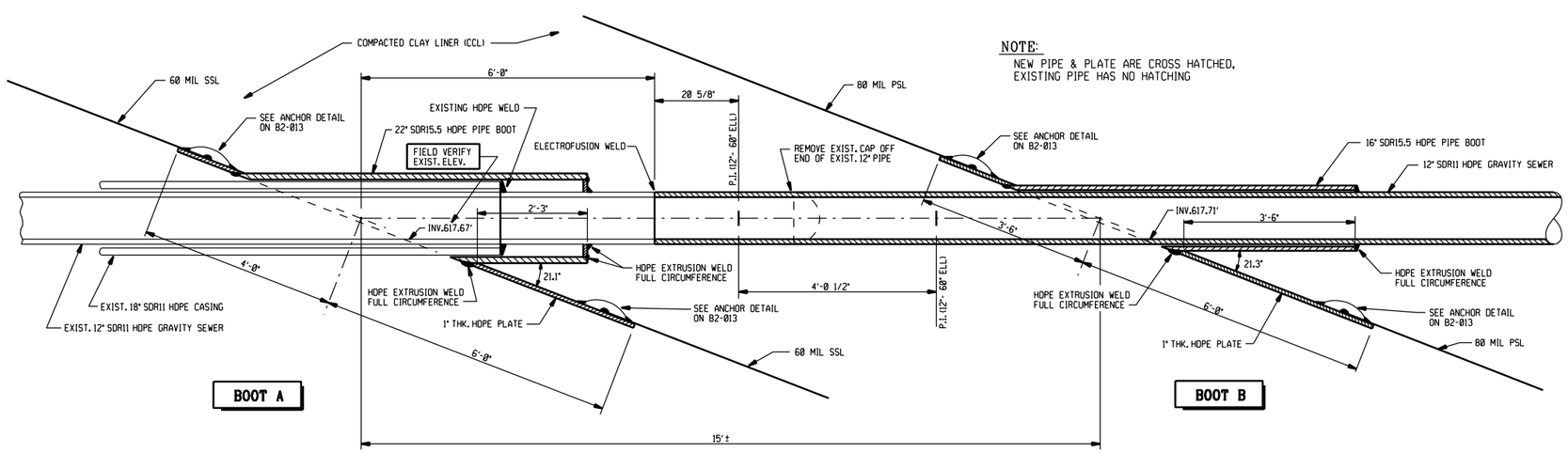

NOTE:
NEW PIPE & PLATE ARE CROSS HATCHED, EXISTING PIPE HAS NO HATCHING

PRIMARY SYNTHETIC LINER (PSL), SECONDARY SYNTHETIC LINER (SSL) & 12" GRAVITY SEWER BOOT ASSEMBLY DETAIL FOR CELL 20 DIKE

SCALE: 3/4" = 1'-0"

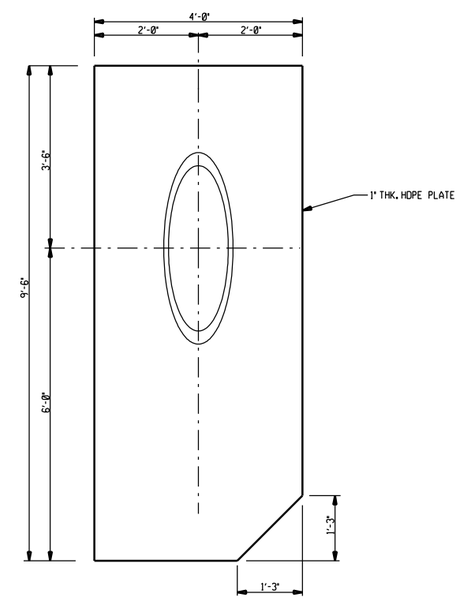

BOOT B DETAIL

SCALE: 3/4" = 1'-0"

REV. MARK	REVISION	BY	CHK	APP	DATE
A	REVISED PER "AS-BUILT"	LEG	JJA	JJA	12/00

REV. MARK	REVISION	BY	CHK	APP	DATE

DRAWING ISSUE RECORD

ISSUE NO.	REV	MATERIAL OR JOB SPEC	BID	FAB	CONST	REF
5	A	MDEQ				1/01
4		S1302 & S1303			3/00	
3		S1303-852	1/00			
2		S1302-852	1/00			
1		MDEQ				1/7/00

DATE ISSUED FOR

DESIGNED	J.J. ALLEN	12/99
DRAWN	L.E. GIRARDIN	12/99
CHECKED	J.J.A.	12/99
APPROVED	J.J.A.	12/99
PROJ. ENGR.	D.L. WILLERTZ	12/99
MFG. REP.	K. DETRICH	12/99

STATUS | PLANT NO.
P.E. SEAL

THE DOW CHEMICAL COMPANY
MICHIGAN DIVISION — MIDLAND, MICHIGAN
SALZBURG LANDFILL — 3600 BLDG.

12" GRAVITY SEWER - BOOT DETAILS
CELLS 20, 21 & 22

JOB NUMBER	SCALE		REV.
852	AS NOTED	B2-012-852	A

2 PLN

PRINTED | VER.

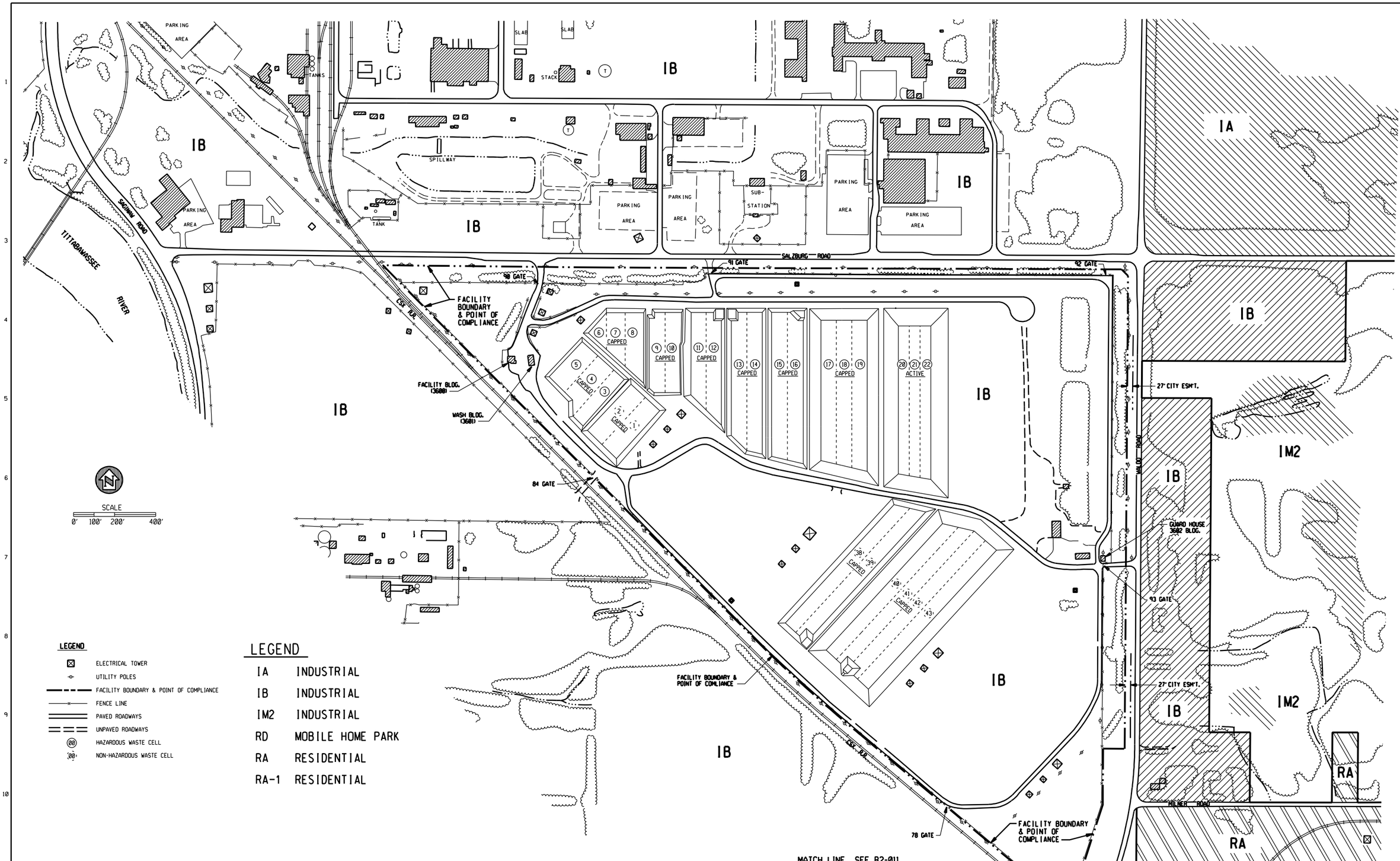

REV. MARK	REVISION	BY	CHK	APP	DATE
A	ADDED REFERENCE TO POINT OF COMPLIANCE	LEG	JJA	JJA	9/08

REV. MARK	REVISION	BY	CHK	APP	DATE

DRAWING ISSUE RECORD

ISSUE NO.	REV	MATERIAL OR JOB SPEC	BID	FAB	CONST	REF
			DATE ISSUED FOR			

DESIGNED	J.J. ALLEN	11/05
DRAWN	L.E. GIRARDIN	11/05
CHECKED	J.J.A.	11/05
APPROVED	J.J.A.	11/05
PROJ. ENGR.	J.J. ALLEN	11/05
MFG. REP.	STEVE LUCAS	11/05

STATUS PLANT NO.
P.E. SEAL

THE DOW CHEMICAL COMPANY
MICHIGAN DIVISION MIDLAND, MICHIGAN
SALZBURG LANDFILL 3600 BLDG

FIGURE 11.P-3
SURROUNDING LAND USES MAP
(SHEET 1 OF 2)

EJN NUMBER	SCALE		REV.
114291	1" = 200'-0"	B2-102-1374	A

2 PLN

PRINTED VER.

$INSTRUCTIONS $FILENAME $TIME $DATE $PERSON

BOOT C

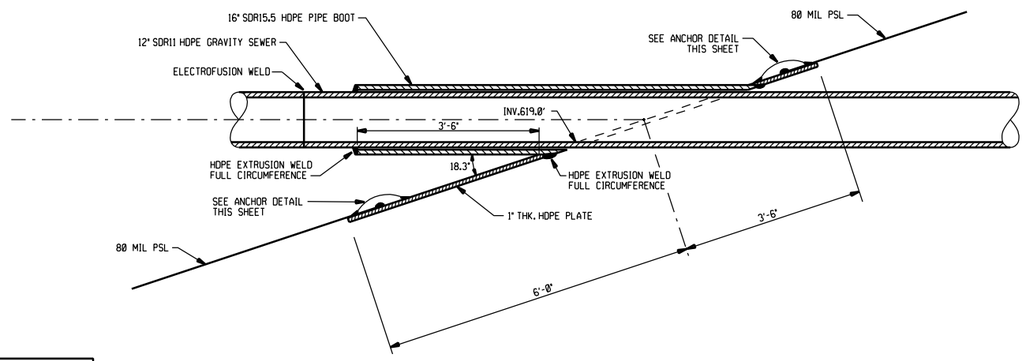

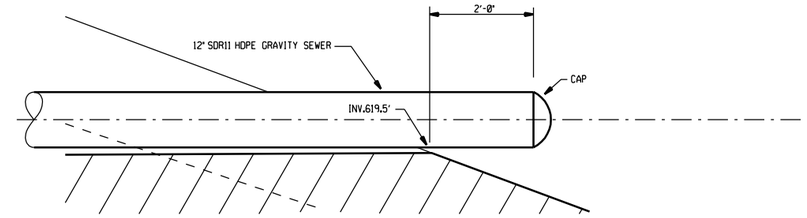

NOTE:
VOIDS OF 1/4" OR MORE BETWEEN THE PIPES WHERE THE EXTRUSION WELDS ARE TO BE MADE SHALL REQUIRE INSTALLATION OF AN APPROVED HDPE "BACKER PLATE" TO FILL THE VOID PRIOR TO MAKING THE WELD.

12" GRAVITY SEWER BOOT ASSEMBLY DETAIL FOR CELL 22 DIKE

SCALE: 3/4" = 1'-0"

NOTE: EARTHWORK CONTRACTOR RESPONSIBLE FOR 1" HDPE PLATE. GEOSYNTHETIC INSTALLER RESPONSIBLE FOR ALL PSL, SSL & EXTRUSION WELDS.

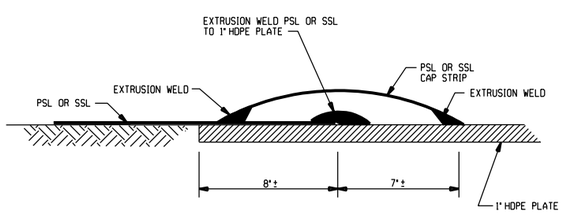

ANCHOR DETAIL

SCALE: 3" = 1'-0"

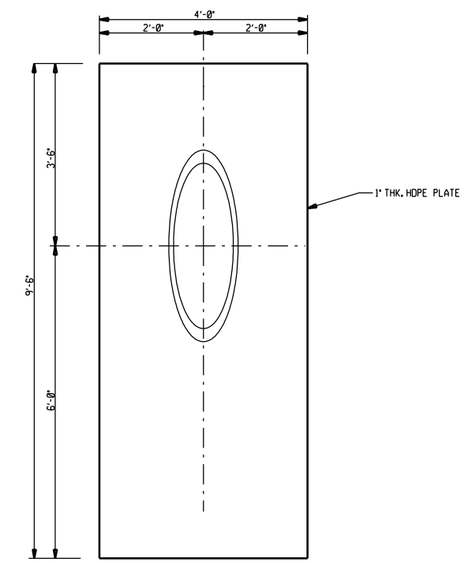

BOOT C DETAIL

SCALE: 3/4" = 1'-0"

REV. MARK	REVISION	BY	CHK	APP	DATE
A	REVISED PER "AS-BUILT"	LEG	JJA	JJA	12/00

REV. MARK	REVISION	BY	CHK	APP	DATE

DRAWING ISSUE RECORD

ISSUE NO.	REV	MATERIAL OR JOB SPEC	BID	FAB	CONST	REF
5	A	MDEQ				1/01
4		S1302 & S1303			3/00	
3		S1303-852	1/00			
2		S1302-852	1/00			
1		MDEQ				1/7/00

DATE ISSUED FOR

DESIGNED	J.J. ALLEN	12/99
DRAWN	L.E. GIRARDIN	12/99
CHECKED	J.J.A.	12/99
APPROVED	J.J.A.	12/99
PROJ. ENGR.	D.L. WILLERTZ	12/99
MFG. REP.	K. DETRICH	12/99

STATUS | PLANT NO.
P.E. SEAL

THE DOW CHEMICAL COMPANY
MICHIGAN DIVISION — MIDLAND, MICHIGAN
SALZBURG LANDFILL — 3600 BLDG.

12" GRAVITY SEWER - BOOT DETAILS
CELLS 20, 21 & 22

JOB NUMBER	SCALE		REV.
852	AS NOTED	B2-013-852	A

2 PLN

PRINTED | VER.

$PERSON $DATE $TIME $FILENAME $INSTRUCTIONS

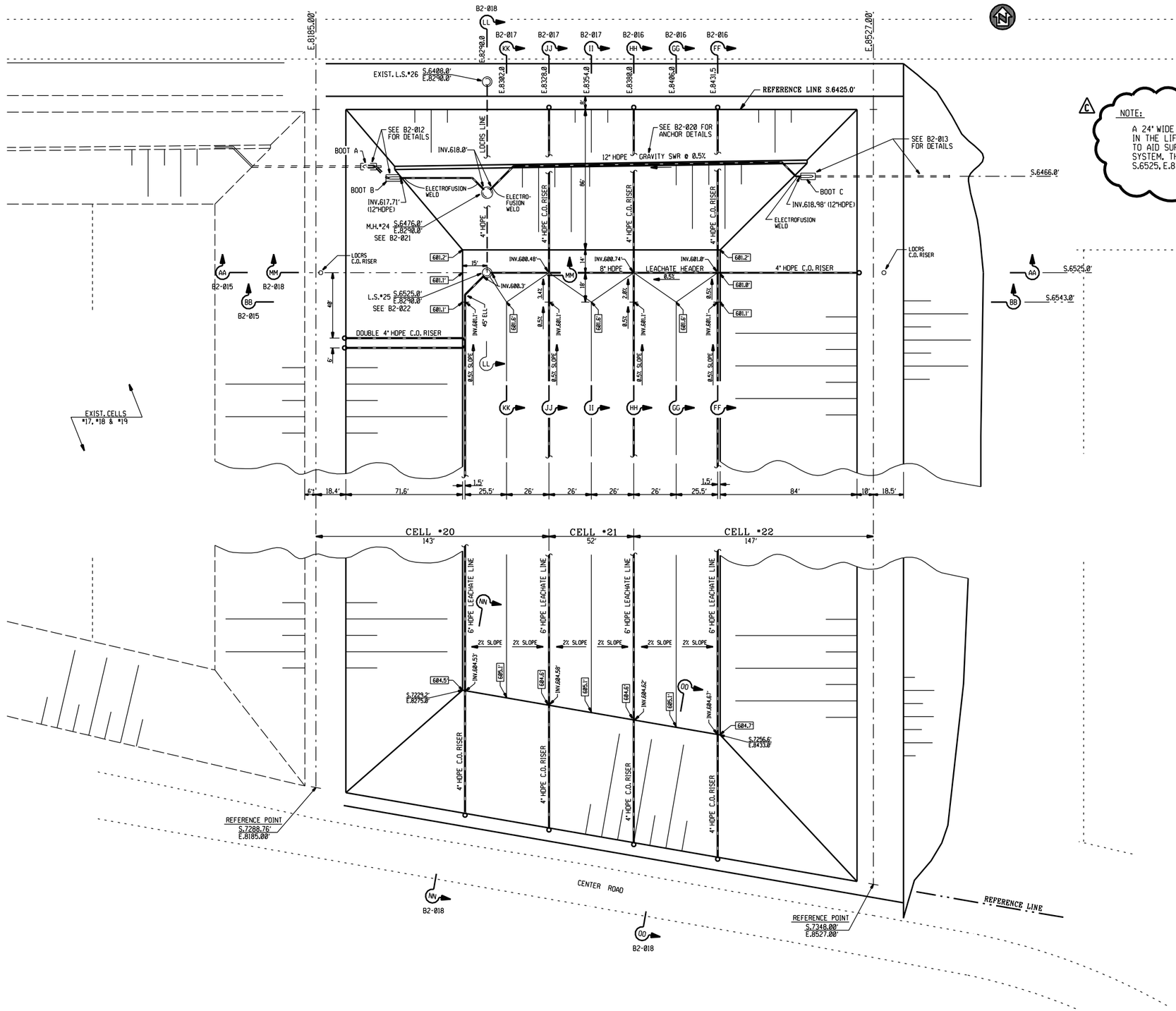

NOTE:

A 24" WIDE COLUMN OF 6A NATURAL STONE WAS INSTALLED IN THE LIFT- A FILL, DIRECTLY OVER THE 8" LEACHATE HEADER TO AID SURFACE WATER RUNOFF TO THE LEACHATE COLLECTION SYSTEM. THE COLUMN IS APPROX. 8' DEEP AND EXTENDS FROM S.6525, E.8315 TO S.6525, E.8431 AND WAS INSTALLED ON 8/30/06

NOTES:

1. SEE B2-019 FOR 4" C.O. RISER & PERFORATED PIPE DETAILS
2. ABOVE GROUND PIPNIG IS NOT SHOWN ON THIS SHEET. (SEE B4-... DRAWINGS)
3. 000.0 - ELEV'S. IN BOXES ARE FINISH CLAY ELEV'S.
4. SEE B2-015 FOR PSL ANCHOR TRENCH DETAIL
5. SEE B2-020 FOR TOP OF DIKE EROSION PROTECTION DETAILS AND SIDEWALL LCRS TIRE ANCHORAGE DETAIL
6. SEE B2-020 FOR CELL 23 DIKE EROSION PROTECTION DETAILS
7. SEE B2-020 FOR CELL SIDEWALL DRAINAGE (STANDPIPE DETAIL & LOCATIONS)

REV. MARK	REVISION	BY	CHK	APP	DATE
A	REVISED PER "AS-BUILT"	LEG	JJA	JJA	12/00
B	ADDED NOTE 7 (REFERENCE TO STANDPIPE DETAILS)	LEG	JJA		10/02
C	ADDED NOTE REFERING TO 2' WIDE COLUMN OF DRAINAGE STONE PLACED IN LIFT A FILL ON 8/30/06	LEG	JJA		10/06

DRAWING ISSUE RECORD

ISSUE NO.	REV	MATERIAL OR JOB SPEC	BID	FAB	CONST	REF
5	A	MDEQ				1/01
4		S1302 & S1303			3/00	
3		S1303-852	1/00			
2		S1302-852	1/00			
1		MDEQ				1/7/00

DATE ISSUED FOR

DESIGNED	J.J. ALLEN	12/99
DRAWN	L.E. GIRARDIN	12/99
CHECKED	J.J.A.	12/99
APPROVED	J.J.A.	12/99
PROJ. ENGR.	D.L. WILLERTZ	12/99
MFG. REP.	K. DETRICH	12/99

STATUS | PLANT NO. | P.E. SEAL

THE DOW CHEMICAL COMPANY

MICHIGAN DIVISION — MIDLAND, MICHIGAN

SALZBURG LANDFILL — 3600 BLDG.

FINISH CLAY & LEACHATE PIPING PLAN
CELLS 20, 21 & 22

JOB NUMBER 852 | SCALE 1" = 30'-0" | B2-014-852 | REV. C | 2 UND

PRINTED | VER.

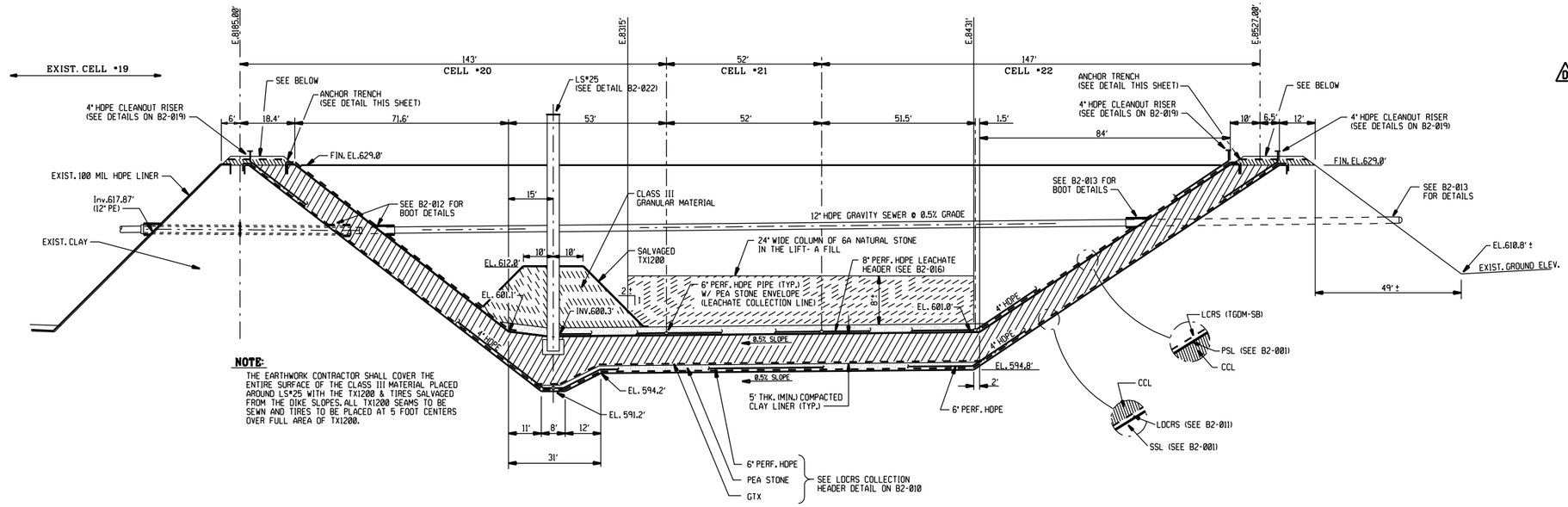

NOTE:
THE EARTHWORK CONTRACTOR SHALL COVER THE ENTIRE SURFACE OF THE CLASS III MATERIAL PLACED AROUND LS#25 WITH THE TX1200 & TIRES SALVAGED FROM THE DIKE SLOPES. ALL TX1200 SEAMS TO BE SEWN AND TIRES TO BE PLACED AT 5 FOOT CENTERS OVER FULL AREA OF TX1200.

SECTION AA-AA LOOKING NORTH @ S.6525.0' (B2-014)

SCALE: HORIZ. 1"=20'-0", VERT. 1"=10'-0"

NOTE:
A 24" WIDE COLUMN OF 6A NATURAL STONE WAS INSTALLED IN THE LIFT- A FILL, DIRECTLY OVER THE 8" LEACHATE HEADER TO AID SURFACE WATER RUNOFF TO THE LEACHATE COLLECTION SYSTEM. THE COLUMN IS APPROX. 8' DEEP AND EXTENDS FROM S.6525, E.8315 TO S.6525, E.8431 AND WAS INSTALLED ON 8/30/06

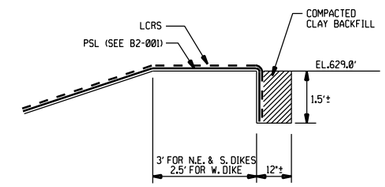

PSL & LCRS ANCHOR TRENCH DETAIL

SCALE: 1/2" = 1'-0"

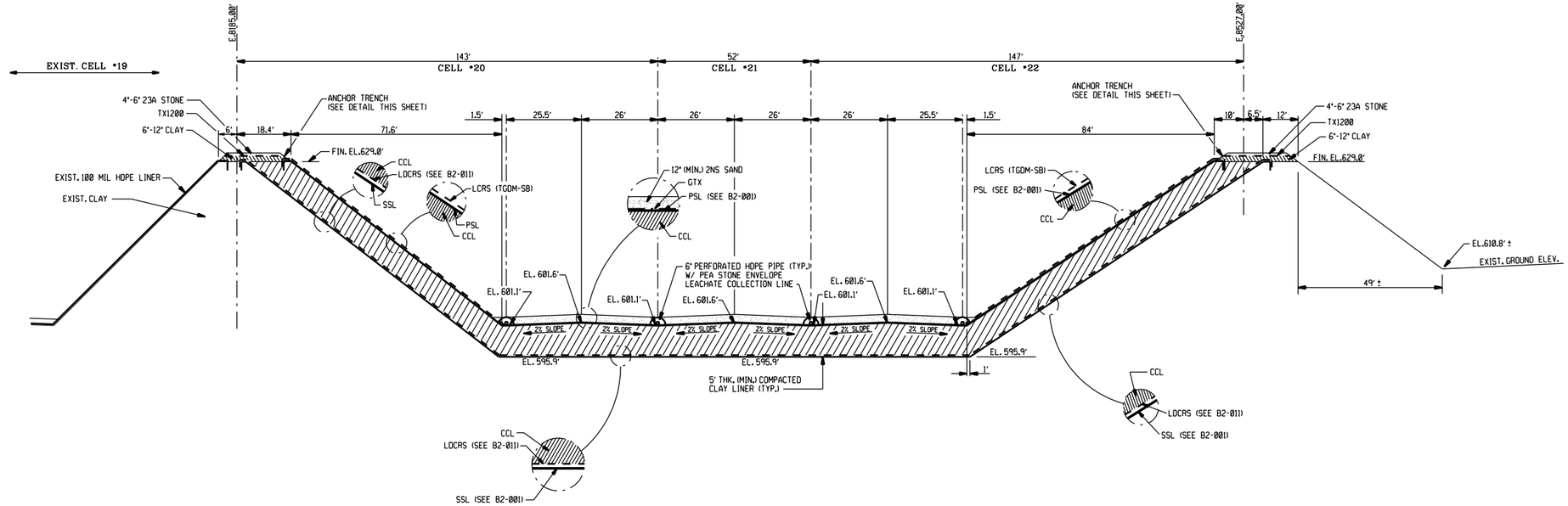

SECTION BB-BB LOOKING NORTH @ S.6543.0' (B2-014)

SCALE: HORIZ. 1"=20'-0", VERT. 1"=10'-0"

REV. MARK	REVISION	BY	CHK	APP	DATE
A	REVISED ANCHOR TRENCH	LEG	JJA	JJA	2/14/00
B	REVISED PER "AS-BUILT"	LEG	JJA	JJA	12/00
C	ADDED REFERENCE TO SSL & PSL MATERIALS	LEG	JJA	JJA	8/05
D	ADDED 2' WIDE COLUMN OF DRAINAGE STONE TO BE PLACED IN LIFT A FILL ON 8/30/06	LEG	JJA		10/06

REV. MARK	REVISION	BY	CHK	APP	DATE

DRAWING ISSUE RECORD

ISSUE NO.	REV	MATERIAL OR JOB SPEC	BID	FAB	CONST	REF
5	A	S1302 & S1303	2/00			
4	A	MDEQ				2/00
3		S1303-852	1/00			
7	B	MDEQ				1/01
6	A	S1302 & S1303			3/00	

DATE ISSUED FOR

DESIGNED	J.J. ALLEN	12/99
DRAWN	L.E. GIRARDIN	12/99
CHECKED	J.J.A.	12/99
APPROVED	J.J.A.	12/99
PROJ. ENGR.	D.L. WILLERTZ	12/99
MFG. REP.	K.DETRICH	12/99

STATUS | PLANT NO.
P.E. SEAL

THE DOW CHEMICAL COMPANY
MICHIGAN DIVISION — MIDLAND, MICHIGAN
SALZBURG LANDFILL — 3600 BLDG.

TYPICAL SECTIONS - CELLS 20, 21 & 22

JOB NUMBER	SCALE		REV.
852	AS NOTED	B2-015-852	D

PRINTED | VER.
2 UND

SPERSON ~ DATE ~ TIME ~ FILENAME ~ INSTRUCTIONS

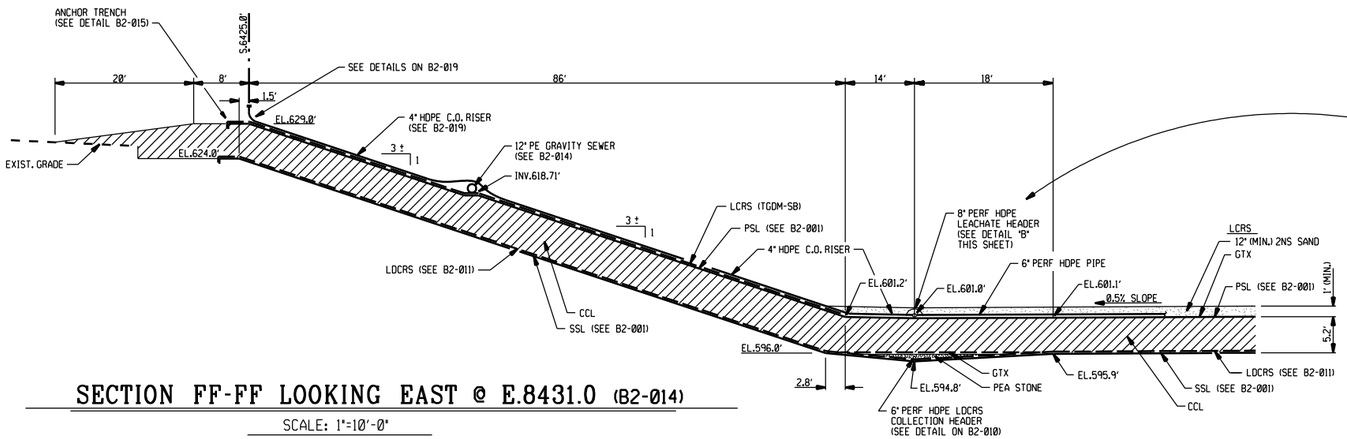

SECTION FF-FF LOOKING EAST @ E.8431.0 (B2-014)

SCALE: 1"=10'-0"

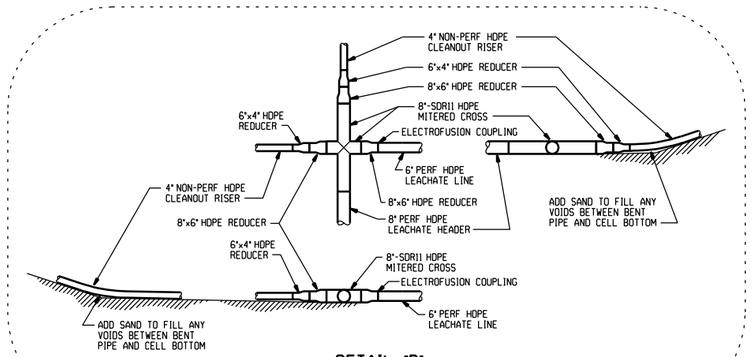

DETAIL "B"

TYPICAL @ SECTION FF-FF

SCALE: 1/4" = 1'-0"

NOTE:
SEE LEACHATE COLLECTION LINE &
LEACHATE COLLECTION HEADER
DETAILS ON B2-019

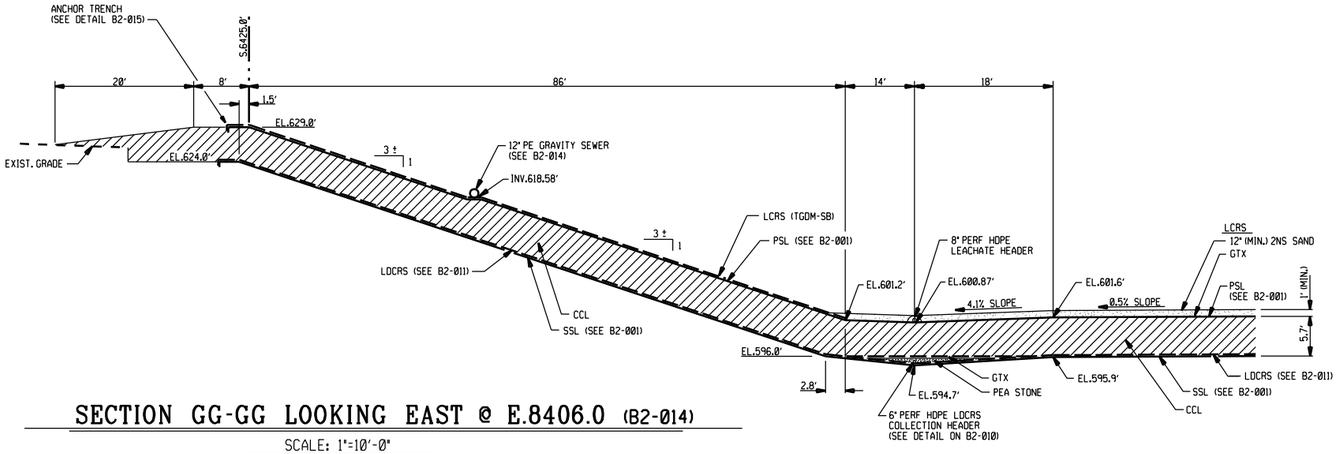

SECTION GG-GG LOOKING EAST @ E.8406.0 (B2-014)

SCALE: 1"=10'-0"

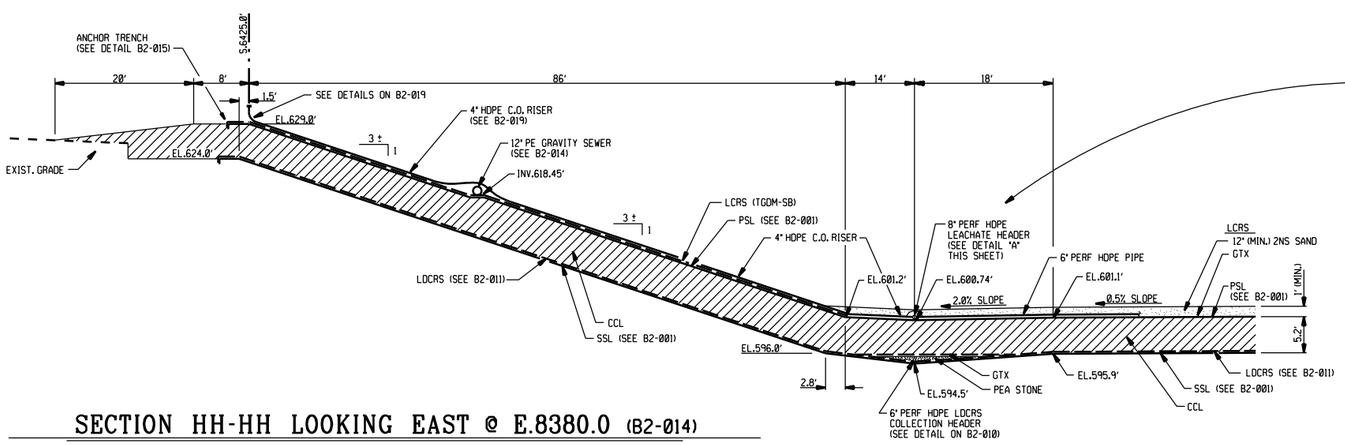

SECTION HH-HH LOOKING EAST @ E.8380.0 (B2-014)

SCALE: 1"=10'-0"

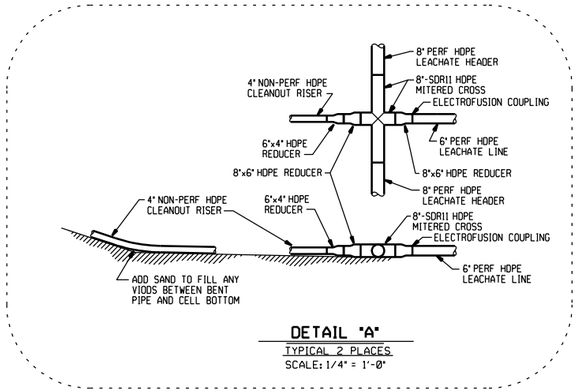

DETAIL "A"

TYPICAL 2 PLACES

SCALE: 1/4" = 1'-0"

REV. MARK	REVISION	BY	CHK	APP	DATE
A	CHANGED LDCRS COLLECTION HEADER FROM 4" TO 6" AND REVISED DETAILS "A" & "B"	LEG	JJA	JJA	3/14/00
B	REVISED PER "AS-BUILT"	LEG	JJA	JJA	12/00
C	ADDED REFERENCE TO SSL & PSL MATERIALS	LEG	JJA	JJA	8/05

REV. MARK	REVISION	BY	CHK	APP	DATE

DRAWING ISSUE RECORD

ISSUE NO.	REV	MATERIAL OR JOB SPEC	BID	FAB	CONST	REF
5	B	MDEQ				1/01
4	A	S1302 & S1303			3/00	
3		S1303-852	1/00			
2		S1302-852	1/00			
1		MDEQ				1/7/00

DATE ISSUED FOR

DESIGNED	J.J. ALLEN	12/99
DRAWN	L.E. GIRARDIN	12/99
CHECKED	J.J.A.	12/99
APPROVED	J.J.A.	12/99
PROJ. ENGR.	D.L. WILLERTZ	12/99
MFG. REP.	K. DETRICH	12/99

STATUS | PLANT NO.
P.E. SEAL

THE DOW CHEMICAL COMPANY

MICHIGAN DIVISION — MIDLAND, MICHIGAN

SALZBURG LANDFILL — 3600 BLDG.

NORTH WALL SECTIONS
CELLS 20, 21 & 22

JOB NUMBER	SCALE		REV.
852	AS NOTED	B2-016-852	C

2 UND

PRINTED | VER.

STRUCTIONS — DATE — TIME — FILENAME — PERSON

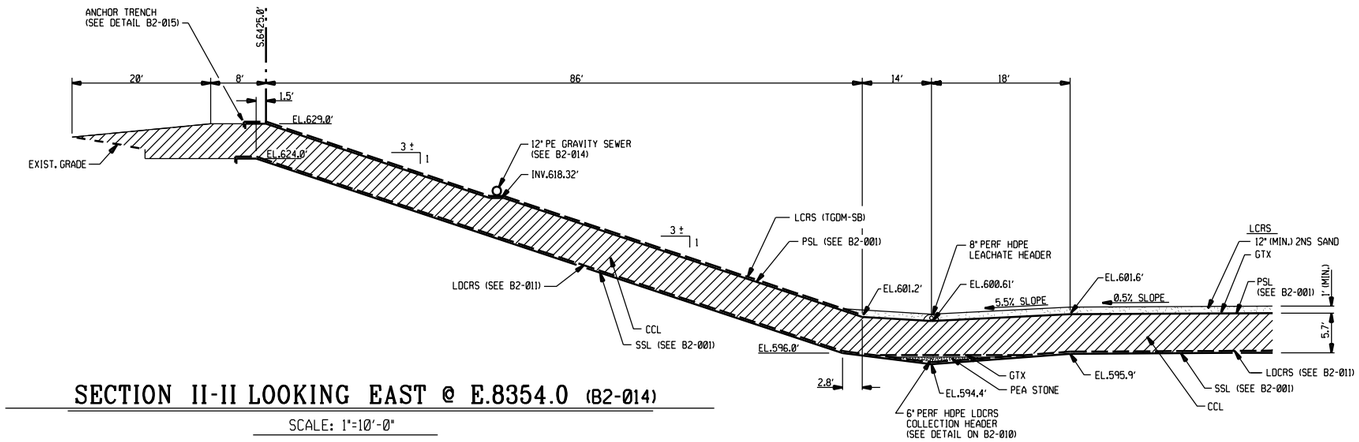

SECTION II-II LOOKING EAST @ E.8354.0 (B2-014)

SCALE: 1"=10'-0"

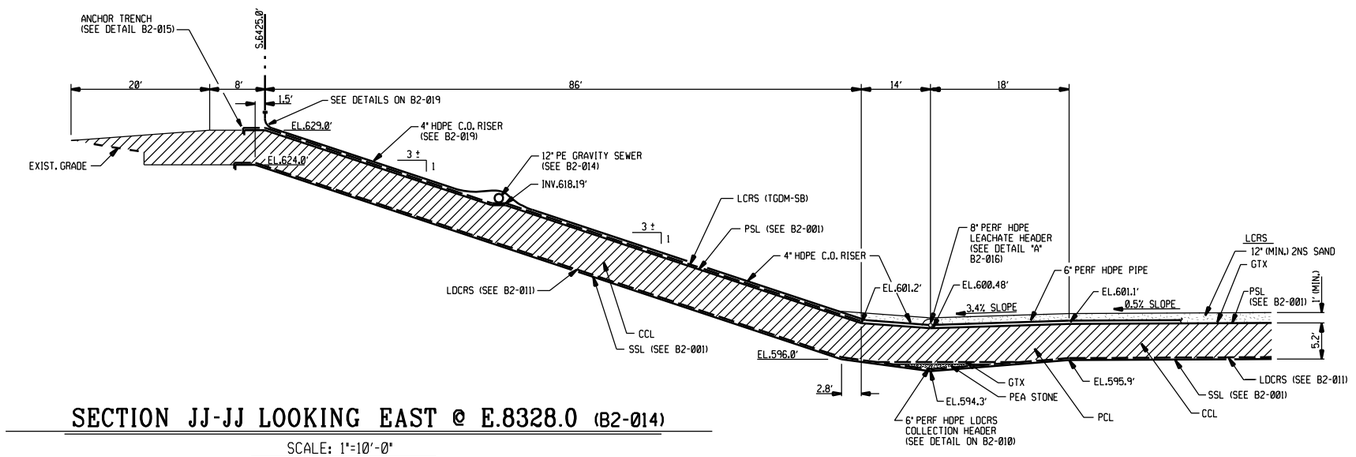

SECTION JJ-JJ LOOKING EAST @ E.8328.0 (B2-014)

SCALE: 1"=10'-0"

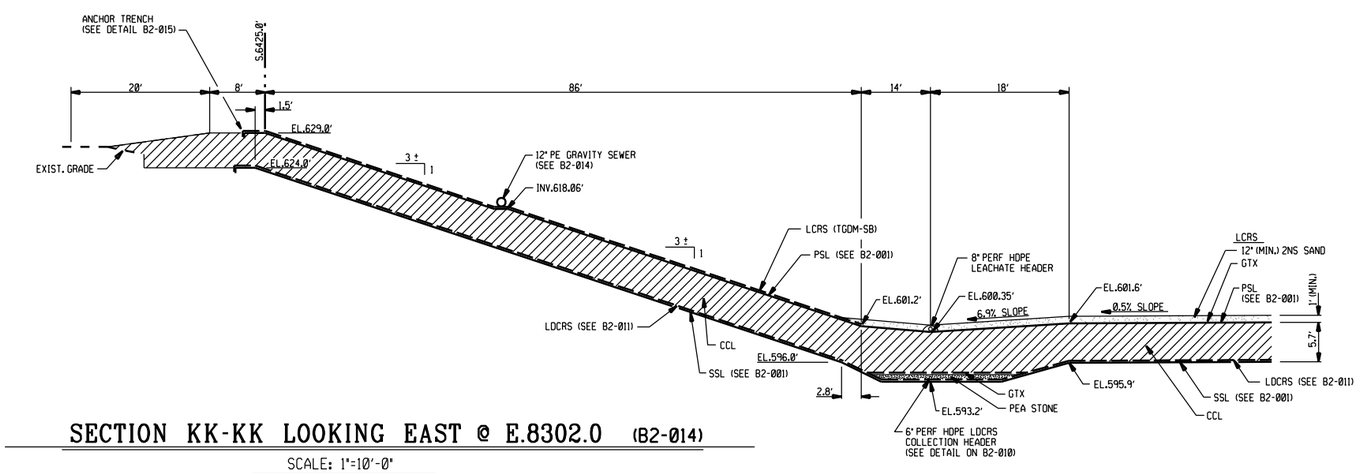

SECTION KK-KK LOOKING EAST @ E.8302.0 (B2-014)

SCALE: 1"=10'-0"

NOTE:
SEE LEACHATE COLLECTION LINE & LEACHATE COLLECTION HEADER DETAILS ON B2-019

REV. MARK	REVISION	BY	CHK	APP	DATE
A	CHANGED LDCRS COLLECTION HEADER FROM 4" TO 6"	LEG	JJA	JJA	3/14/00
B	REVISED PER "AS-BUILT"	LEG	JJA	JJA	12/00
C	ADDED REFERENCE TO SSL & PSL MATERIALS	LEG	JJA	JJA	8/05

REV. MARK	REVISION	BY	CHK	APP	DATE

DRAWING ISSUE RECORD

ISSUE NO.	REV	MATERIAL OR JOB SPEC	BID	FAB	CONST	REF
5	B	MDEQ				1/01
4	A	S1302 & S1303			3/00	
3		S1303-852	1/00			
2		S1302-852	1/00			
1		MDEQ				1/7/00

DATE ISSUED FOR

DESIGNED	J.J. ALLEN	12/99
DRAWN	L.E. GIRARDIN	12/99
CHECKED	J.J.A.	12/99
APPROVED	J.J.A.	12/99
PROJ. ENGR.	D.L. WILLERTZ	12/99
MFG. REP.	K. DETRICH	12/99

STATUS | PLANT NO.
P.E. SEAL

THE DOW CHEMICAL COMPANY
MICHIGAN DIVISION — MIDLAND, MICHIGAN
SALZBURG LANDFILL — 3600 BLDG.

NORTH WALL SECTIONS
CELLS 20, 21 & 22

JOB NUMBER	SCALE		REV.
852	AS NOTED	B2-017-852	C

2 UND

PRINTED | VER.

$INSTRUCTIONS $FILENAME $TIME $DATE

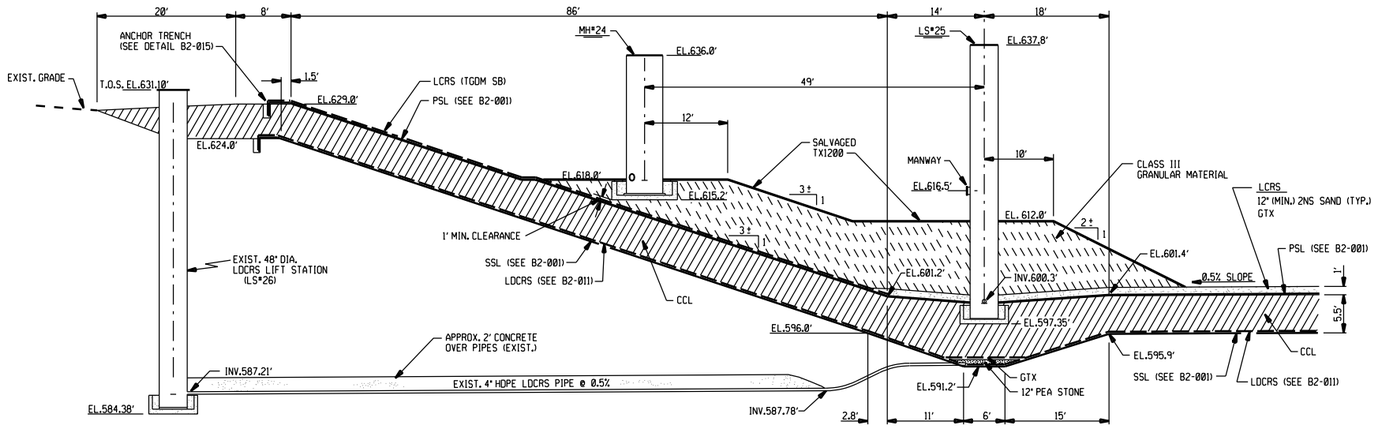

SECTION LL-LL LOOKING EAST @ E.8290.0

SCALE: 1"=10'-0"

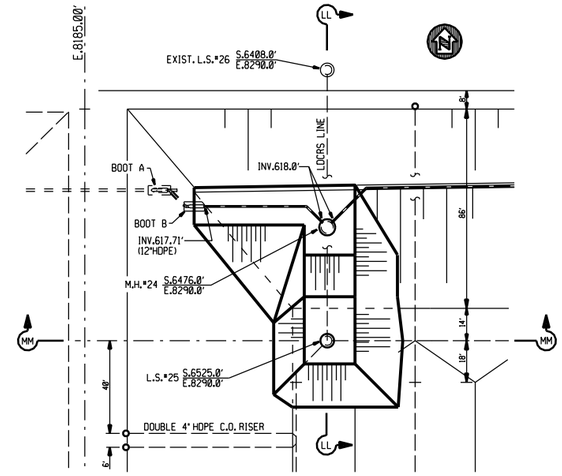

GRANULAR FILL PLAN VIEW

SCALE: 1"=30'-0"

NOTE:
THE EARTHWORK CONTRACTOR SHALL COVER THE ENTIRE SURFACE OF THE CLASS III MATERIAL PLACED AROUND LS*25 & MH*24 WITH THE TX1200 & TIRES SALVAGED FROM THE DIKE SLOPES. ALL TX1200 SEAMS TO BE SEWN AND TIRES TO BE PLACED AT 5 FOOT CENTERS OVER FULL AREA OF TX1200.

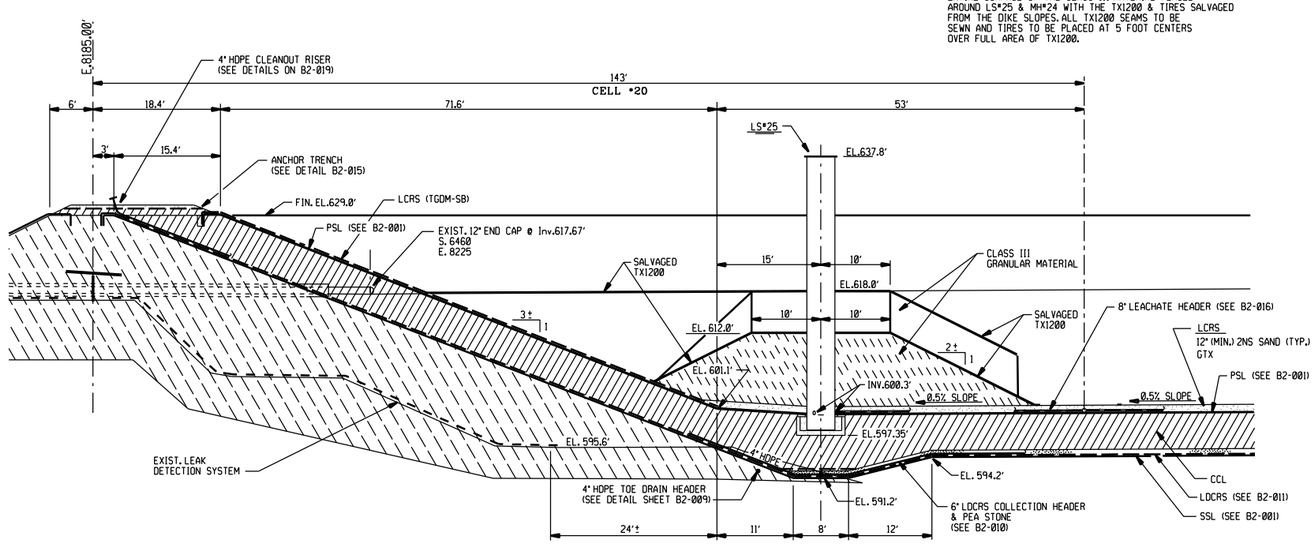

SECTION MM-MM LOOKING NORTH @ S.6525.0

SCALE: 1"=10'-0"

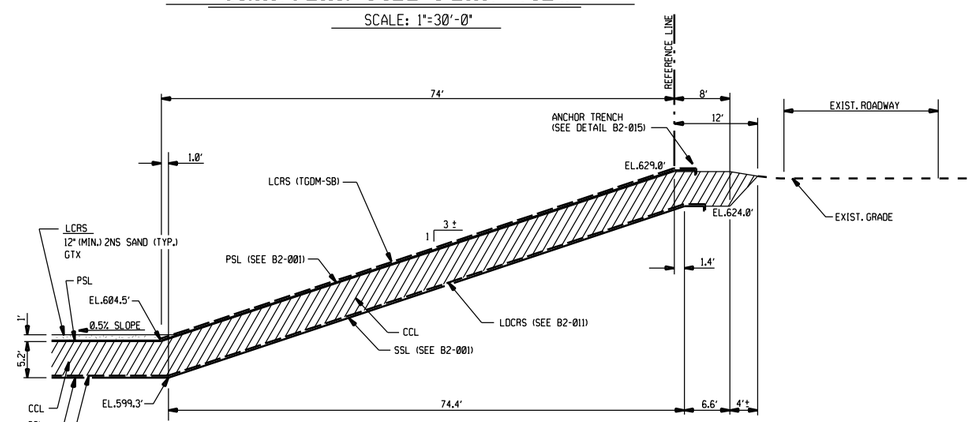

SOUTH END SECTION NN-NN (B2-014)

SCALE: 1"=10'-0"

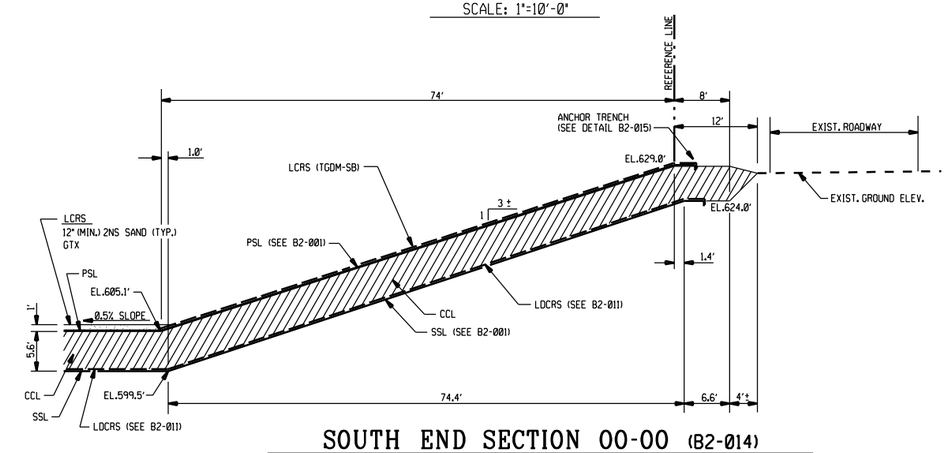

SOUTH END SECTION OO-00 (B2-014)

SCALE: 1"=10'-0"

REV. MARK	REVISION	BY	CHK	APP	DATE
A	REVISED ANCHOR TRENCH	LEG	JJA	JJA	2/14/00
B	REVISED GRANULAR FILL & ADDED PLAN VIEW	LEG	JJA	JJA	3/14/00
C	REVISED PER "AS-BUILT"	LEG	JJA	JJA	12/00
D	ADDED REFERENCE TO SSL & PSL MATERIALS	LEG	JJA	JJA	8/05

REV. MARK	REVISION	BY	CHK	APP	DATE

DRAWING ISSUE RECORD

ISSUE NO.	REV	MATERIAL OR JOB SPEC	BID	FAB	CONST	REF
5	A	S1302 & S1303	2/00			
4	A	MDEQ				2/00
3		S1303-852	1/00			
7	C	MDEQ				1/01
6	B	S1302 & S1303			3/00	

DATE ISSUED FOR

DESIGNED	J.J. ALLEN	12/99
DRAWN	L.E. GIRARDIN	12/99
CHECKED	J.J.A.	12/99
APPROVED	J.J.A.	12/99
PROJ. ENGR.	D.L. WILLERTZ	12/99
MFG. REP.	K. DETRICH	12/99

STATUS | PLANT NO.
P.E. SEAL

THE DOW CHEMICAL COMPANY
MICHIGAN DIVISION — MIDLAND, MICHIGAN
SALZBURG LANDFILL — 3600 BLDG.

L.S. AREA & SOUTH END SECTIONS
CELLS 20, 21 & 22

JOB NUMBER	SCALE		REV.
852	AS NOTED	B2-018-852	D

2 PLN

PRINTED | VER.

NOTE:
SEE BELOW FOR CLEANOUT RISER ANCHOR DETAIL.

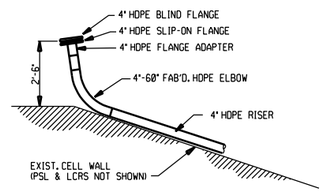

CLEANOUT RISER DETAIL - TOP OF SLOPE

(FOR LOCATION - SEE B2-014)
SCALE: 3/8" = 1'-0"

NOTE:
ALL HDPE PIPE & FITTINGS TO BE SDR-11

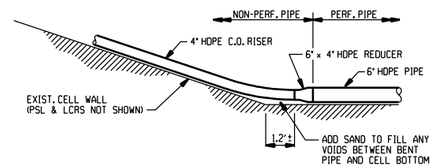

SOUTH END CLEANOUT RISER DETAIL

(FOR LOCATION - SEE B2-014)
SCALE: 3/8" = 1'-0"

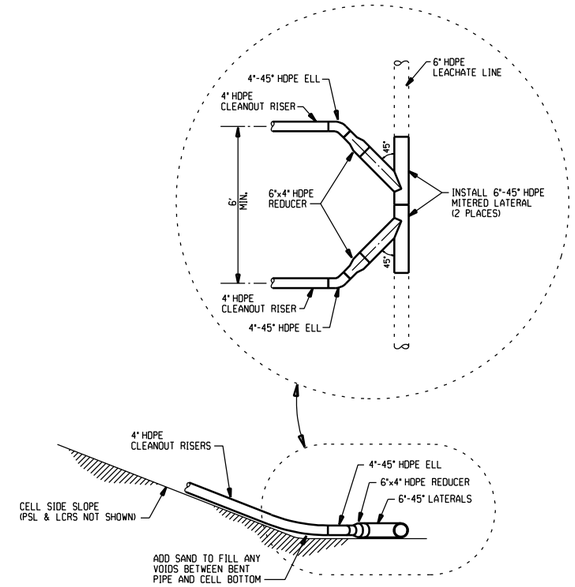

DOUBLE 4" HDPE CLEANOUT RISER DETAIL

(FOR LOCATION - SEE B2-014)
SCALE: 3/8" = 1'-0"

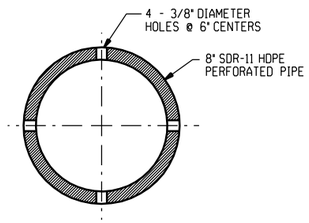

LEACHATE COLLECTION HEADER DETAIL

SCALE: NONE
FURNISHED BY DOW

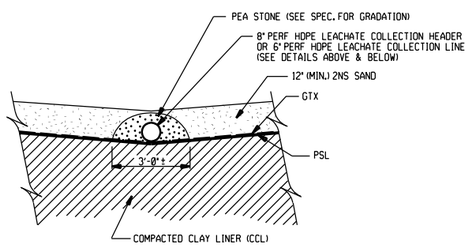

LEACHATE COLLECTION LINE/HEADER DETAIL (LCRS)

SCALE: 3/8" = 1'-0"

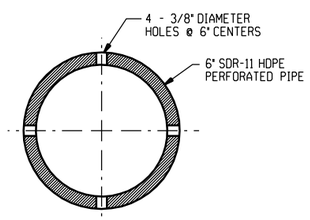

LEACHATE COLLECTION LINE DETAIL

SCALE: NONE
FURNISHED BY DOW

NOTE:
HDPE PIPE FLANGES TO BE FABRICATED FROM 1" HDPE PLATE. (SEE SPEC'S.)

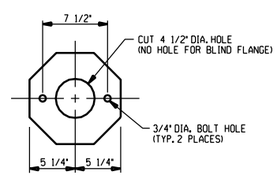

4" HDPE FLANGE DETAIL

SCALE: 1 1/2" = 1'-0"

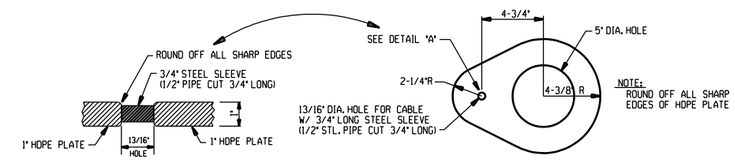

DETAIL "A"

N.T.S.

1" HDPE PLATE DETAIL

N.T.S.

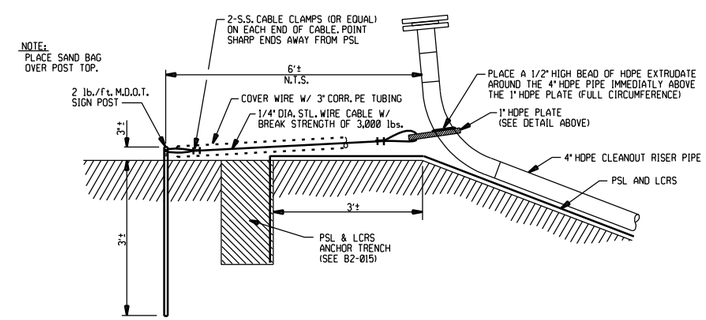

CLEANOUT RISER ANCHOR DETAIL

SCALE: 3/4" = 1'-0"

REV. MARK	REVISION	BY	CHK	APP	DATE
A	REVISED DOUBLE 4" CLEANOUT RISER DETAIL	LEG	JJA	JJA	3/14/00
B	"AS-BUILT"	LEG	JJA	JJA	12/00

REV. MARK	REVISION	BY	CHK	APP	DATE

DRAWING ISSUE RECORD

ISSUE NO.	REV	MATERIAL OR JOB SPEC	BID	FAB	CONST	REF
5	B	MDEQ				1/01
4	A	S1302 & S1303			3/00	
3		S1303-852	1/00			
2		S1302-852	1/00			
1		MDEQ				1/7/00

DATE ISSUED FOR

DESIGNED	J.J. ALLEN	12/99
DRAWN	L.E. GIRARDIN	12/99
CHECKED	J.J.A.	12/99
APPROVED	J.J.A.	12/99
PROJ. ENGR.	D.L. WILLERTZ	12/99
MFG. REP.	K. DETRICH	12/99

STATUS
P.E. SEAL
PLANT NO.

THE DOW CHEMICAL COMPANY
MICHIGAN DIVISION — MIDLAND, MICHIGAN
SALZBURG LANDFILL — 3600 BLDG.

MISCELLANEOUS DETAILS
CELLS 20, 21 & 22

JOB NUMBER	SCALE		REV.
852	AS NOTED	B2-019-852	B

PRINTED
VER.

2 UND

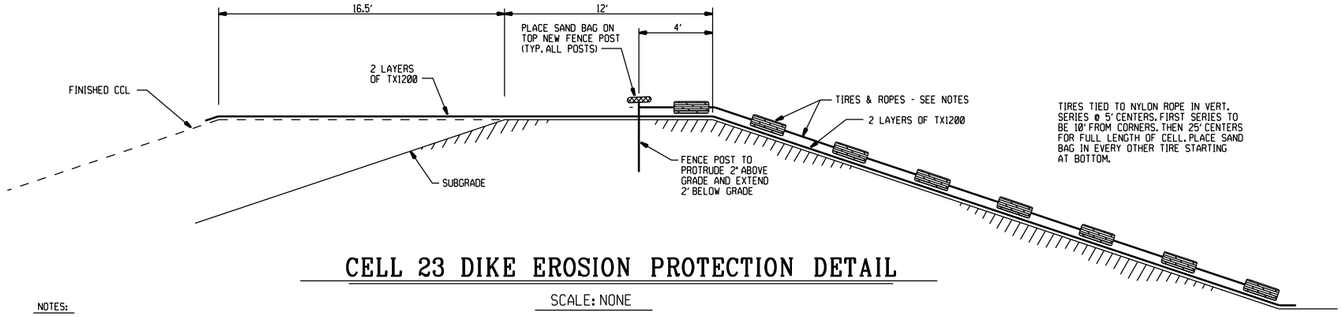

CELL 23 DIKE EROSION PROTECTION DETAIL

SCALE: NONE

NOTES:

1. FENCE POSTS SHALL BE SUPPLIED BY CONTRACTOR.
2. SAND BAGS SHALL BE FURNISHED BY DOW & FILLED WITH CONTRACTOR FURNISHED SAND.
3. TIRE STRINGS SHALL EXTEND FROM TOP TO BOTTOM OF SLOPE AND AT 25' CENTERS.

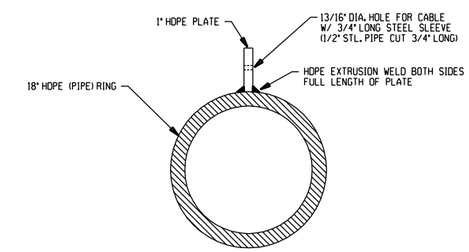

B - B

N.T.S.

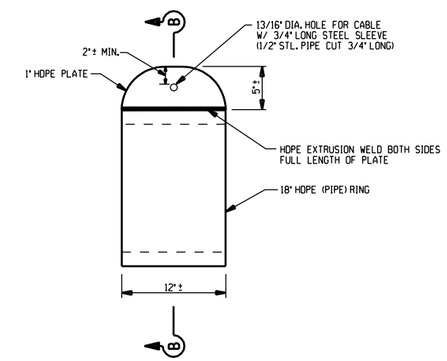

18" HDPE RING DETAIL

(DOW FURNISHED)

N.T.S.

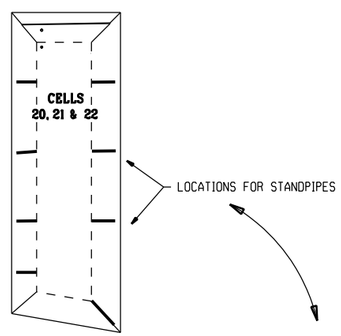

STANDPIPE LOCATIONS		
S.7173.43'	E.8216.44'	T.O. PIPE
S.7026.08'	E.8216.60'	T.O. PIPE
S.6829.08'	E.8216.95'	T.O. PIPE
S.6624.94'	E.8216.54'	T.O. PIPE
S.6625.34'	E.8502.16'	T.O. PIPE
S.6823.96'	E.8503.43'	T.O. PIPE
S.7024.70'	E.8502.01'	T.O. PIPE
S.7324.50'	E.8499.18'	T.O. PIPE

SURVEYED 8/26/02

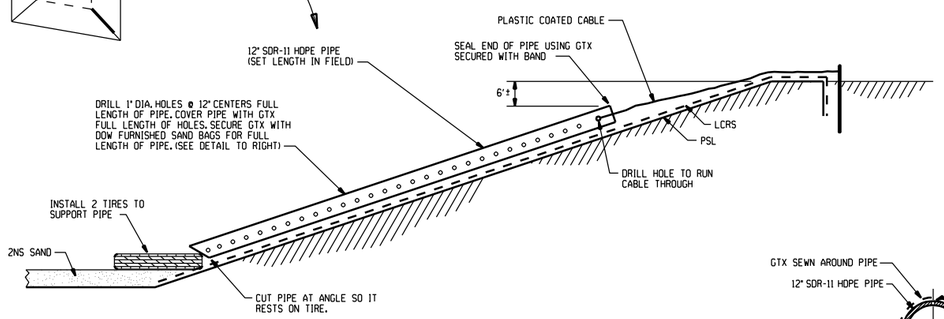

STANDPIPE DETAIL

SCALE: NONE

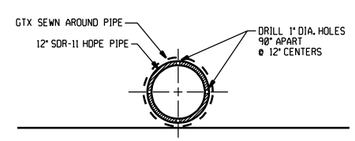

PERFORATION & GTX COVER DETAIL

NOTE:
PLACE SAND BAG (DOW FURNISHED) OVER POST TOP.

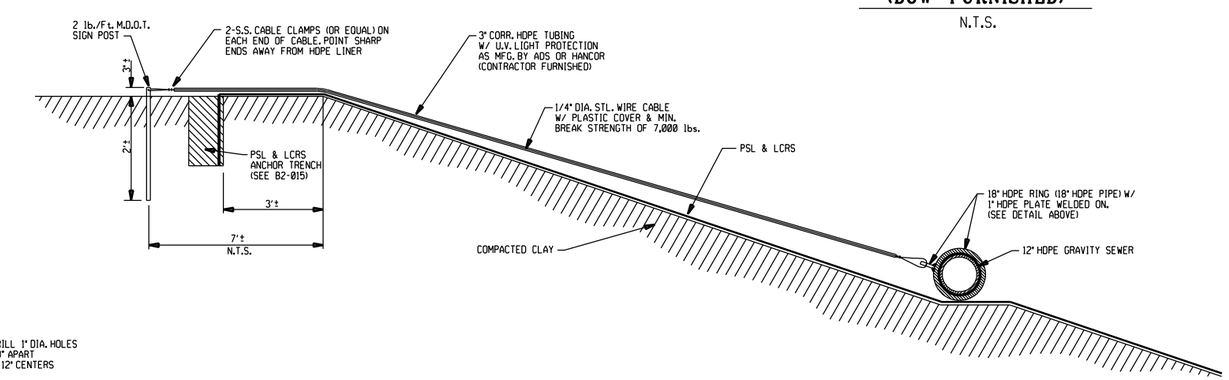

12" HDPE GRAVITY SEWER ANCHORAGE DETAIL

INSTALL AT 25' CENTERS

SCALE: 1/2" = 1'-0"

REV. MARK	REVISION	BY	CHK	APP	DATE
A	REVISED PER "AS-BUILT"	LEG	JJA	JJA	12/00
B	ADDED COORDINATES FOR T.O. STANDPIPE LOCATIONS	LEG	JJA		10/02
C	CORRECTED N. COORDINATES FOR STANDPIPES TO S. COORD'S	LEG	JJA		4/04

REV. MARK	REVISION	BY	CHK	APP	DATE

DRAWING ISSUE RECORD						
5	A	MDEQ				1/01
4		S1302 & S1303			3/00	
3		S1303-852	1/00			
2		S1302-852	1/00			
1		MDEQ				1/7/00
ISSUE NO.	REV	MATERIAL OR JOB SPEC	BID	FAB	CONST	REF
			DATE ISSUED FOR			

DESIGNED	J.J. ALLEN	12/99
DRAWN	L.E. GIRARDIN	12/99
CHECKED	J.J.A.	12/99
APPROVED	J.J.A.	12/99
PROJ. ENGR.	D.L. WILLERTZ	12/99
MFG. REP.	K. DETRICH	12/99

STATUS | PLANT NO.

P.E. SEAL

THE DOW CHEMICAL COMPANY

MICHIGAN DIVISION — MIDLAND, MICHIGAN

SALZBURG LANDFILL — 3600 BLDG.

MISCELLANEOUS DETAILS
CELLS 20, 21 & 22

JOB NUMBER	SCALE		REV.
852	AS NOTED	B2-020-852	C

2 UND

PRINTED | VER.

~ BDATE
$TIME
$FILENAME
STRUCTIONS

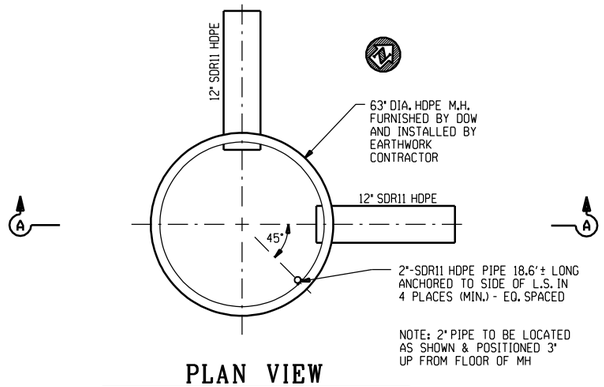

PLAN VIEW

SCALE: 1/2" = 1'-0"

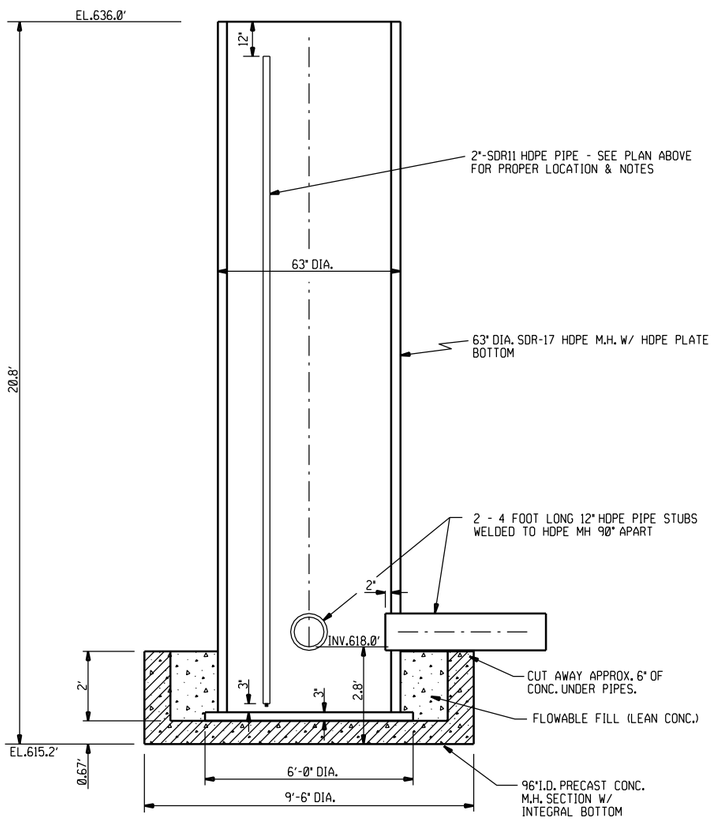

SECTION A-A

SCALE: 1/2" = 1'-0"

NOTES:

1. 63" HDPE MH WILL BE FURNISHED BY DOW TO THE SITE WITH THE 2" HDPE PIPE, THE 2-12" HDPE PIPE STUBS AND THE 3"THK. HDPE PLATE BOTTOM ATTACHED.
2. EARTHWORK CONTRACTOR SHALL SUPPLY CONC. MH BASE & LEAN CONC. FILL

REV. MARK	REVISION	BY	CHK	APP	DATE
A	"AS-BUILT"	LEG	JJA	JJA	12/00

REV. MARK	REVISION	BY	CHK	APP	DATE

DRAWING ISSUE RECORD

ISSUE NO.	REV	MATERIAL OR JOB SPEC	BID	FAB	CONST	REF
5	A	MDEQ				1/01
4		S1302 & S1303			3/00	
3		S1303-852	1/00			
2		S1302-852	1/00			
1		MDEQ				1/7/00

DATE ISSUED FOR

DESIGNED	J.J. ALLEN	12/99
DRAWN	L.E. GIRARDIN	12/99
CHECKED	J.J.A.	12/99
APPROVED	J.J.A.	12/99
PROJ. ENGR.	D.L. WILLERTZ	12/99
MFG. REP.	K. DETRICH	12/99

STATUS | PLANT NO.

P.E. SEAL

THE DOW CHEMICAL COMPANY

MICHIGAN DIVISION — MIDLAND, MICHIGAN

SALZBURG LANDFILL — 3600 BLDG.

MANHOLE #24
CELLS 20, 21 & 22

PROJECT NUMBER	SCALE		REV.
852	AS NOTED	B2-021-852	A

2

PRINTED | VER.

$PERSON $DATE $TIME $FILENAME $INSTRUCTIONS

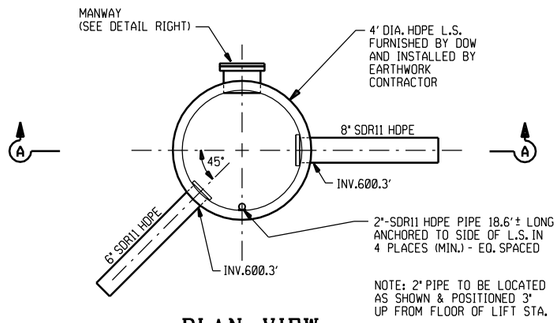

PLAN VIEW

SCALE: 1/2" = 1'-0"

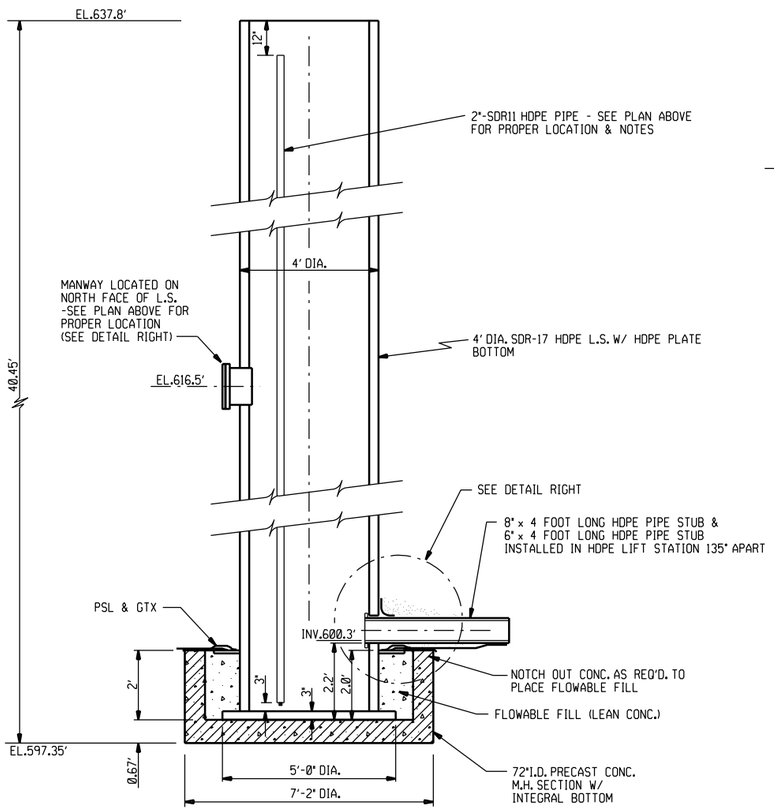

SECTION A-A

SCALE: 1/2" = 1'-0"

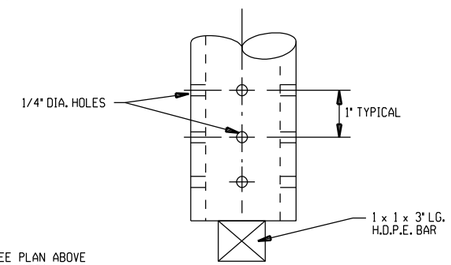

SECTION C-C

NO SCALE

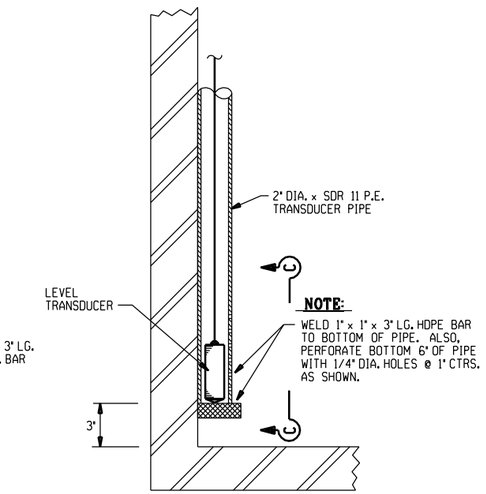

TYPICAL TRANSDUCER INSTALLATION DETAIL

NO SCALE

NOTE:

INSTALLED LOW CARBONATE FILTER STONE
+/- 50' AROUND LIFT STATION

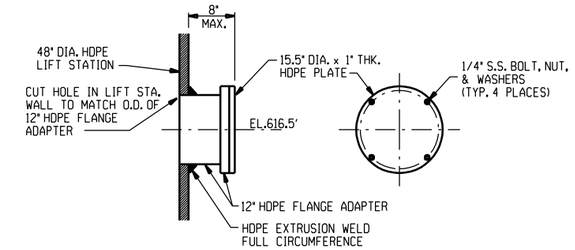

L.S. MANWAY DETAIL

SCALE: NONE

NOTES:

1. 48" HDPE LS WILL BE FURNISHED BY DOW TO THE SITE WITH THE MANWAY, 2" HDPE PIPE, THE 1" HDPE PLATE RING AND THE HDPE PLATE BOTTOM ATTACHED. THE 6" & 8" HDPE PIPE STUBS WILL COME UNATTACHED AND SHALL BE INSTALLED BY THE EARTHWORK CONTRACTOR AT THE SITE.
2. EARTHWORK CONTRACTOR SHALL SUPPLY CONC. MH BASE & LEAN CONC. FILL
3. GEOSYNTHETIC INSTALLER RESPONSIBLE FOR ALL PSL, GTX AND EXTRUSION WELDS

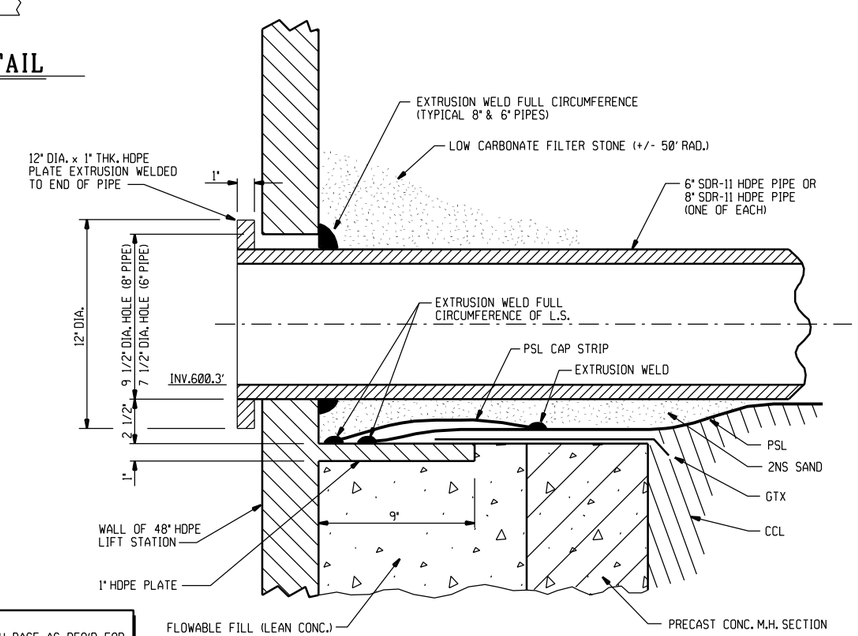

NOTE:
NOTCH M.H. BASE AS REQ'D. FOR
PLACEMENT OF FLOWABLE FILL

LIFT STATION COLLAR DETAIL

SCALE: 3" = 1'-0"

REV. MARK	REVISION	BY	CHK	APP	DATE
A	REVISED PER "AS-BUILT"	LEG	JJA	JJA	12/00

REV. MARK	REVISION	BY	CHK	APP	DATE

DRAWING ISSUE RECORD

ISSUE NO.	REV	MATERIAL OR JOB SPEC	BID	FAB	CONST	REF
5	A	MDEQ				1/01
4		S1302 & S1303			3/00	
3		S1303-852	1/00			
2		S1302-852	1/00			
1		MDEQ				1/7/00

DATE ISSUED FOR

DESIGNED	J.J. ALLEN	12/99
DRAWN	L.E. GIRARDIN	12/99
CHECKED	J.J.A.	12/99
APPROVED	J.J.A.	12/99
PROJ. ENGR.	D.L. WILLERTZ	12/99
MFG. REP.	K. DETRICH	12/99

STATUS
P.E. SEAL

PLANT NO.

THE DOW CHEMICAL COMPANY

MICHIGAN DIVISION — MIDLAND, MICHIGAN

SALZBURG LANDFILL — 3600 BLDG.

LCRS LIFT STATION #25
CELLS 20, 21 & 22

PROJECT NUMBER	SCALE		REV.
852	AS NOTED	B2-022-852	A

PRINTED — VER.

2

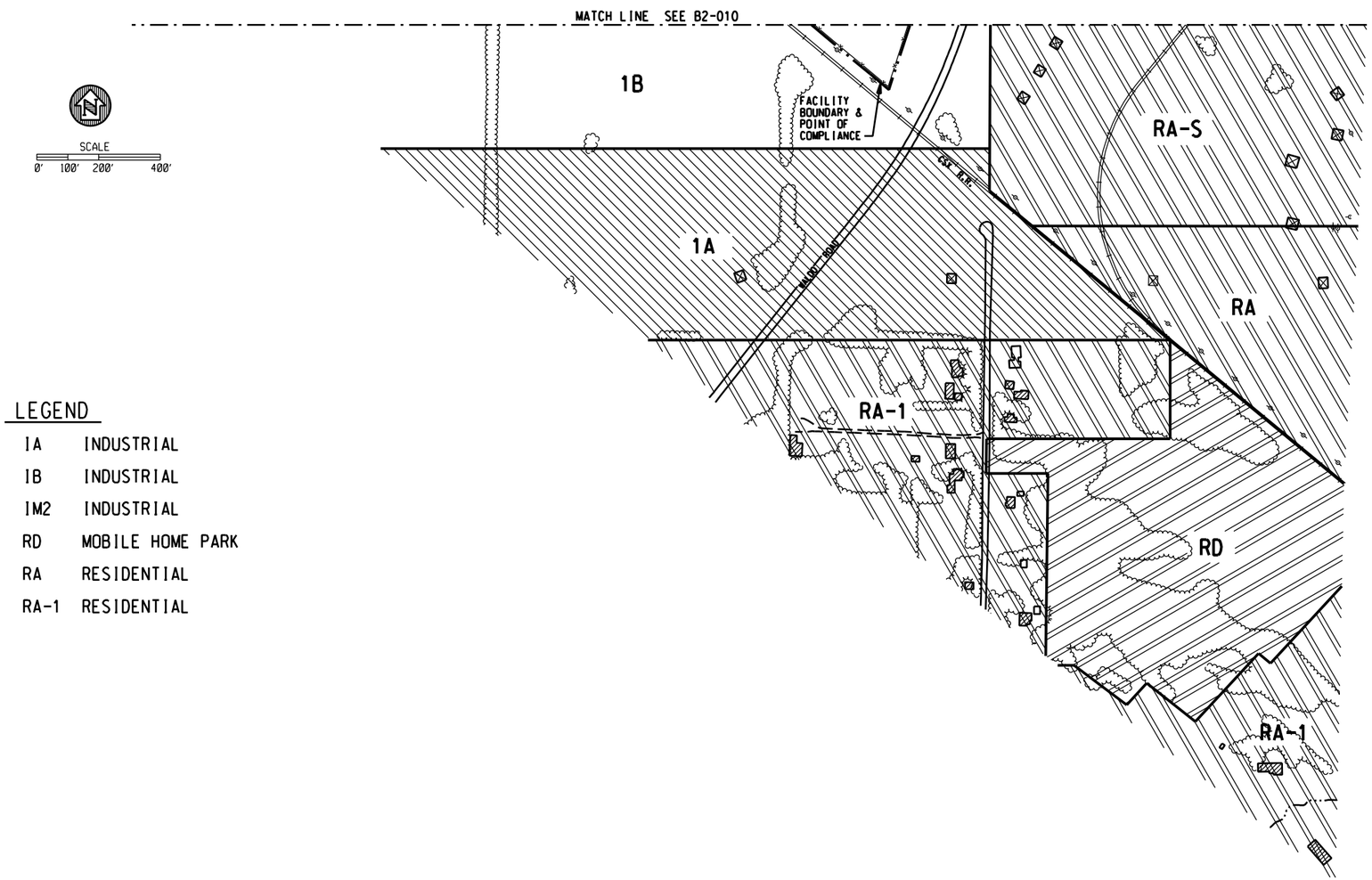

LEGEND

- ELECTRICAL TOWER
- UTILITY POLES
- FACILITY BOUNDARY & POINT OF COMPLIANCE
- FENCE LINE
- PAVED ROADWAYS
- UNPAVED ROADWAYS
- HAZARDOUS WASTE CELL

LEGEND

IA	INDUSTRIAL
IB	INDUSTRIAL
IM2	INDUSTRIAL
RD	MOBILE HOME PARK
RA	RESIDENTIAL
RA-1	RESIDENTIAL

REV. MARK	REVISION	BY	CHK	APP	DATE
A	ADDED REFERENCE TO POINT OF COMPLIANCE	LEG	JJA	JJA	9/08

REV. MARK	REVISION	BY	CHK	APP	DATE

DRAWING ISSUE RECORD

ISSUE NO.	REV	MATERIAL OR JOB SPEC	BID	FAB	CONST	REF
			DATE ISSUED FOR			

DESIGNED	J.J. ALLEN	11/05
DRAWN	L.E. GIRARDIN	11/05
CHECKED	J.J.A.	11/05
APPROVED	J.J.A.	11/05
PROJ. ENGR.	J.J. ALLEN	11/05
MFG. REP.	STEVE LUCAS	11/05

STATUS | PLANT NO.
P.E. SEAL

THE DOW CHEMICAL COMPANY
MICHIGAN DIVISION — MIDLAND, MICHIGAN
SALZBURG LANDFILL — 3600 BLDG

FIGURE 11.P-4
SURROUNDING LAND USES MAP
(SHEET 2 OF 2)

EJN NUMBER	SCALE		REV.
114291	1" = 200'-0"	B2-103-1374	A

2 PLN

PRINTED | VER.

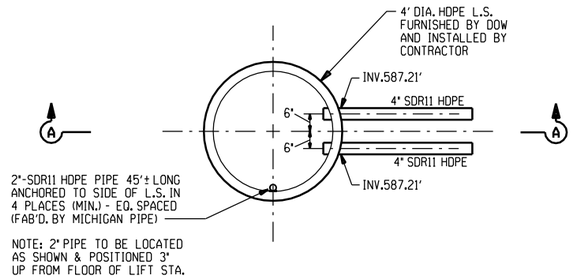

PLAN VIEW

SCALE: 1/2" = 1'-0"

NOTE:

SEE MECHANICAL PLANS FOR ABOVE GROUND PIPING AND M.H. COVER

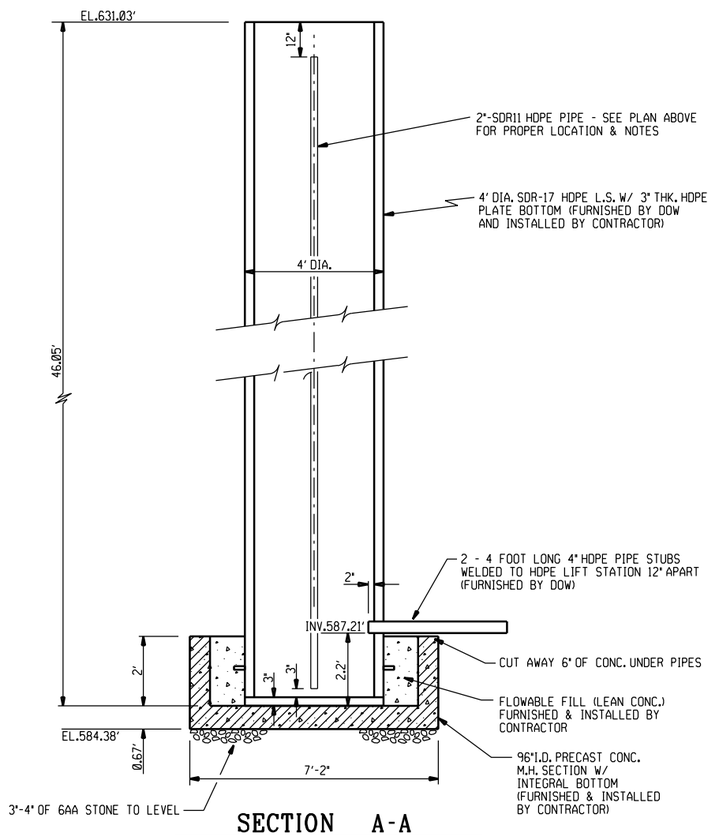

SECTION A-A

SCALE: 1/2" = 1'-0"

NOTE:

THIS IS AN EXISTING LIFT STATION. TOP, BOTTOM & INV. ELEVATIONS HAVE BEEN "AS-BUILT"

REV. MARK	REVISION	BY	CHK	APP	DATE	REV. MARK	REVISION	BY	CHK	APP	DATE
A	"AS-BUILT"	LEG	JJA	JJA	12/00						

DRAWING ISSUE RECORD

ISSUE NO.	REV	MATERIAL OR JOB SPEC	BID	FAB	CONST	REF
1	A	MDEQ				1/01

DATE ISSUED FOR

DESIGNED	J.J. ALLEN	12/99
DRAWN	L.E. GIRARDIN	12/99
CHECKED	J.J.A.	12/99
APPROVED	J.J.A.	12/99
PROJ. ENGR.	D.L. WILLERTZ	12/99
MFG. REP.	K. DETRICH	12/99

STATUS | PLANT NO.

P.E. SEAL

THE DOW CHEMICAL COMPANY

MICHIGAN DIVISION — MIDLAND, MICHIGAN

SALZBURG LANDFILL — 3600 BLDG.

LDCRS LIFT STATION #26
CELLS 20, 21 & 22

PROJECT NUMBER	SCALE		REV.
852	AS NOTED	B2-023-852	A

PRINTED | VER.

2

$FILENAME $INSTRUCTIONS $PERSON $DATE $TIME $FILENAME $DATE $INSTRUCTIONS

505056/Sht 1/Rev 0

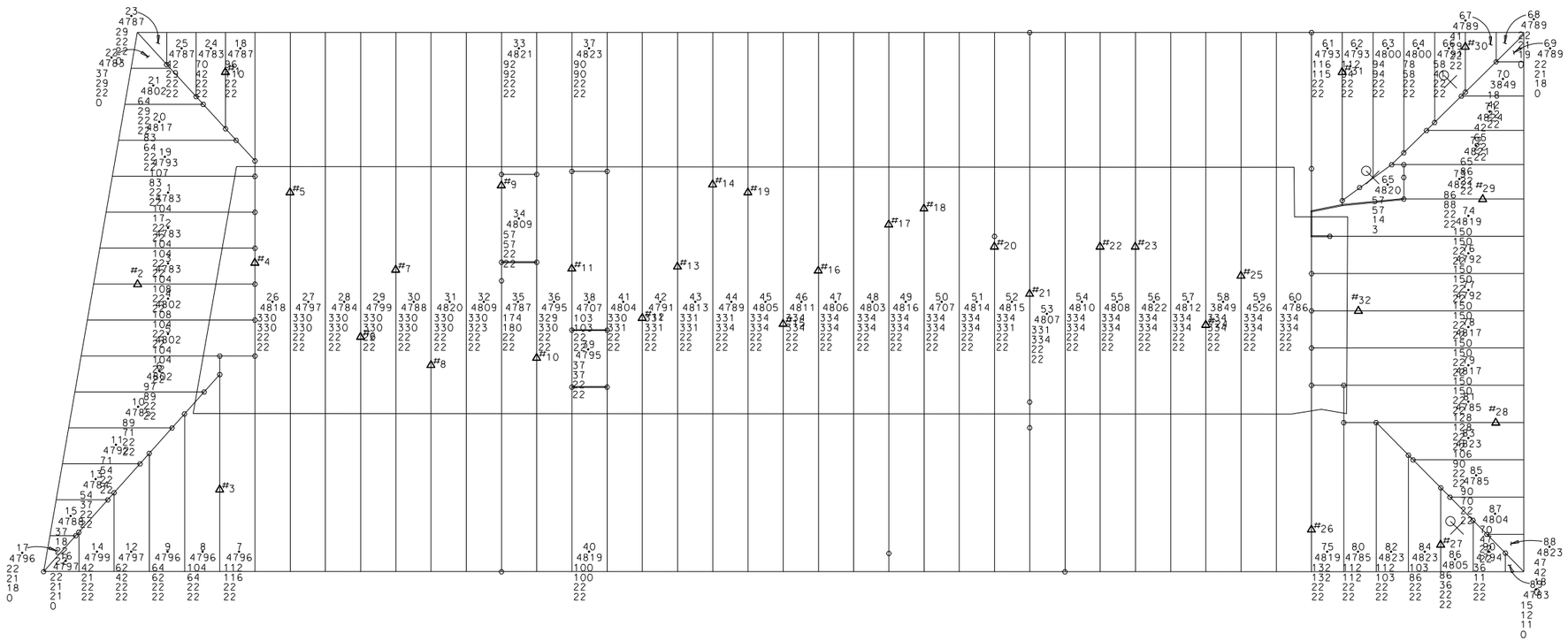

Plan View
Approximate Scale 1" = 40'

LEGEND

50 / 4578	– SHEET NO. (TYP.) TYP. ROLL I.D. NO.
	– TYP. CAP I.D.
	– HANDWELD
	– WELDED SEAMS
#2	– TEST SAMPLE
	– PATCH
	– PENETRATION

GSE Lining Technology, Inc.
19103 Gundle Road
Houston, Texas 77073
800-435-2008 281-443-8564

THE INFORMATION DISCLOSED ON THIS DRAWING, WHETHER RELATING TO PRODUCTS, METHODS, DESIGNS, TECHNIQUES, USES OR ANY COMBINATION THEREOF IS CONFIDENTIAL AND THE PROPERTY OF GSE LINING TECHNOLOGY, INC. AND MAY NOT BE COPIED OR REPRODUCED IN ANY WAY WITHOUT PRIOR WRITTEN PERMISSION.

Dow Chemical
Salzburg L/F
Midland Michigan
Primary Liner As-Built Drawing
Cells 20, 21, & 22

REV.	DATE	DESCRIPTION	BY
△			
△			
△			

SCALE	DATE	REVISION NO.
Noted	09/19/00	0

DWG. BY	CHECKED BY	SHT.	DWG. NO.
Israel	Zunker	1 of 2	505056AA

REV. MARK	REVISION	BY	CHK	APP	DATE	REV. MARK	REVISION	BY	CHK	APP	DATE

DRAWING ISSUE RECORD

ISSUE NO.	REV	MATERIAL OR JOB SPEC	BID	FAB	CONST	REF
1		MDEQ				1/01

DATE ISSUED FOR

DESIGNED	J.J. ALLEN	9/00
DRAWN		9/00
CHECKED	J.J.A.	9/00
APPROVED	J.J.A.	9/00
PROJ. ENGR.	D.L. WILLERTZ	9/00
MFG. REP.	K. DETRICH	9/00

STATUS | PLANT NO.
P.E. SEAL

THE DOW CHEMICAL COMPANY
MICHIGAN OPERATIONS MIDLAND, MICHIGAN
SALZBURG LANDFILL 3600 BLDG

GSE AS-BUILT FOR PRIMARY LINER
CELLS 20, 21 & 22

JOB NUMBER	SCALE		REV.
852	AS NOTED	B2-024-852	2 PLN

PRINTED VER.

505056/Sht 2/Rev 0

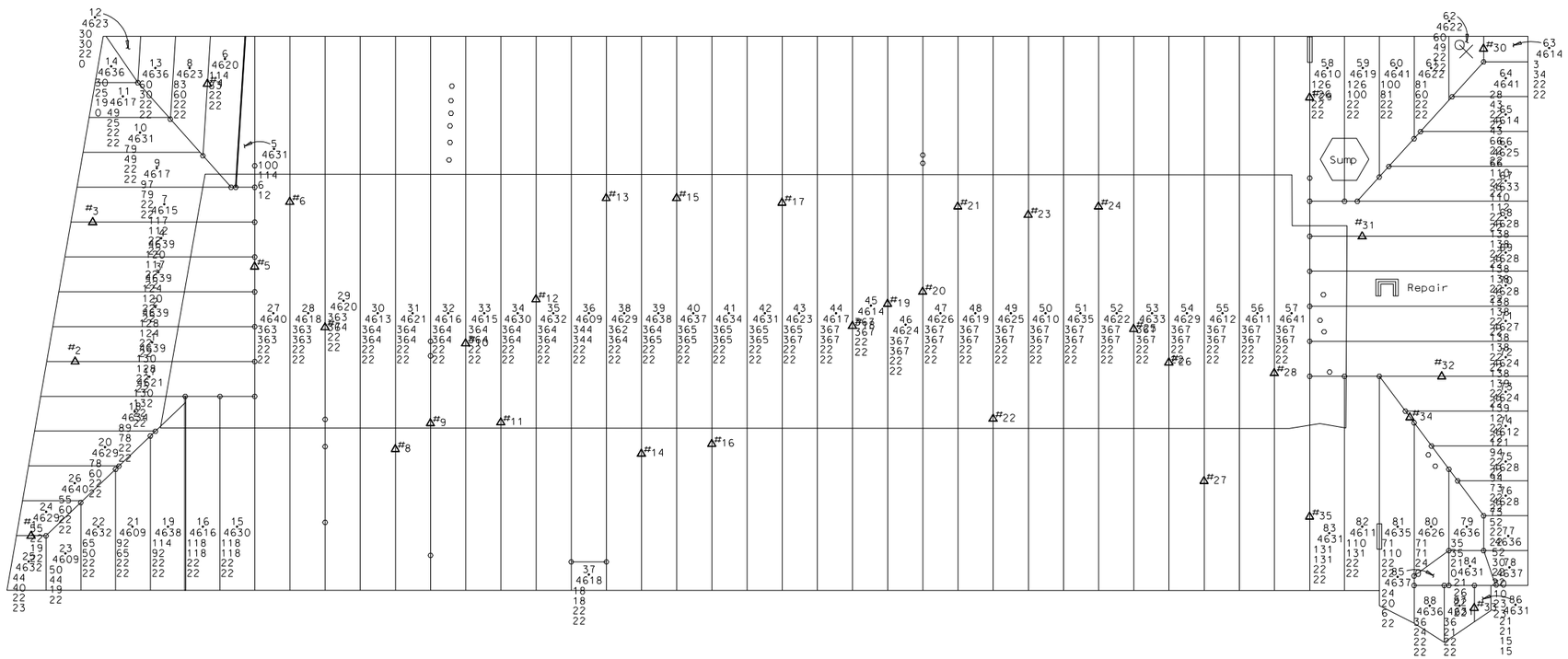

Plan View
Approximate Scale 1" = 40'

LEGEND

- 50 / 4578 – SHEET NO. (TYP.) TYP. ROLL I.D. NO.
- TYP. CAP I.D.
- HANDWELD
- WELDED SEAMS
- #2 – TEST SAMPLE
- PATCH
- PENETRATION

GSE Lining Technology, Inc.
19103 Gundle Road
Houston, Texas 77073
800-435-2008 281-443-8564

THE INFORMATION DISCLOSED ON THIS DRAWING, WHETHER RELATING TO PRODUCTS, METHODS, DESIGNS, TECHNIQUES, USES OR ANY COMBINATION THEREOF IS CONFIDENTIAL AND THE PROPERTY OF GSE LINING TECHNOLOGY, INC. AND MAY NOT BE COPIED OR REPRODUCED IN ANY WAY WITHOUT PRIOR WRITTEN PERMISSION.

Dow Chemical
Salzburg L/F
Midland Michigan
Secondary Liner As-Built Drawing
Cells 20, 21, & 22

REV.	DATE	DESCRIPTION	BY
△			
△			
△			

SCALE	DATE	REVISION NO.
Noted	09/18/00	0

DWG. BY	CHECKED BY	SHT.	DWG. NO.
Israel	Zunker	2 of 2	505056AB

REV. MARK	REVISION	BY	CHK	APP	DATE	REV. MARK	REVISION	BY	CHK	APP	DATE

DRAWING ISSUE RECORD

ISSUE NO.	REV	MATERIAL OR JOB SPEC	BID	FAB	CONST	REF
1		MDEQ				1/01

DATE ISSUED FOR

DESIGNED	J.J. ALLEN	9/00
DRAWN		9/00
CHECKED	J.J.A.	9/00
APPROVED	J.J.A.	9/00
PROJ. ENGR.	D.L. WILLERTZ	9/00
MFG. REP.	K. DETRICH	9/00

STATUS | PLANT NO. | P.E. SEAL

THE DOW CHEMICAL COMPANY
MICHIGAN OPERATIONS MIDLAND, MICHIGAN
SALZBURG LANDFILL 3600 BLDG

GSE AS-BUILT FOR SECONDARY LINER
CELLS 20, 21 & 22

JOB NUMBER	SCALE		REV.
852	AS NOTED	B2-025-852	

2 PLN

PRINTED | VER.

$PERSON $DATE $TIME $FILENAME $INSTRUCTIONS

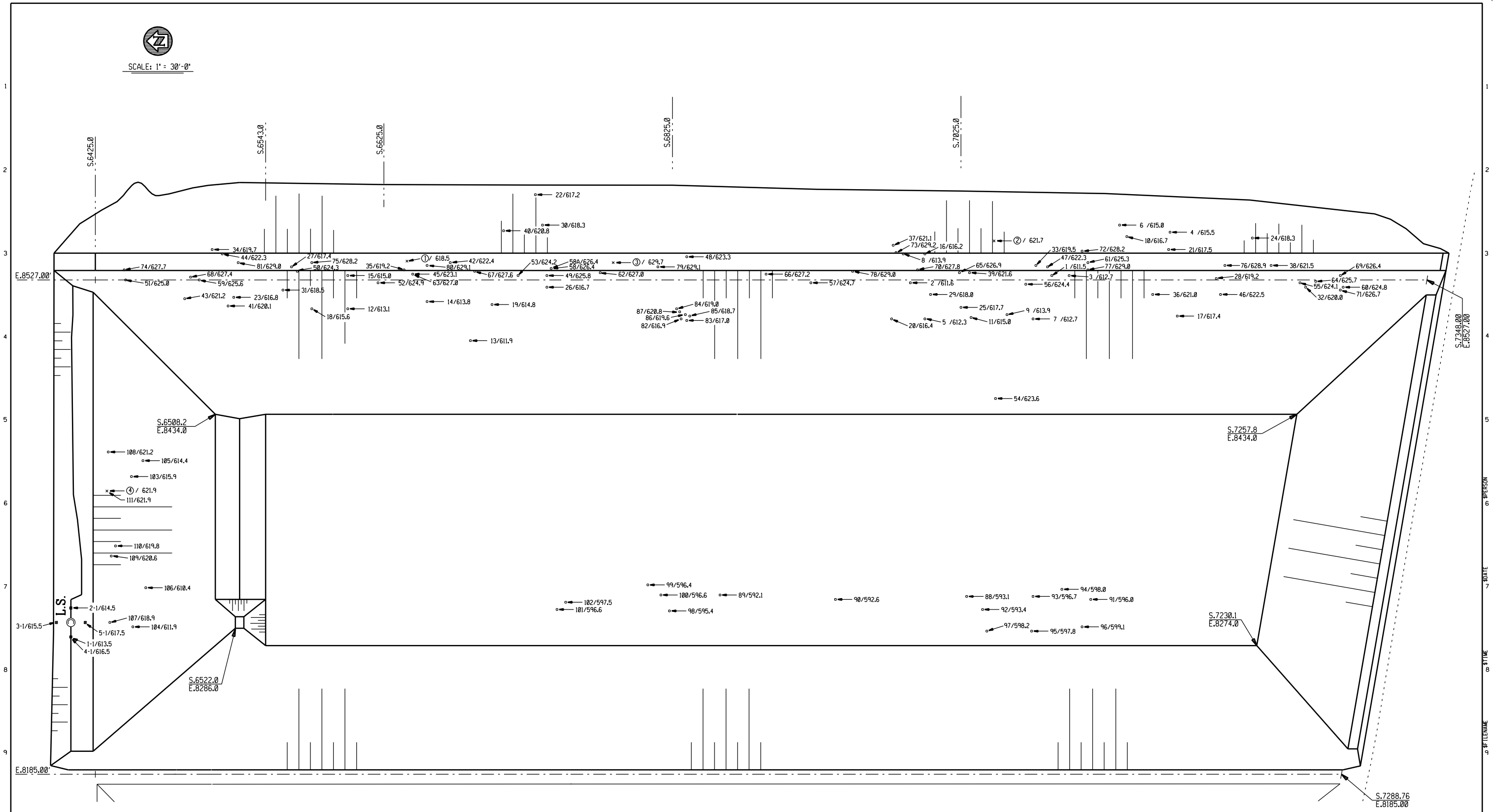

CELLS 20, 21 & 22
SUBGRADE PLAN

SCALE: 1" = 30'-0"

LEGEND:

- 1 / 612.5 = DENSITY TEST LOCATION & ELEVATION
- ① / 612.5 = PERMEABILITY TEST SAMPLE LOCATION & ELEVATION
- 1-1 / 612.5 = INFORMATIONAL DENSITY TEST LOCATION & ELEVATION

REV. MARK	REVISION	BY	CHK	APP	DATE	REV. MARK	REVISION	BY	CHK	APP	DATE

DRAWING ISSUE RECORD

ISSUE NO.	REV	MATERIAL OR JOB SPEC	BID	FAB	CONST	REF
2		MDEQ				1/01
1		MDEQ				3/00

DATE ISSUED FOR

DESIGNED	J.J. ALLEN	3/00
DRAWN	L.E. GIRARDIN	3/00
CHECKED	J.J.A.	3/00
APPROVED	J.J.A.	3/00
PROJ. ENGR.	D.L. WILLERTZ	3/00
MFG. REP.	K. DETRICH	3/00

STATUS | PLANT NO.
P.E. SEAL

THE DOW CHEMICAL COMPANY
MICHIGAN DIVISION — MIDLAND, MICHIGAN
SALZBURG LANDFILL — 3600 BLDG.

DENSITY & PERMEABILITY TEST LOCATION MAP
SUBGRADE - CELLS 20, 21 & 22

JOB NUMBER	SCALE		REV.
852	AS NOTED	B2-100-852	2 PLN

PRINTED | VER.

$INSTRUCTIONS $FILENAME $TIME $DATE $PERSON

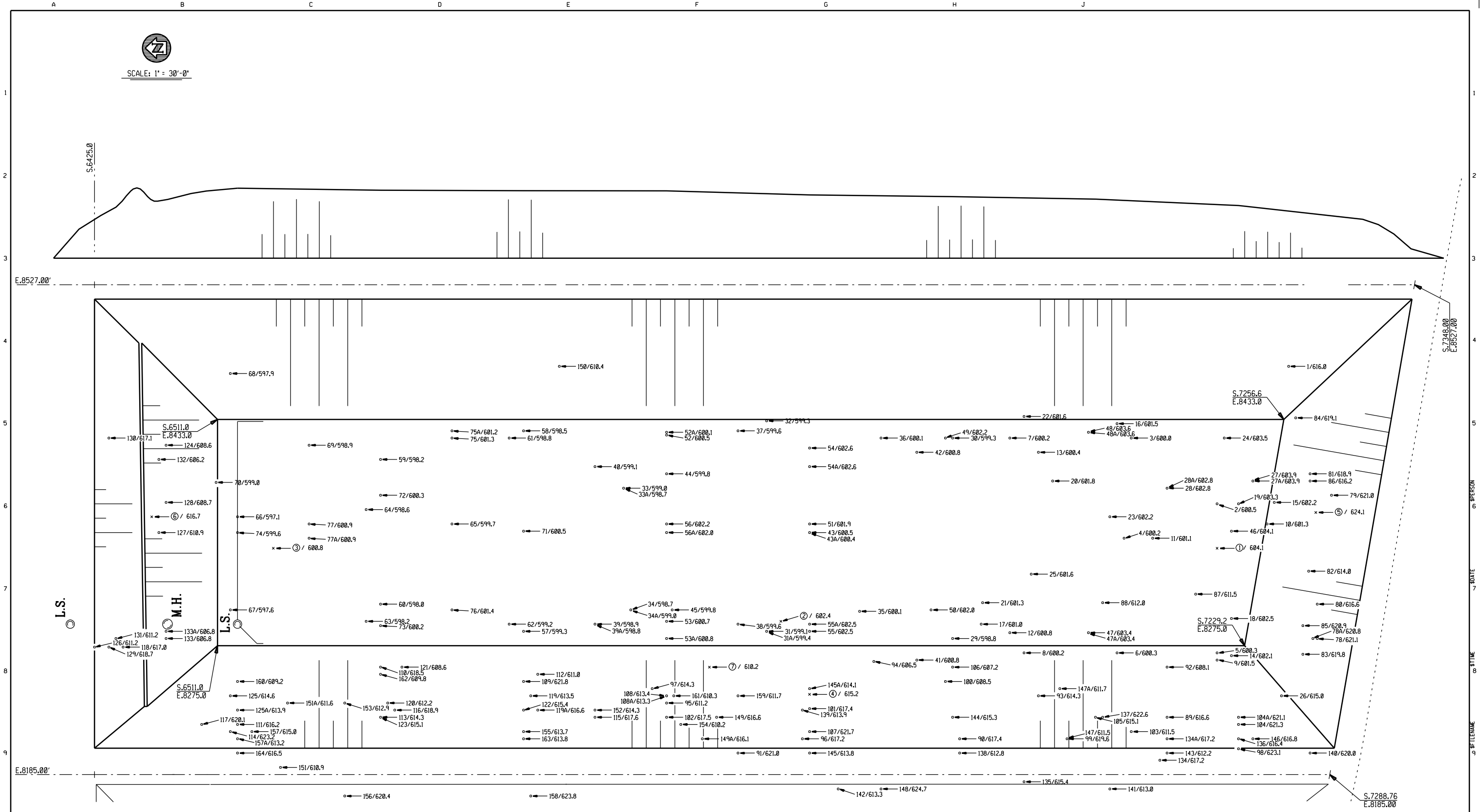

CELLS 20, 21 & 22
CCL PLAN

SCALE: 1" = 30'-0"

LEGEND:

- 1 / 612.5 = DENSITY TEST LOCATION & ELEVATION
- ① / 612.5 = PERMEABILITY TEST SAMPLE LOCATION & ELEVATION

REV. MARK	REVISION	BY	CHK	APP	DATE	REV. MARK	REVISION	BY	CHK	APP	DATE

DRAWING ISSUE RECORD

ISSUE NO.	REV	MATERIAL OR JOB SPEC	BID	FAB	CONST	REF
1		MDEQ				1/01

DATE ISSUED FOR

DESIGNED	J.J. ALLEN	12/00
DRAWN	L.E. GIRARDIN	12/00
CHECKED	J.J.A.	12/00
APPROVED	J.J.A.	12/00
PROJ. ENGR.	D.L. WILLERTZ	12/00
MFG. REP.	K. DETRICH	1/00

STATUS | PLANT NO.

P.E. SEAL

THE DOW CHEMICAL COMPANY

MICHIGAN DIVISION — MIDLAND, MICHIGAN

SALZBURG LANDFILL — 3600 BLDG.

DENSITY & PERMEABILITY TEST LOCATION MAP
CCL - CELLS 20, 21 & 22

JOB NUMBER	SCALE		REV.
852	AS NOTED	B2-101-852	2 PLN

PRINTED | VER.

$INSTRUCTIONS $FILENAME $TIME $DATE $PERSON

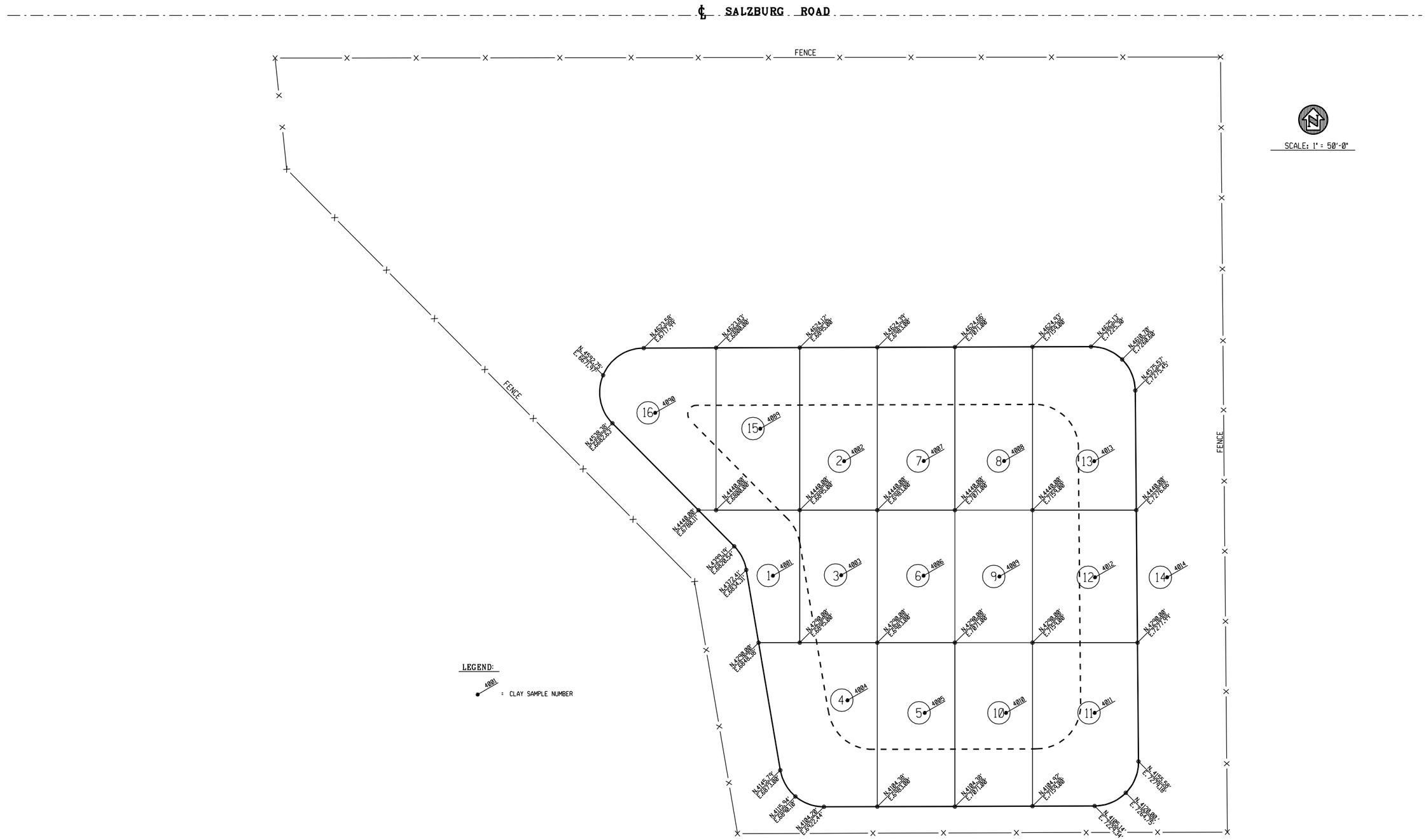

REV. MARK	REVISION	BY	CHK	APP	DATE	REV. MARK	REVISION	BY	CHK	APP	DATE

DRAWING ISSUE RECORD

ISSUE NO.	REV	MATERIAL OR JOB SPEC	BID	FAB	CONST	REF
1		MDEQ				1/01

DATE ISSUED FOR

DESIGNED	J.J. ALLEN	4/00
DRAWN	L.E. GIRARDIN	4/00
CHECKED	J.J.A.	4/00
APPROVED	J.J.A.	4/00
PROJ. ENGR.	D.L. WILLERTZ	4/00
MFG. REP.	K. DETRICH	4/00

STATUS | PLANT NO.

P.E. SEAL

THE DOW CHEMICAL COMPANY

MICHIGAN DIVISION — MIDLAND, MICHIGAN

SALZBURG LANDFILL — 3600 BLDG.

ELK RANCH CLAY BORROW PIT
CELLS 20, 21, &22 PROJECT

JOB NUMBER	SCALE		REV.
852	1" = 50'-0"	B2-102-852	

2 PLN

PRINTED | VER.

$PERSON $DATE $TIME $FILENAME $INSTRUCTIONS

LEGEND:

CCL = COMPACTED CLAY LINER

GCL = GEOSYNTHETIC CLAY LINER

GDM-DB = GEOCOMPOSITE DRAINAGE MATERIAL DOUBLE BONDED (GTX BOTH SIDES)

GDM-SB = GEOCOMPOSITE DRAINAGE MATERIAL SINGLE BONDED (GTX ONE SIDE)

GMB = GEOMEMBRANE

GNT = GEONET

GTX = GEOTEXTILE (SEPARATOR)

HDPE = HIGH DENSITY POLYETHYLENE

LS = LIFT STATION

MH = MANHOLE

PERF = PERFORATED

GENERAL NOTES:

1. THE TERM "LINER SYSTEM" ON THIS DRAWING REFERS TO ALL SOIL & GEOSYNTHETIC COMPONENTS OF THE PRIMARY & SECONDARY LINERS

2. ALL ELEVATIONS ARE ON USGS DATUM

3. THE INTERMEDIATE DIKE WILL BE CONSTRUCTED TO A ELEVATION THAT WILL FACILITATE A 100 YEAR, 24 HOUR STORM WITH 2 FEET OF FREEBOARD, AND WITH THE PHASE 1 WASTE LIFTS A, B AND C IN PLACE

4. MATERIAL SPECIFICATIONS - THE FOLLOWING ARE THE CURRENT MATERIAL SPECIFICATIONS USED IN THE CONSTRUCTION OF THE LANDFILL CELLS AND CAPS. THEY WILL BE UPDATED TO MEET CHANGES IN THE REGULATORY REQUIREMENTS AND/OR IF BETTER MATERIALS OF CONSTRUCTION BECOME AVAILABLE.

COMPACTED CLAY LINER - CCL WILL BE CH OR CL SOIL COMPACTED INTO A HOMOGENOUS LINER WITH A MAXIMUM PERMEABILITY OF 1 X 10-7 CM/SEC

GEOSYNTHETIC CLAY LINER - GCL WILL HAVE 0.75 PSF OF BENTONITE CLAY ENCASED BETWEEN TWO 6 OZ/SY NON-WOVEN, NEEDLEPUNCHED GTX. THE GCL WILL ALSO BE NEEDLEPUNCHED FOR REINFORCEMENT

GEOCOMPOSITE DRAINAGE MATERIAL - GDM-DB & GDM-SB WILL HAVE A GEONET CORE COMPOSED OF HDPE AND A 6 OZ/SY NON-WOVEN, NEEDLEPUNCHED GTX BONDED TO ONE OR BOTH SIDES, AS APPLICABLE. THE TRANSMISSIVITY REQUIRED FOR EACH GDM USED IN THE CAP AND CELL CONSTRUCTION WILL BE DESIGNATED IN THE DESIGN SPECIFICATIONS.

GEOMEMBRANE - GMB WILL ALL BE HDPE AND OF THE THICKNESSES SHOWN ON THE DRAWINGS. THEY WILL ALL BE TEXTURED BOTH SIDES AND WHITE ONE SIDE, WITH THE WHITE SIDE INSTALLED FACING UP

GEOTEXTILE (SEPARATOR) - GTX WILL 6 OZ/SY NON-WOVEN, NEEDLEPUNCHED MATERIAL

DRAINAGE MEDIA FOR THE LEACHATE COLLECTION SYSTEM WILL BE GRANULAR MATERIAL HAVING A MINIMUM PERMEABILITY OF 1 X 10-2 CM/SEC

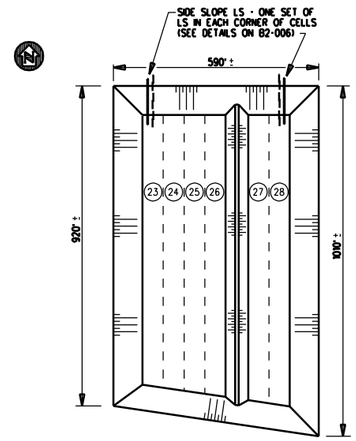

CELLS 23 THRU 28 OVERALL PLAN VIEW

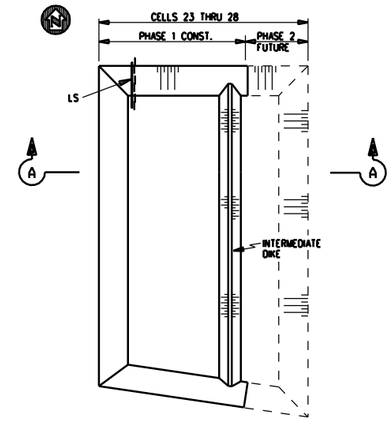

CELLS 23 THRU 28
PHASE 1 CONSTRUCTION

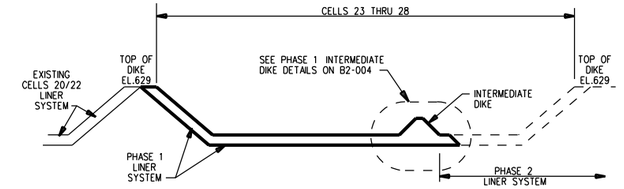

SECTION A-A
PHASE 1 CONSTRUCTION

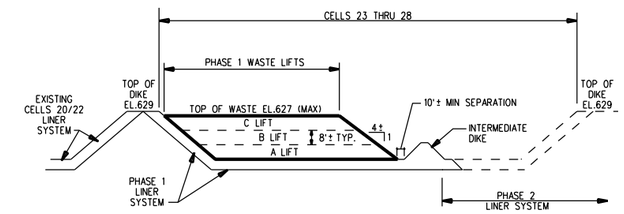

SECTION A-A
PHASE 1 WASTE PLACEMENT

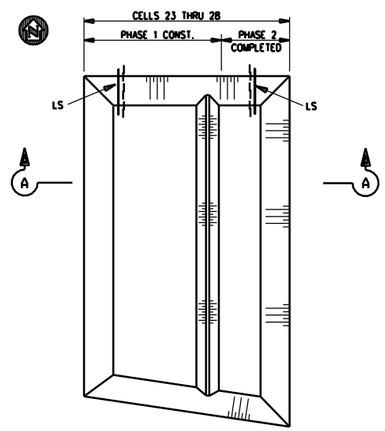

CELLS 23 THRU 28
PHASE 2 CONSTRUCTION

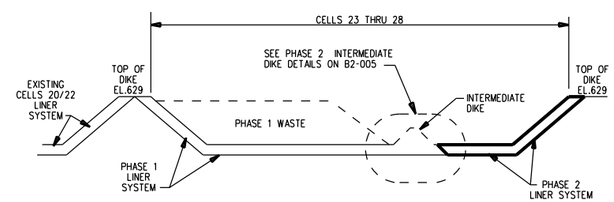

SECTION A-A
PHASE 2 CONSTRUCTION

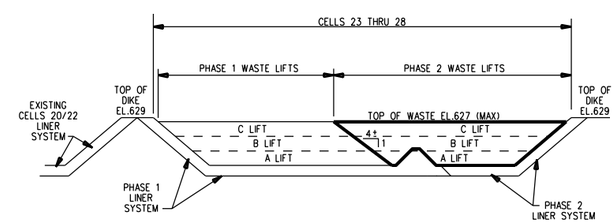

SECTION A-A
PHASE 2 WASTE PLACEMENT

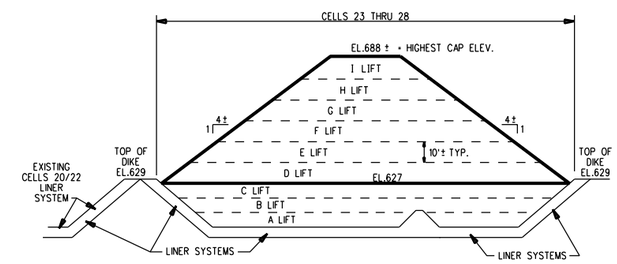

SECTION A-A
WASTE LIFTS ABOVE TOP OF DIKE ELEVATION

REV. MARK	REVISION	BY	CHK	APP	DATE
A	REVISED CONFIGURATION OF CELLS 23 THRU 28	LEG	JJA	JJA	2/08
B	DEFINED LINER SYSTEM IN GENERAL NOTES.	LEG	JJA	JJA	9/08

REV. MARK	REVISION	BY	CHK	APP	DATE

DRAWING ISSUE RECORD

ISSUE NO.	REV	MATERIAL OR JOB SPEC	BID	FAB	CONST	REF
			DATE ISSUED FOR			

DESIGNED	J.J. ALLEN	11/05
DRAWN	L.E. GIRARDIN	11/05
CHECKED	J.J.A.	11/05
APPROVED	J.J.A.	11/05
PROJ. ENGR.	J.J. ALLEN	11/05
MFG. REP.	STEVE LUCAS	11/05

STATUS | PLANT NO.
P.E. SEAL

THE DOW CHEMICAL COMPANY
MICHIGAN OPERATIONS — MIDLAND, MICHIGAN
SALZBURG LANDFILL — 3600 BLDG

CELLS 23-28 CONSTRUCTION-FILL SEQUENCE

EJN NUMBER	SCALE		REV.
114291	NONE	B2-003-1374	B

2 PLN

PRINTED | VER.

$PERSON $DATE $TIME $FILENAME $INSTRUCTIONS

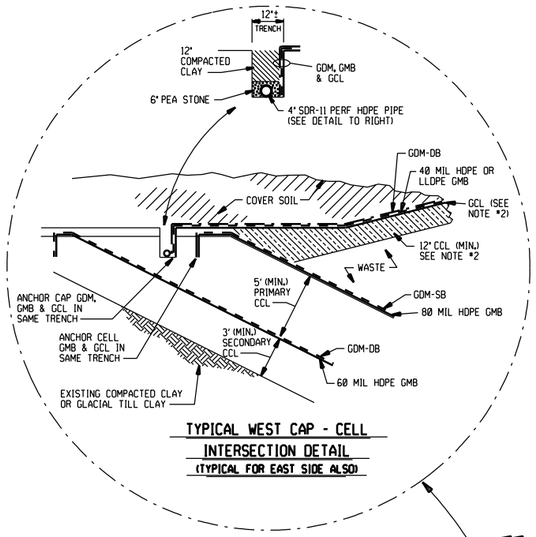

TYPICAL WEST CAP - CELL INTERSECTION DETAIL
(TYPICAL FOR EAST SIDE ALSO)

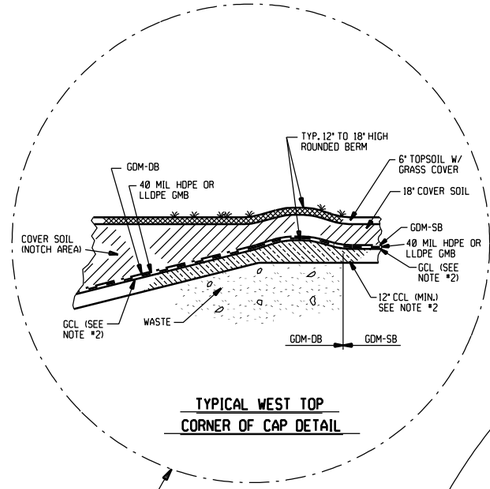

TYPICAL WEST TOP CORNER OF CAP DETAIL

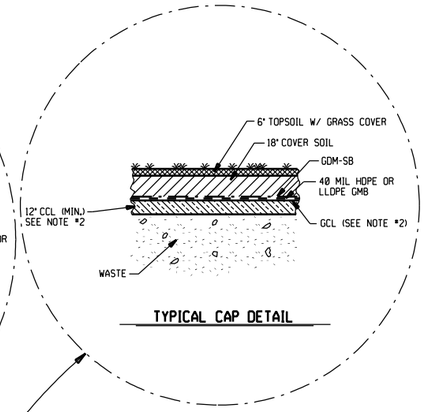

TYPICAL CAP DETAIL

NOTE:

1. THE MDEQ WILL ALLOW AN ALTERNATIVE "EQUIVALENT" DESIGN FOR THE PART 111 REQUIRMENTS OF:
   - A 3 FOOT THICK COMPACTED CLAY SECONDARY (BOTTOM) LINER WITH A MAX PERMEABILITY OF 1 x10-7 CM/SEC, AND,
   - THE 6 METERS OF NATURAL SOILS WITH A MAX PERMEABILITY OF 1 x10-6 CM/SEC BELOW & LATERALLY TO THE BOTTOM LINER

   THE EQUIVALENT DESIGN IS A 23 FOOT THICK LAYER OF NATURAL SOILS IMMEDIATELY BELOW THE SECONDARY SYNTHETIC LINER (60 MIL HDPE GEOMEMBRANE) HAVING AN AVERAGE PERMEABILITY OF 4.57 x10-7 CM/SEC OR LESS

2. THE MDEQ WILL ALLOW A GCL TO BE SUBSTITUTED FOR 2 FEET OF THE PART 111 REQUIRED 3 FOOT THICK COMPACTED CLAY CAP LINER IF EQUIVALENT ENVIRONMENTAL PROTECTION CAN BE DEMONSTRATED.

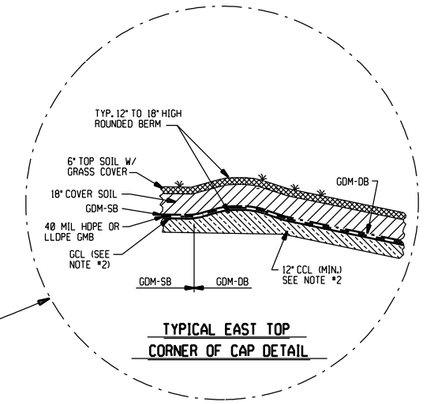

TYPICAL EAST TOP CORNER OF CAP DETAIL

LEGEND:

CCL = COMPACTED CLAY LINER

GCL = GEOSYNTHETIC CLAY LINER

GDM-DB = GEOCOMPOSITE DRAINAGE MATERIAL DOUBLE BONDED (GTX BOTH SIDES)

GDM-SB = GEOCOMPOSITE DRAINAGE MATERIAL SINGLE BONDED (GTX ONE SIDE)

GMB = GEOMEMBRANE

GNT = GEONET

GTX = GEOTEXTILE (SEPARATOR)

HDPE = HIGH DENSITY POLYETHYLENE

LLDPE = LINEAR LOW DENSITY POLYETHYLENE

LS = LIFT STATION

MH = MANHOLE

PERF = PERFORATED

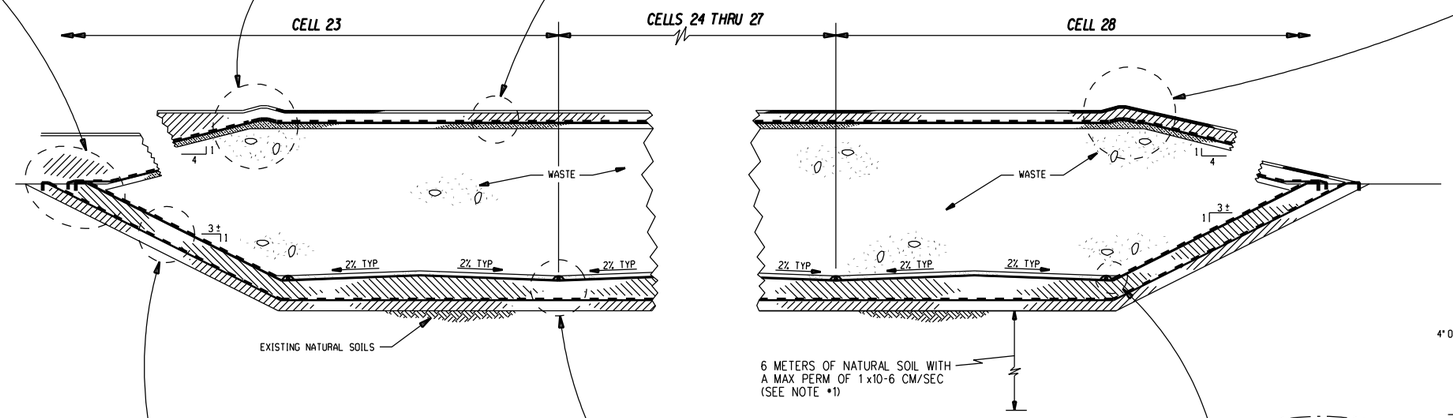

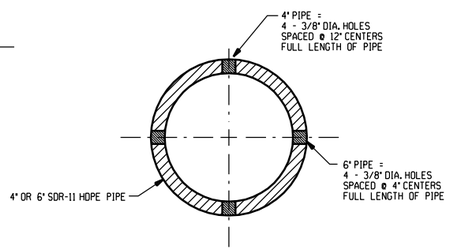

4" OR 6" PERFORATED HDPE COLLECTION PIPE (SDR-11)

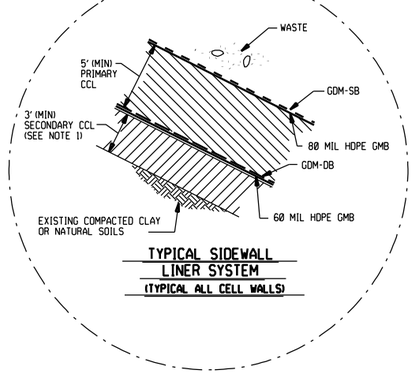

TYPICAL SIDEWALL LINER SYSTEM
(TYPICAL ALL CELL WALLS)

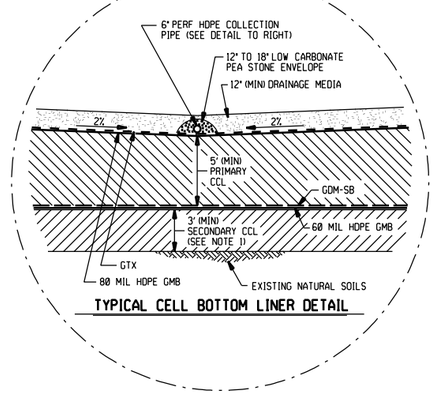

TYPICAL CELL BOTTOM LINER DETAIL

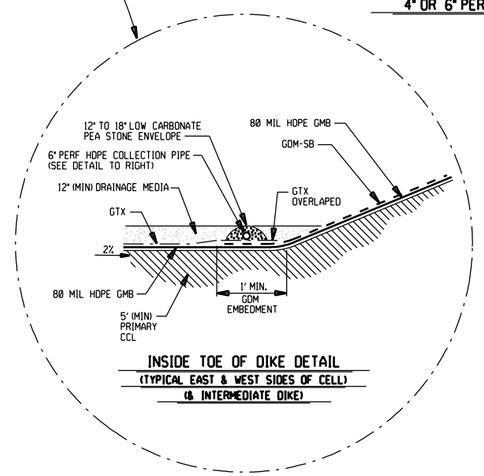

INSIDE TOE OF DIKE DETAIL
(TYPICAL EAST & WEST SIDES OF CELL)
(& INTERMEDIATE DIKE)

TYPICAL CELL & CAP EAST-WEST CROSS SECTION W/ LINER DETAILS

REV. MARK	REVISION	BY	CHK	APP	DATE
A	REVISED TO BE CONSISTENT WITH 2008 DESIGN TECHNOLOGY	LEG	JJA	JJA	2/08
B	REVISED TO SHOW 12" CCL UNDER GCL IN CAPPING SECTIONS	LEG	JJA	JJA	9/08
C	ADDED EQUIVALENCY NOTE FOR THE 3' SECONDARY CCL AND THE 6 METERS OF 1 x10-6 CM/SEC NATURAL SOILS	LEG	JJA	JJA	9/08
D	ADDED EQUIVALENCY NOTE FOR SUBSTITUTION OF A GCL FOR 2' OF THE 3' CAP CCL	LEG	JJA	JJA	9/08
E	ADDED LINEAR LOW DENSITY POLYETHYLENE AS POSSIBLE CAP GEOMEMBRANE	LEG	JJA	JJA	10/08

REV. MARK	REVISION	BY	CHK	APP	DATE

DRAWING ISSUE RECORD

ISSUE NO.	REV	MATERIAL OR JOB SPEC	BID	FAB	CONST	REF
			DATE ISSUED FOR			

DESIGNED	J.J. ALLEN	11/05
DRAWN	L.E. GIRARDIN	11/05
CHECKED	J.J.A.	11/05
APPROVED	J.J.A.	11/05
PROJ. ENGR.	J.J. ALLEN	11/05
MFG. REP.	STEVE LUCAS	11/05

STATUS | PLANT NO.
P.E. SEAL

THE DOW CHEMICAL COMPANY
MICHIGAN DIVISION — MIDLAND, MICHIGAN
SALZBURG LANDFILL — 3600 BLDG.

APPENDIX 15
CELLS 23-28 EAST-WEST CROSS SECTION

EJN NUMBER	SCALE		REV.
114291	NONE	B2-007-1374	E

2 UND

PRINTED | VER.

$INSTRUCTIONS $FILENAME $TIME $DATE $PERSON

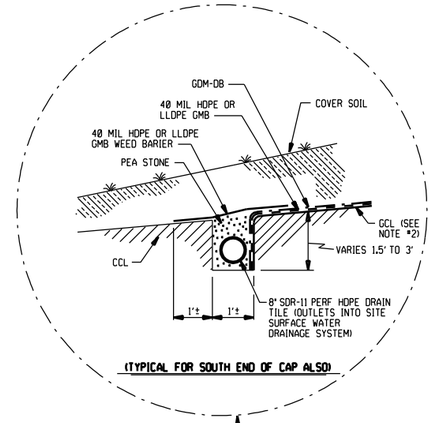

(TYPICAL FOR SOUTH END OF CAP ALSO)

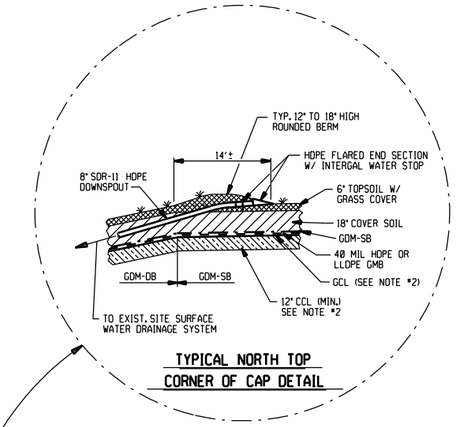

TYPICAL NORTH TOP CORNER OF CAP DETAIL

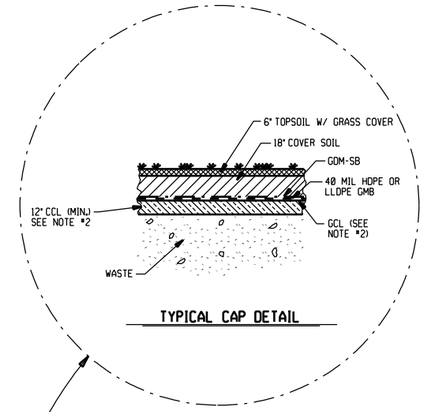

TYPICAL CAP DETAIL

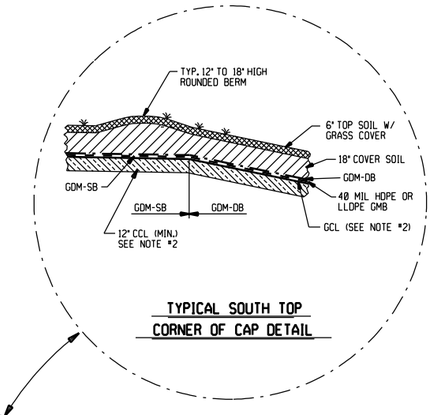

TYPICAL SOUTH TOP CORNER OF CAP DETAIL

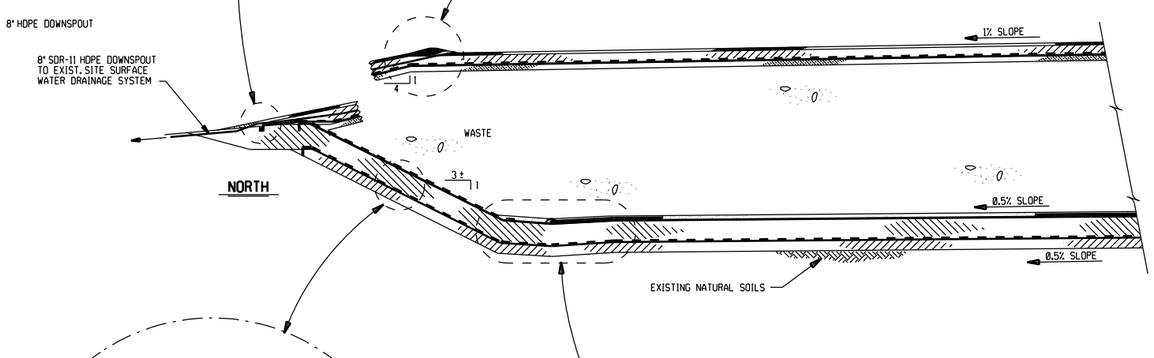

NORTH

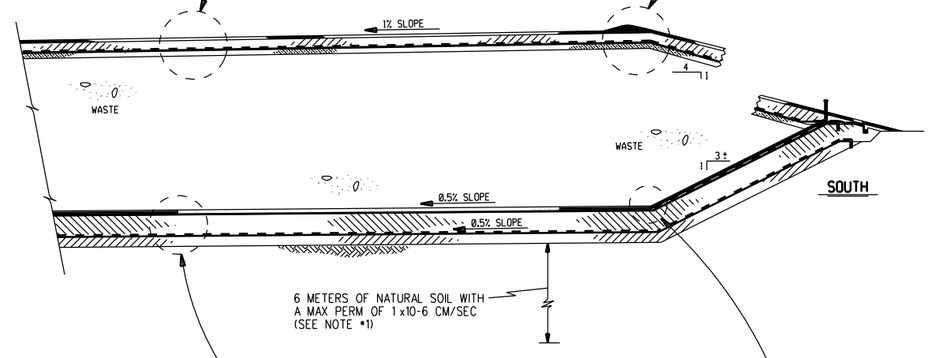

SOUTH

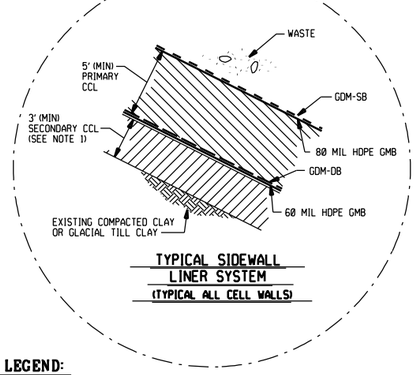

TYPICAL SIDEWALL LINER SYSTEM
(TYPICAL ALL CELL WALLS)

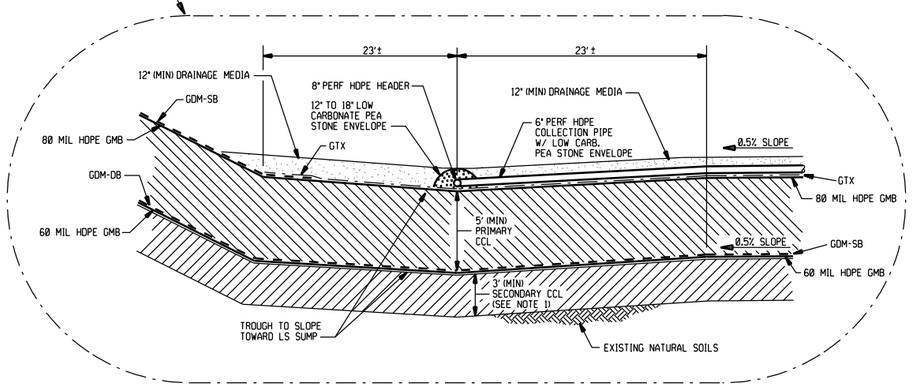

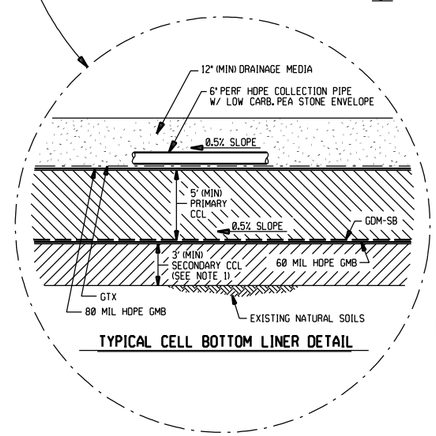

TYPICAL CELL BOTTOM LINER DETAIL

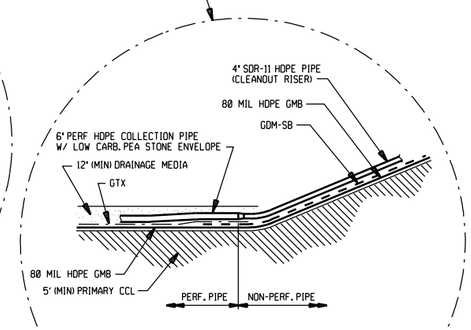

INSIDE TOE OF DIKE DETAIL
(TYPICAL SOUTH END OF CELL)

LEGEND:

SEE B2-007

NOTE:

1. THE MDEQ WILL ALLOW AN ALTERNATIVE "EQUIVALENT" DESIGN FOR THE PART 111 REQUIRMENTS OF:
   - A 3 FOOT THICK COMPACTED CLAY SECONDARY (BOTTOM) LINER WITH A MAX PERMEABILITY OF 1 x10-7 CM/SEC, AND,
   - THE 6 METERS OF NATURAL SOILS WITH A MAX PERMEABILITY OF 1 x10-6 CM/SEC BELOW & LATERALLY TO THE BOTTOM LINER

   THE EQUIVALENT DESIGN IS A 23 FOOT THICK LAYER OF NATURAL SOILS IMMEDIATELY BELOW THE SECONDARY SYNTHETIC LINER (60 MIL HDPE GEOMEMBRANE) HAVING AN AVERAGE PERMEABILITY OF 4.57 x10-7 CM/SEC OR LESS
2. THE MDEQ WILL ALLOW A GCL TO BE SUBSTITUTED FOR 2 FEET OF THE PART 111 REQUIRED 3 FOOT THICK COMPACTED CLAY CAP LINER IF EQUIVALENT ENVIRONMENTAL PROTECTION CAN BE DEMONSTRATED.

TYPICAL CELL & CAP NORTH-SOUTH CROSS SECTION W/ LINER DETAILS

REV. MARK	REVISION	BY	CHK	APP	DATE
A	REVISED TO BE CONSISTENT WITH 2008 DESIGN TECHNOLOGY	LEG	JJA	JJA	2/08
B	REVISED TO SHOW 12" CCL UNDER GCL IN CAPPING SECTIONS	LEG	JJA	JJA	9/08
C	ADDED EQUIVALENCY NOTE FOR THE 3' SECONDARY CCL AND THE 6 METERS OF 1 x10-6 CM/SEC NATURAL SOILS	LEG	JJA	JJA	9/08
D	ADDED EQUIVALENCY NOTE FOR SUBSTITUTION OF A GCL FOR 2' OF THE 3' CAP CCL	LEG	JJA	JJA	9/08
E	ADDED LINEAR LOW DENSITY POLYETHYLENE AS POSSIBLE CAP GEOMEMBRANE	LEG	JJA	JJA	10/08

REV. MARK	REVISION	BY	CHK	APP	DATE

DRAWING ISSUE RECORD

ISSUE NO.	REV	MATERIAL OR JOB SPEC	BID	FAB	CONST	REF
			DATE ISSUED FOR			

DESIGNED	J.J. ALLEN	11/05
DRAWN	L.E. GIRARDIN	11/05
CHECKED	J.J.A.	11/05
APPROVED	J.J.A.	11/05
PROJ. ENGR.	J.J. ALLEN	11/05
MFG. REP.	STEVE LUCAS	11/05

STATUS | PLANT NO.

P.E. SEAL

THE DOW CHEMICAL COMPANY

MICHIGAN DIVISION — MIDLAND, MICHIGAN

SALZBURG LANDFILL — 3600 BLDG.

APPENDIX 15

CELLS 23-28 NORTH-SOUTH CROSS SECTION

EJN NUMBER	SCALE		REV.
114291	NONE	B2-008-1374	E

2 UND

PRINTED | VER.

SPECSON | DATE | TIME | FILENAME | INSTRUCTIONS

GENERAL NOTES:

1. CONTRACTOR WILL FURNISH ALL HDPE PIPE, FITTINGS, FUSION COUPLINGS, BOOT ASSEMBLIES, FABRICATED PIECES AND OTHER MISCELLANEOUS HDPE PIECES. CONTRACTOR SHALL PERFORM ALL HDPE WELDING REQUIRED TO COMPLETE THE INSTALLATION.
2. THE CONTRACTOR SHALL FURNISH ALL STAINLESS STEEL (SS) BOLTS, NUTS AND OTHER CONNECTORS REQUIRED TO INSTALL THE HDPE PIPE, FITTINGS AND FABRICATED PIECES
   - NON-PRESSURE HDPE FLANGED CONNECTIONS UP TO 12 INCHES IN DIAMETER SHALL RECEIVE 4 BOLTS PER FLANGE
   - NON-PRESSURE HDPE FLANGED CONNECTIONS GREATER THAN 12 INCHES IN DIAMETER SHALL RECEIVE 6 BOLTS PER FLANGE
   - ALL PRESSURE HDPE FLANGED CONNECTIONS UP SHALL RECEIVE THEIR FULL COMPLEMENT OF BOLTS FOR EACH FLANGE
3. CONTRACTOR WILL FURNISH ALL TX1200 MATERIAL
4. THE CONTRACTOR SHALL SALVAGE AND REUSE ALL EXISTING TIRE STRINGS THAT MUST BE REMOVED TO CARRY OUT THE PROPOSED WORK

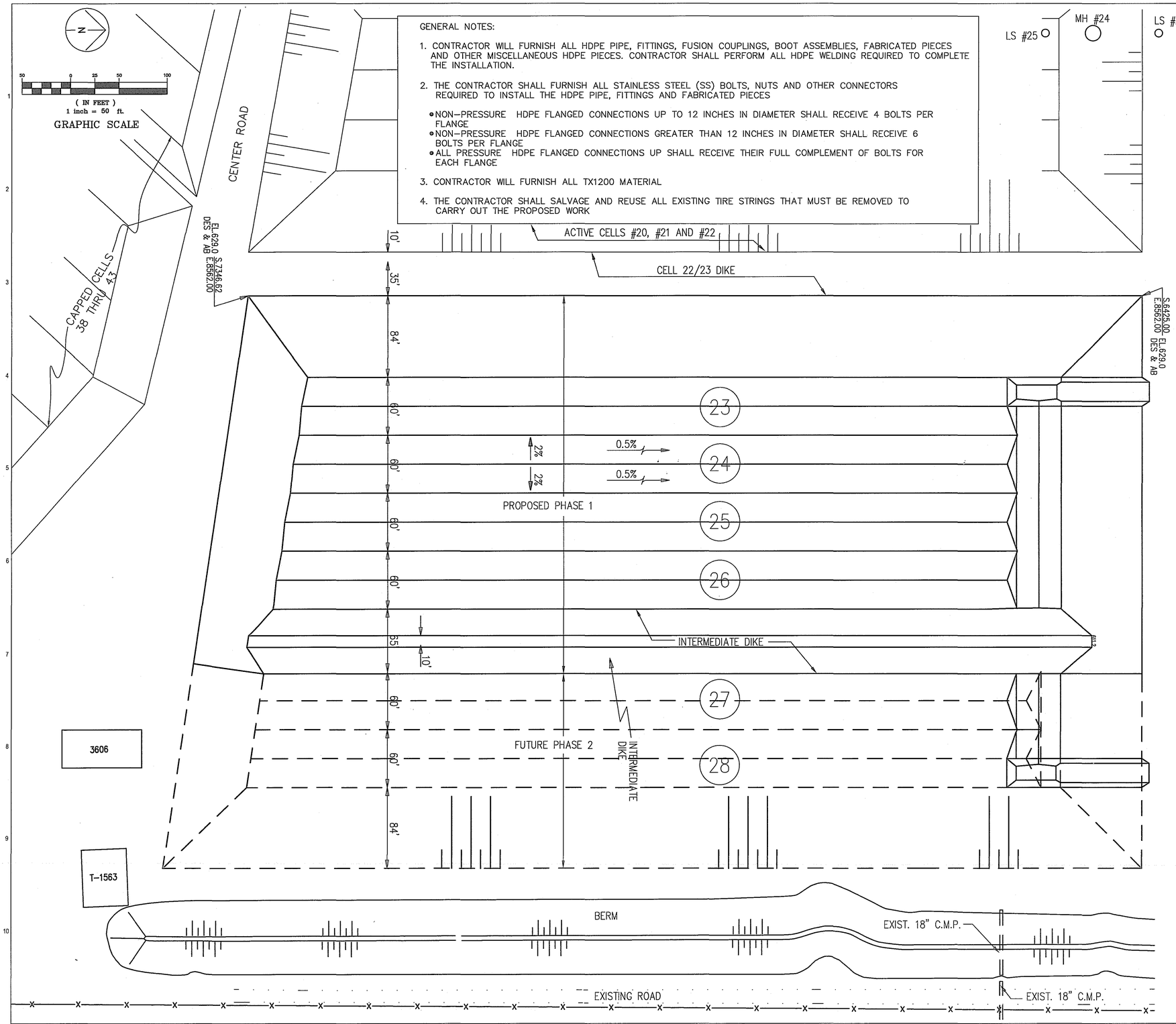

ACRONYMS

CCL =	COMPACTED CLAY LINER
GMB =	GEOMEMBRANE
GTX =	GEOTEXTILE (SEPARATOR)
GDM-DB =	GEOCOMPOSITE DRAINAGE MATERIAL DOUBLE BONDED (GTX BOTH SIDES)
GDM-SB =	GEOCOMPOSITE DRAINAGE MATERIAL SINGLE BONDED (GTX ONE SIDE)
HDPE =	HIGH DENSITY POLYETHYLENE
LS =	LIFT STATION
MH =	MANHOLE
PERF =	PERFORATED
PSL =	PRIMARY SYNTHETIC LINER OR GMB
SSL =	SECONDARY SYNTHETIC LINER OR GMB
TRX GDM-SB =	HIGH FLOW CAPACITY GEOCOMPOSITE DRAINAGE MATERIAL FOR FLOOR PORTION OF LEAK DETECTION SYSTEM
LDS =	LEAK DETECTION SYSTEM
LCS =	LEACHATE COLLECTION SYSTEM

SHEET INDEX

NUMBER	DESCRIPTION
B2-001	GENERAL PLAN
B2-002	EXISTING TOPOGRAPHY
B2-003	SUBGRADE PLAN
B2-003A	SSL AND GDM PLAN
B2-004	SUBGRADE SECTIONS A-A AND B-B
B2-005	SUBGRADE SECTIONS C-C AND D-D
B2-006	SUBGRADE SECTIONS E-E AND F-F
B2-007	SUBGRADE SECTIONS G-G AND H-H
B2-008	NORTH WALL SUBGRADE SECTIONS
B2-009	SOUTH WALL SUBGRADE SECTIONS
B2-010	LEAK DETECTION SYSTEM SUMP AND PIPING PLAN
B2-011	FINISHED CLAY PLAN
B2-012	LEACHATE COLLECTION SYSTEM PIPING PLAN
B2-012A	PSL, GDM AND GTX PLAN
B2-013	LEACHATE COLLECTION SYSTEM SUMP AND PIPING PLAN
B2-014	FINISHED CLAY SECTIONS A-A AND B-B
B2-015	FINISHED CLAY SECTIONS C-C AND D-D
B2-016	FINISHED CLAY SECTIONS E-E AND F-F
B2-017	FINISHED CLAY SECTIONS G-G AND H-H
B2-018	NORTH WALL FINISHED CLAY SECTIONS
B2-019	SOUTH WALL FINISHED CLAY SECTIONS
B2-020	TYPICAL INTERMEDIATE DIKE SECTION
B2-021	TYPICAL EAST-WEST FLOOR PROFILE
B2-022	PROFILE THROUGH LDS AND LCS HEADER PIPES
B2-023	TYPICAL CROSS SECTION THROUGH NORTH WALL
B2-024	SECTIONS THROUGH 24 INCH LS RISERS
B2-025	TYPICAL HEADER TROUGH PROFILE
B2-026	24 INCH AND 6 INCH RISER PIPE DETAILS
B2-027	CELLS 22/23 TOP OF DIKE & ANCHOR TRENCH DETAILS
B2-028	STAND PIPE AND TIRE STRING DETAILS
B2-029	12 INCH GRAVITY SEWER BOOT DETAILS
B2-032	NORTH CULVERT PLAN
B2-033	SOUTH CULVERT PLAN
B2-034	ACCESS RAMP
B2-035	PRIMARY LINER ASBUILT CONDITIONS
B2-036	SECONDARY LINER ASUILT CONDITIONS
B2-101	LS DISCHARGE PIPING & CONDUIT PLAN
B2-102	LS DISCHARGE PIPING SECTIONS
B2-103	LS ABOVE GROUND DISCHARGE PIPING DETAILS
B2-104	LS DISCHARGE PIPING METER RUN
B2-105	LS PIPE SUPPORT DETAILS
B2-106	LS ELECTRIC PANEL SUPPORT DETAILS
B2-107	ACCESS STAIR DETAILS

REV. MARK	REVISION	BY	CHK	APP	DATE
A	ADDED SHEETS B2-032 THRU B2-036				

CONSULTANT

URS

URS CORPORATION
MIDLAND, MI
23 BUILDING, DOOR 1

URS PROJECT NUMBER: 41569617

DRAWING ISSUE RECORD

ISSUE NO.	REV	MATERIAL OR JOB SPEC	BID	FAB	CONST	REF
2	0	RECORD DRAWINGS				1/2015
1	A	FOR CONSTRUCTION			3/2014	

DATE ISSUED FOR

DESIGNED	URS CORPORATION	6/2008
DRAWN	URS CORPORATION	6/2008
CHECKED	URS CORPORATION	6/2008
APPROVED	J. ALLEN	6/2008
PROJ. ENGR.	J. ALLEN	6/2008
MFG. REP.	K. DETRICH	6/2008

STATUS
P.E. SEAL
PLANT NO.

DOW THE DOW CHEMICAL COMPANY
MICHIGAN OPERATIONS — MIDLAND, MICHIGAN
PROJECT — 3609 BLDG

SALZBURG LANDFILL
PHASE 1 - CELLS 23 THROUGH 28 PROJECT
TITLE SHEET

PROJECT NUMBER	SCALE		REV.
119217	AS SHOWN	B2-001-119217	0

PRINTED
VER.

STATE OF MICHIGAN
MICHAEL J. STEPIC
ENGINEER NO. 60457
LICENSED PROFESSIONAL ENGINEER

SEE B2-013 FOR CONTINUATION

SALZBURG ROAD

66' ROAD R.O.W.

22' C.P.CO. ESMT.

EXIST. FENCE

VISUAL BERM

EXIST. ACCESS ROAD

90 GATE

91 GATE

92 GATE

93 GATE

94 GATE

CSX R.R.

ROADWAY

WALDO ROAD

3600

3601

3605 BLDG.

3606 BLDG.

3602

M.H. #1

M.H. #2

M.H. #3

M.H. #4

M.H. #5

M.H. #6

M.H. #7

M.H. #8

M.H. #9

M.H. #10

M.H. #11

M.H. #12

M.H. #13

M.H. #14

M.H. #15

M.H. #16

M.H. #17

M.H. #18

M.H. #24

L.S. #2-A

L.S. #3-A

L.S. #4

L.S. #5

L.S. #6

L.S. #7

L.S. #8

L.S. #9

L.S. #10

L.S. #11

L.S. #12

L.S. #13

L.S. #19

L.S. #20

L.S. #21

L.S. #23

L.S. #25

L.S. #26

L.S. #51

3" PE

4" PE

6" PE

8" PE

12" PE

3" PE W/ 8" PE CASING

4" PE W/ 8" PE CASING

12" PE INSIDE 18" PE CASING

20" STL. CASING

100' R.O.W.

6" PE INSIDE 12" PE

SCALE

0' 50' 100' 200'

LEGEND

- LEACHATE SYSTEM COLLECTION LINES (UNDERGROUND)
- LINER FAILURE DETECTION SYSTEM COLLECTION LINES (UNDERGROUND)
- SEWER LINES (UNDERGROUND)
- ABOVE GROUND LINES
- 00 HAZARDOUS WASTE CELL
- 00 NON-HAZARDOUS WASTE CELL
- ✱ = LEACHATE COLLECTION SYSTEM SAMPLING POINTS (ALL SAMPLES TAKEN AT LIFT STATIONS - LS)

1. LS #2-A (CELLS 3, 4 & 5)
2. LS #5 (CELLS 6, 7 & 8)
3. LS #7 (CELLS 9 & 10)
4. LS #9 (CELLS 11 & 12)
5. LS #13 (CELLS 13 & 14)
6. LS #19 (CELLS 15 & 16)
7. LS #23 (CELLS 17, 18 & 19)
8. LS #25 (CELLS 20, 21 & 22)

- ▲ = LINER FAILURE DETECTION SYSTEM SAMPLING POINTS (ALL SAMPLES TAKEN AT LIFT STATIONS - LS)

1. LS #3-A (CELLS 3, 4 & 5)
2. LS #6 (CELLS 6, 7 & 8)
3. LS #8 (CELLS 9 & 10)
4. LS #11 (CELLS 11 & 12)
5. LS #12 (CELLS 13 & 14)
6. LS #20 (CELLS 15 & 16)
7. LS #21 (CELLS 17, 18 & 19)
8. LS #26 (CELLS 20, 21 & 22)

MATCH LINE - SEE B2-013

REV. MARK	REVISION	BY	CHK	APP	DATE	REV. MARK	REVISION	BY	CHK	APP	DATE

DRAWING ISSUE RECORD

ISSUE NO.	REV	MATERIAL OR JOB SPEC	BID	FAB	CONST	REF
			DATE ISSUED FOR			

DESIGNED	J.J. ALLEN	11/05
DRAWN	L.E. GIRARDIN	11/05
CHECKED	J.J.A.	11/05
APPROVED	J.J.A.	11/05
PROJ. ENGR.	J.J. ALLEN	11/05
MFG. REP.	STEVE LUCAS	11/05

STATUS | PLANT NO.

P.E. SEAL

THE DOW CHEMICAL COMPANY

MICHIGAN DIVISION — MIDLAND, MICHIGAN

SALZBURG LANDFILL — 3600 BLDG

APPENDIX 8

SITE SEWERS & SAMPLING POINTS MAP

(SHEET 1 OF 2)

EJN NUMBER	SCALE		REV.
114291	1" = 100'-0"	B2-104-1374	

PRINTED | VER.

2 PLN

STRSTRUCTURES | SITEUSE | SITEUSE | SPERSON

[redacted]

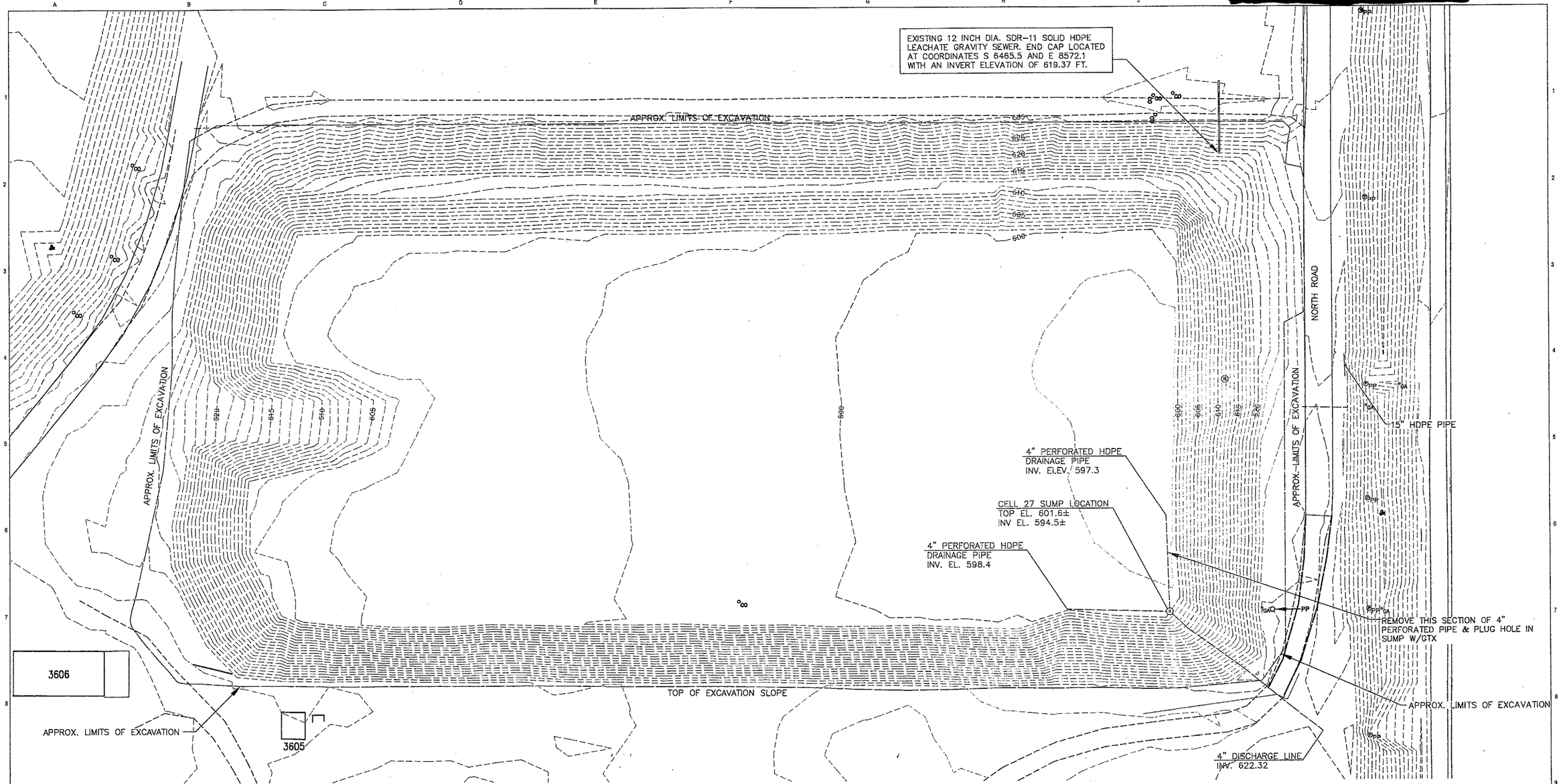

NOTES:

1. ALL ELEVATIONS SHOWN ARE REFERENCED TO THE NATIONAL GEODETIC VERTICAL DATUM OF 1929 (NGVD29)

2. BENCHMARK #1 IS A NAIL IN THE SOUTHWEST FACE OF POWER POLE NORTH OF CELLS 20-22

3. BENCHMARK #2 IS A NAIL IN THE SOUTH FACE OF POWER POLE PE-36 SOUTH SOUTHEAST OF BUILDING 3606

4. THE TOPOGRAPHIC SURVEY OUTSIDE THE LIMITS OF EXCAVATION WAS PROVIDED BY WADE TRIM. THE TOPOGRAPHIC SURVEY WITHIN THE LIMITS OF EXCAVATION WAS COMPLETED BY URS.

BENCHMARK SCHEDULE

DESCRIPTION	DOW COORDINATES		ELEVATION
BENCHMARK #1	S 6343.08	E 8443.18	629.98
BENCHMARK #2	S 7546.28	E 9091.54	628.43

LEGEND

TRAVERSE POINT
BENCHMARK BM
POWER POLE PP
GUY WIRE ANCHOR GA
CLEAN OUT CO
STORM MANHOLE SM
SUMP LOCATION
BUILDING
EDGE OF ASPHALT PAVEMENT
EDGE OF GRAVEL ROADWAY
FENCE LINE
GTX = GEOTEXTILE

EXISTING MINOR CONTOUR ----619----
EXISTING MAJOR CONTOUR ----620----
APPROX. LIMITS OF EXCAVATION

N

40 0 20 40 80
(IN FEET)
1 inch = 40 ft.
GRAPHIC SCALE

REV. MARK	REVISION	BY	CHK	APP	DATE
A	ADDED SHEETS B2-032 THRU B2-035				

CONSULTANT

URS

URS CORPORATION
MIDLAND, MI
25 BUILDING, DOOR 1

URS PROJECT NUMBER: 41569617

DRAWING ISSUE RECORD

ISSUE NO.	REV	MATERIAL OR JOB SPEC	BID	FAB	CONST	REF
2	0	RECORD DRAWINGS				1/2015
1	A	FOR CONSTRUCTION			3/2014	

DATE ISSUED FOR

DESIGNED	URS CORPORATION	6/2008
DRAWN	URS CORPORATION	6/2008
CHECKED	URS CORPORATION	6/2008
APPROVED	J. ALLEN	6/2008
PROJ. ENGR.	J. ALLEN	6/2008
MPG. REP.	K. DETRICH	6/2008

STATUS | PLANT NO.
P.E. SEAL

DOW THE DOW CHEMICAL COMPANY
MICHIGAN OPERATIONS MIDLAND, MICHIGAN
PROJECT 3600 BLDG
SALZBURG LANDFILL
PHASE 1 - CELLS 23 THROUGH 28 PROJECT
EXISTING TOPOGRAPHY

PROJECT NUMBER 119217 | SCALE AS SHOWN | B2-002-119217 | REV. 0

PRINTED | VER.

STATE OF MICHIGAN
MICHAEL J. STEPIC
ENGINEER
NO. 60457
LICENSED PROFESSIONAL ENGINEER

NOTE: SEE CELL 22 AND CELL 23 TOP OF DIKE DETAIL ON SHEET B2-027 FOR REMOVAL OF MATERIALS ON WEST DIKE

EXISTING 12 INCH DIA. SDR-11 SOLID HDPE LEACHATE GRAVITY SEWER, END CAP LOCATED AT COORDINATES S 6465.5 AND E 8572.1 WITH AN INVERT ELEVATION OF 619.37 FT. SEE BOOT DETAIL ON SHEET B2-029.

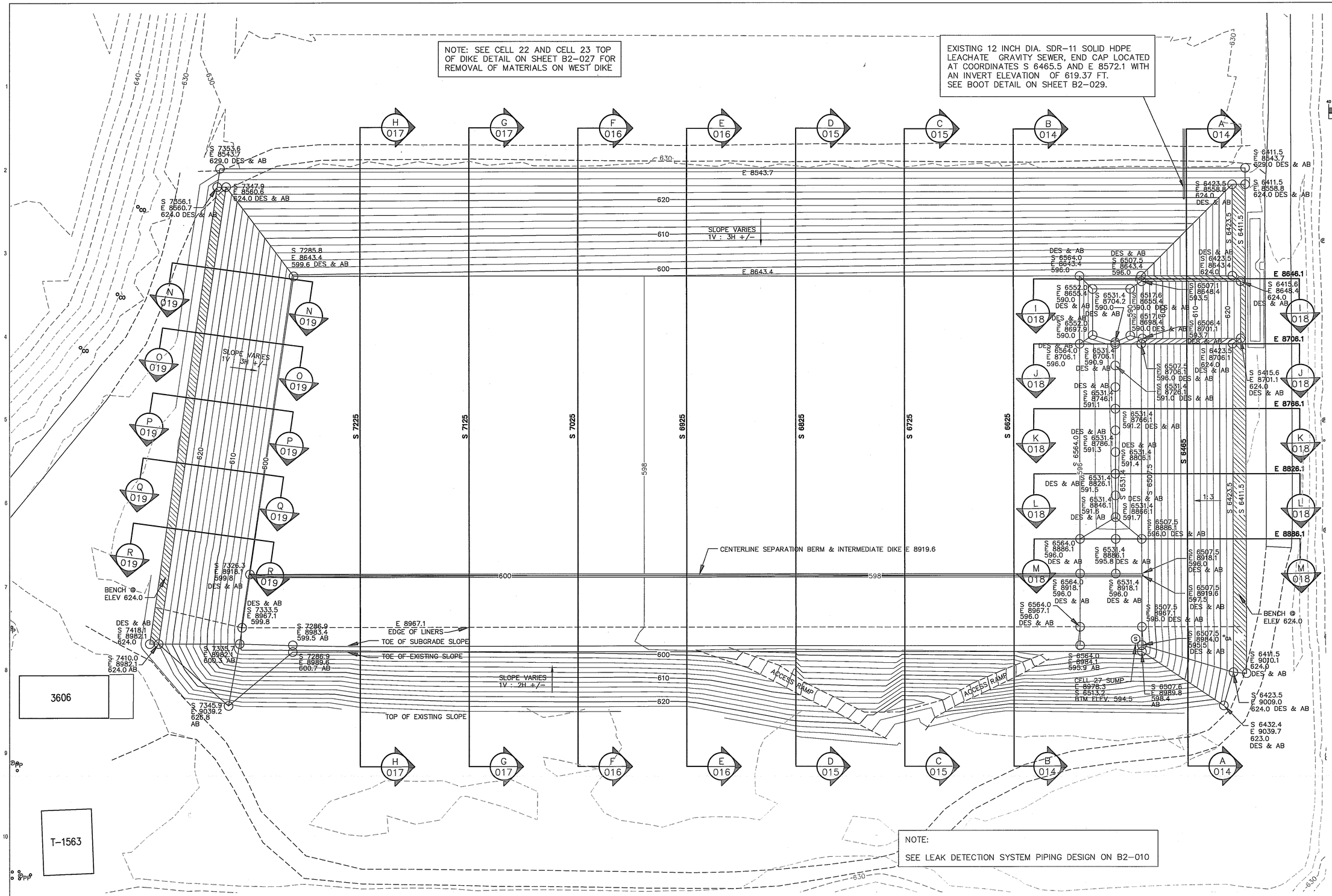

NOTE:

SEE LEAK DETECTION SYSTEM PIPING DESIGN ON B2-010

(IN FEET)
1 inch = 40 ft.
GRAPHIC SCALE

LEGEND

- CROSS-SECTION NAME — A 004
- SHEET CROSS SECTION SHOWN ON
- SUBGRADE BREAKLINE
- SURVEY COORDINATE — S 6564.0 E 8706.1 596.0
- PROPOSED MINOR CONTOUR — 619
- PROPOSED MAJOR CONTOUR — 620
- EXISTING MINOR CONTOUR — 619
- EXISTING MAJOR CONTOUR — 620

REV. MARK	REVISION	BY	CHK	APP	DATE
A	ADDED SHEETS B2-022 THRU B2-026				

CONSULTANT: URS

URS CORPORATION
MIDLAND, MI
29 BUILDING, DOOR 1

URS PROJECT NUMBER: 41569617

DRAWING ISSUE RECORD

ISSUE NO.	REV	MATERIAL OR JOB SPEC	BID	FAB	CONST	REF
2	0	RECORD DRAWINGS				1/2015
1	A	FOR CONSTRUCTION			3/2014	

DATE ISSUED FOR

DESIGNED	URS CORPORATION	6/2008
DRAWN	URS CORPORATION	6/2008
CHECKED	URS CORPORATION	6/2008
APPROVED	J. ALLEN	6/2008
PROJ. ENGR.	J. ALLEN	6/2008
MFG. REP.	K. DETRICH	6/2008

STATUS | PLANT NO.

P.E. SEAL

THE DOW CHEMICAL COMPANY
MICHIGAN OPERATIONS — MIDLAND, MICHIGAN

PROJECT: SALZBURG LANDFILL
PHASE 1 - CELLS 23 THROUGH 28 PROJECT
SUBGRADE PLAN

3600 BLDG

PROJECT NUMBER	SCALE		REV.
119217	AS SHOWN	B2-003-119217	0

PRINTED | VER.

STATE OF MICHIGAN — MICHAEL J. STEPIC ENGINEER NO. 60457 — LICENSED PROFESSIONAL ENGINEER

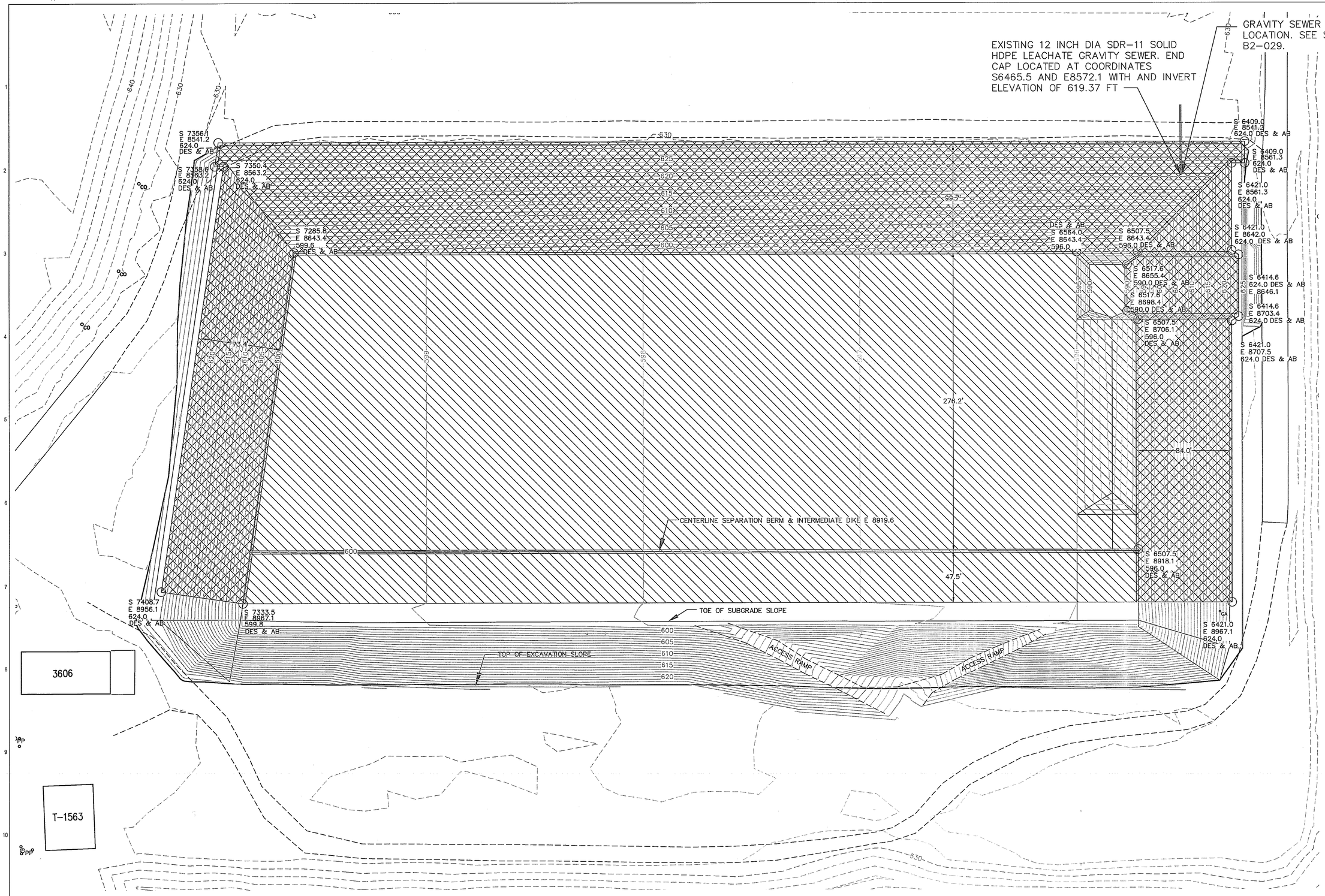

GRAPHIC SCALE

(IN FEET)
1 inch = 40 ft.

LEGEND

- SUBGRADE BREAKLINE
- SURVEY COORDINATE S 6564.0 E 8706.1 596.0
- PROPOSED MINOR CONTOUR — 619
- PROPOSED MAJOR CONTOUR — 620
- EXISTING MINOR CONTOUR — 619
- EXISTING MAJOR CONTOUR — 620
- SSL AND TRx GDM-SB
- SSL AND GDM-DB

REV. MARK	REVISION	BY	CHK	APP	DATE
A	ADDED SHEETS B2-032 THRU B2-035				

CONSULTANT

URS

URS CORPORATION
MIDLAND, MI
25 BUILDING, DOOR 1

URS PROJECT NUMBER: 41569617

DRAWING ISSUE RECORD

ISSUE NO.	REV	MATERIAL OR JOB SPEC	BID	FAB	CONST	REF
2	0	RECORD DRAWINGS				1/2015
1	A	FOR CONSTRUCTION			3/2014	

DATE ISSUED FOR

DESIGNED	URS CORPORATION	6/2008
DRAWN	URS CORPORATION	6/2008
CHECKED	URS CORPORATION	6/2008
APPROVED	J. ALLEN	6/2008
PROJ. ENGR.	J. ALLEN	6/2008
MFG. REP.	K. DETRICH	6/2008

STATUS | PLANT NO.

P.E. SEAL

DOW THE DOW CHEMICAL COMPANY

MICHIGAN OPERATIONS — MIDLAND, MICHIGAN

PROJECT — 3600 BLDG

SALZBURG LANDFILL
PHASE 1 - CELLS 23 THROUGH 28 PROJECT
SSL AND GDM PLAN

PROJECT NUMBER	SCALE		REV.
119217	AS SHOWN	B2-003A-119217	0

PRINTED | VER.

STATE OF MICHIGAN
MICHAEL J. STEPIC
ENGINEER
NO. 60457
LICENSED PROFESSIONAL ENGINEER

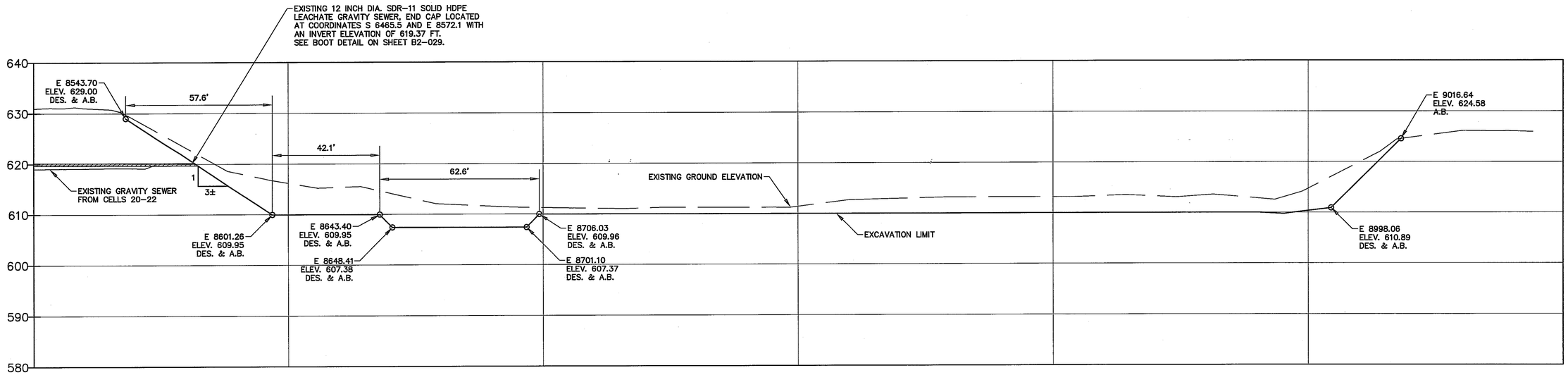

SUBGRADE SECTION A-A LOOKING NORTH @ S 6465 (FROM B2-003-855)

SCALE: HORIZ. 1" = 20', VERT. 1" = 10'

NOTE: THIS SECTION IS THROUGH THE NORTH WALL. THE DIMENSIONS GIVEN ARE PERPENDICULAR TO THE SLOPE OF THE WEST WALL

NOTE: SEE SECTION 2 OF THE SPECIFICATIONS FOR SUBGRADE PREPARATION REQUIREMENTS.

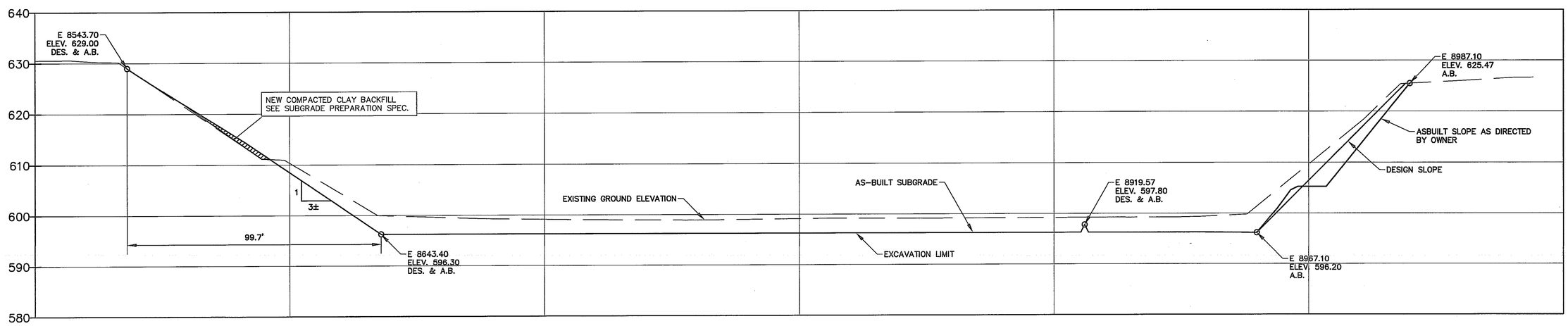

SUBGRADE SECTION B-B LOOKING NORTH @ S 6625 (FROM B2-003-855)

SCALE: HORIZ. 1" = 20', VERT. 1" = 10'

REV. MARK	REVISION	BY	CHK	APP	DATE
A	ADDED SHEETS B2-022 THRU B2-035				

CONSULTANT

URS

URS CORPORATION
MIDLAND, MI
25 BUILDING, DOOR 1

URS PROJECT NUMBER: 41589617

DRAWING ISSUE RECORD

ISSUE NO.	REV	MATERIAL OR JOB SPEC	BID	FAB	CONST	REF
2	0	RECORD DRAWINGS				1/2015
1	A	FOR CONSTRUCTION			3/2014	

DATE ISSUED FOR

DESIGNED	URS CORPORATION	6/2008
DRAWN	URS CORPORATION	6/2008
CHECKED	URS CORPORATION	6/2008
APPROVED	J. ALLEN	6/2008
PROJ. ENGR.	J. ALLEN	6/2008
MFG. REP.	K. DETRICH	6/2008

STATUS | PLANT NO.

P.E. SEAL

DOW THE DOW CHEMICAL COMPANY

MICHIGAN OPERATIONS — MIDLAND, MICHIGAN

PROJECT — 3600 BLDG

SALZBURG LANDFILL
PHASE 1 - CELLS 23 THROUGH 28 PROJECT
SUBGRADE SECTIONS A-A AND B-B

PROJECT NUMBER	SCALE		REV.
119217	AS SHOWN	B2-004-119217	0

PRINTED | VER.

STATE OF MICHIGAN
MICHAEL J. STEFIC
ENGINEER
NO. 60457
LICENSED PROFESSIONAL ENGINEER

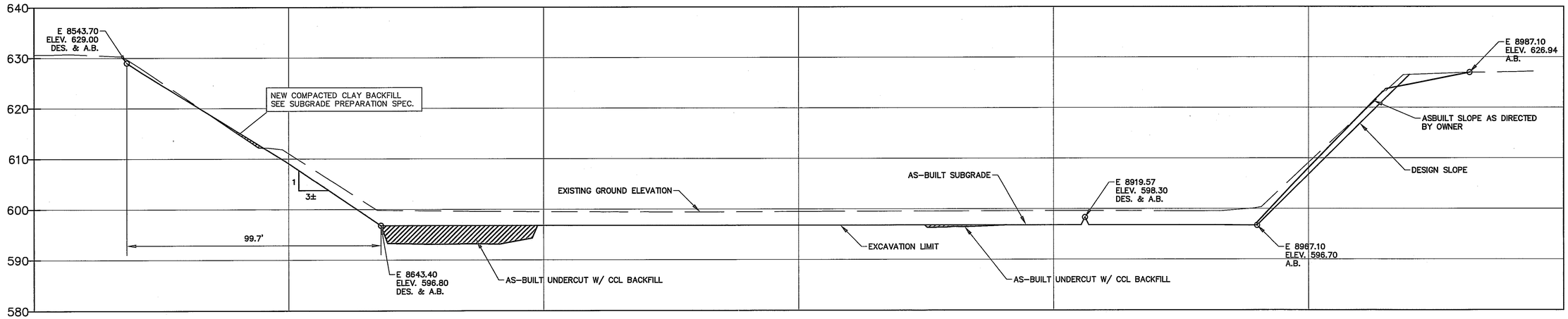

SUBGRADE SECTION C-C LOOKING NORTH @ S 6725' (FROM B2-003-855)

SCALE: HORIZ. 1" = 20', VERT. 1" = 10'

NOTE: SEE SECTION 2 OF THE SPECIFICATIONS FOR SUBGRADE PREPARATION REQUIREMENTS.

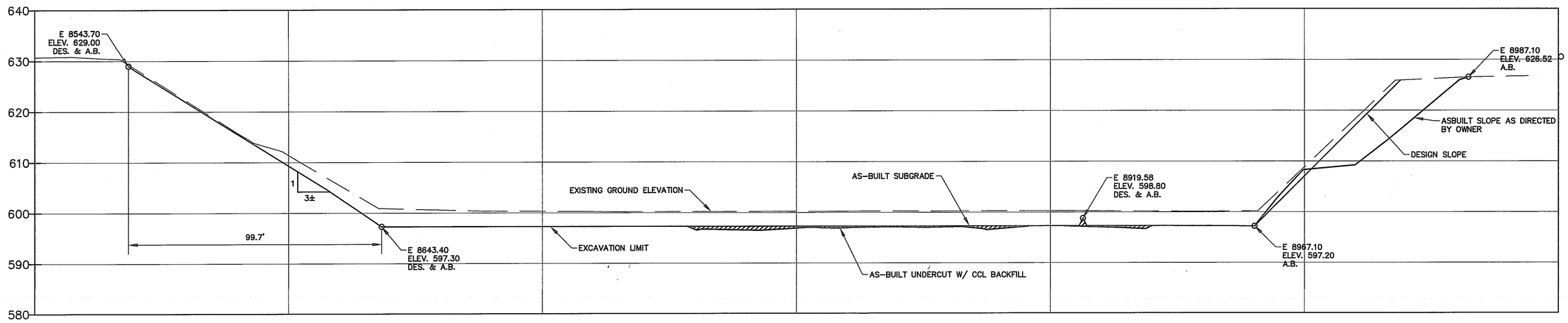

SUBGRADE SECTION D-D LOOKING NORTH @ S 6825' (FROM B2-003-855)

SCALE: HORIZ. 1" = 20', VERT. 1" = 10'

REV. MARK	REVISION	BY	CHK	APP	DATE
A	ADDED SHEETS B2-032 THRU B2-036				

CONSULTANT

URS

URS CORPORATION
MIDLAND, MI
25 BUILDING, DOOR 1

URS PROJECT NUMBER: 41569617

DRAWING ISSUE RECORD

ISSUE NO.	REV	MATERIAL OR JOB SPEC	BID	FAB	CONST	REF
2	0	RECORD DRAWINGS				1/2015
1	A	FOR CONSTRUCTION			3/2014	

DATE ISSUED FOR

DESIGNED	URS CORPORATION	6/2008
DRAWN	URS CORPORATION	6/2008
CHECKED	URS CORPORATION	6/2008
APPROVED	J. ALLEN	6/2008
PROJ. ENGR.	J. ALLEN	6/2008
MFG. REP.	K. DETRICH	6/2008

STATUS | PLANT NO.

P.E. SEAL

DOW THE DOW CHEMICAL COMPANY

MICHIGAN OPERATIONS — MIDLAND, MICHIGAN

PROJECT — 3600 BLDG

SALZBURG LANDFILL
PHASE 1 - CELLS 23 THROUGH 28 PROJECT
SUBGRADE SECTIONS C-C AND D-D

PROJECT NUMBER	SCALE		REV.
119217	AS SHOWN	B2-005-119217	0

PRINTED | VER.

STATE OF MICHIGAN
MICHAEL J. STEPIC
ENGINEER
NO. 60457
LICENSED PROFESSIONAL ENGINEER

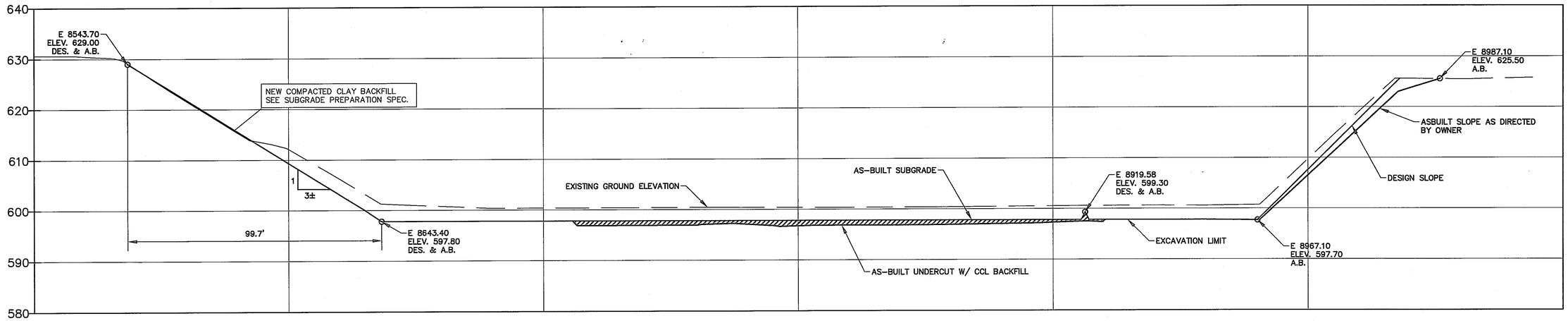

SUBGRADE SECTION E-E LOOKING NORTH @ S 6925' (FROM B2-003-855)

SCALE: HORIZ. 1" = 20', VERT. 1" = 10'

NOTE: SEE SECTION 2 OF THE SPECIFICATIONS FOR SUBGRADE PREPARATION REQUIREMENTS.

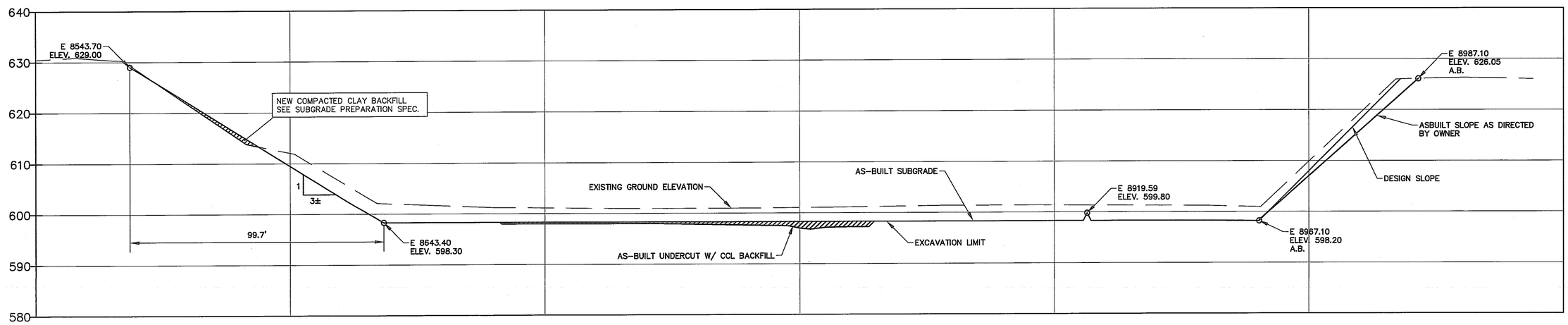

SUBGRADE SECTION F-F LOOKING NORTH @ S 7025' (FROM B2-003-855)

SCALE: HORIZ. 1" = 20', VERT. 1" = 10'

REV. MARK	REVISION	BY	CHK	APP	DATE
A	ADDED SHEETS B2-032 THRU B2-036				

CONSULTANT

URS

URS CORPORATION
MIDLAND, MI
29 BUILDING, DOOR 1

URS PROJECT NUMBER: 41569617

DRAWING ISSUE RECORD

ISSUE NO.	REV	MATERIAL OR JOB SPEC	BID	FAB	CONST	REF
2	0	RECORD DRAWINGS				1/2015
1	A	FOR CONSTRUCTION			3/2014	

DATE ISSUED FOR

DESIGNED	URS CORPORATION	6/2008
DRAWN	URS CORPORATION	6/2008
CHECKED	URS CORPORATION	6/2008
APPROVED	J. ALLEN	6/2008
PROJ. ENGR.	J. ALLEN	6/2008
MFG. REP.	K. DETRICH	6/2008

STATUS | PLANT NO.

P.E. SEAL

DOW THE DOW CHEMICAL COMPANY

MICHIGAN OPERATIONS — MIDLAND, MICHIGAN

PROJECT — 2600 BLDG

SALZBURG LANDFILL
PHASE 1 - CELLS 23 THROUGH 28 PROJECT
SUBGRADE SECTIONS E-E AND F-F

PROJECT NUMBER	SCALE		REV.
119217	AS SHOWN	B2-006-119217	0

PRINTED | VER.

STATE OF MICHIGAN
MICHAEL J. STEPIC
ENGINEER
NO. 60457
LICENSED PROFESSIONAL ENGINEER

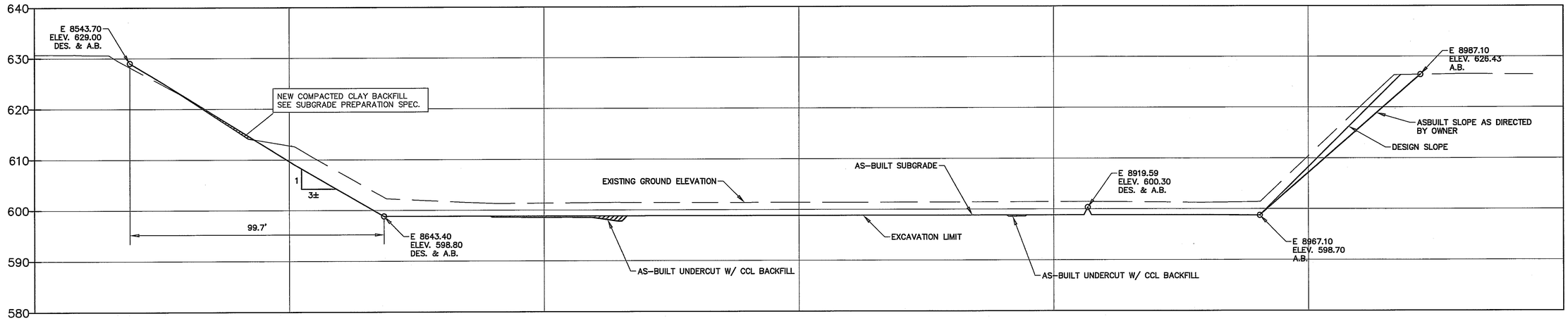

SUBGRADE SECTION G-G LOOKING NORTH @ S 7125' (FROM B2-003-855)

SCALE: HORIZ. 1" = 20', VERT. 1" = 10'

NOTE: SEE SECTION 2 OF THE SPECIFICATIONS FOR SUBGRADE PREPARATION REQUIREMENTS.

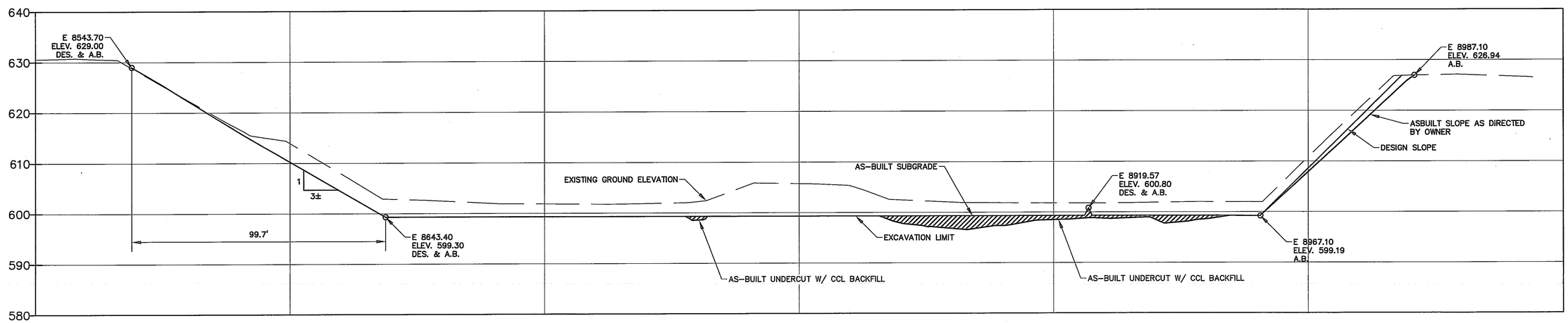

SUBGRADE SECTION H-H LOOKING NORTH @ S 7225' (FROM B2-003-855)

SCALE: HORIZ. 1" = 20', VERT. 1" = 10'

REV. MARK	REVISION	BY	CHK	APP	DATE
A	ADDED SHEETS B2-032 THRU B2-035				

CONSULTANT

URS

URS CORPORATION
MIDLAND, MI
25 BUILDING, DCOR 1

URS PROJECT NUMBER: 41569617

DRAWING ISSUE RECORD

ISSUE NO.	REV	MATERIAL OR JOB SPEC	BID	FAB	CONST	REF
2	0	RECORD DRAWINGS				1/2015
1	A	FOR CONSTRUCTION			3/2014	

DATE ISSUED FOR

DESIGNED	URS CORPORATION	6/2008
DRAWN	URS CORPORATION	6/2008
CHECKED	URS CORPORATION	6/2008
APPROVED	J. ALLEN	6/2008
PROJ. ENGR.	J. ALLEN	6/2008
MFG. REP.	K. DETRICH	6/2008

STATUS | PLANT NO.

P.E. SEAL

DOW THE DOW CHEMICAL COMPANY

MICHIGAN OPERATIONS — MIDLAND, MICHIGAN

PROJECT — 3600 BLDG

SALZBURG LANDFILL
PHASE 1 - CELLS 23 THROUGH 28 PROJECT
SUBGRADE SECTIONS G-G AND H-H

PROJECT NUMBER	SCALE		REV.
119217	AS SHOWN	B2-007-119217	0

PRINTED | VER.

STATE OF MICHIGAN
MICHAEL J. STEPIC
ENGINEER
NO. 60457
LICENSED PROFESSIONAL ENGINEER

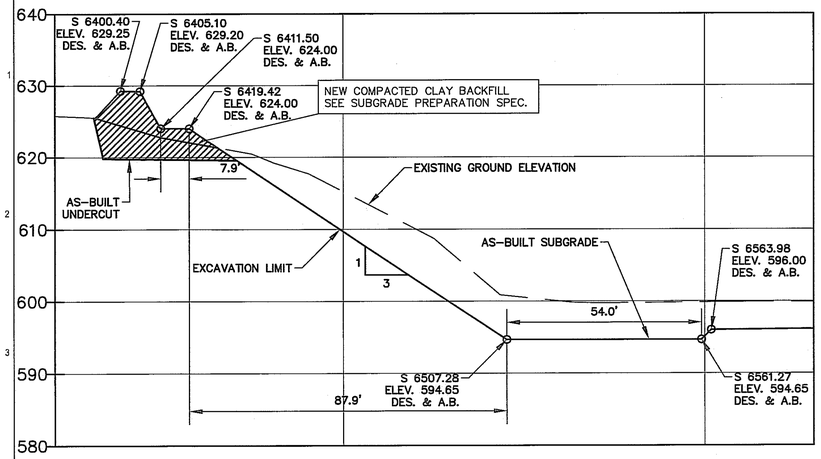

SUBGRADE SECTION I-I LOOKING EAST @ E 8646.1 (FROM B2-003-855)

SCALE: HORIZ. 1" = 20', VERT. 1" = 10'

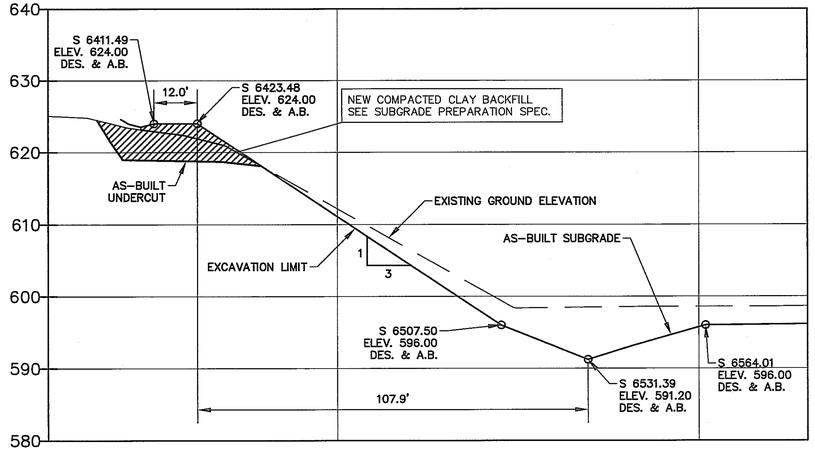

SUBGRADE SECTION K-K LOOKING EAST @ E 8766.1 (FROM B2-003-855)

SCALE: HORIZ. 1" = 20', VERT. 1" = 10'

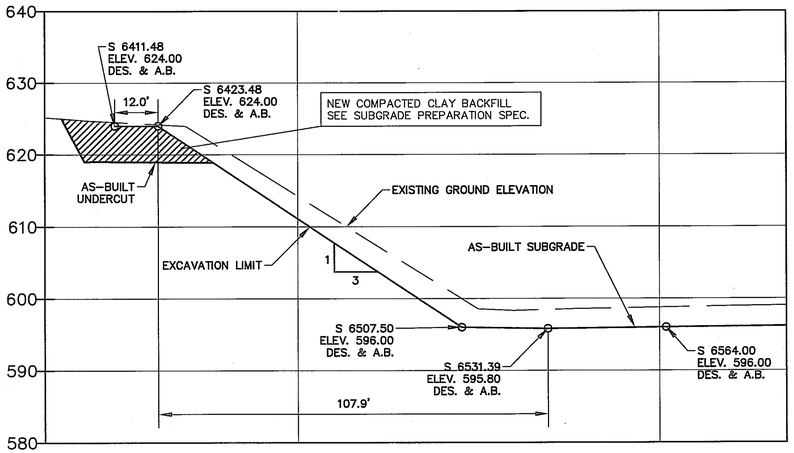

SUBGRADE SECTION M-M LOOKING EAST @ E 8886.1 (FROM B2-003

SCALE: HORIZ. 1" = 20', VERT. 1" = 10'

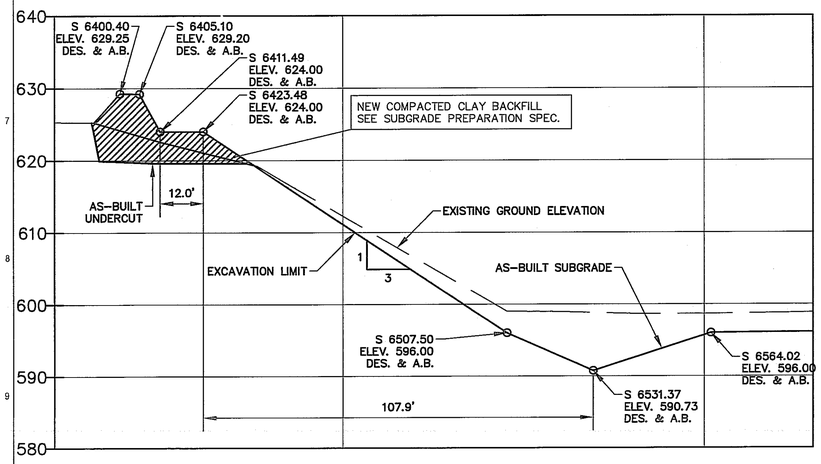

SUBGRADE SECTION J-J LOOKING EAST @ E 8706.1 (FROM B2-003-855)

SCALE: HORIZ. 1" = 20', VERT. 1" = 10'

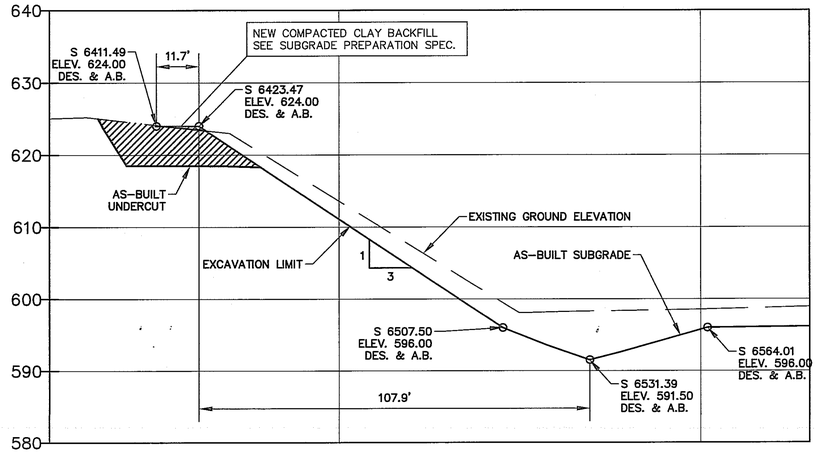

SUBGRADE SECTION L-L LOOKING EAST @ E 8826.1 (FROM B2-003-855)

SCALE: HORIZ. 1" = 20', VERT. 1" = 10'

NOTE: SEE SECTION 2 OF THE SPECIFICATIONS FOR SUBGRADE PREPARATION REQUIREMENTS.

REV. MARK	REVISION	BY	CHK	APP	DATE
A	ADDED SHEETS B2-032 THRU B2-036				

CONSULTANT

URS

URS CORPORATION
MIDLAND, MI
25 BUILDING, DOOR 1

URS PROJECT NUMBER: 41569617

DRAWING ISSUE RECORD

ISSUE NO.	REV	MATERIAL OR JOB SPEC	BID	FAB	CONST	REF
2	0	RECORD DRAWINGS				1/2015
1	A	FOR CONSTRUCTION			3/2014	

DATE ISSUED FOR

DESIGNED	URS CORPORATION	6/2008
DRAWN	URS CORPORATION	6/2008
CHECKED	URS CORPORATION	6/2008
APPROVED	J. ALLEN	6/2008
PROJ. ENGR.	J. ALLEN	6/2008
MFG. REP.	K. DETRICH	6/2008

STATUS | PLANT NO.

P.E. SEAL

DOW THE DOW CHEMICAL COMPANY

MICHIGAN OPERATIONS — MIDLAND, MICHIGAN

PROJECT — 3600 BLDG

SALZBURG LANDFILL
PHASE 1 - CELLS 23 THROUGH 28 PROJECT
NORTH WALL SUBGRADE SECTIONS

PROJECT NUMBER	SCALE		REV.
119217	AS SHOWN	B2-008-119217	0

PRINTED | VER.

STATE OF MICHIGAN
MICHAEL J. STEPIC
ENGINEER
NO. 60457
LICENSED PROFESSIONAL ENGINEER

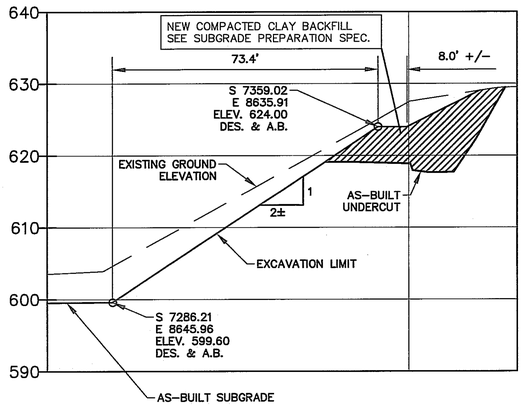

SUBGRADE SECTION N-N LOOKING EAST (FROM B2-003-855)

SCALE: HORIZ. 1" = 20', VERT. 1" = 10'

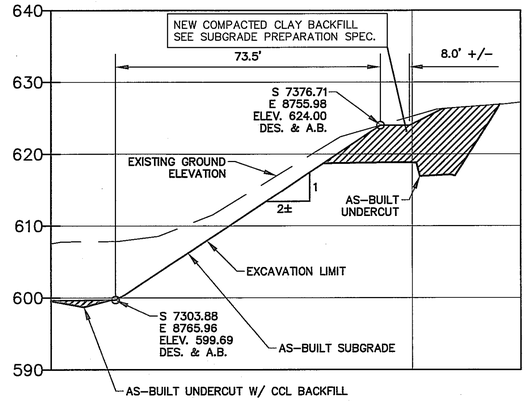

SUBGRADE SECTION P-P LOOKING EAST (FROM B2-003-855)

SCALE: HORIZ. 1" = 20', VERT. 1" = 10'

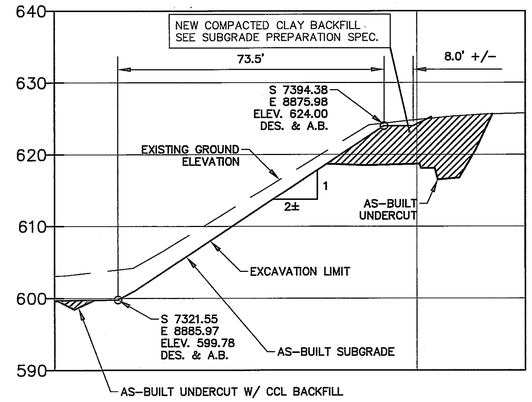

SUBGRADE SECTION R-R LOOKING EAST (FROM B2-003-855)

SCALE: HORIZ. 1" = 20', VERT. 1" = 10'

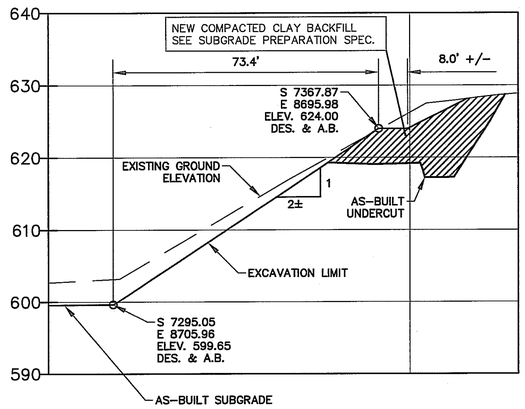

SUBGRADE SECTION O-O LOOKING EAST (FROM B2-003-855)

SCALE: HORIZ. 1" = 20', VERT. 1" = 10'

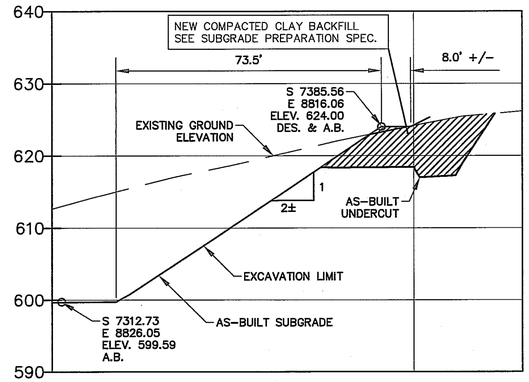

SUBGRADE SECTION Q-Q LOOKING EAST (FROM B2-003-855)

SCALE: HORIZ. 1" = 20', VERT. 1" = 10'

NOTE: SEE SECTION 2 OF THE SPECIFICATIONS FOR SUBGRADE PREPARATION REQUIREMENTS.

REV. MARK	REVISION	BY	CHK	APP	DATE
A	ADDED SHEETS B2-032 THRU B2-035				

CONSULTANT

URS

URS CORPORATION
MIDLAND, MI
25 BUILDING, DCOR 1

URS PROJECT NUMBER: 41569617

DRAWING ISSUE RECORD

ISSUE NO.	REV	MATERIAL OR JOB SPEC	BID	FAB	CONST	REF
2	0	RECORD DRAWINGS				1/2015
1	A	FOR CONSTRUCTION			3/2014	

DATE ISSUED FOR

DESIGNED	URS CORPORATION	6/2008
DRAWN	URS CORPORATION	6/2008
CHECKED	URS CORPORATION	6/2008
APPROVED	J. ALLEN	6/2008
PROJ. ENGR.	J. ALLEN	6/2008
MFG. REP.	K. DETRICH	6/2008

STATUS | PLANT NO.

P.E. SEAL

DOW THE DOW CHEMICAL COMPANY

MICHIGAN OPERATIONS — MIDLAND, MICHIGAN

PROJECT — 3600 BLDG

SALZBURG LANDFILL
PHASE 1 - CELLS 23 THROUGH 28 PROJECT
SOUTH WALL SUBGRADE SECTIONS

PROJECT NUMBER	SCALE		REV.
119217	AS SHOWN	B2-009-119217	0

PRINTED | VER.

STATE OF MICHIGAN
MICHAEL J. STEPIC
ENGINEER
NO. 60457
LICENSED PROFESSIONAL ENGINEER

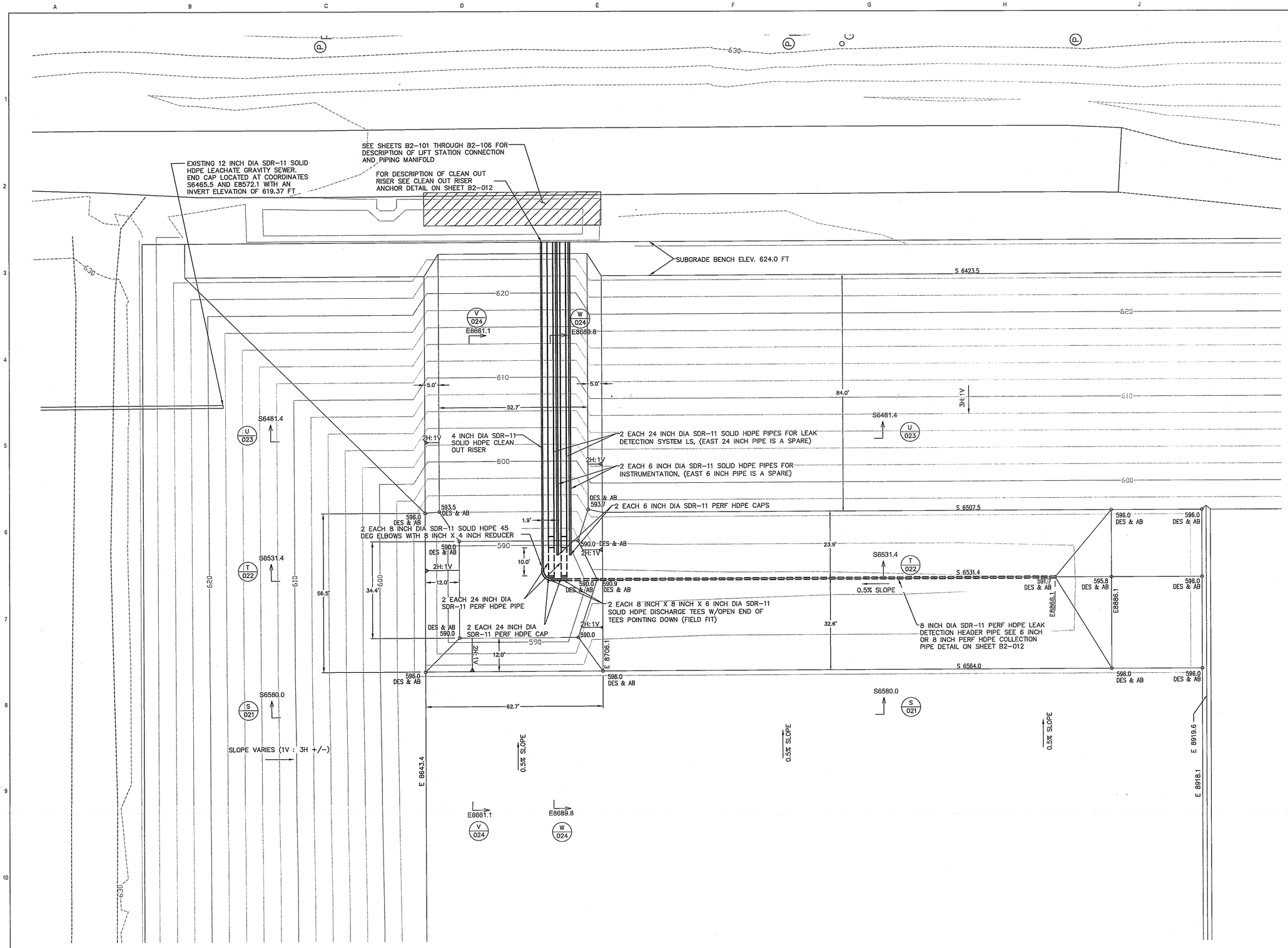

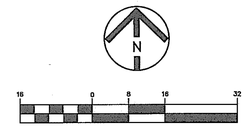

(IN FEET)
1 inch = 16 ft.

GRAPHIC SCALE

LEGEND

SUBGRADE BREAKLINE	
SURVEY COORDINATE	S 6564.0 E 8706.1 596.0
PROPOSED MINOR CONTOUR	619
PROPOSED MAJOR CONTOUR	620
EXISTING MINOR CONTOUR	619
EXISTING MAJOR CONTOUR	620
PERF. LEAK DETECTION PIPE	
SOLID LEAK DETECTION PIPE	

REV. MARK	REVISION	BY	CHK	APP	DATE
A	ADDED SHEETS B2-032 THRU B2-036				

CONSULTANT

URS

URS CORPORATION
MIDLAND, MI
25 BUILDING, DOOR 1

URS PROJECT NUMBER: 41569617

DRAWING ISSUE RECORD

ISSUE NO.	REV	MATERIAL OR JOB SPEC	BID	FAB	CONST	REF
2	0	RECORD DRAWINGS				1/2015
1	A	FOR CONSTRUCTION			3/2014	

DATE ISSUED FOR

DESIGNED	URS CORPORATION	6/2008
DRAWN	URS CORPORATION	6/2008
CHECKED	URS CORPORATION	6/2008
APPROVED	J. ALLEN	6/2008
PROJ. ENGR.	J. ALLEN	6/2008
MFG. REP.	K. DETRICH	6/2008

STATUS | PLANT NO.

P.E. SEAL

DOW THE DOW CHEMICAL COMPANY

MICHIGAN OPERATIONS — MIDLAND, MICHIGAN

PROJECT — 3600 BLDG

SALZBURG LANDFILL
PHASE 1 - CELLS 23 THROUGH 28 PROJECT
LEAK DETECTION SYSTEM SUMP AND PIPING PLAN

PROJECT NUMBER	SCALE		REV.
119217	AS SHOWN	B2-010-119217	0

PRINTED | VER.

STATE OF MICHIGAN
MICHAEL J. STEPIC
ENGINEER
NO. 60457
LICENSED PROFESSIONAL ENGINEER

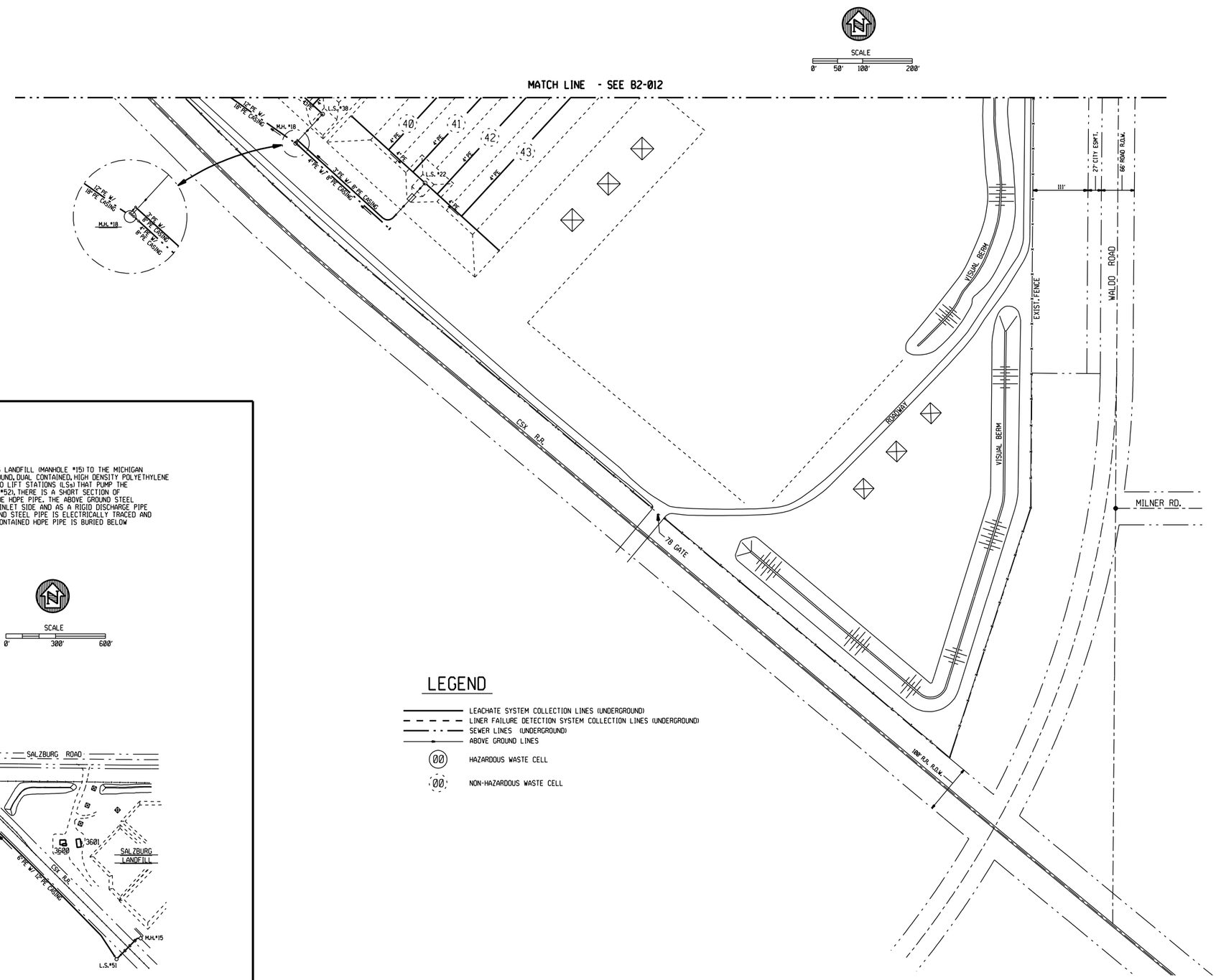

THE PIPELINE FROM THE DISCHARGE POINT AT SALZBURG LANDFILL (MANHOLE #15) TO THE MICHIGAN OPERATIONS PLANT SEWER (MANHOLE #8) IS AN UNDERGROUND, DUAL CONTAINED, HIGH DENSITY POLYETHYLENE (HDPE) LINE FOR ITS ENTIRE LENGTH EXCEPT AT THE TWO LIFT STATIONS (LSs) THAT PUMP THE LEACHATE BACK TO THE WWTP. AT EACH LS (LS#51 & LS#52), THERE IS A SHORT SECTION OF ABOVE GROUND STEEL PIPING THAT IS CONNECTED TO THE HDPE PIPE. THE ABOVE GROUND STEEL PIPING AT THE LSs ACTS AS A SIPHON BREAK ON THE INLET SIDE AND AS A RIGID DISCHARGE PIPE FROM THE PUMP ON THE OUTLET SIDE. THE ABOVE GROUND STEEL PIPE IS ELECTRICALLY TRACED AND INSULATED TO PROTECT AGAINST FREEZING. THE DUAL CONTAINED HDPE PIPE IS BURIED BELOW FROST LEVEL.

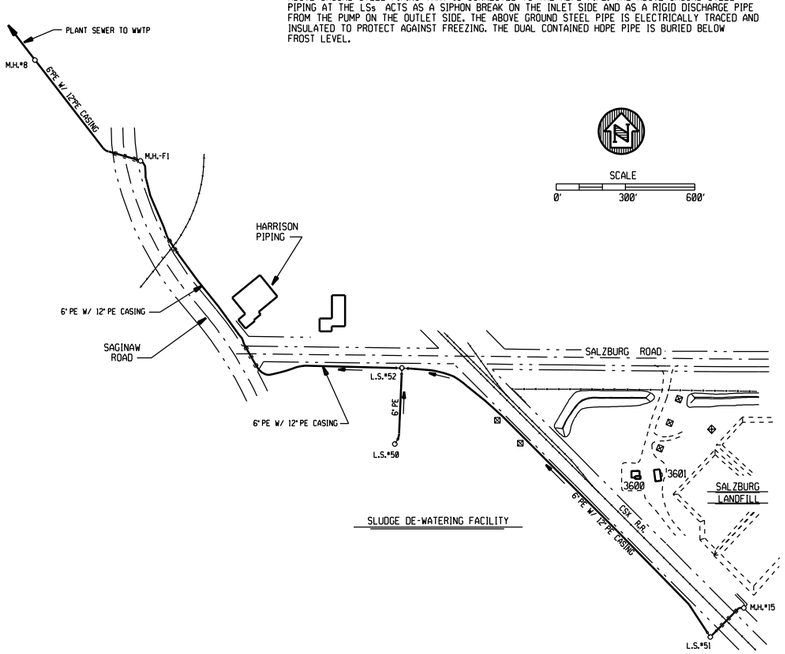

LEGEND

- LEACHATE SYSTEM COLLECTION LINES (UNDERGROUND)
- LINER FAILURE DETECTION SYSTEM COLLECTION LINES (UNDERGROUND)
- SEWER LINES (UNDERGROUND)
- ABOVE GROUND LINES
- 00 HAZARDOUS WASTE CELL
- 00 NON-HAZARDOUS WASTE CELL

REV. MARK	REVISION	BY	CHK	APP	DATE
A	ADDED NOTE REGARDING PIPELINE FROM SLF TO WWTP	LEG	JJA	JJA	10/08

REV. MARK	REVISION	BY	CHK	APP	DATE

DRAWING ISSUE RECORD

ISSUE NO.	REV	MATERIAL OR JOB SPEC	BID	FAB	CONST	REF
			DATE ISSUED FOR			

DESIGNED	J.J. ALLEN	11/05
DRAWN	L.E. GIRARDIN	11/05
CHECKED	J.J.A.	11/05
APPROVED	J.J.A.	11/05
PROJ. ENGR.	J.J. ALLEN	11/05
MFG. REP.	STEVE LUCAS	11/05

STATUS | PLANT NO.
P.E. SEAL

THE DOW CHEMICAL COMPANY
MICHIGAN DIVISION — MIDLAND, MICHIGAN
SALZBURG LANDFILL — 3600 BLDG

FIGURE 11.P-6
SITE SEWERS & SAMPLING POINTS MAP
(SHEET 2 OF 2)

EJN NUMBER	SCALE		REV.
114291	1" = 100'-0"	B2-105-1374	A

2 PLN

PRINTED | VER.

$PERSON $DATE $TIME $FILENAME $INSTRUCTIONS

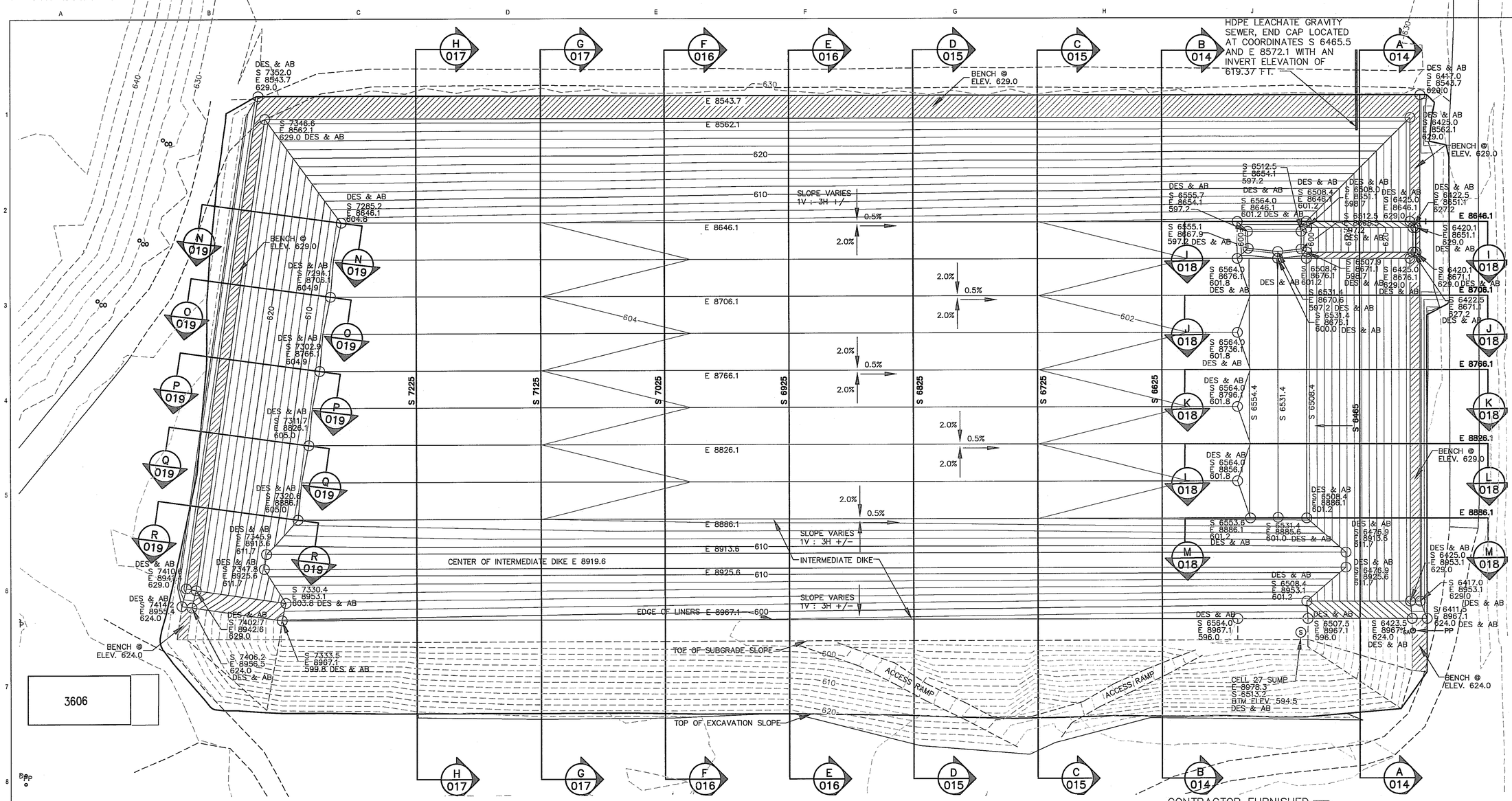

(IN FEET)
1 inch = 40 ft.
GRAPHIC SCALE

LEGEND

- CROSS-SECTION NAME / SHEET CROSS SECTION SHOWN ON (A 014)
- CCL BREAKLINE
- SUBGRADE BREAKLINE
- SURVEY COORDINATE
- PROPOSED MINOR CONTOUR (619)
- PROPOSED MAJOR CONTOUR (620)
- EXISTING MINOR CONTOUR (619)
- EXISTING MAJOR CONTOUR (620)

NOTE:

SEE SHEET B2-013 FOR ADDITIONAL CLAY ELEVATIONS IN TROUGH AREA.

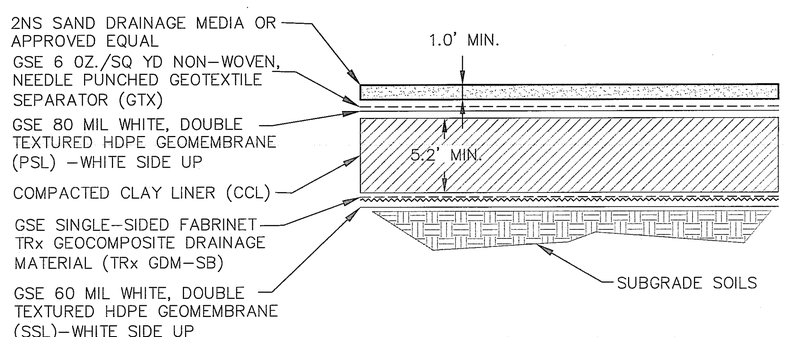

TYPICAL CELL FLOOR CROSS-SECTION

NOT TO SCALE

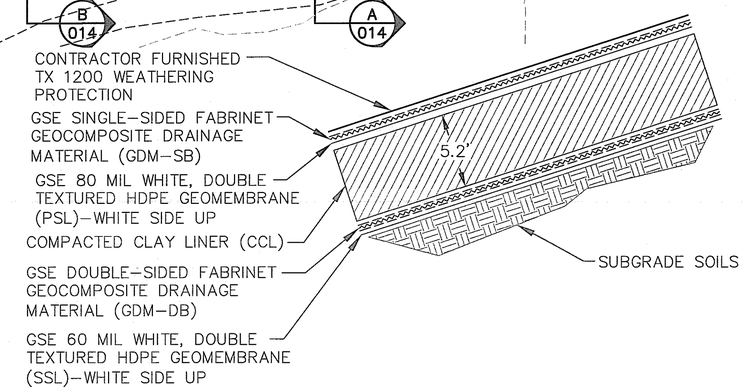

TYPICAL CELL WALL CROSS SECTION

NOT TO SCALE

REV. MARK	REVISION	BY	CHK	APP	DATE
A	ADDED SHEETS B2-032 THRU B2-035				

CONSULTANT: URS — URS CORPORATION, MIDLAND, MI, 25 BUILDING, DOOR 1

URS PROJECT NUMBER: 41569617

DRAWING ISSUE RECORD

ISSUE NO.	REV	MATERIAL OR JOB SPEC	BID	FAB	CONST	REF
2	0	RECORD DRAWINGS				1/2015
1	A	FOR CONSTRUCTION			3/2014	

DATE ISSUED FOR

DESIGNED	URS CORPORATION	6/2008
DRAWN	URS CORPORATION	6/2008
CHECKED	URS CORPORATION	6/2008
APPROVED	J. ALLEN	6/2008
PROJ. ENGR.	J. ALLEN	6/2008
MFG. REP.	K. DETRICH	6/2008

STATUS | PLANT NO. | P.E. SEAL

THE DOW CHEMICAL COMPANY
MICHIGAN OPERATIONS — MIDLAND, MICHIGAN
PROJECT: SALZBURG LANDFILL — 3603 BLDG
PHASE 1 - CELLS 23 THROUGH 28 PROJECT
FINISHED CLAY PLAN

PROJECT NUMBER	SCALE		REV.
119217	AS SHOWN	B2-011-119217	0

PRINTED | VER.

STATE OF MICHIGAN — MICHAEL J. STEPIC — ENGINEER NO. 60457 — LICENSED PROFESSIONAL ENGINEER

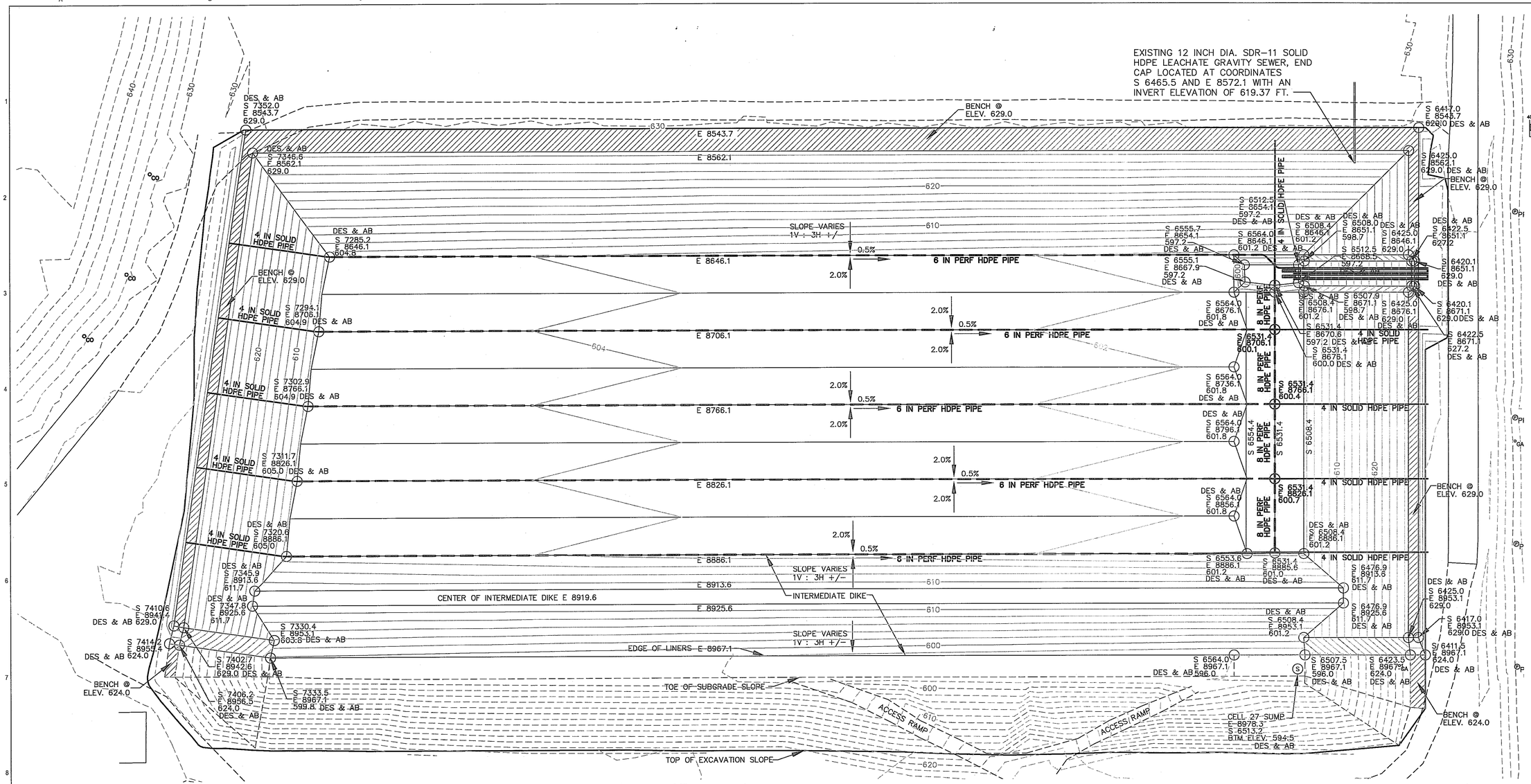

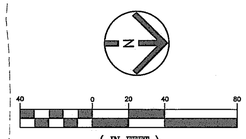

GRAPHIC SCALE

LEGEND

- SUBGRADE BREAKLINE
- SURVEY COORDINATE S 8564.0 E 8706.1 596.0
- PROPOSED MINOR CONTOUR 619
- PROPOSED MAJOR CONTOUR 620
- EXISTING MINOR CONTOUR 619
- EXISTING MAJOR CONTOUR 620

NOTE:

SEE SHEET B2-013 FOR ADDITIONAL LEACHATE PIPING INFORMATION IN THE TROUGH AREA

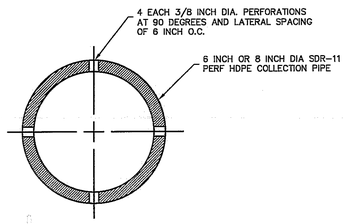

6 INCH OR 8 INCH PERF. HDPE COLLECTION PIPES

NOT TO SCALE

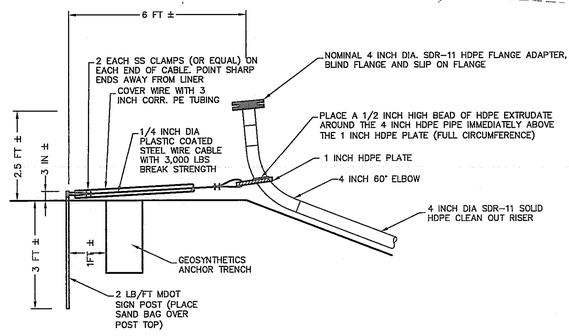

CLEAN OUT RISER ANCHOR (TYPICAL 11 PLACES)

NOT TO SCALE

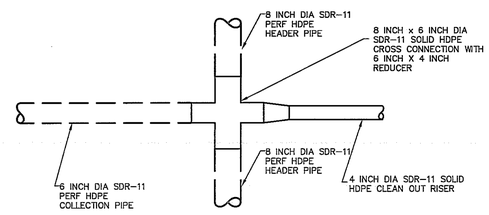

CROSS CONNECTION (TYPICAL 3 PLACES)

NOT TO SCALE

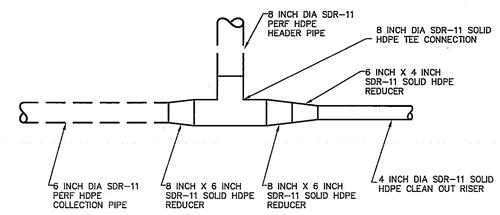

TEE CONNECTION AT INTERMEDIATE DIKE (TYPICAL 1 PLACE)

NOT TO SCALE

REV. MARK	REVISION	BY	CHK.	APP	DATE
A	ADDED SHEETS B2-032 THRU B2-036				

CONSULTANT

URS

URS CORPORATION
MIDLAND, MI
25 BUILDING, DOOR 1

URS PROJECT NUMBER: 41589617

DRAWING ISSUE RECORD

ISSUE NO.	REV	MATERIAL OR JOB SPEC	BID	FAB	CONST	REF
2	0	RECORD DRAWINGS				1/2015
1	A	FOR CONSTRUCTION			3/2014	

DATE ISSUED FOR

DESIGNED	URS CORPORATION	6/2008
DRAWN	URS CORPORATION	6/2008
CHECKED	URS CORPORATION	6/2008
APPROVED	J. ALLEN	6/2008
PROJ. ENGR.	J. ALLEN	6/2008
MFG. REP.	K. DETRICH	6/2008

STATUS | PLANT NO.

P.E. SEAL

THE DOW CHEMICAL COMPANY

MICHIGAN OPERATIONS — MIDLAND, MICHIGAN

PROJECT — 3600 BLDG

SALZBURG LANDFILL
PHASE 1 - CELLS 23 THROUGH 28 PROJECT
LEACHATE COLLECTION SYSTEM PIPING PLAN

PROJECT NUMBER	SCALE		REV.
119217	AS SHOWN	B2-012-119217	0

PRINTED | VER.

STATE OF MICHIGAN
MICHAEL J. STEPIC
ENGINEER NO. 60457
LICENSED PROFESSIONAL ENGINEER

EXISTING 12 INCH DIA SDR-11 SOLID HDPE LEACHATE GRAVITY SEWER. END CAP LOCATED AT COORDINATES S6465.5 AND E8572.1 WITH AN INVERT ELEVATION OF 619.37 FT.

GRAVITY SEWER BOOT LOCATION SEE SHEET B2-029.

S 7349.1
E 8559.6
629.0
DES & AB

DES & AB
S 6422.5
E 8558.6
629.0

84.0'

DES & AB
S 6564.0
E 8646.1
601.2

S 6508.4
E 8646.1
601.2 DES & AB

DES & AB
S 6422.5
E 8643.3
629.0

S 7285.2
E 8646.1
604.81
DES & AB

S 6417.6
E 8650.3
629.0 DES & AB

S 6417.6
E 8671.9
629.0 DES & AB

S 6508.4
E 8676.1
601.2
DES & AB

S 6422.5
E 8677.5
629.0
DES & AB

240.0'

83.4'

S 7320.6
E 8886.1
604.98
DES & AB

S 6508.4
E 8886.1
601.2
DES & AB

27.5'

S 6422.5
E 8918.6
629.0
DES & AB

S 7346.7
E 8918.6
611.7 DES & AB

TOE OF SUBGRADE SLOPE

ACCESS RAMP

ACCESS RAMP

TOP OF EXCAVATION SLOPE

3606

T-1563

N

40 0 20 40 80

(IN FEET)
1 inch = 40 ft.

GRAPHIC SCALE

LEGEND

PSL AND GTX

PSL AND GDM-SB

SUBGRADE BREAKLINE

SURVEY COORDINATE S 6564.0 E 8706.1 596.0

PROPOSED MINOR CONTOUR 619

PROPOSED MAJOR CONTOUR 620

EXISTING MINOR CONTOUR 619

EXISTING MAJOR CONTOUR 620

REV. MARK	REVISION	BY	CHK	APP	DATE
A	ADDED SHEETS B2-032 THRU B2-036				

CONSULTANT

URS

URS CORPORATION
MIDLAND, MI
25 BUILDING, DOOR 1

URS PROJECT NUMBER: 41569617

DRAWING ISSUE RECORD

ISSUE NO.	REV	MATERIAL OR JOB SPEC	BID	FAB	CONST	REF
2	0	RECORD DRAWINGS				1/2015
1	A	FOR CONSTRUCTION			3/2014	

DATE ISSUED FOR

DESIGNED	URS CORPORATION	6/2008
DRAWN	URS CORPORATION	6/2008
CHECKED	URS CORPORATION	6/2008
APPROVED	J. ALLEN	6/2008
PROJ. ENGR.	J. ALLEN	6/2008
MFG. REP.	K. DETRICH	6/2008

STATUS | PLANT NO.

P.E. SEAL

DOW THE DOW CHEMICAL COMPANY

MICHIGAN OPERATIONS — MIDLAND, MICHIGAN

PROJECT — 3609 BLDG

SALZBURG LANDFILL
PHASE 1 - CELLS 23 THROUGH 28 PROJECT
PSL, GDM AND GTX PLAN

PROJECT NUMBER	SCALE		REV.
119217	AS SHOWN	B2-012A-119217	0

PRINTED | VER.

STATE OF MICHIGAN
MICHAEL J. STEPIC
ENGINEER
NO. 60457
LICENSED PROFESSIONAL ENGINEER

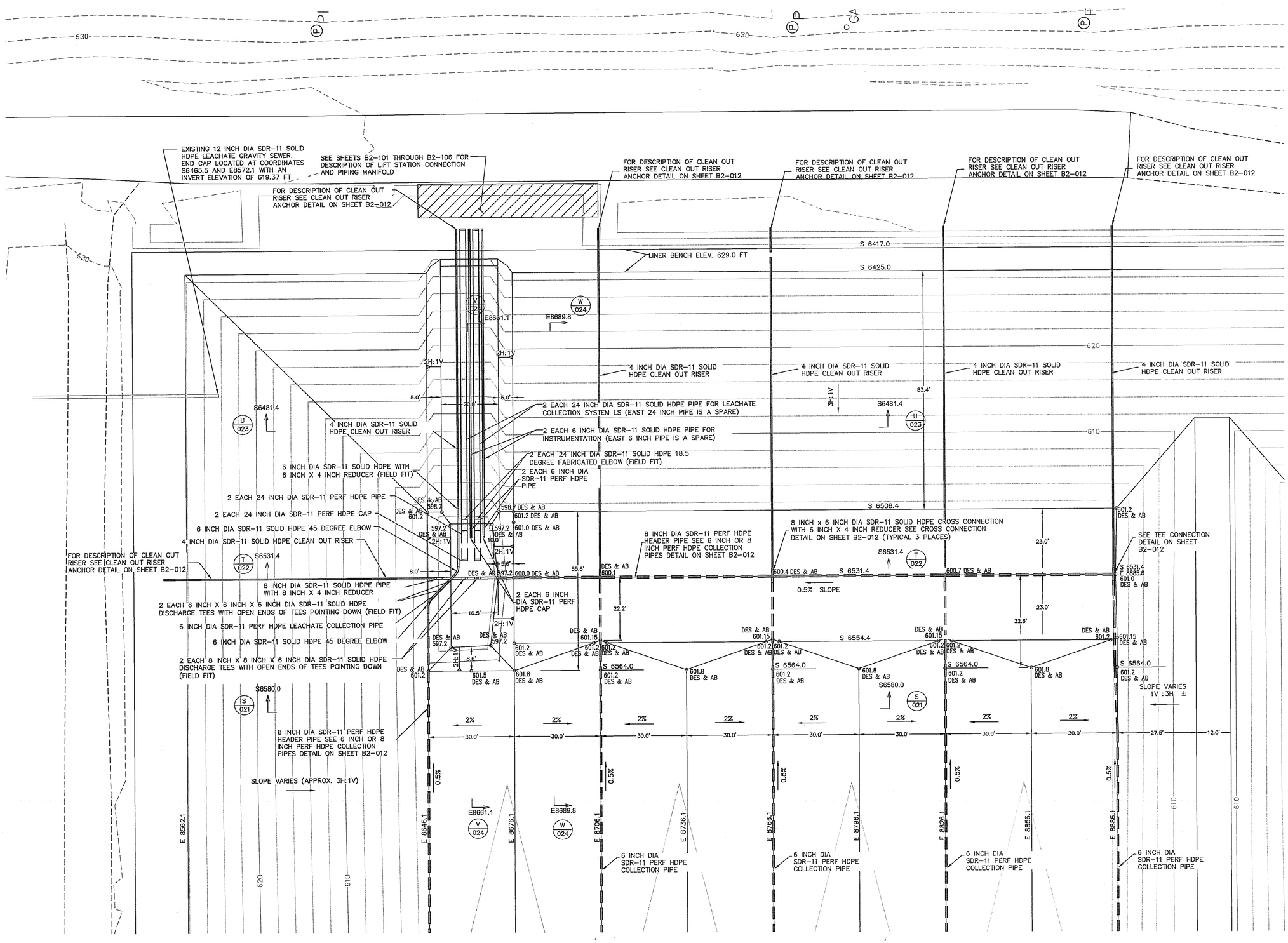

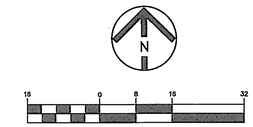

GRAPHIC SCALE

LEGEND

CCL BREAKLINE	
SURVEY COORDINATE	S 6564.0 E 8706.1 596.0
PERF. LEACHATE COLLECTION PIPE	
SOLID LEACHATE COLLECTION PIPE	
PROPOSED MINOR CONTOUR	619
PROPOSED MAJOR CONTOUR	620
EXISTING MINOR CONTOUR	619
EXISTING MAJOR CONTOUR	620

REV. MARK	REVISION	BY	CHK	APP	DATE
A	ADDED SHEETS B2-032 THRU B2-036				

CONSULTANT

URS

URS CORPORATION
MIDLAND, MI
23 BUILDING, DOOR 1

URS PROJECT NUMBER: 41569617

DRAWING ISSUE RECORD

ISSUE NO.	REV	MATERIAL OR JOB SPEC	BID	FAB	CONST	REF
2	0	RECORD DRAWINGS				1/2015
1	A	FOR CONSTRUCTION			3/2014	

DATE ISSUED FOR

DESIGNED	URS CORPORATION	6/2008
DRAWN	URS CORPORATION	6/2008
CHECKED	URS CORPORATION	6/2008
APPROVED	J. ALLEN	6/2008
PROJ. ENGR.	J. ALLEN	6/2008
MFG. REP.	K. DETRICH	6/2008

STATUS | PLANT NO.

P.E. SEAL

DOW THE DOW CHEMICAL COMPANY
MICHIGAN OPERATIONS MIDLAND, MICHIGAN
PROJECT 3600 BLDG

SALZBURG LANDFILL
PHASE 1 - CELLS 23 THROUGH 28 PROJECT
LEACHATE COLLECTION SYSTEM SUMP AND PIPING PLAN

PROJECT NUMBER	SCALE		REV.
119217	AS SHOWN	B2-013-119217	0

PRINTED | VER.

STATE OF MICHIGAN
MICHAEL J. STEPIC
ENGINEER
NO. 60457
LICENSED PROFESSIONAL ENGINEER

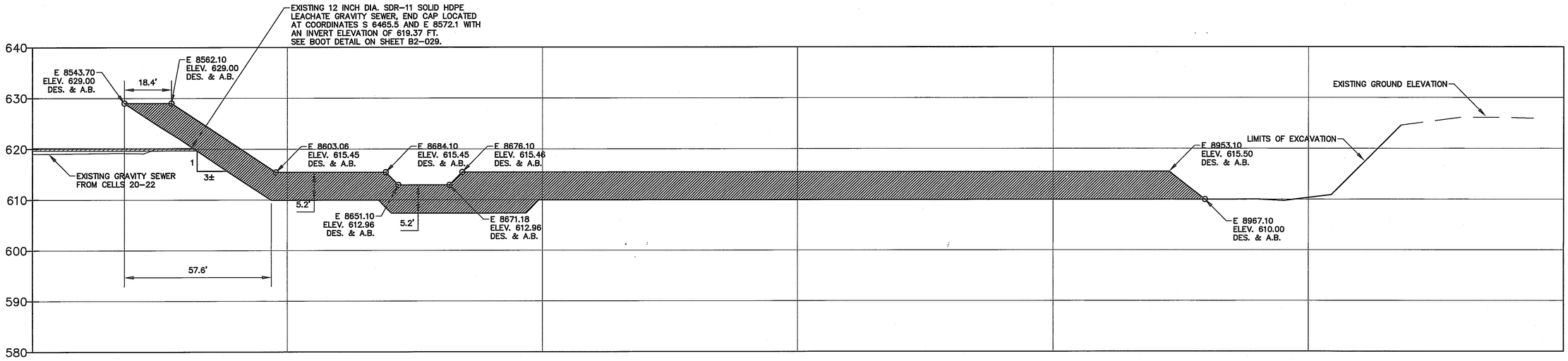

CROSS SECTION A-A LOOKING NORTH @ S 6465 (FROM B2-011-855)

SCALE: HORIZ. 1" = 20', VERT. 1" = 10'

NOTE: THIS SECTION IS THROUGH THE NORTH WALL THE DIMENSIONS GIVEN ARE PERPENDICULAR TO THE SLOPE OF THE WEST WALL.

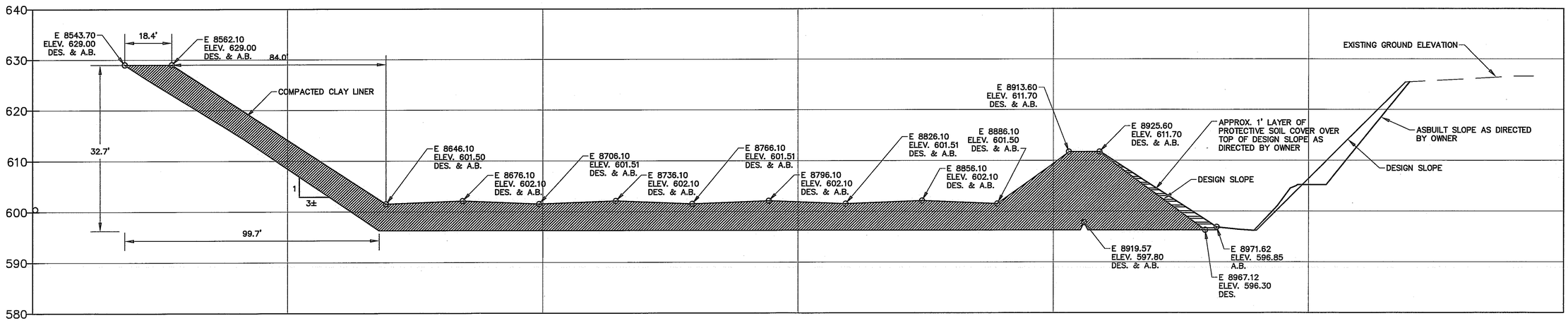

CROSS SECTION B-B LOOKING NORTH @ S 6625 (FROM B2-011-855)

SCALE: HORIZ. 1" = 20', VERT. 1" = 10'

REV. MARK	REVISION	BY	CHK	APP	DATE
A	ADDED SHEETS B2-032 THRU B2-035				

CONSULTANT

URS

URS CORPORATION
MIDLAND, MI
25 BUILDING, DOOR 1

URS PROJECT NUMBER: 41569617

DRAWING ISSUE RECORD

ISSUE NO.	REV	MATERIAL OR JOB SPEC	BID	FAB	CONST	REF
2	0	RECORD DRAWINGS				1/2015
1	A	FOR CONSTRUCTION			3/2014	

DATE ISSUED FOR

DESIGNED	URS CORPORATION	6/2008
DRAWN	URS CORPORATION	6/2008
CHECKED	URS CORPORATION	6/2008
APPROVED	J. ALLEN	6/2008
PROJ. ENGR.	J. ALLEN	6/2008
MFG. REP.	K. DETRICH	6/2008

STATUS | PLANT NO.

P.E. SEAL

DOW THE DOW CHEMICAL COMPANY

MICHIGAN OPERATIONS — MIDLAND, MICHIGAN

PROJECT — 3500 BLDG

SALZBURG LANDFILL
PHASE 1 - CELLS 23 THROUGH 28 PROJECT
FINISHED CLAY SECTIONS A-A AND B-B

PROJECT NUMBER	SCALE		REV.
119217	AS SHOWN	B2-014-119217	0

PRINTED | VER.

STATE OF MICHIGAN
MICHAEL J. STEPIC
ENGINEER
NO. 60457
LICENSED PROFESSIONAL ENGINEER

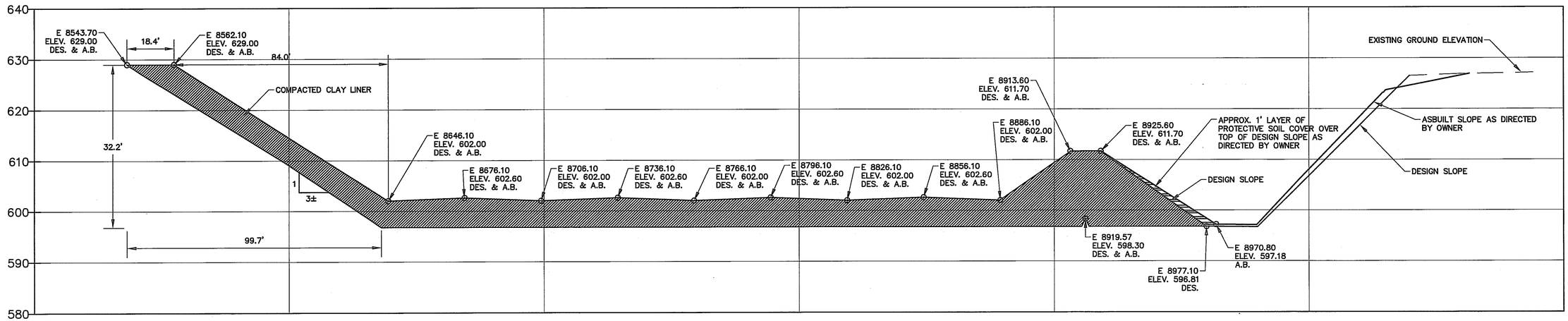

CROSS SECTION C–C LOOKING NORTH @ S 6725' (FROM B2–011–855)

SCALE: HORIZ. 1" = 20', VERT. 1" = 10'

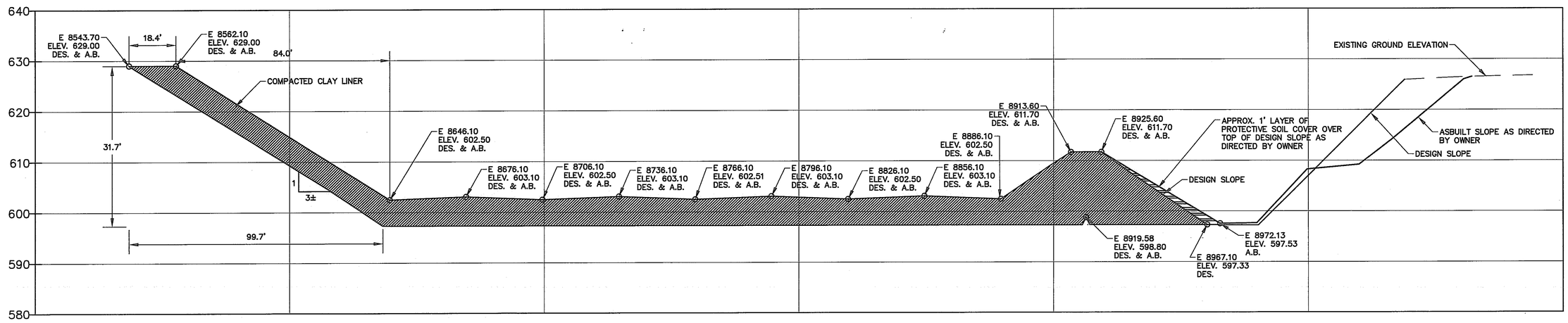

CROSS SECTION D–D LOOKING NORTH @ S 6825' (FROM B2–011–855)

SCALE: HORIZ. 1" = 20', VERT. 1" = 10'

REV. MARK	REVISION	BY	CHK	APP	DATE
A	ADDED SHEETS B2-032 THRU B2-035				

CONSULTANT

URS

URS CORPORATION
MIDLAND, MI
25 BUILDING, DOOR 1

URS PROJECT NUMBER: 41569617

DRAWING ISSUE RECORD

ISSUE NO.	REV	MATERIAL OR JOB SPEC	BID	FAB	CONST	REF
2	0	RECORD DRAWINGS				1/2015
1	A	FOR CONSTRUCTION			3/2014	

DATE ISSUED FOR

DESIGNED	URS CORPORATION	6/2008
DRAWN	URS CORPORATION	6/2008
CHECKED	URS CORPORATION	6/2008
APPROVED	J. ALLEN	6/2008
PROJ. ENGR.	J. ALLEN	6/2008
MFG. REP.	K. DETRICH	6/2008

STATUS | PLANT NO.

P.E. SEAL

DOW THE DOW CHEMICAL COMPANY

MICHIGAN OPERATIONS — MIDLAND, MICHIGAN

PROJECT — 3600 BLDG

SALZBURG LANDFILL
PHASE 1 - CELLS 23 THROUGH 28 PROJECT
FINISHED CLAY SECTIONS C-C AND D-D

PROJECT NUMBER	SCALE		REV.
119217	AS SHOWN	B2-015-119217	0

PRINTED | VER.

STATE OF MICHIGAN
MICHAEL J. STEPIC
ENGINEER
NO. 60457
LICENSED PROFESSIONAL ENGINEER
1/29/2015

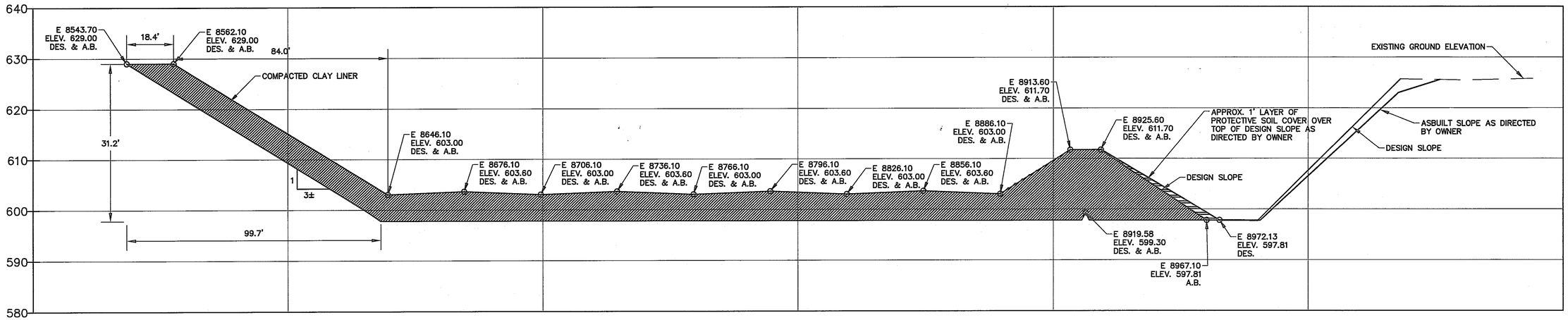

CROSS SECTION E–E LOOKING NORTH @ S 6925' (FROM B2–011–855)

SCALE: HORIZ. 1" = 20', VERT. 1" = 10'

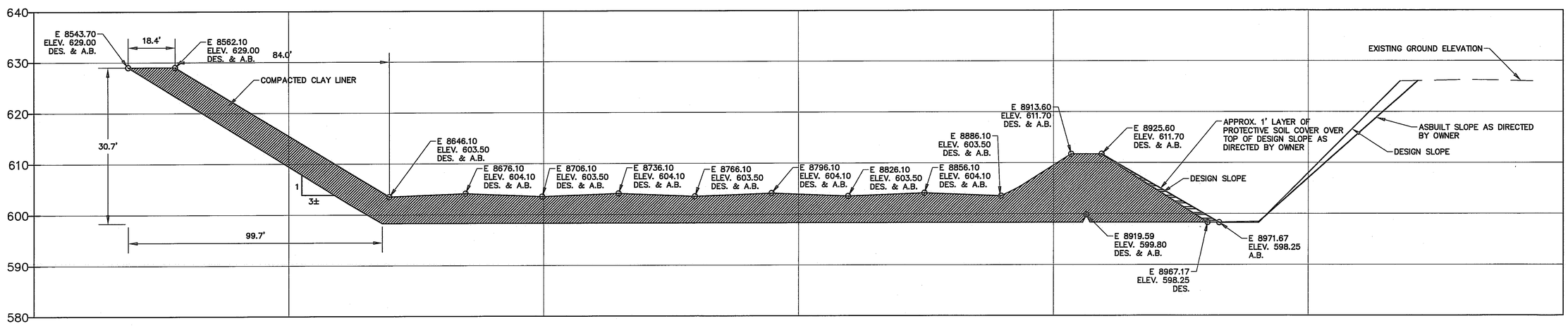

CROSS SECTION F–F LOOKING NORTH @ S 7025' (FROM B2–011–855)

SCALE: HORIZ. 1" = 20', VERT. 1" = 10'

REV. MARK	REVISION	BY	CHK	APP	DATE
A	ADDED SHEETS B2-032 THRU B2-036				

CONSULTANT

URS

URS CORPORATION
MIDLAND, MI
25 BUILDING, DOOR 1

URS PROJECT NUMBER: 41569617

DRAWING ISSUE RECORD

ISSUE NO.	REV	MATERIAL OR JOB SPEC	BID	FAB	CONST	REF.
2	0	RECORD DRAWINGS				1/2015
1	A	FOR CONSTRUCTION			3/2014	

DATE ISSUED FOR

DESIGNED	URS CORPORATION	6/2008
DRAWN	URS CORPORATION	6/2008
CHECKED	URS CORPORATION	6/2008
APPROVED	J. ALLEN	6/2008
PROJ. ENGR.	J. ALLEN	6/2008
MFG. REP.	K. DETRICH	6/2008

STATUS | PLANT NO.

P.E. SEAL

DOW THE DOW CHEMICAL COMPANY

MICHIGAN OPERATIONS — MIDLAND, MICHIGAN

PROJECT — 3600 BLDG

SALZBURG LANDFILL
PHASE 1 - CELLS 23 THROUGH 28 PROJECT
FINISHED CLAY SECTIONS E-E AND F-F

PROJECT NUMBER	SCALE		REV.
119217	AS SHOWN	B2-016-119217	0

PRINTED | VER.

STATE OF MICHIGAN
MICHAEL J. STEPIC
ENGINEER
NO. 60457
LICENSED PROFESSIONAL ENGINEER

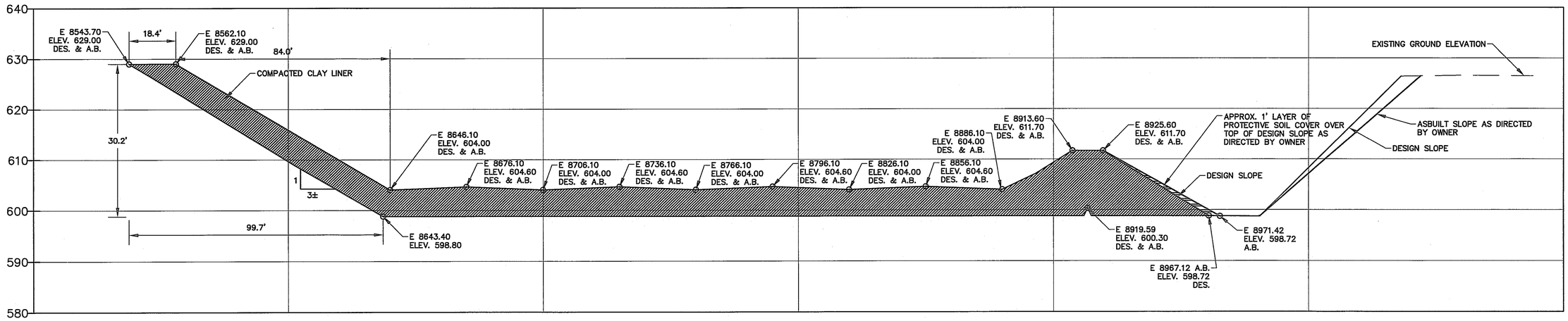

CROSS SECTION G–G LOOKING NORTH @ S 7125' (FROM B2–011–855)

SCALE: HORIZ. 1" = 20', VERT. 1" = 10'

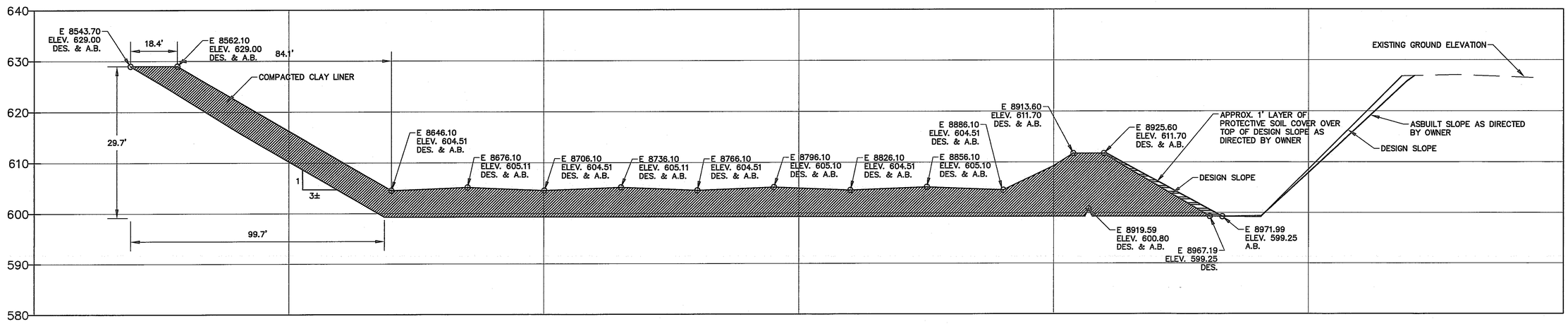

CROSS SECTION H–H LOOKING NORTH @ S 7225' (FROM B2–011–855)

SCALE: HORIZ. 1" = 20', VERT. 1" = 10'

REV. MARK	REVISION	BY	CHK	APP	DATE
A	ADDED SHEETS B2-032 THRU B2-035				

CONSULTANT

URS

URS CORPORATION
MIDLAND, MI
25 BUILDING, DCOR 1

URS PROJECT NUMBER: 41569617

DRAWING ISSUE RECORD

ISSUE NO.	REV	MATERIAL OR JOB SPEC	BID	FAB	CONST	REF
2	0	RECORD DRAWINGS				1/2015
1	A	FOR CONSTRUCTION			3/2014	

DATE ISSUED FOR

DESIGNED	URS CORPORATION	6/2008
DRAWN	URS CORPORATION	6/2008
CHECKED	URS CORPORATION	6/2008
APPROVED	J. ALLEN	6/2008
PROJ. ENGR.	J. ALLEN	6/2008
MFG. REP.	K. DETRICH	6/2008

STATUS | PLANT NO.

P.E. SEAL

DOW THE DOW CHEMICAL COMPANY

MICHIGAN OPERATIONS — MIDLAND, MICHIGAN

PROJECT — 3600 BLDG

SALZBURG LANDFILL
PHASE 1 - CELLS 23 THROUGH 28 PROJECT
FINISHED CLAY SECTIONS G-G AND H-H

PROJECT NUMBER	SCALE		REV.
119217	AS SHOWN	B2-017-119217	0

PRINTED — VER.

STATE OF MICHIGAN
MICHAEL J. STEPIC
ENGINEER
NO. 60457
LICENSED PROFESSIONAL ENGINEER

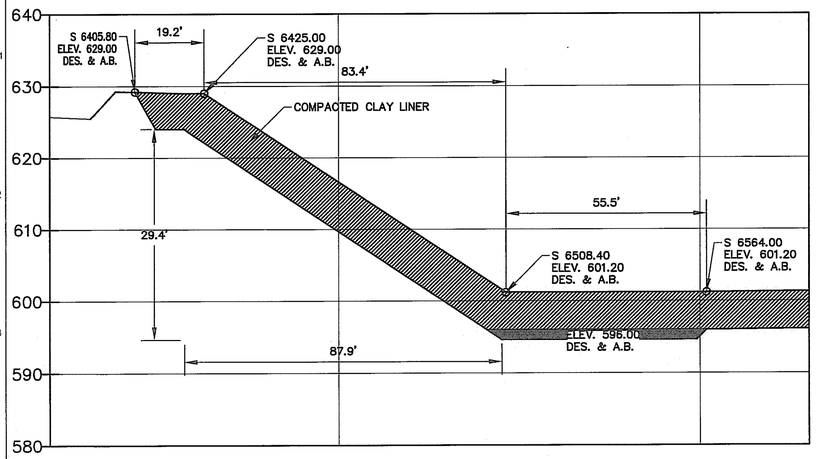

CROSS SECTION I–I LOOKING EAST @ E 8646.1 (FROM B2–011–855)

SCALE: HORIZ. 1" = 20', VERT. 1" = 10'

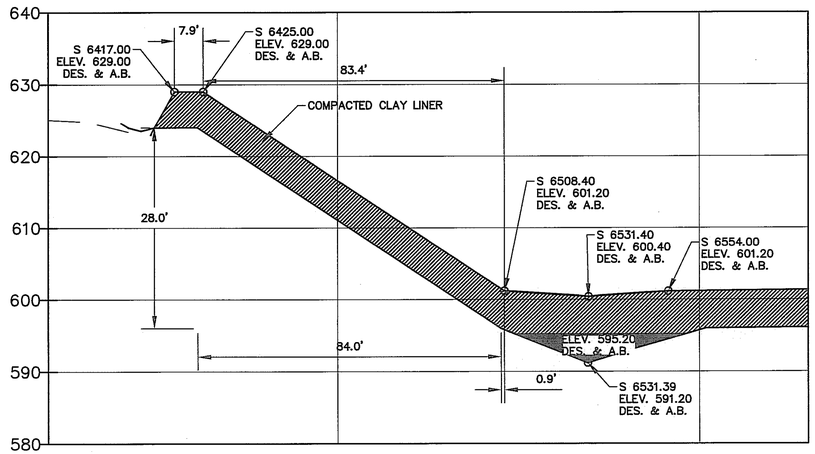

CROSS SECTION K–K LOOKING EAST @ E 8766.1 (FROM B2–011–855)

SCALE: HORIZ. 1" = 20', VERT. 1" = 10'

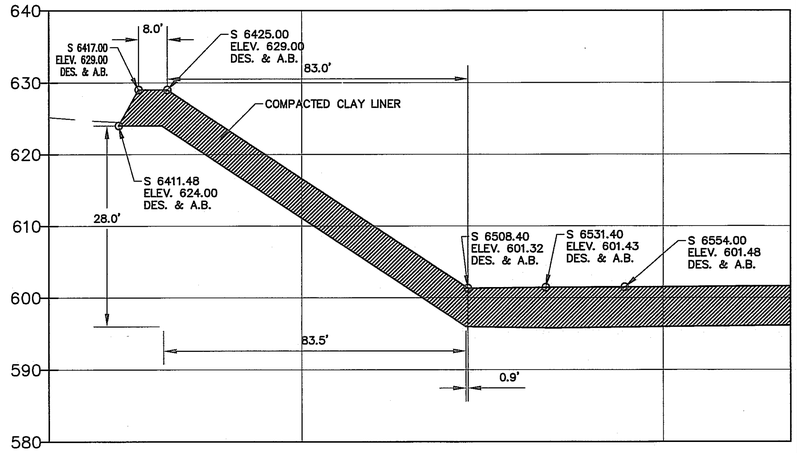

CROSS SECTION M–M LOOKING EAST @ E 8886.1 (FROM B2–011–85

SCALE: HORIZ. 1" = 20', VERT. 1" = 10'

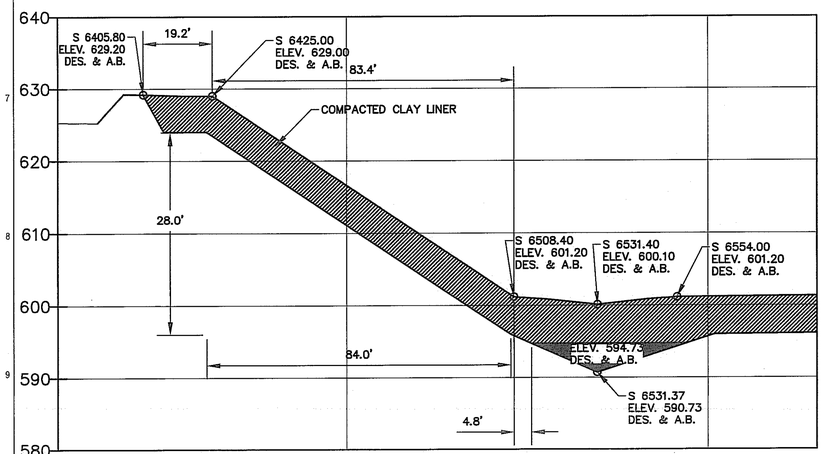

CROSS SECTION J–J LOOKING EAST @ E 8706.1 (FROM B2–011–855)

SCALE: HORIZ. 1" = 20', VERT. 1" = 10'

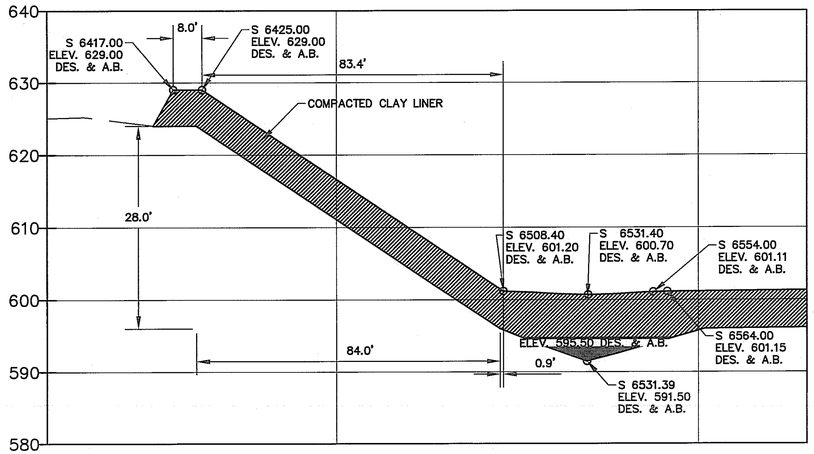

CROSS SECTION L–L LOOKING EAST @ E 8826.1 (FROM B2–011–855)

SCALE: HORIZ. 1" = 20', VERT. 1" = 10'

NOTES:

1. SEE LEACHATE COLLECTION SYSTEM PIPING DESIGN ON B2–013.
2. SEE EXCAVATION LIMITS ON B2–008.

REV. MARK	REVISION	BY	CHK	APP	DATE
A	ADDED SHEETS B2-032 THRU B2-035				

CONSULTANT

URS

URS CORPORATION
MIDLAND, MI
25 BUILDING, DOOR 1

URS PROJECT NUMBER: 41569617

DRAWING ISSUE RECORD

ISSUE NO.	REV	MATERIAL OR JOB SPEC	BID	FAB	CONST	REF
2	0	RECORD DRAWINGS				1/2015
1	A	FOR CONSTRUCTION			3/2014	

DATE ISSUED FOR

DESIGNED	URS CORPORATION	6/2008
DRAWN	URS CORPORATION	6/2008
CHECKED	URS CORPORATION	6/2008
APPROVED	J. ALLEN	6/2008
PROJ. ENGR.	J. ALLEN	6/2008
MFG. REP.	K. DETRICH	6/2008

STATUS | PLANT NO.

P.E. SEAL

DOW THE DOW CHEMICAL COMPANY

MICHIGAN OPERATIONS — MIDLAND, MICHIGAN

PROJECT — 3500 BLDG

SALZBURG LANDFILL
PHASE 1 - CELLS 23 THROUGH 28 PROJECT
NORTH WALL FINISH CLAY SECTIONS

PROJECT NUMBER	SCALE		REV.
119217	AS SHOWN	B2-018-119217	0

PRINTED | VER.

STATE OF MICHIGAN
MICHAEL J. STEPIC
ENGINEER
NO. 60457
LICENSED PROFESSIONAL ENGINEER

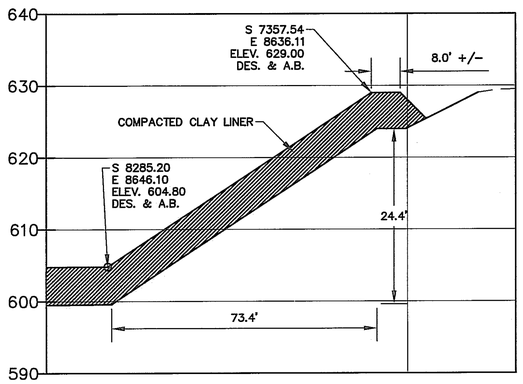

CROSS SECTION N–N LOOKING EAST
(FROM B2–011–855)

SCALE: HORIZ. 1" = 20', VERT. 1" = 10'

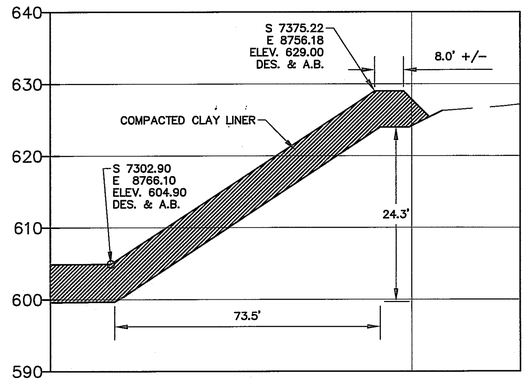

CROSS SECTION P–P LOOKING EAST
(FROM B2–011–855)

SCALE: HORIZ. 1" = 20', VERT. 1" = 10'

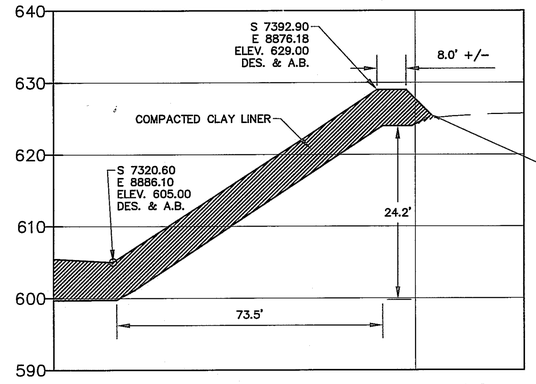

NOTE: TRANSITION FROM TOP OF DIKE TO EDGE OF ASPHALT AS DIRECTED BY OWNER'S REPRESENTATIVE (TYPICAL).

CROSS SECTION R–R LOOKING EAST
(FROM B2–011–855)

SCALE: HORIZ. 1" = 20', VERT. 1" = 10'

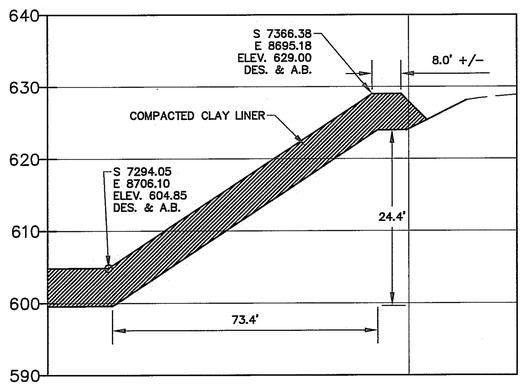

CROSS SECTION O–O LOOKING EAST
(FROM B2–011–855)

SCALE: HORIZ. 1" = 20', VERT. 1" = 10'

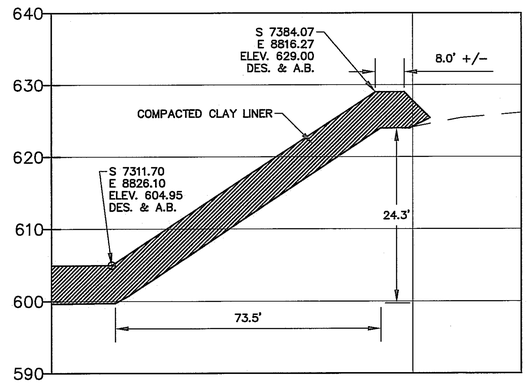

CROSS SECTION Q–Q LOOKING EAST
(FROM B2–011–855)

SCALE: HORIZ. 1" = 20', VERT. 1" = 10'

NOTE: SEE EXCAVATION LIMITS ON B2–009.

REV. MARK	REVISION	BY	CHK	APP	DATE
A	ADDED SHEETS B2-032 THRU B2-036				

CONSULTANT

URS

URS CORPORATION
MIDLAND, MI
25 BUILDING, DOOR 1

URS PROJECT NUMBER: 41569617

DRAWING ISSUE RECORD

ISSUE NO.	REV	MATERIAL OR JOB SPEC	BID	FAB	CONST	REF.
2	0	RECORD DRAWINGS				1/2015
1	A	FOR CONSTRUCTION			3/2014	

DATE ISSUED FOR

DESIGNED	URS CORPORATION	6/2008
DRAWN	URS CORPORATION	6/2008
CHECKED	URS CORPORATION	6/2008
APPROVED	J. ALLEN	6/2008
PROJ. ENGR.	J. ALLEN	6/2008
MFG. REP.	K. DETRICH	6/2008

STATUS | PLANT NO. -

P.E. SEAL

DOW THE DOW CHEMICAL COMPANY

MICHIGAN OPERATIONS — MIDLAND, MICHIGAN

PROJECT — 3500 BLDG

SALZBURG LANDFILL
PHASE 1 - CELLS 23 THROUGH 28 PROJECT
SOUTH WALL FINISHED CLAY SECTIONS

PROJECT NUMBER	SCALE		REV.
119217	AS SHOWN	B2-019-119217	0

PRINTED | VER.

STATE OF MICHIGAN
MICHAEL J. STEPIC
ENGINEER
NO. 60457
LICENSED PROFESSIONAL ENGINEER

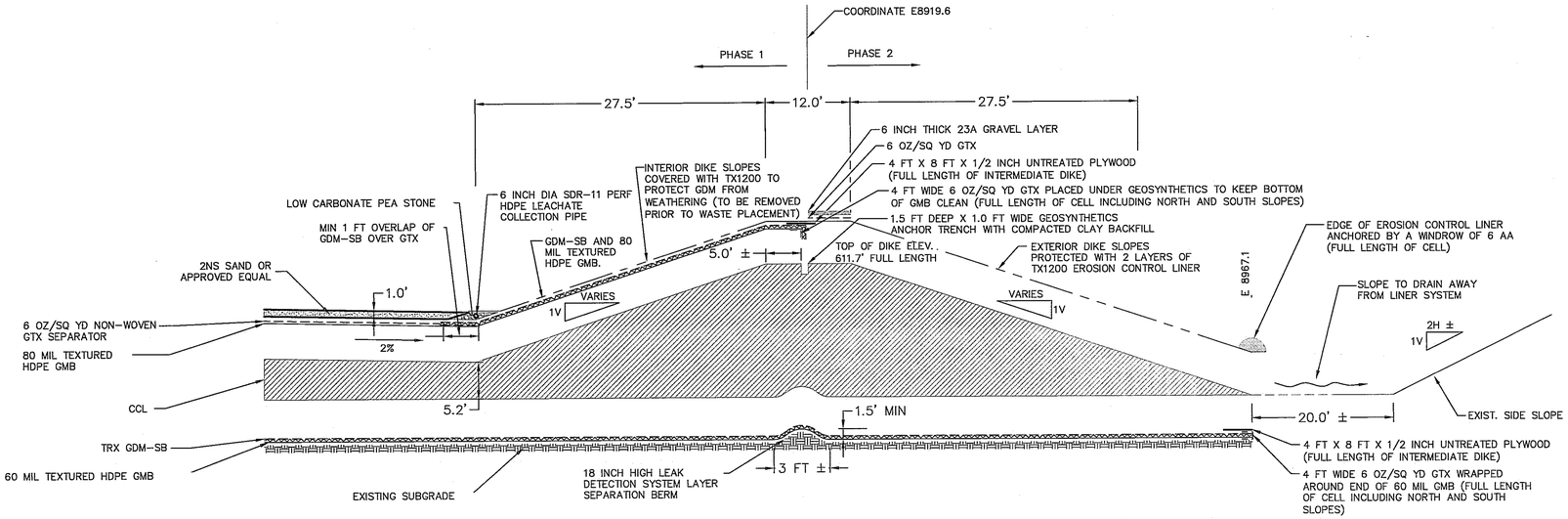

PHASE 1 - INTERMEDIATE DIKE CROSS-SECTION LOOKING NORTH (TYP.)

NOT TO SCALE

NOTE: SEE SHEETS B2-003 AND B2-011 FOR LOCATION.

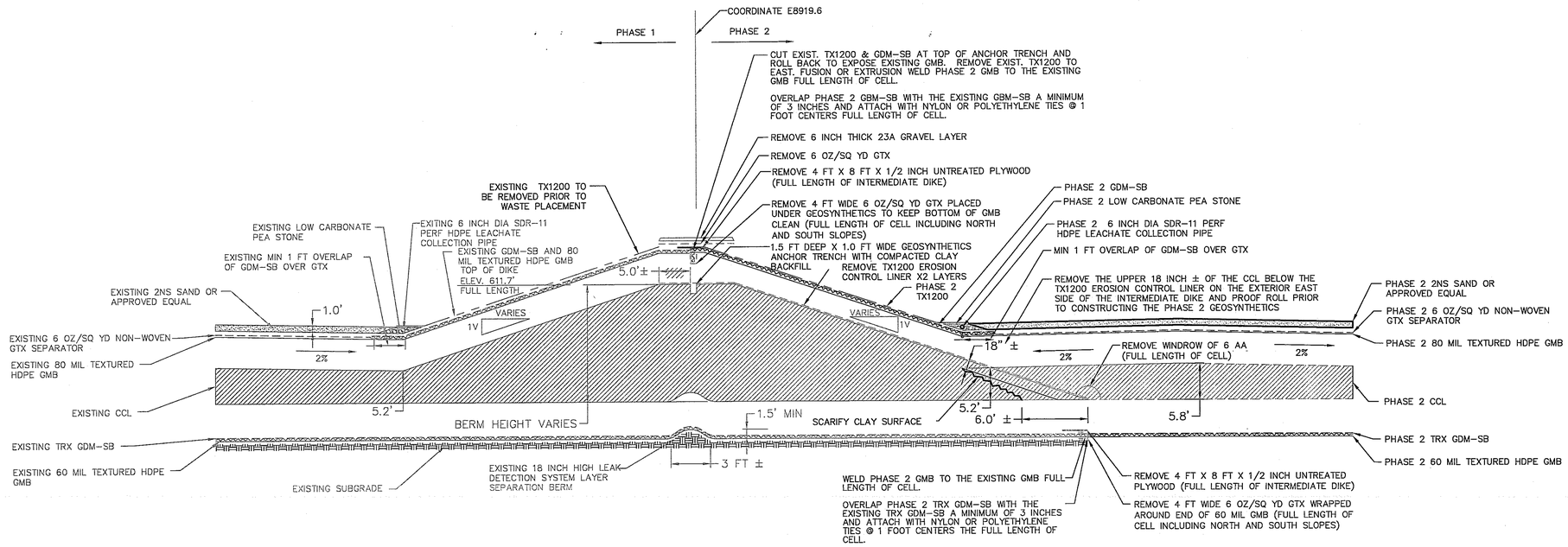

PHASE 2 - INTERMEDIATE DIKE TIE- IN CROSS-SECTION LOOKING NORTH

NOT TO SCALE

NOTE: THE PHASE 2 DETAIL IS FOR INFORMATIONAL PURPOSE ONLY

REV. MARK	REVISION	BY	CHK	APP	DATE
A	ADDED SHEETS B2-032 THRU B2-035				

CONSULTANT

URS

URS CORPORATION
MIDLAND, MI
25 BUILDING, DOOR 1

URS PROJECT NUMBER: 41569617

DRAWING ISSUE RECORD

ISSUE NO.	REV	MATERIAL OR JOB SPEC	BID	FAB	CONST	REF
2	0	RECORD DRAWINGS				1/2015
1	A	FOR CONSTRUCTION			3/2014	

DATE ISSUED FOR

DESIGNED	URS CORPORATION	6/2008
DRAWN	URS CORPORATION	6/2008
CHECKED	URS CORPORATION	6/2008
APPROVED	J. ALLEN	6/2008
PROJ. ENGR.	J. ALLEN	6/2008
MFG. REP.	K. DETRICH	6/2008

STATUS | PLANT NO.

P.E. SEAL

THE DOW CHEMICAL COMPANY
MICHIGAN OPERATIONS — MIDLAND, MICHIGAN
PROJECT — 3600 BLDG

SALZBURG LANDFILL
PHASE 1 - CELLS 23 THROUGH 28 PROJECT
TYPICAL INTERMEDIATE DIKE SECTION

PROJECT NUMBER	SCALE		REV.
119217	AS SHOWN	B2-020-119217	0

PRINTED | VER.

STATE OF MICHIGAN
MICHAEL J. STEPIC
ENGINEER
NO. 60457
LICENSED PROFESSIONAL ENGINEER

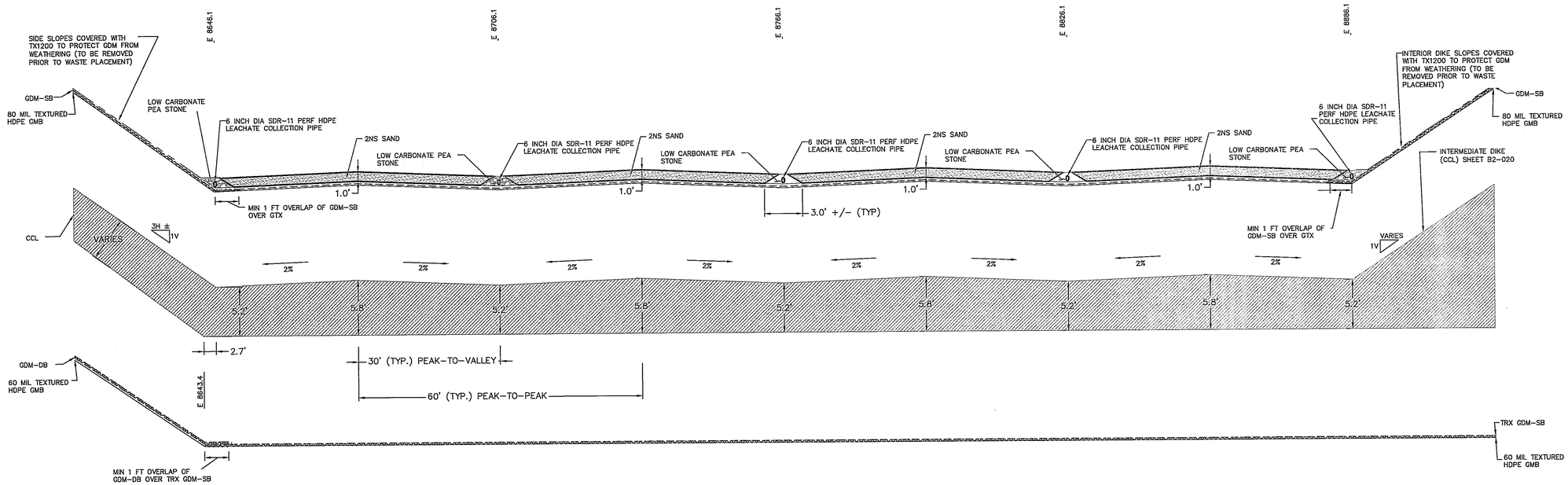

S-S TYPICAL EAST-WEST FLOOR CROSS-SECTION FROM S6564.0 TO THE SOUTH END OF CELL (LOOKING NORTH)

NOT TO SCALE

NOTE: THIS SECTION APPEARS ON SHEETS B2-010 AND B2-013.

REV. MARK	REVISION	BY	CHK	APP	DATE
A	ADDED SHEETS B2-032 THRU B2-036				

CONSULTANT

URS

URS CORPORATION
MIDLAND, MI
28 BUILDING, DOOR 1

URS PROJECT NUMBER: 41569617

DRAWING ISSUE RECORD

ISSUE NO.	REV	MATERIAL OR JOB SPEC	BID	FAB	CONST	REF
2	0	RECORD DRAWINGS				1/2015
1	A	FOR CONSTRUCTION			3/2014	

DATE ISSUED FOR

DESIGNED	URS CORPORATION	6/2008
DRAWN	URS CORPORATION	6/2008
CHECKED	URS CORPORATION	6/2008
APPROVED	J. ALLEN	6/2008
PROJ. ENGR.	J. ALLEN	6/2008
MFG. REP.	K. DETRICH	6/2008

STATUS | PLANT NO.

P.E. SEAL

DOW THE DOW CHEMICAL COMPANY

MICHIGAN OPERATIONS — MIDLAND, MICHIGAN

PROJECT — 3600 BLDG

SALZBURG LANDFILL
PHASE 1 - CELLS 23 THROUGH 28 PROJECT
TYPICAL EAST- WEST FLOOR PROFILE

PROJECT NUMBER	SCALE		REV.
119217	AS SHOWN	B2-021-119217	0

PRINTED | VER.

STATE OF MICHIGAN
MICHAEL J. STEPIC
ENGINEER
NO. 60457
LICENSED PROFESSIONAL ENGINEER

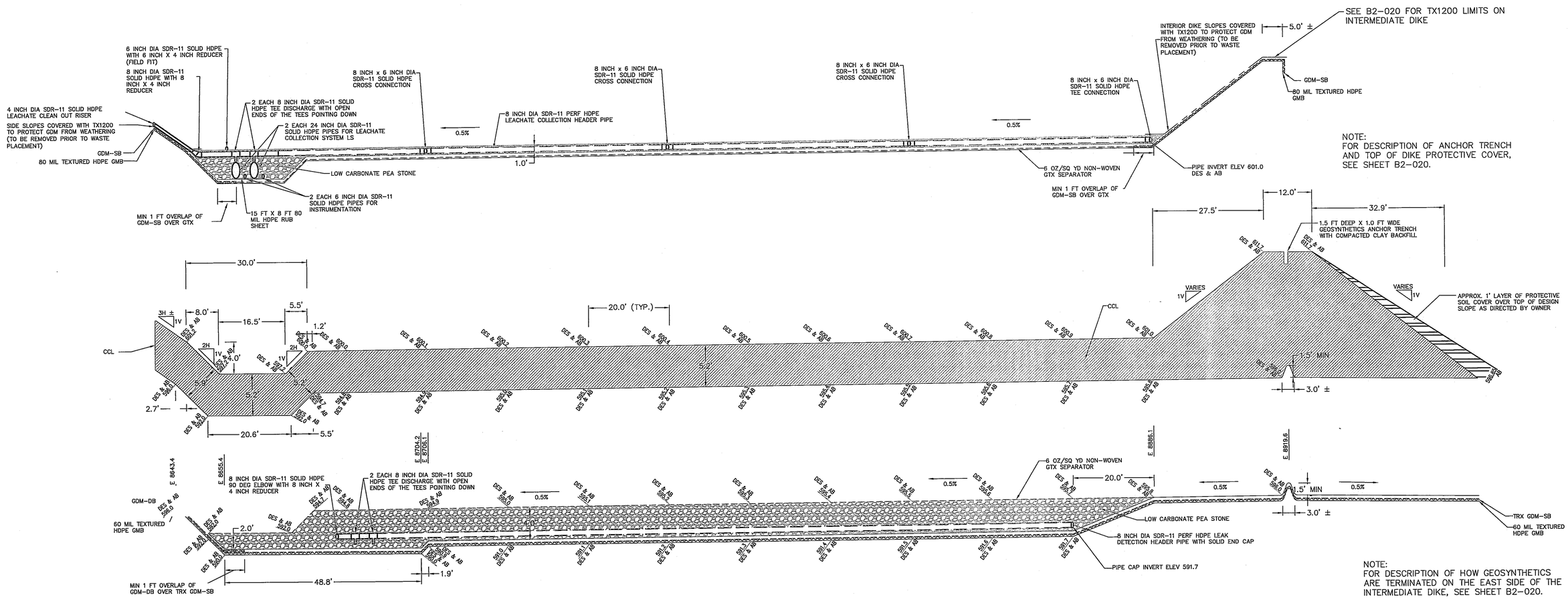

T-T CROSS SECTION - COORDINATE S6531.4 (LOOKING NORTH)

NOT TO SCALE, VERTICAL SCALE EXAGGERATED 2 TO 1

NOTE: THIS SECTION APPEARS ON SHEETS B2-010 AND B2-013.

REV. MARK	REVISION	BY	CHK	APP	DATE
A	ADDED SHEETS B2-032 THRU B2-036				

CONSULTANT

URS

URS CORPORATION
MIDLAND, MI
25 BUILDING, DOOR 1

URS PROJECT NUMBER: 41569617

DRAWING ISSUE RECORD

ISSUE NO.	REV	MATERIAL OR JOB SPEC	BID	FAB	CONST	REF
2	0	RECORD DRAWINGS				1/2015
1	A	FOR CONSTRUCTION			3/2014	

DATE ISSUED FOR

DESIGNED	URS CORPORATION	6/2008
DRAWN	URS CORPORATION	6/2008
CHECKED	URS CORPORATION	6/2008
APPROVED	J. ALLEN	6/2008
PROJ. ENGR.	J. ALLEN	6/2008
MFG. REP.	K. DETRICH	6/2008

STATUS | PLANT NO.

P.E. SEAL

DOW THE DOW CHEMICAL COMPANY

MICHIGAN OPERATIONS — MIDLAND, MICHIGAN

PROJECT — 3600 BLDG.

SALZBURG LANDFILL
PHASE 1 - CELLS 23 THROUGH 28 PROJECT
PROFILE THROUGH LDS AND LCS HEADER PIPES

PROJECT NUMBER	SCALE		REV.
119217	AS SHOWN	B2-022-119217	0

PRINTED | VER.

STATE OF MICHIGAN
MICHAEL J. STEPIC
ENGINEER NO. 60457
LICENSED PROFESSIONAL ENGINEER

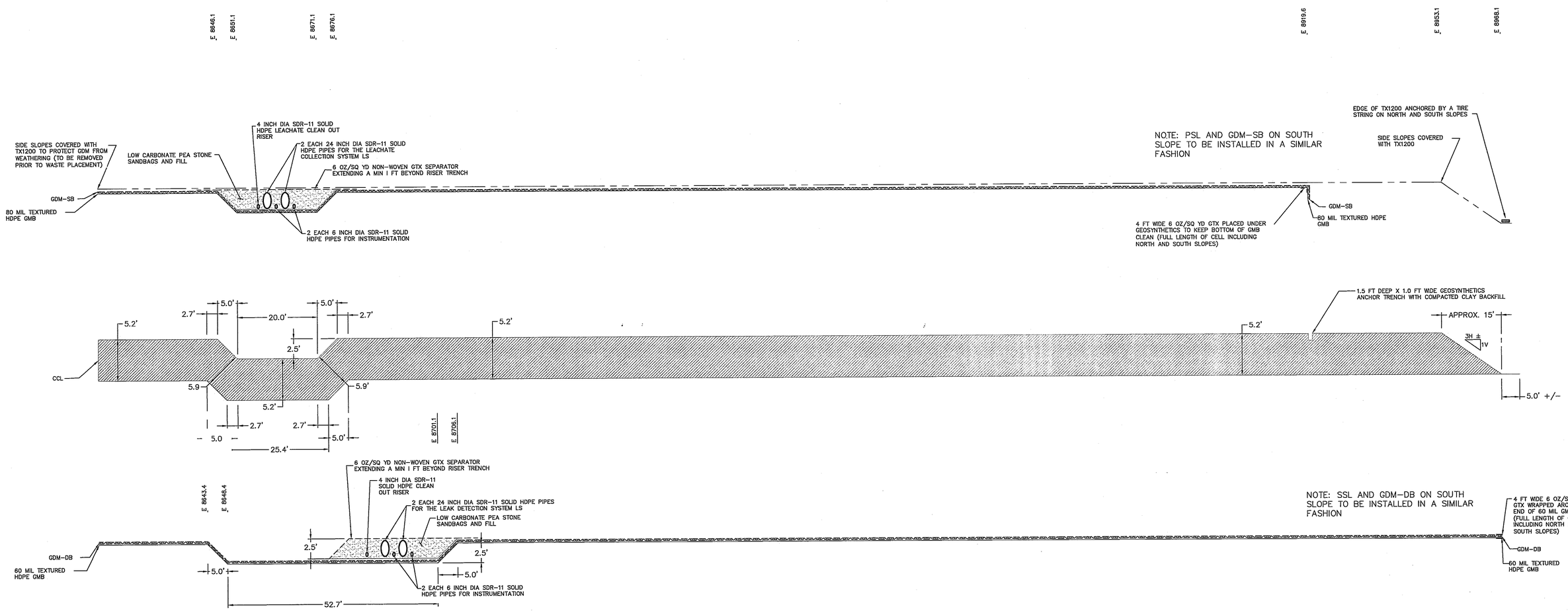

U-U TYPICAL CROSS SECTION THROUGH NORTH WALL (LOOKING NORTH)

NOT TO SCALE, VERTICAL SCALE EXAGGERATED 2 TO 1

NOTES:

THIS REPRESENTS A TYPICAL EAST-WEST CROSS SECTION ANYWHERE THROUGH THE NORTH WALL. THE DIMENSIONS GIVEN ARE PERPENDICULAR TO THE SLOPE OF THE NORTH WALL.

THIS SECTION APPEARS ON SHEETS B2-010 AND B2-013.

REV. MARK	REVISION	BY	CHK	APP	DATE
A	ADDED SHEETS B2-032 THRU B2-036				

CONSULTANT

URS

URS CORPORATION
MIDLAND, MI
25 BUILDING, DCOR 1

URS PROJECT NUMBER: 41569617

DRAWING ISSUE RECORD

ISSUE NO.	REV	MATERIAL OR JOB SPEC	BID	FAB	CONST	REF
2	0	RECORD DRAWINGS				1/2015
1	A	FOR CONSTRUCTION			3/2014	

DATE ISSUED FOR

DESIGNED	URS CORPORATION	6/2008
DRAWN	URS CORPORATION	6/2008
CHECKED	URS CORPORATION	6/2008
APPROVED	J. ALLEN	6/2008
PROJ. ENGR.	J. ALLEN	6/2008
MFG. REP.	K. DETRICH	6/2008

STATUS | PLANT NO.

P.E. SEAL

DOW THE DOW CHEMICAL COMPANY

MICHIGAN OPERATIONS — MIDLAND, MICHIGAN

PROJECT — 3600 BLDG

SALZBURG LANDFILL
PHASE 1 - CELLS 23 THROUGH 28 PROJECT

TYPICAL CROSS SECTION THROUGH NORTH WALL

PROJECT NUMBER	SCALE		REV.
119217	AS SHOWN	B2-023-119217	0

PRINTED | VER.

STATE OF MICHIGAN
MICHAEL J. STEPIC
ENGINEER
NO. 60457
LICENSED PROFESSIONAL ENGINEER

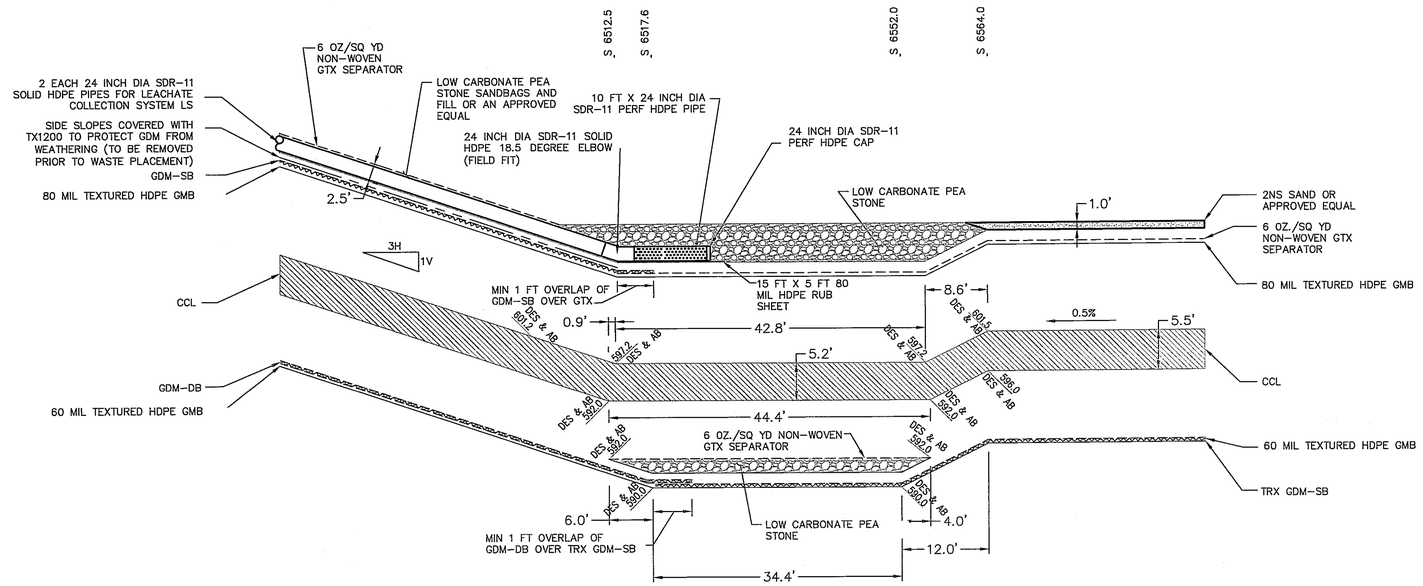

LEACHATE COLLECTION SYSTEM PUMP LEVEL TABLE		
PUMP LEVEL* (IN.)	PUMP LEVEL ELEV. (FT.)	ACTION
48	601.2	HIGH LEVEL ALARM
40	600.5	LAG PUMP ON
33	600.0	LEAD PUMP ON
9	598.0	ALL PUMPS OFF

*REFERENCE ELEV. 597.2

V-V CROSS SECTION THROUGH LCS 24-INCH LS RISER- COORDINATE 8661.1 (LOOKING EAST)
NOT TO SCALE

NOTE: THIS SECTION APPEARS ON SHEETS B2-010 AND B2-013.

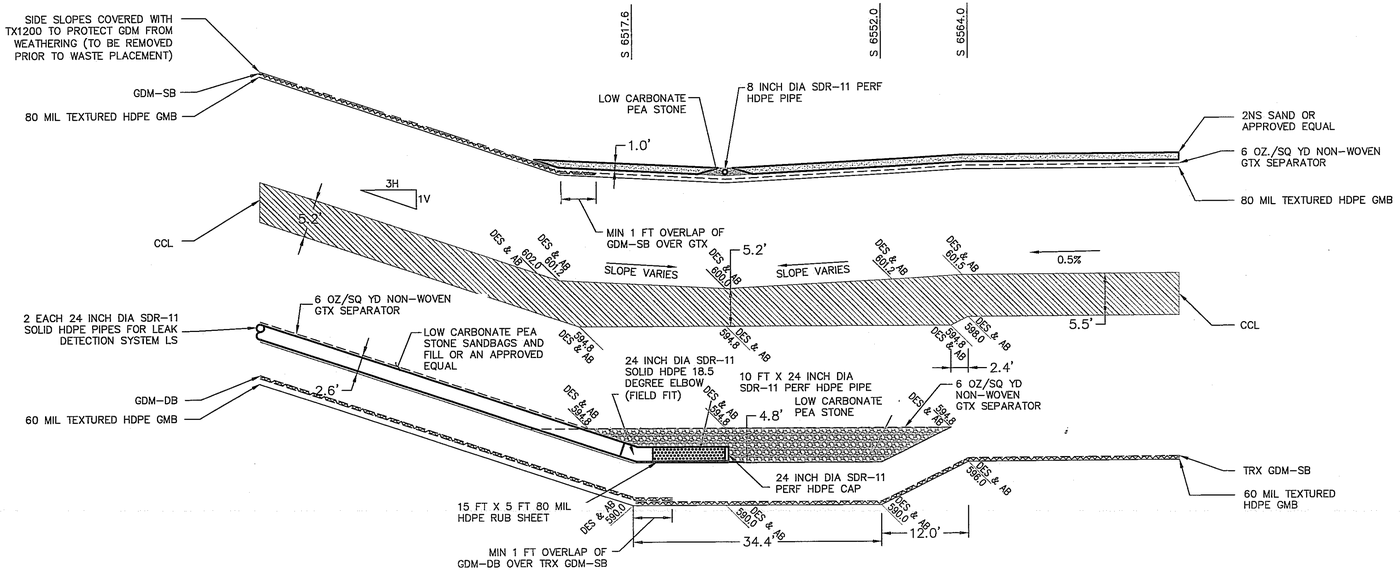

LEAK DETECTION SYSTEM PUMP LEVEL TABLE		
PUMP LEVEL* (IN.)	PUMP LEVEL ELEV. (FT.)	ACTION
48	594.0	HIGH LEVEL ALARM
42	593.5	LAG PUMP ON
36	593.0	LEAD PUMP ON
9	590.8	ALL PUMPS OFF

*REFERENCE ELEV. 590.0

W-W CROSS SECTION THROUGH LDS 24-INCH LS RISER - COORDINATE E8689.8 (LOOKING EAST)
NOT TO SCALE

NOTE: THIS SECTION APPEARS ON SHEETS B2-010 AND B2-013.

REV. MARK	REVISION	BY	CHK	APP	DATE
A	ADDED SHEETS B2-032 THRU B2-036				

CONSULTANT

URS

URS CORPORATION
MIDLAND, MI
25 BUILDING, DOOR 1

URS PROJECT NUMBER: 41569617

DRAWING ISSUE RECORD

ISSUE NO.	REV	MATERIAL OR JOB SPEC	BID	FAB	CONST	REF
2	0	RECORD DRAWINGS				1/2015
1	A	FOR CONSTRUCTION			3/2014	

DATE ISSUED FOR

DESIGNED	URS CORPORATION	6/2008
DRAWN	URS CORPORATION	6/2008
CHECKED	URS CORPORATION	6/2008
APPROVED	J. ALLEN	6/2008
PROJ. ENGR.	J. ALLEN	6/2008
MFG. REP.	K. DETRICH	6/2008

STATUS | PLANT NO.
P.E. SEAL

MICHIGAN OPERATIONS — THE DOW CHEMICAL COMPANY — MIDLAND, MICHIGAN
PROJECT — 3500 BLDG
SALZBURG LANDFILL
PHASE 1 - CELLS 23 THROUGH 28 PROJECT
SECTIONS THROGH 24 INCH LS RISERS

PROJECT NUMBER: 119217 | SCALE: AS SHOWN | B2-024-119217 | REV. 0

PRINTED | VER.

STATE OF MICHIGAN — MICHAEL J. STEPIC — ENGINEER NO. 60457 — LICENSED PROFESSIONAL ENGINEER
12-8-15

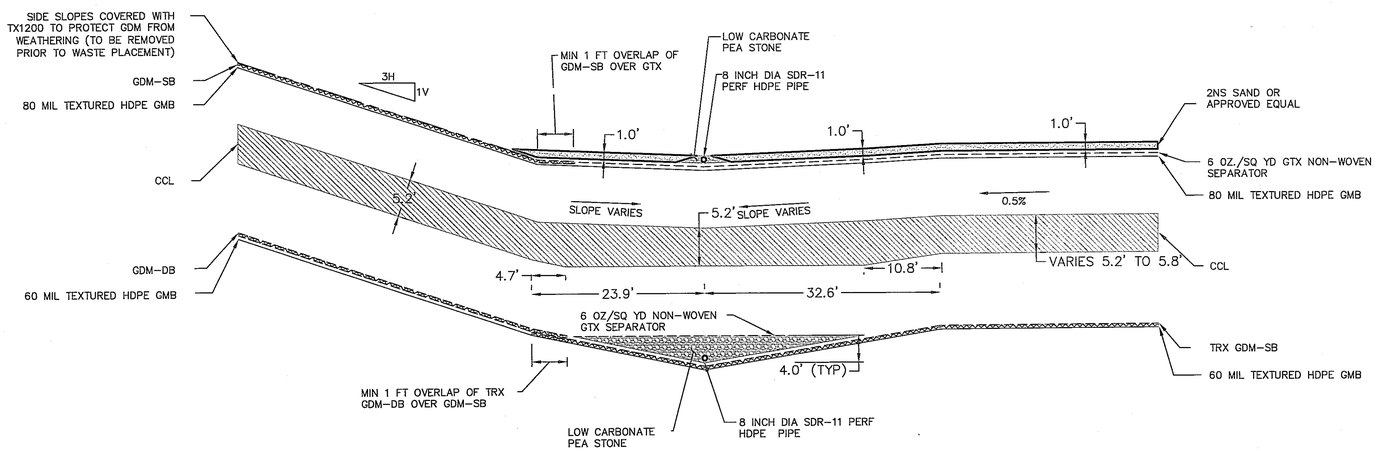

TYPICAL HEADER TRENCH CROSS SECTION (LOOKING EAST)

NOT TO SCALE

REV. MARK	REVISION	BY	CHK	APP	DATE
A	ADDED SHEETS B2-032 THRU B2-036				

CONSULTANT

URS

URS CORPORATION
MIDLAND, MI
25 BUILDING, DOOR 1

URS PROJECT NUMBER: 41569617

DRAWING ISSUE RECORD

ISSUE NO.	REV	MATERIAL OR JOB SPEC	BID	FAB	CONST	REF
2	0	RECORD DRAWINGS				1/2015
1	A	FOR CONSTRUCTION			3/2014	

DATE ISSUED FOR

DESIGNED	URS CORPORATION	6/2008
DRAWN	URS CORPORATION	6/2008
CHECKED	URS CORPORATION	6/2008
APPROVED	J. ALLEN	6/2008
PROJ. ENGR.	J. ALLEN	6/2008
MFG. REP.	K. DETRICH	6/2008

STATUS | PLANT NO.

P.E. SEAL

DOW THE DOW CHEMICAL COMPANY

MICHIGAN OPERATIONS — MIDLAND, MICHIGAN

PROJECT — 3600 BLDG

SALZBURG LANDFILL
PHASE 1 - CELLS 23 THROUGH 28 PROJECT
TYPICAL HEADER THROUGH PROFILE

PROJECT NUMBER	SCALE		REV.
119217	AS SHOWN	B2-025-119217	0

PRINTED | VER.

STATE OF MICHIGAN
MICHAEL STEPIC
ENGINEER
NO. 60457
LICENSED PROFESSIONAL ENGINEER

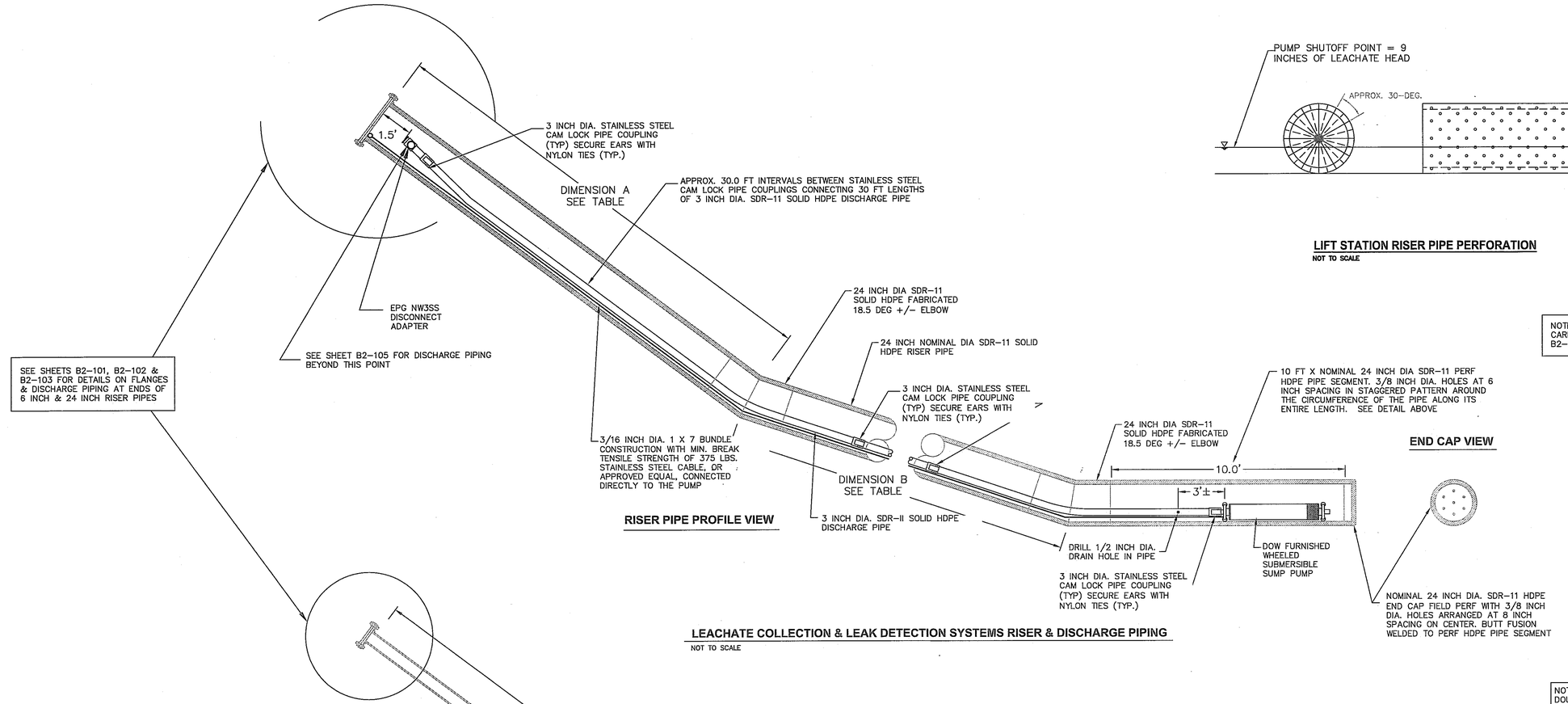

RISER PIPE PROFILE VIEW

END CAP VIEW

LEACHATE COLLECTION & LEAK DETECTION SYSTEMS RISER & DISCHARGE PIPING

NOT TO SCALE

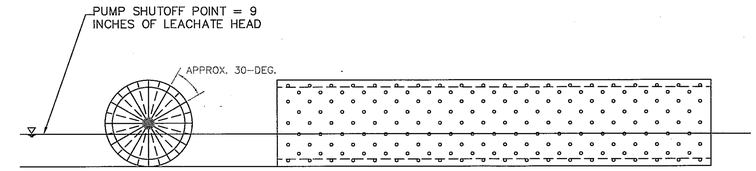

LIFT STATION RISER PIPE PERFORATION

NOT TO SCALE

NOTE: RISER PIPES SHALL BE BACKFILLED WITH LOW CARBONATE PEA STONE SAND BAGS AND FILL AS NOTED ON B2-023, B2-024 & B2-102 OR AN APPROVED EQUAL.

NOTE: ALL PERF 6 INCH & 24 INCH HDPE PIPE SHALL BE DOUBLE WRAPPED ALONG THEIR ENTIRE LENGTHS WITH A CONTRACTOR FURNISHED, ENKAMAT 7020 PLASTIC MESH, MESH TO BE ANCHORED TO PIPE WITH DOW APPROVED PLASTIC TIES OR BANDING @ 2 FEET C-C±

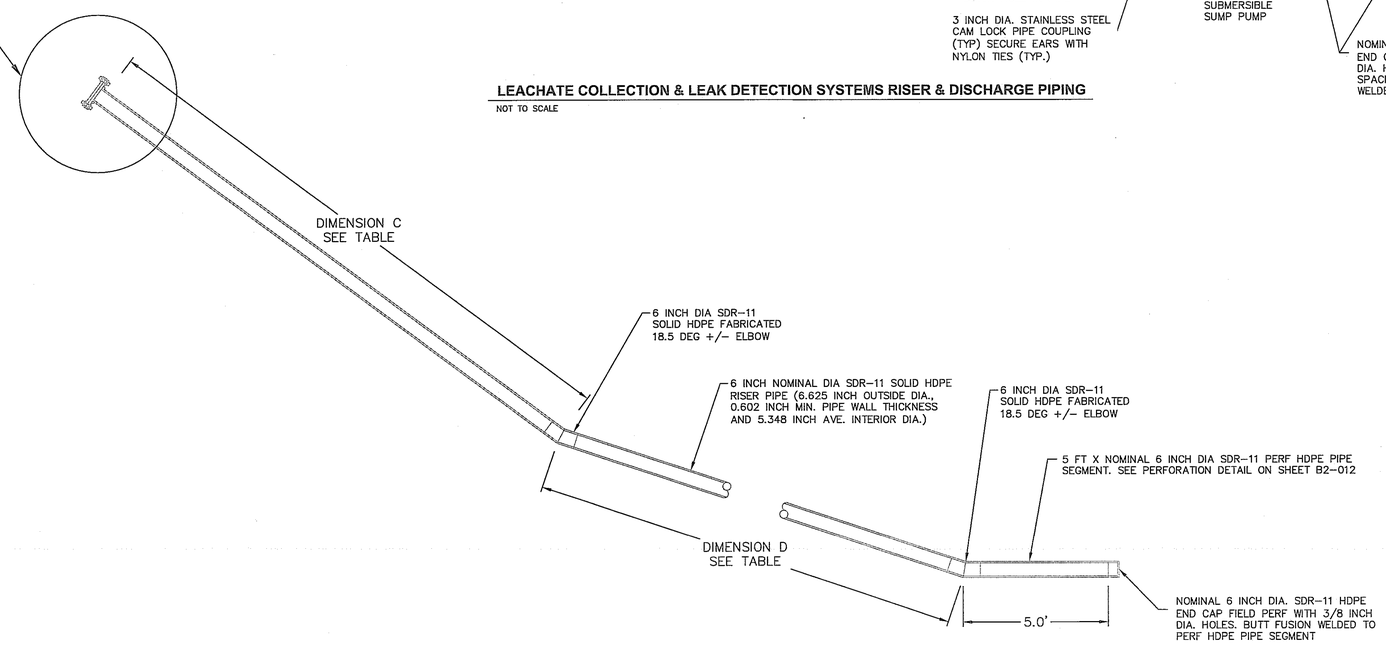

LEACHATE COLLECTION & LEAK DETECTION SYSTEMS INSTRUMENTATION RISER PIPE

NOT TO SCALE

PIPE SEGMENT LENGTHS

		PIPE DIAMETER	LENGTH	PIECES REQ'D
A	LCS	24"	9'1"	2
A	LDS	24"	12'10"	2
B	LCS	24"	94'7"	2
B	LDS	24"	107'2"	2
C	LCS	6"	9'1"	2
C	LDS	6"	12'10"	2
D	LCS	6"	94'9"	2
D	LDS	6"	107'5"	2

NOTE: DIMENSIONS ARE APPROXIMATE AND SHALL BE FIELD-VERIFIED.

REV. MARK	REVISION	BY	CHK	APP	DATE
A	ADDED SHEETS B2-032 THRU B2-033				

CONSULTANT

URS

URS CORPORATION
MIDLAND, MI
28 BUILDING, DOOR 1

URS PROJECT NUMBER: 41569617

DRAWING ISSUE RECORD

ISSUE NO.	REV	MATERIAL OR JOB SPEC	BID	FAB	CONST	REF
2	0	RECORD DRAWINGS				1/2015
1	A	FOR CONSTRUCTION			3/2014	

DATE ISSUED FOR

DESIGNED	URS CORPORATION	6/2008
DRAWN	URS CORPORATION	6/2008
CHECKED	URS CORPORATION	6/2008
APPROVED	J. ALLEN	6/2008
PROJ. ENGR.	J. ALLEN	6/2008
MFG. REP.	K. DETRICH	6/2008

STATUS | PLANT NO.

P.E. SEAL

DOW THE DOW CHEMICAL COMPANY

MICHIGAN OPERATIONS — MIDLAND, MICHIGAN

PROJECT — 3600 BLDG

SALZBURG LANDFILL
PHASE 1 - CELLS 23 THROUGH 28 PROJECT
24 INCH & 6 INCH RISER PIPE DETAILS

PROJECT NUMBER	SCALE		REV.
119217	AS SHOWN	B2-026-119217	0

PRINTED | VER.

STATE OF MICHIGAN
MICHAEL STEPIC
ENGINEER NO. 60457
LICENSED PROFESSIONAL ENGINEER

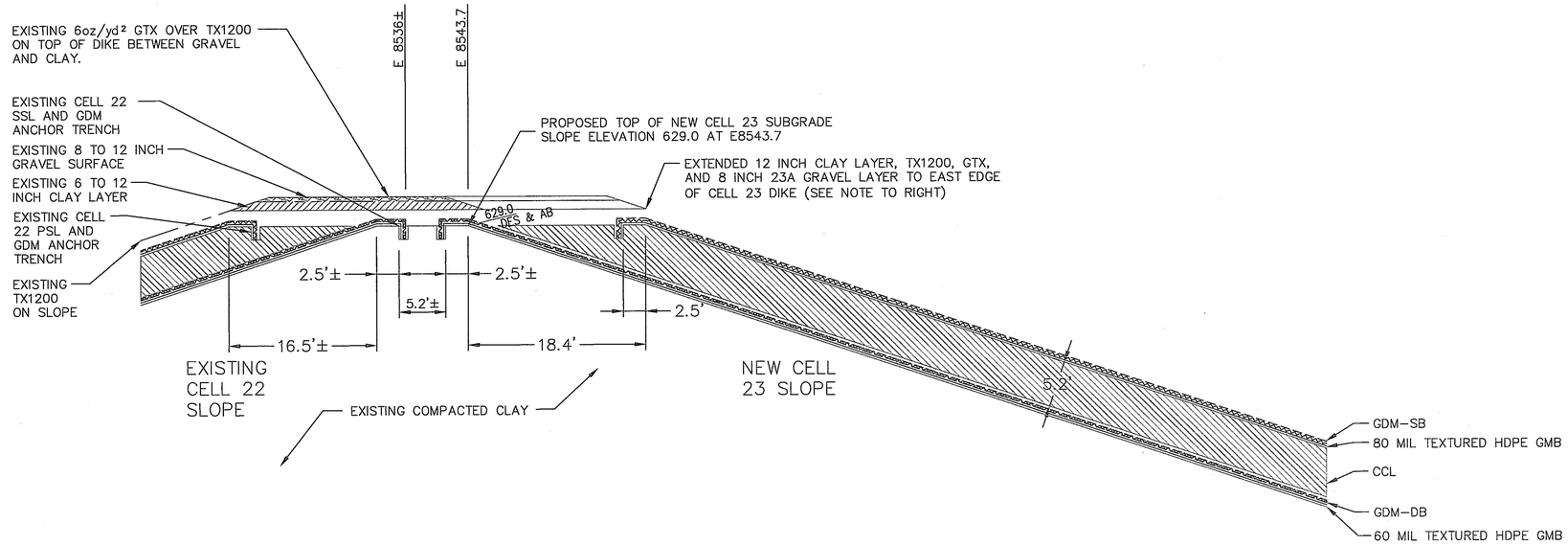

CELLS 22/23 TOP OF DIKE DETAIL

NOT TO SCALE

NOTES:

1. THE CONTRACTOR SHALL REMOVE THE EXISTING TX1200, TIRE STRINGS, SIGN POSTS, SAND BAGS & ASSOCIATED MATERIALS ON THE CELL 23 SLOPE. TIRE STRINGS SHALL BE SALVAGED & REUSED ON THIS PROJECT. ALL OTHER ITEMS SHALL BE DISPOSED OF AS DIRECTED BY DOW.

2. THE CONTRACTOR SHALL CAREFULLY REMOVE THE EAST 8 FEET TO 10 FEET OF THE EXISTING GRAVEL, TX1200, GTX & CLAY ON TOP OF THE CELL 22/23 DIKE TO ELEVATION 629.0. THE CONTRACTOR SHALL HAND LOCATE THE EXISTING CELL 22 GDM WHERE IT ENTERS THE ANCHOR TRENCH. ALL MATERIALS REMOVED DURING THIS TASK SHALL BE DISPOSED OF AS DIRECTED BY DOW.

3. AS SOON AS PRACTICAL AFTER THE EXISTING CELL 22 GDM IS EXPOSED, THE CONTRACTOR SHALL COVER IT WITH A 6 FOOT TO 8 FOOT WIDE STRIP OF CONTRACTOR FURNISHED 40 MIL TO 60 MIL HDPE LINER TO PROTECT IT FROM POSSIBLE CONTAMINATION. THE LINER STRIP SHALL BE ANCHORED WITH SAND BAGS FOR THE FULL PERIMETER AND AT ADJACENT PANEL JOINTS. ADJACENT PANELS SHALL BE OVERLAPPED 3 FEET & SAND BAGGED OR OVERLAPPED 1 FOOT AND WELDED. THE LINER STRIP SHALL BE CUT FROM A ROLL OF LINER BY THE CONTRACTOR.

4. AFTER INSTALLATION THE CONTRACTOR SHALL CHECK THE LINER STRIP DAILY AND MAINTAIN IT FOR THE DURATION OF THE PROJECT UNTIL IT IS NO LONGER NEEDED. ANY PROBLEMS FOUND WITH THE LINER STRIP SHALL BE REPAIRED IMMEDIATELY BY THE CONTRACTOR AS DIRECTED BY DOW.

5. WHEN NO LONGER NEEDED, THE CONTRACTOR SHALL REMOVE THE LINER STRIP AND ALL ANCHOR MATERIALS. ALL MATERIALS REMOVED SHALL BE DISPOSED OF AS DIRECTED BY DOW.

6. AFTER THE LINER STRIP IS REMOVED, THE CONTRACTOR SHALL PLACE NEW CLAY, TX1200, GTX & GRAVEL ON TOP OF THE CELL 22/23 DIKE. THESE NEW MATERIALS SHALL BE PLACED IN ALL AREAS WHERE THE ORIGINAL MATERIALS WERE REMOVED AND ALSO OVER THE NEWLY CONSTRUCTED SECTION OF THE CELL 23 DIKE (SEE DETAIL TO THE LEFT). THE NEW CLAY SHALL BE PLACED OVER ANY EXPOSED GDM AS SOON AS POSSIBLE AFTER THE LINER STRIP IS REMOVED TO MINIMIZE THE POTENTIAL FOR CONTAMINATION. THE ASSOCIATED TX1200, GTX & GRAVEL MATERIALS SHALL BE PLACED AS SOON AS PRACTICAL AFTER THE CLAY.

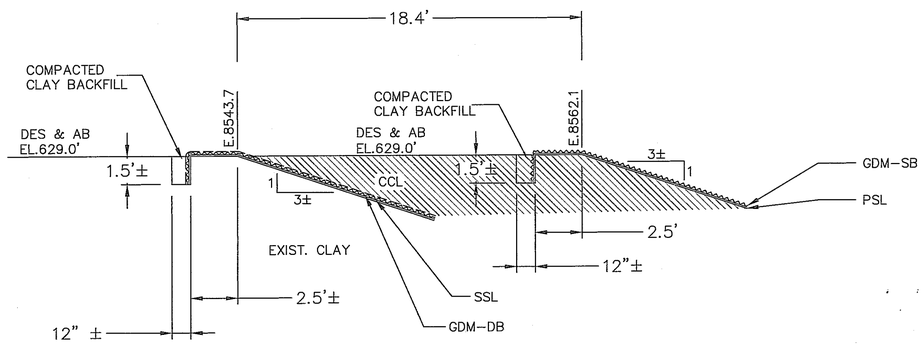

ANCHOR TRENCH DETAIL WEST WALL (CELL 23) - LOOKING NORTH

NOT TO SCALE

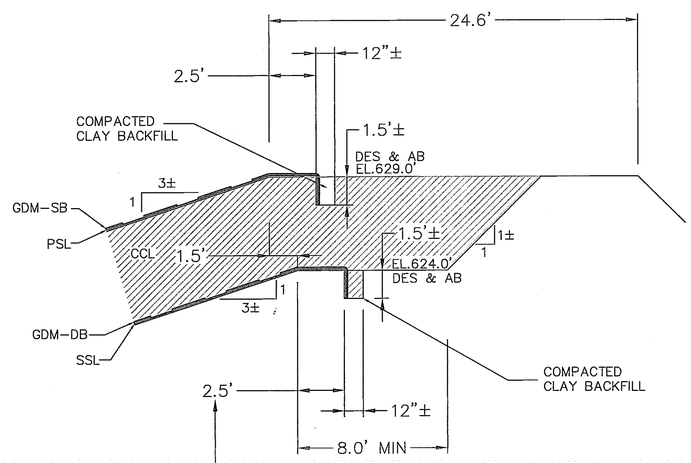

NOTE: SEE DRAWINGS B2-003A AND B2-102 FOR SSL TRENCH LOCATION IN SIDE SLOPE LS AREA.

ANCHOR TRENCH DETAIL NORTH & SOUTH WALL

NOT TO SCALE

NOTE:
SEE INTERMEDIATE DIKE SECTIONS ON B2-020 FOR ANCHOR TRENCH LOCATION DETAILS OF INTERMEDIATE DIKE

REV. MARK	REVISION	BY	CHK	APP	DATE
A	ADDED SHEETS B2-032 THRU B2-036				

CONSULTANT: URS CORPORATION, MIDLAND, MI, 29 BUILDING, DOOR 1

URS PROJECT NUMBER: 41569617

DRAWING ISSUE RECORD

ISSUE NO.	REV	MATERIAL OR JOB SPEC	BID	FAB	CONST	REF
2	0	RECORD DRAWINGS				1/2015
1	A	FOR CONSTRUCTION			3/2014	

DATE ISSUED FOR

DESIGNED	URS CORPORATION	6/2008
DRAWN	URS CORPORATION	6/2008
CHECKED	URS CORPORATION	6/2008
APPROVED	J. ALLEN	6/2008
PROJ. ENGR.	J. ALLEN	6/2008
MFG. REP.	K. DETRICH	6/2008

STATUS | PLANT NO. | P.E. SEAL

THE DOW CHEMICAL COMPANY
MICHIGAN OPERATIONS — MIDLAND, MICHIGAN — 3500 BLDG

PROJECT: SALZBURG LANDFILL
PHASE 1 - CELLS 23 THROUGH 28 PROJECT
CELL 22/23 TOP OF DIKE & ANCHOR TRENCH DETAILS

PROJECT NUMBER: 119217 | SCALE: AS SHOWN | B2-027-119217 | REV. 0

STATE OF MICHIGAN — MICHAEL J. STEPIC — ENGINEER NO. 60457 — LICENSED PROFESSIONAL ENGINEER

PRINTED | VER.

NOTE: SEE SPECS FOR TIRE, CABLE AND CONNECTION HARDWARE REQUIREMENTS

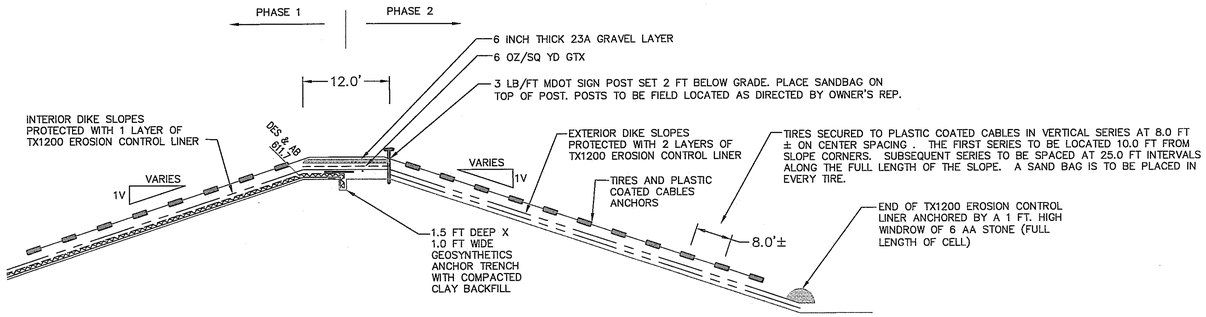

TX1200 ANCHOR DETAIL - INTERMEDIATE DIKE (LOOKING NORTH)

NOT TO SCALE

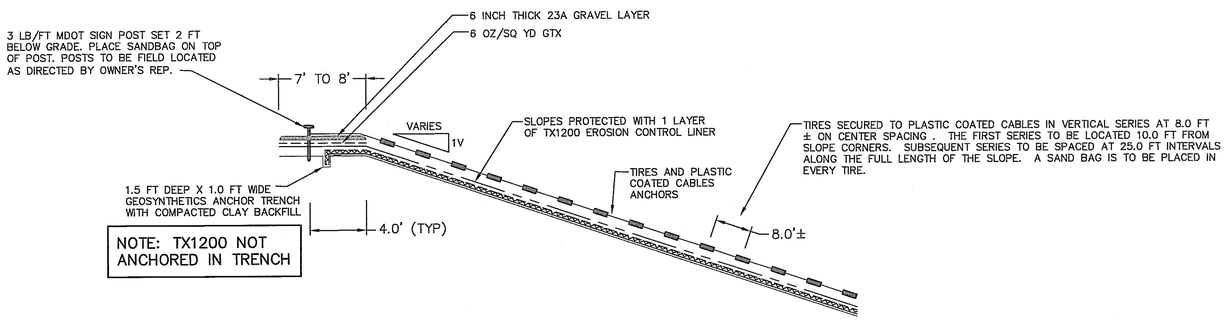

NOTE: TX1200 NOT ANCHORED IN TRENCH

TX1200 ANCHOR DETAIL - NORTH, SOUTH AND WEST WALLS

NOT TO SCALE

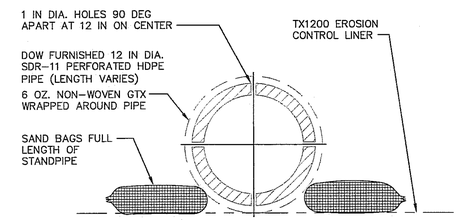

STANDPIPE PERFORATIONS AND GTX FILTER COVER

NOT TO SCALE

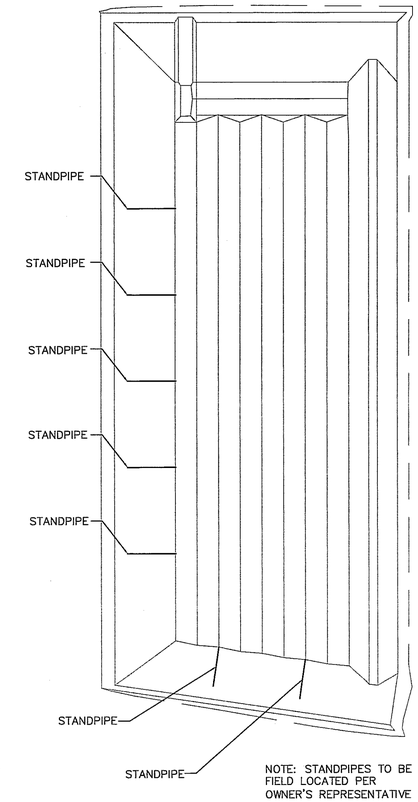

NOTE: STANDPIPES TO BE FIELD LOCATED PER OWNER'S REPRESENTATIVE

APPROXIMATE STANDPIPE LOCATIONS

NOT TO SCALE

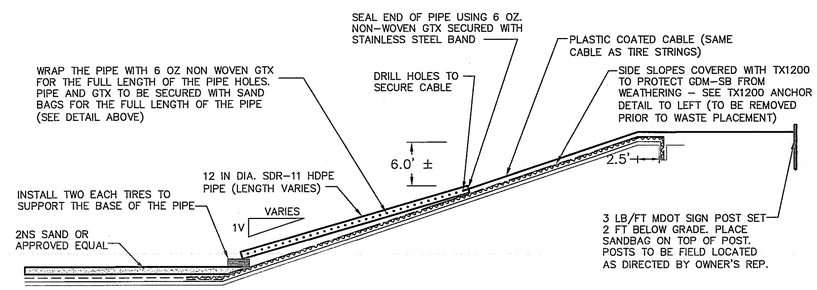

STANDPIPE DETAIL

NOT TO SCALE

REV. MARK	REVISION	BY	CHK	APP	DATE
A	ADDED SHEETS B2-032 THRU B2-035				

CONSULTANT

URS

URS CORPORATION
MIDLAND, MI
25 BUILDING, DOOR 1

URS PROJECT NUMBER: 41569617

DRAWING ISSUE RECORD

ISSUE NO.	REV	MATERIAL OR JOB SPEC	BID	FAB	CONST	REF
2	0	RECORD DRAWINGS				1/2015
1	A	FOR CONSTRUCTION			3/2014	

DATE ISSUED FOR

DESIGNED	URS CORPORATION	6/2008
DRAWN	URS CORPORATION	6/2008
CHECKED	URS CORPORATION	6/2008
APPROVED	J. ALLEN	6/2008
PROJ. ENGR.	J. ALLEN	6/2008
MFG. REP.	K. DETRICH	6/2008

STATUS | PLANT NO.

P.E. SEAL

DOW THE DOW CHEMICAL COMPANY

MICHIGAN OPERATIONS — MIDLAND, MICHIGAN

PROJECT — 3600 BLDG

SALZBURG LANDFILL
PHASE 1 - CELLS 23 THROUGH 28 PROJECT
STANDPIPE AND TIRE STRING DETAILS

PROJECT NUMBER	SCALE		REV.
119217	AS SHOWN	B2-028-119217	0

PRINTED | VER.

STATE OF MICHIGAN
MICHAEL J. STEPIC
ENGINEER NO. 60457
LICENSED PROFESSIONAL ENGINEER

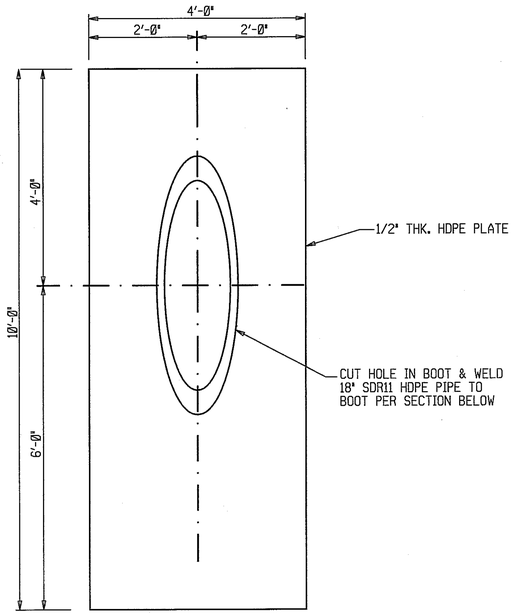

BOOT DETAIL (2 REQ'D.)

SCALE: 3/4" = 1'-0"

NOTE: EARTHWORK CONTRACTOR RESPONSIBLE FOR 1/2" HDPE PLATE. GEOSYNTHETIC CONTRACTOR RESPONSIBLE FOR ALL PSL, SSL & EXTRUSION WELDS.

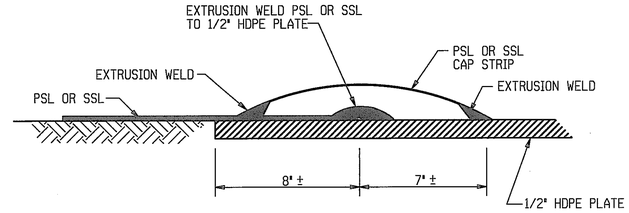

ANCHOR DETAIL

SCALE: 3" = 1'-0"

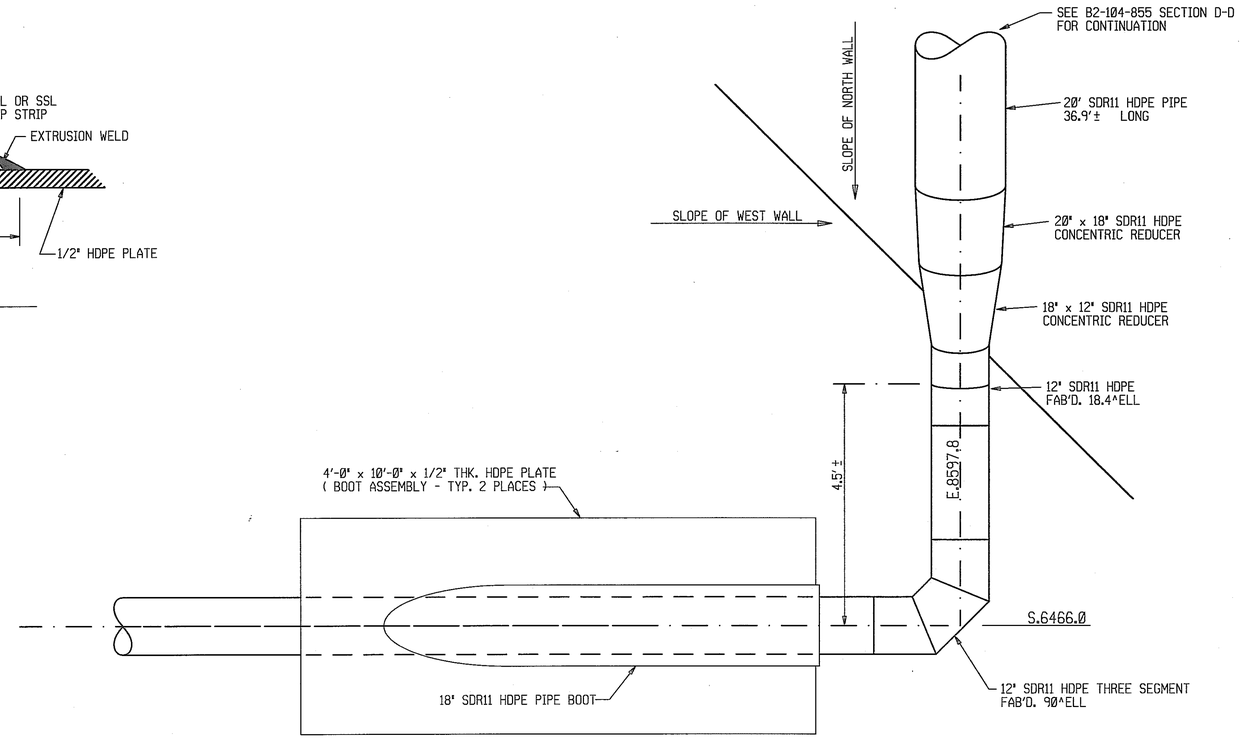

PARTIAL PLAN VIEW

SCALE: 3/4" = 1'-0"

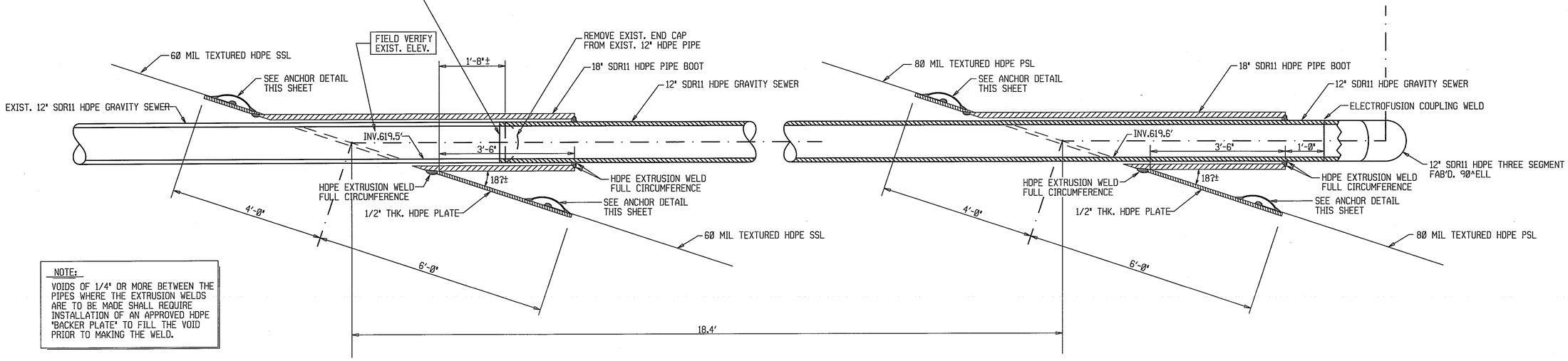

NOTE:
VOIDS OF 1/4" OR MORE BETWEEN THE PIPES WHERE THE EXTRUSION WELDS ARE TO BE MADE SHALL REQUIRE INSTALLATION OF AN APPROVED HDPE "BACKER PLATE" TO FILL THE VOID PRIOR TO MAKING THE WELD.

PRIMARY SYNTHETIC LINER (PSL) , SECONDARY SYNTHETIC LINER (SSL) & 12" GRAVITY SEWER BOOT ASSEMBLY DETAILS FOR CELL 23 DIKE

SCALE: 3/4" = 1'-0"

REV. MARK	REVISION	BY	CHK	APP	DATE
A	ADDED SHEETS B2-032 THRU B2-035				

CONSULTANT

URS

URS CORPORATION
MIDLAND, MI
25 BUILDING, DOOR 1

URS PROJECT NUMBER: 41569617

DRAWING ISSUE RECORD

ISSUE NO.	REV	MATERIAL OR JOB SPEC	BID	FAB	CONST	REF
2	0	RECORD DRAWINGS				1/2015
1	A	FOR CONSTRUCTION			3/2014	

DATE ISSUED FOR

DESIGNED	URS CORPORATION	6/2008
DRAWN	URS CORPORATION	6/2008
CHECKED	URS CORPORATION	6/2008
APPROVED	J. ALLEN	6/2008
PROJ. ENGR.	J. ALLEN	6/2008
MFG. REP.	K. DETRICH	6/2008

STATUS | PLANT NO.

P.E. SEAL

DOW THE DOW CHEMICAL COMPANY

MICHIGAN OPERATIONS — MIDLAND, MICHIGAN

PROJECT — 3600 BLDG

SALZBURG LANDFILL
PHASE 1 - CELLS 23 THROUGH 28 PROJECT
12" GRAVITY SEWER BOOT DETAILS

PROJECT NUMBER	SCALE		REV.
119217	AS SHOWN	B2-029-119217	0

PRINTED | VER.

STATE OF MICHIGAN — MICHAEL J. STEPIC — ENGINEER NO. 60457 — LICENSED PROFESSIONAL ENGINEER

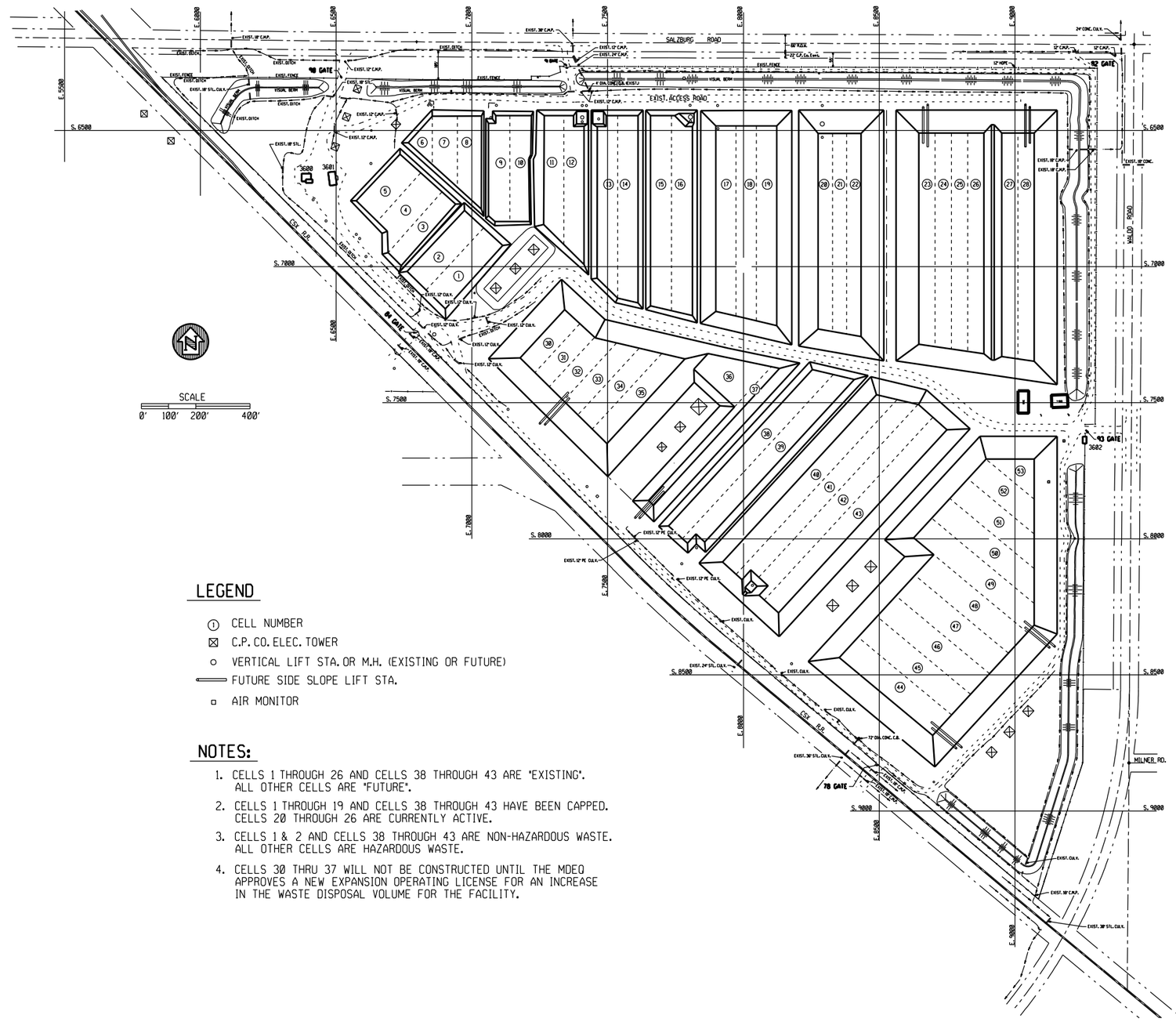

LEGEND

- ① CELL NUMBER
- ⊠ C.P. CO. ELEC. TOWER
- ○ VERTICAL LIFT STA. OR M.H. (EXISTING OR FUTURE)
- FUTURE SIDE SLOPE LIFT STA.
- □ AIR MONITOR

NOTES:

1. CELLS 1 THROUGH 26 AND CELLS 38 THROUGH 43 ARE "EXISTING". ALL OTHER CELLS ARE "FUTURE".
2. CELLS 1 THROUGH 19 AND CELLS 38 THROUGH 43 HAVE BEEN CAPPED. CELLS 20 THROUGH 26 ARE CURRENTLY ACTIVE.
3. CELLS 1 & 2 AND CELLS 38 THROUGH 43 ARE NON-HAZARDOUS WASTE. ALL OTHER CELLS ARE HAZARDOUS WASTE.
4. CELLS 30 THRU 37 WILL NOT BE CONSTRUCTED UNTIL THE MDEQ APPROVES A NEW EXPANSION OPERATING LICENSE FOR AN INCREASE IN THE WASTE DISPOSAL VOLUME FOR THE FACILITY.

REV. MARK	REVISION	BY	CHK	APP	DATE
A	REVISED CONFIGURATION OF CELLS 23 THRU 28 AND CELLS 44 THRU 53 - ALSO ADDED INTERMEDIATE DIKE IN CELLS 23 THRU 28	LEG	JJA	JJA	2/08
B	REVISED TO NOTE CELLS 30 THRU 37 WILL NOT BE BUILT UNTIL CONSTRUCTION PERMIT VOLUME MOD IS APPROVED	LEG	JJA	JJA	9/08
C	REVISED NOTE 1 - REPLACED THE NUMBER "22" WITH "26"	HG			6/15
D	REVISED NOTE 2-CHANGED THE SECOND SENTENCE TO "CELLS 20 THROUGH 26 ARE CURRENTLY ACTIVE"	HG			6/15
E	REVISED NOTE 4- REPLACED WORDS "CONSTRUCTION PERMIT MODIFICATION" TO "NEW EXPANSION OPERATING LICENSE"	HG			6/15

DRAWING ISSUE RECORD

ISSUE NO.	REV	MATERIAL OR JOB SPEC	BID	FAB	CONST	REF
			DATE ISSUED FOR			

DESIGNED	J.J. ALLEN	11/05
DRAWN	L.E. GIRARDIN	11/05
CHECKED	J.J.A.	11/05
APPROVED	J.J.A.	11/05
PROJ. ENGR.	J.J. ALLEN	11/05
MFG. REP.	STEVE LUCAS	11/05

STATUS | PLANT NO. | P.E. SEAL

THE DOW CHEMICAL COMPANY

MICHIGAN DIVISION — MIDLAND, MICHIGAN

SALZBURG LANDFILL — 3600 BLDG.

EXISTING & FUTURE CELL LAYOUT

EJN NUMBER	SCALE		REV.
114291	1" = 200'-0"	B2-001-1374	E

2 PLN

PRINTED | VER.

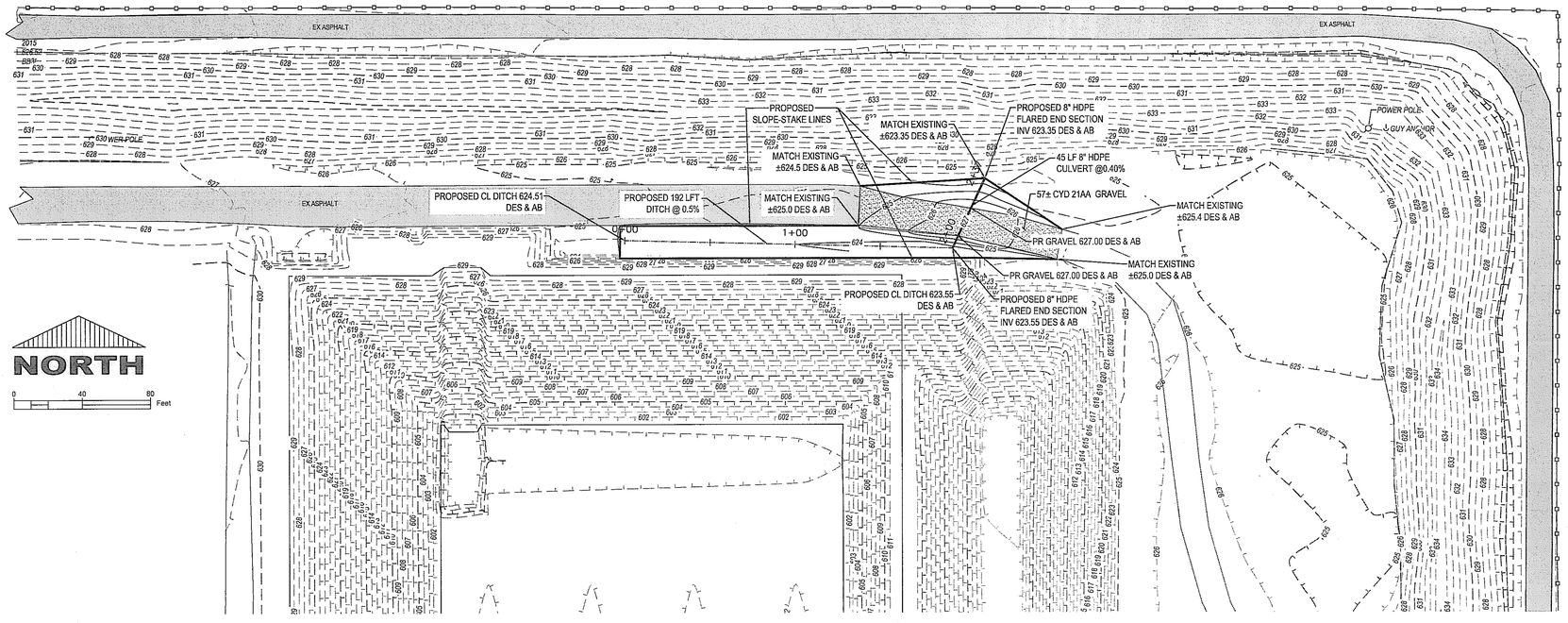

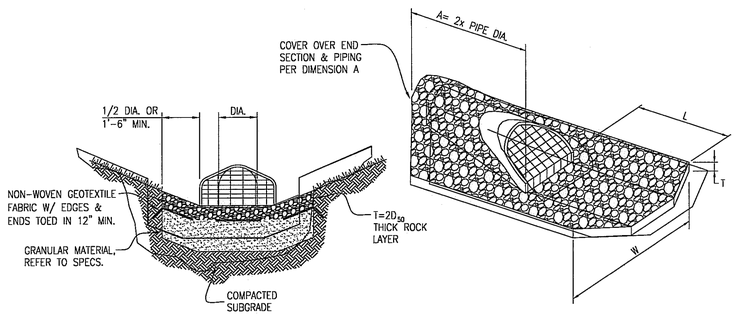

NOTES :	OUTLET PIPE DIA.	A	L (OUTLET)	E	W
1. STANDARD TRASH GRATE SHALL BE INCLUDED ON ALL CULVERT END SECTIONS.	12"	2'	5'	2'	6'
	15"	2.5'	5'	2'-6"	6'-6"
2. D_{50} = 9" FOR 24" & LARGER END	18"	3'	5'	3'	7'
D_{50} = 6" FOR 12" TO 21" END SECTIONS	24"	4'	20'	4'	8'
	30"	5'	25'	5'	9'
3. D = DIAMETER OF PIPE	36"	6'	30'	6'	10'

STORM SYSTEM CULVERT END SECTION W/ RIP-RAP

ST7

NOT TO SCALE

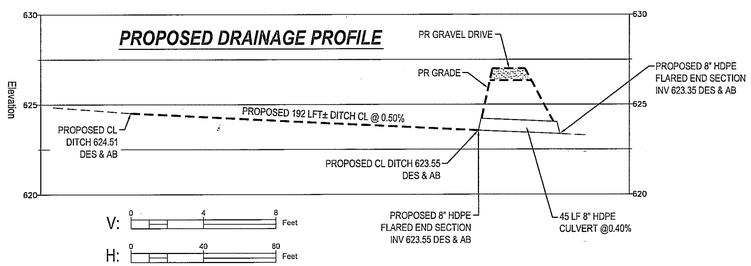

REV. MARK	REVISION	BY	CHK	APP	DATE

CONSULTANT

URS

URS CORPORATION
MIDLAND, MI
25 BUILDING, DOOR 1

URS PROJECT NUMBER: 41569617

DRAWING ISSUE RECORD

ISSUE NO.	REV	MATERIAL OR JOB SPEC	BID	FAB	CONST	REF
2	0	RECORD DRAWINGS				1/2015
1	A	FOR CONSTRUCTION			3/2014	

DATE ISSUED FOR

DESIGNED	URS CORPORATION	3/2014
DRAWN	URS CORPORATION	3/2014
CHECKED	URS CORPORATION	3/2014
APPROVED	J. DAVIS	3/2014
PROJ. ENGR.	J. DAVIS	3/2014
MFG. REP.	K. DETRICH	3/2014

STATUS | PLANT NO.

P.E. SEAL

DOW THE DOW CHEMICAL COMPANY

MICHIGAN OPERATIONS — MIDLAND, MICHIGAN

PROJECT — 3000 BLDG

SALZBURG LANDFILL
PHASE 1 - CELLS 23 THROUGH 28 PROJECT
NORTH CULVERT PLAN

PROJECT NUMBER	SCALE		REV.
119217	AS SHOWN	B2-032-119217	0

PRINTED — VER.

STATE OF MICHIGAN
MICHAEL J. STEPIC
ENGINEER
NO. 60457
LICENSED PROFESSIONAL ENGINEER

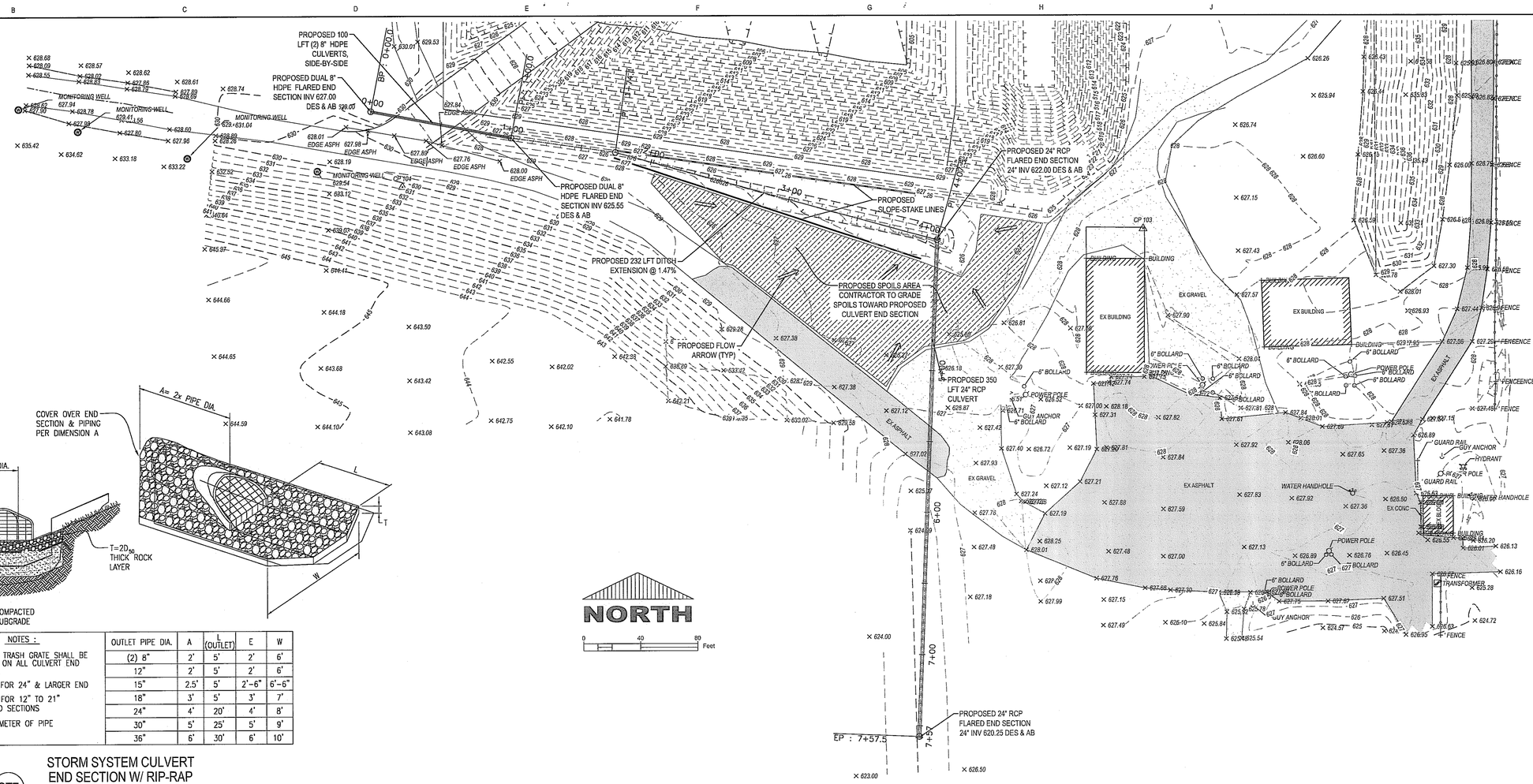

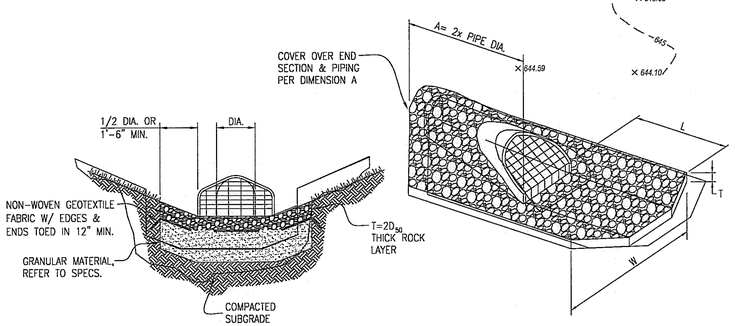

NOTES :

1. STANDARD TRASH GRATE SHALL BE INCLUDED ON ALL CULVERT END SECTIONS.
2. D_{50} = 9" FOR 24" & LARGER END
   D_{50} = 6" FOR 12" TO 21" END SECTIONS
3. D = DIAMETER OF PIPE

OUTLET PIPE DIA.	A	L (OUTLET)	E	W
(2) 8"	2'	5'	2'	6'
12"	2'	5'	2'	6'
15"	2.5'	5'	2'-6"	6'-6"
18"	3'	5'	3'	7'
24"	4'	20'	4'	8'
30"	5'	25'	5'	9'
36"	6'	30'	6'	10'

ST7 STORM SYSTEM CULVERT END SECTION W/ RIP-RAP

NOT TO SCALE

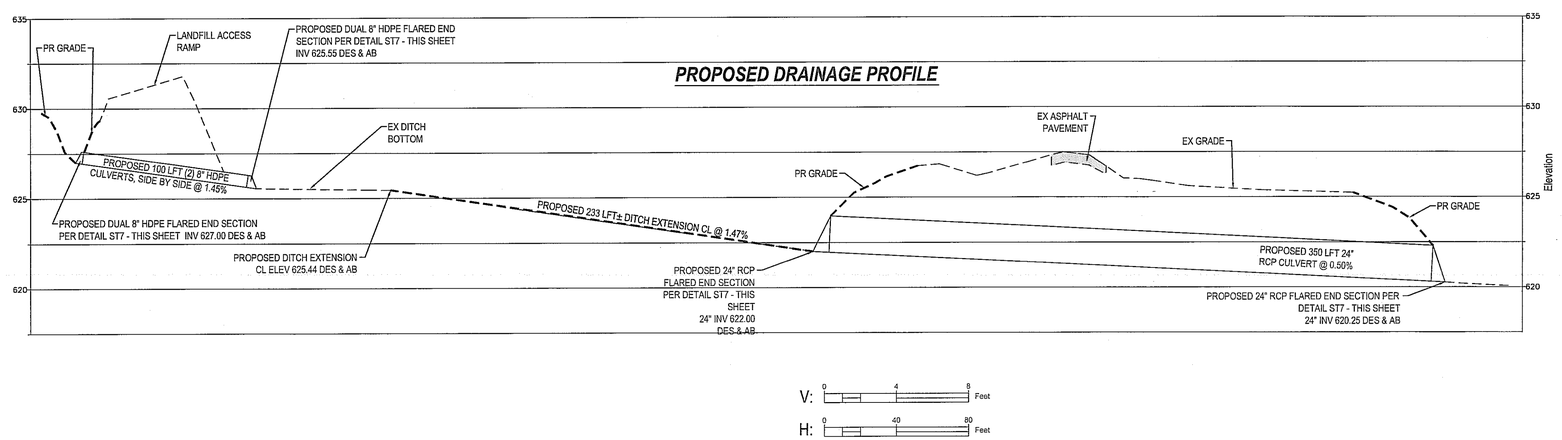

V: 0 4 8 Feet

H: 0 40 80 Feet

REV. MARK	REVISION	BY	CHK	APP	DATE

CONSULTANT

URS

URS CORPORATION
MIDLAND, MI
25 BUILDING, DOOR 1

URS PROJECT NUMBER: 41569617

DRAWING ISSUE RECORD

ISSUE NO.	REV	MATERIAL OR JOB SPEC	BID	FAB	CONST	REF
2	0	RECORD DRAWINGS				1/2015
1	A	FOR CONSTRUCTION			3/2014	

DATE ISSUED FOR

DESIGNED	URS CORPORATION	3/2014
DRAWN	URS CORPORATION	3/2014
CHECKED	URS CORPORATION	3/2014
APPROVED	J. DAVIS	3/2014
PROJ. ENGR.	J. DAVIS	3/2014
MFG. REP.	K. DETRICH	3/2014

STATUS | PLANT NO.

P.E. SEAL

DOW THE DOW CHEMICAL COMPANY

MICHIGAN OPERATIONS MIDLAND, MICHIGAN

PROJECT 3609 BLDG

SALZBURG LANDFILL
PHASE 1 - CELLS 23 THROUGH 28 PROJECT
SOUTH CULVERT PLAN

PROJECT NUMBER	SCALE		REV.
119217	AS SHOWN	B2-033-119217	0

PRINTED VER.

STATE OF MICHIGAN MICHAEL J. STEPIC ENGINEER NO. 60457 LICENSED PROFESSIONAL ENGINEER

SURFACE TO BE COVERED WITH MIN. 3-INCH LAYER OF ASPHALT

SURFACE TO BE COVERED WITH AN 8-INCH LAYER OF MDOT 23A CRUSHED STONE ATOP 6oz. NON-WOVEN GEOTEXTILE FABRIC

APPROX. 100' x 100' DUMP PAD

TOE OF SUBGRADE SLOPE

TOP OF EXCAVATION SLOPE

3606

T-1563

N

(IN FEET)
1 inch = 40 ft.

GRAPHIC SCALE

LEGEND

PROPOSED MINOR CONTOUR	619
PROPOSED MAJOR CONTOUR	620
EXISTING MINOR CONTOUR	619
EXISTING MAJOR CONTOUR	620

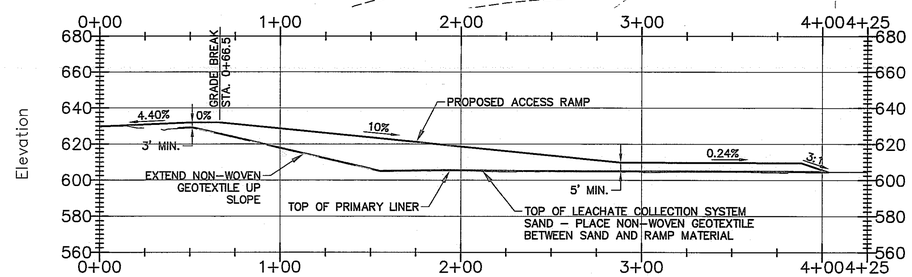

REV. MARK	REVISION	BY	CHK	APP	DATE

CONSULTANT

URS

URS CORPORATION
MIDLAND, MI
25 BUILDING, DOOR 1

URS PROJECT NUMBER: 41569617

DRAWING ISSUE RECORD

ISSUE NO.	REV	MATERIAL OR JOB SPEC	BID	FAB	CONST	REF
2	0	RECORD DRAWINGS				1/2015
1	A	FOR CONSTRUCTION			3/2014	

DATE ISSUED FOR

DESIGNED	URS CORPORATION	3/2014
DRAWN	URS CORPORATION	3/2014
CHECKED	URS CORPORATION	3/2014
APPROVED	J. DAVIS	3/2014
PROJ. ENGR.	J. DAVIS	3/2014
MFG. REP.	K. DETRICH	3/2014

STATUS | PLANT NO.

P.E. SEAL

DOW THE DOW CHEMICAL COMPANY

MICHIGAN OPERATIONS — MIDLAND, MICHIGAN

PROJECT — 3600 BLDG

SALZBURG LANDFILL
PHASE 1 - CELLS 23 THROUGH 28 PROJECT

OPERATIONAL ACCESS RAMP

PROJECT NUMBER	SCALE		REV.
119217	AS SHOWN	B2-034-119217	0

PRINTED | VER.

STATE OF MICHIGAN
MICHAEL J. STEPIC
ENGINEER
NO. 60457
LICENSED PROFESSIONAL ENGINEER

1/15

[redacted]

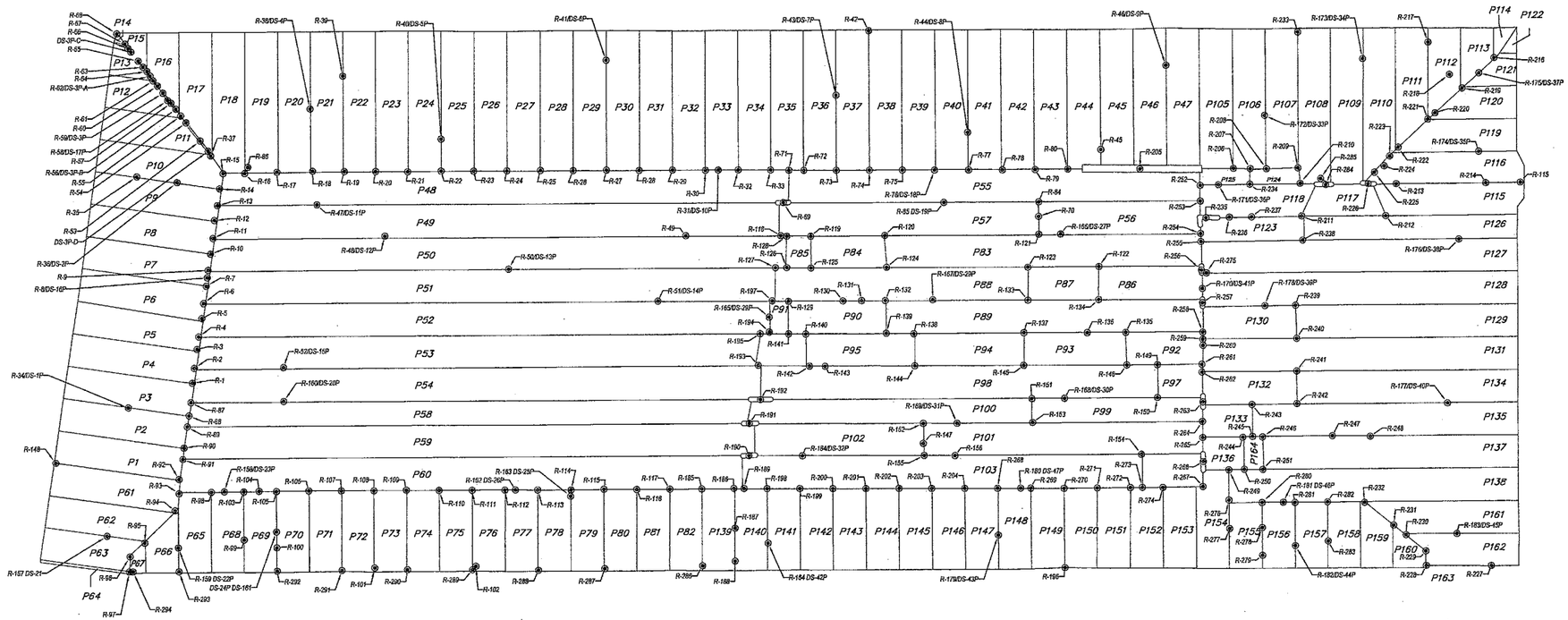

LEGEND

R-XXX = REPAIR
PXXX = PANEL
DS-XXX = DESTRUCTIVE TEST

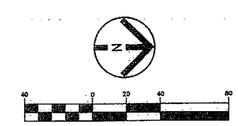

GRAPHIC SCALE

REV. MARK	REVISION	BY	CHK	APP	DATE

CONSULTANT

URS

URS CORPORATION
MIDLAND, MI
25 MAILING, DOOR 1

URS PROJECT NUMBER: 41599617

DRAWING ISSUE RECORD

ISSUE NO.	REV	MATERIAL OR JOB SPEC	IND	FAB	CONST	REF
2	0	RECORD DRAWINGS				1/2015
1	A	FOR CONSTRUCTION			3/2014	

DATE ISSUED FOR

DESIGNED	URS CORPORATION	3/2014
DRAWN	URS CORPORATION	3/2014
CHECKED	URS CORPORATION	3/2014
APPROVED	J. DAVIS	3/2014
PROJ. ENGR.	J. DAVIS	3/2014
MFG. REP.	K. DETRICH	3/2014

STATUS | PLANT NO.
P.E. SEAL

DOW THE DOW CHEMICAL COMPANY
MICHIGAN OPERATIONS — MIDLAND, MICHIGAN
PROJECT — 3600 BLDG

SALZBURG LANDFILL
PHASE 1 - CELLS 23 THROUGH 28 PROJECT
PRIMARY LINER ASBUILT CONDITIONS

PROJECT NUMBER	SCALE		REV.
119217	AS SHOWN	B2-035-119217	0

PRINTED | VER.

STATE OF MICHIGAN
MICHAEL J. STEPIC
ENGINEER
NO. 60457
LICENSED PROFESSIONAL ENGINEER

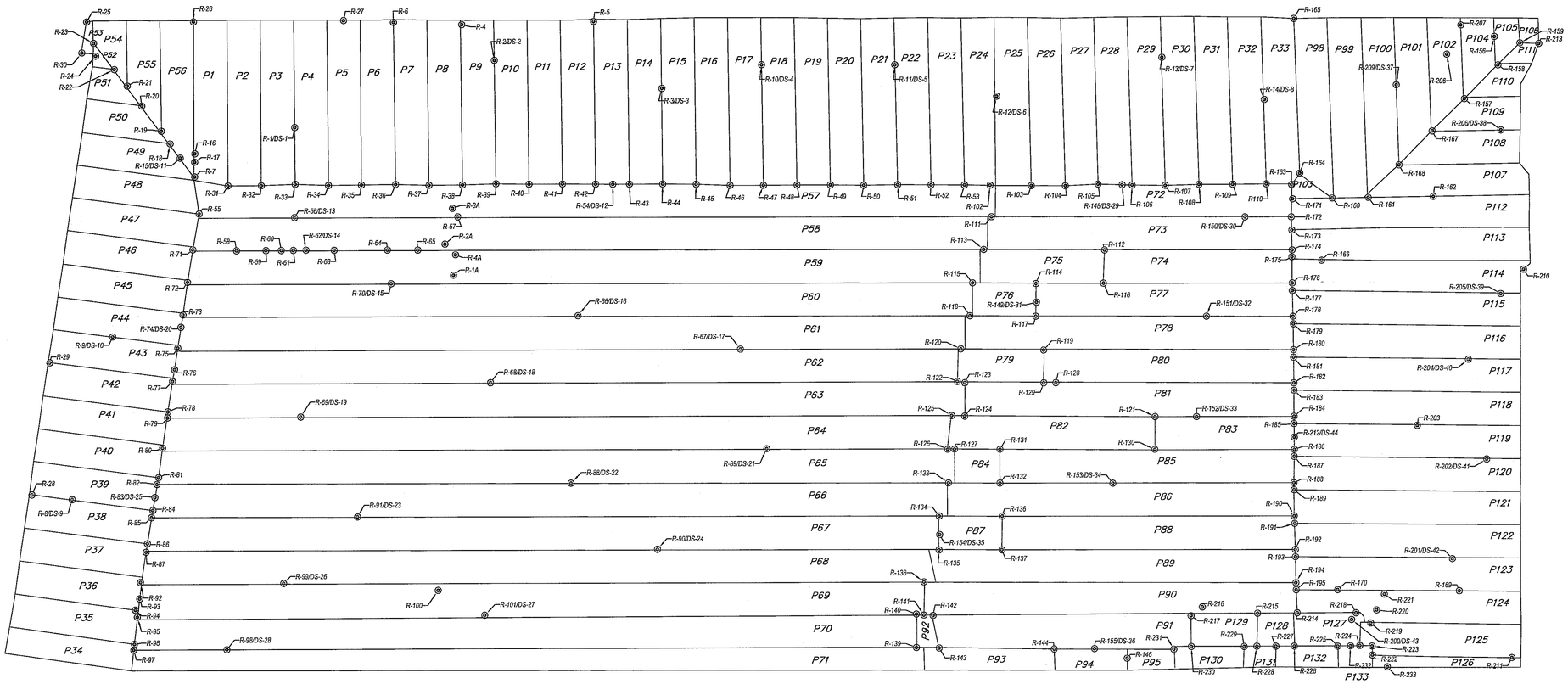

LEGEND

R-XXX = REPAIR
PXXX = PANEL
DS-XXX = DESTRUCTIVE TEST

N

40 0 20 40 80

(IN FEET)
1 inch = 40 ft.
GRAPHIC SCALE

REV. MARK	REVISION	BY	CHK	APP	DATE

CONSULTANT

URS

URS CORPORATION
MIDLAND, MI
28 BUILDING, DOOR 1

URS PROJECT NUMBER: 41569617

DRAWING ISSUE RECORD

ISSUE NO.	REV	MATERIAL OR JOB SPEC	BID	FAB	CONST	REF.
2	0	RECORD DRAWINGS				1/2015
1	A	FOR CONSTRUCTION			3/2014	

DATE ISSUED FOR

DESIGNED	URS CORPORATION	3/2014
DRAWN	URS CORPORATION	3/2014
CHECKED	URS CORPORATION	3/2014
APPROVED	J. DAVIS	3/2014
PROJ. ENGR.	J. DAVIS	3/2014
MFG. REP.	K. DETRICH	3/2014

STATUS
PLANT NO.
P.E. SEAL

DOW THE DOW CHEMICAL COMPANY

MICHIGAN OPERATIONS — MIDLAND, MICHIGAN

PROJECT — 3550 BLDG

SALZBURG LANDFILL
PHASE 1 - CELLS 23 THROUGH 28 PROJECT
SECONDARY LINER ASBUILT CONDITIONS

PROJECT NUMBER	SCALE		REV.
119217	AS SHOWN	B2-036-119217	0

PRINTED
VER.

STATE OF MICHIGAN
MICHAEL J. STEPIC
ENGINEER
NO. 60457
LICENSED PROFESSIONAL ENGINEER

NOTES:

1. SEE ELECTRICAL DRAWINGS FOR ELECTRICAL SYSTEM INFORMATION.
2. SEE B2-104 FOR METER RUN DETAILS & CONNECTION TO GRAVITY SEWER
3. SEE B2-026, B2-102 & B2-103 FOR SIDE SLOPE LS RISER PIPE DETAILS
4. ALL STAINLESS STEEL PIPE, FITTINGS, FLANGES, ETC. TO BE FURNISHED BY CONTRACTOR.
5. METERS & VALVES TO BE FURNISHED BY DOW
6. SLOPE PIPES TOWARD LEAK DETECTION PORT

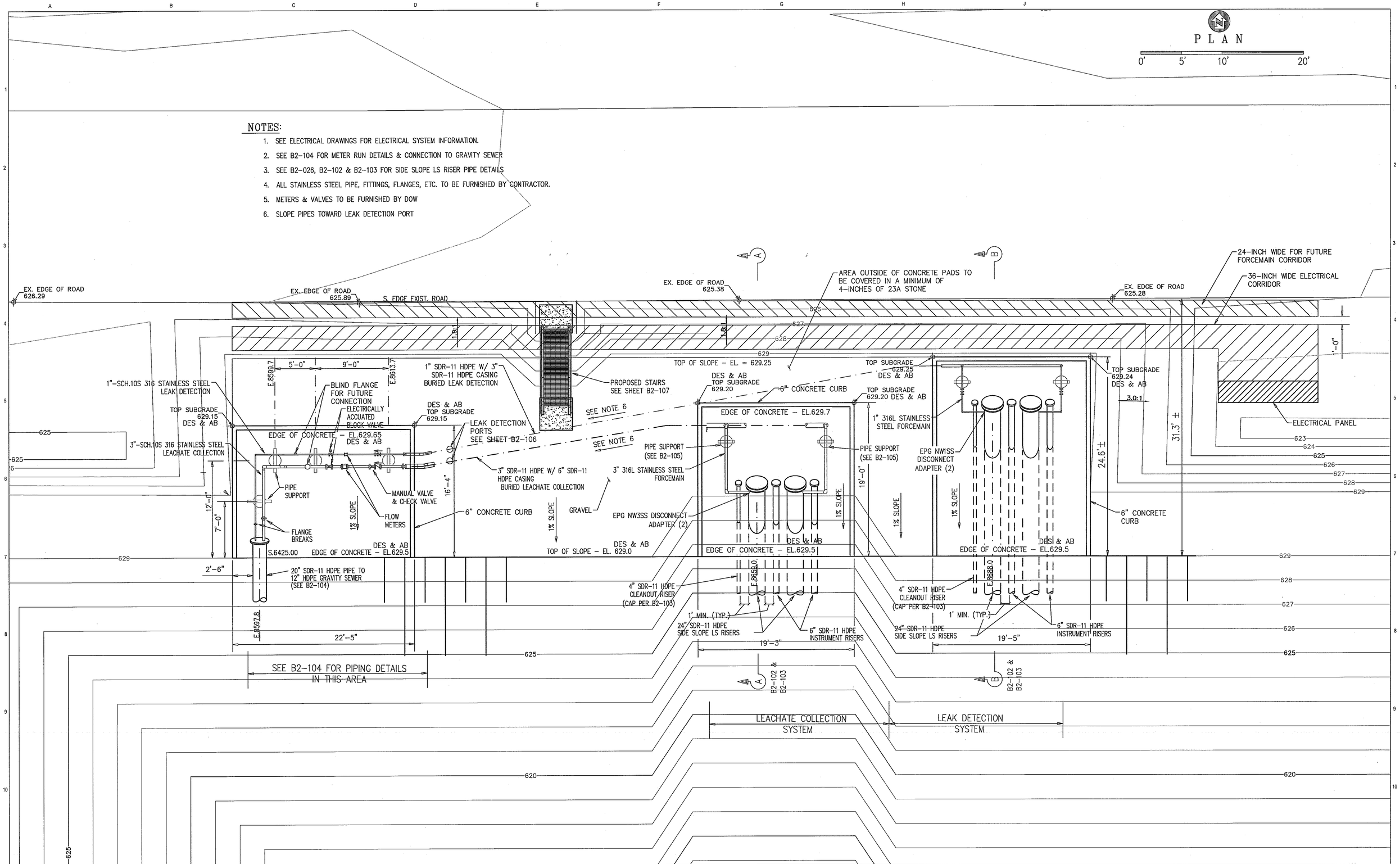

REV. MARK	REVISION	BY	CHK	APP	DATE
A	ADDED SHEETS B2-032 THRU B2-035				

CONSULTANT

URS

URS CORPORATION
MIDLAND, MI
25 BUILDING, DCOR 1

URS PROJECT NUMBER: 41569617

DRAWING ISSUE RECORD

ISSUE NO.	REV	MATERIAL OR JOB SPEC	BID	FAB	CONST	REF
2	0	RECORD DRAWINGS				1/2015
1	A	FOR CONSTRUCTION			3/2014	

DATE ISSUED FOR

DESIGNED	URS CORPORATION	6/2008
DRAWN	URS CORPORATION	6/2008
CHECKED	URS CORPORATION	6/2008
APPROVED	J. ALLEN	6/2008
PROJ. ENGR.	J. ALLEN	6/2008
MFG. REP.	K. DETRICH	6/2008

STATUS | PLANT NO.

P.E. SEAL

DOW THE DOW CHEMICAL COMPANY

MICHIGAN OPERATIONS — MIDLAND, MICHIGAN

PROJECT — 3000 BLDG

SALZBURG LANDFILL
PHASE 1 - CELLS 23 THROUGH 28 PROJECT
SIDE SLOPE LIFT STATIONS
LS DISCHARGE PIPING AND CONDUIT PLAN

PROJECT NUMBER	SCALE		REV.
119217	AS SHOWN	B2-101-119217	0

PRINTED | VER.

STATE OF MICHIGAN
MICHAEL J. STEPIC
ENGINEER
NO. 60457
LICENSED PROFESSIONAL ENGINEER

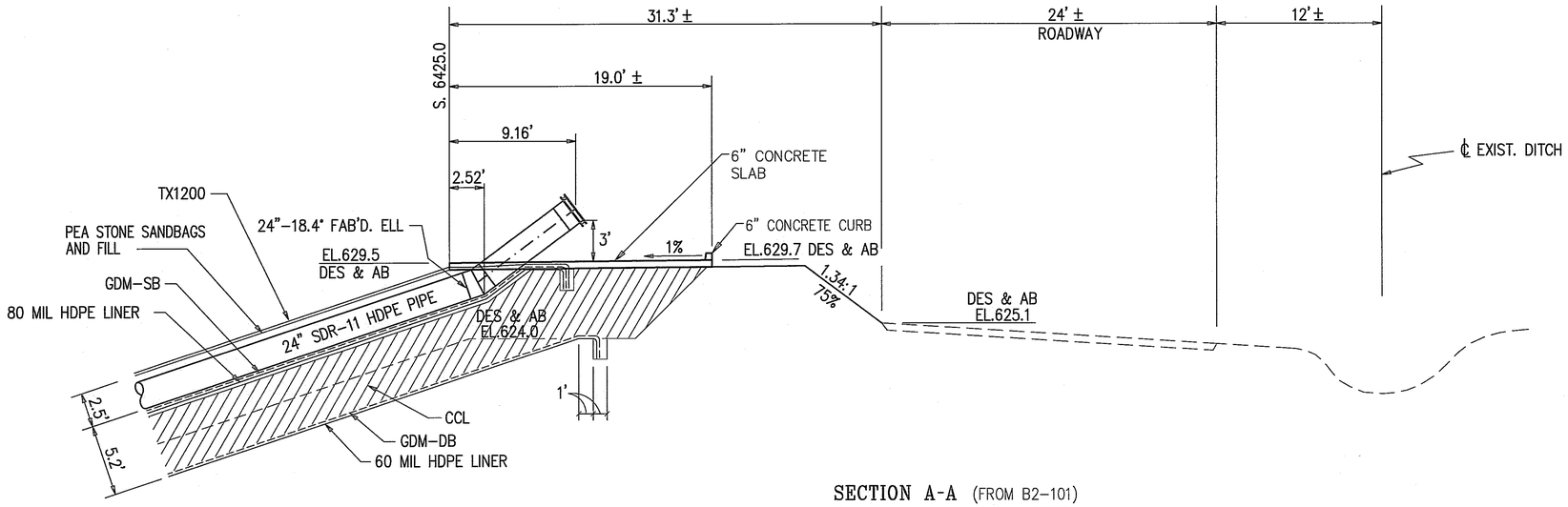

SECTION A-A (FROM B2–101)

0' 5' 10' 20'

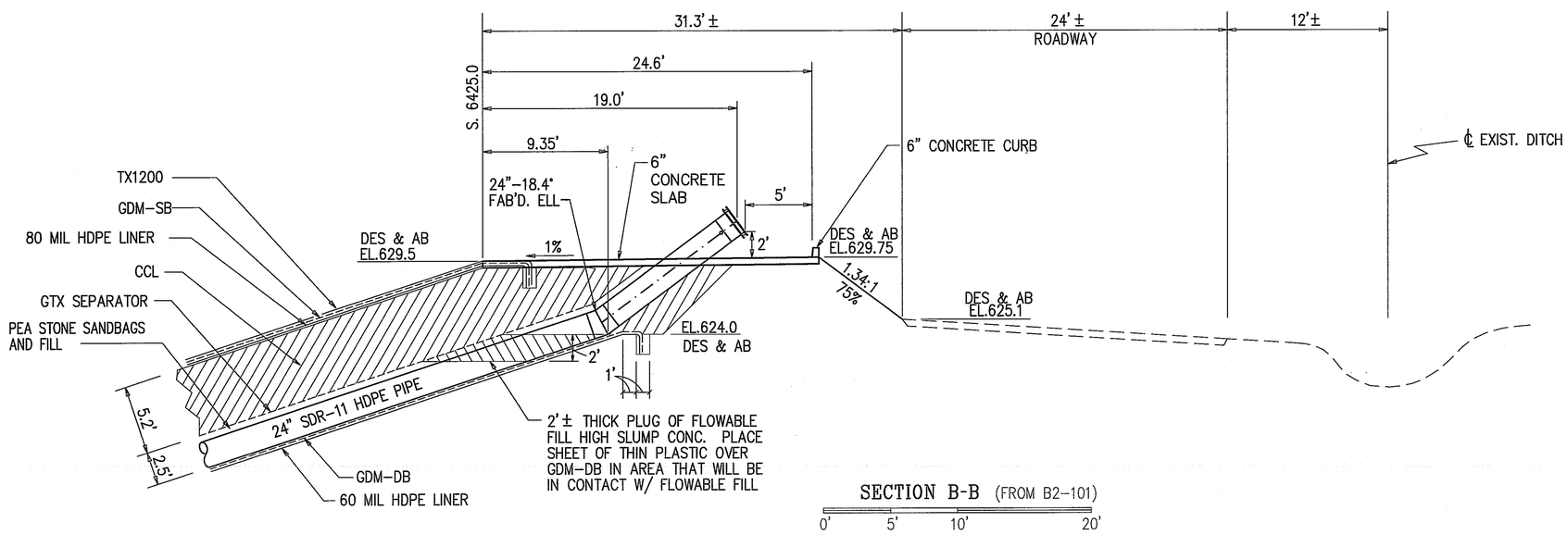

SECTION B-B (FROM B2–101)

0' 5' 10' 20'

REV. MARK	REVISION	BY	CHK	APP	DATE
A	ADDED SHEETS B2-032 THRU B2-036				

CONSULTANT

URS

URS CORPORATION
MIDLAND, MI
25 BUILDING, DOOR 1

URS PROJECT NUMBER: 41589617

DRAWING ISSUE RECORD

ISSUE NO.	REV	MATERIAL OR JOB SPEC	BID	FAB	CONST	REF
2	0	RECORD DRAWINGS				1/2015
1	A	FOR CONSTRUCTION			3/2014	

DATE ISSUED FOR

DESIGNED	URS CORPORATION	6/2008
DRAWN	URS CORPORATION	6/2008
CHECKED	URS CORPORATION	6/2008
APPROVED	J. ALLEN	6/2008
PROJ. ENGR.	J. ALLEN	6/2008
MFG. REP.	K. DETRICH	6/2008

STATUS | PLANT NO.

P.E. SEAL

DOW THE DOW CHEMICAL COMPANY

MICHIGAN OPERATIONS — MIDLAND, MICHIGAN

PROJECT — 3600 BLDG

SALZBURG LANDFILL
PHASE 1 - CELLS 23 THROUGH 28 PROJECT
SIDE SLOPE LIFT STATIONS
LS DISCHARGE PIPE SECTIONS

PROJECT NUMBER	SCALE		REV.
119217	AS SHOWN	B2-102-119217	0

PRINTED | VER.

STATE OF MICHIGAN
MICHAEL J. STEPIC
ENGINEER
NO. 60457
LICENSED PROFESSIONAL ENGINEER
7-28-15

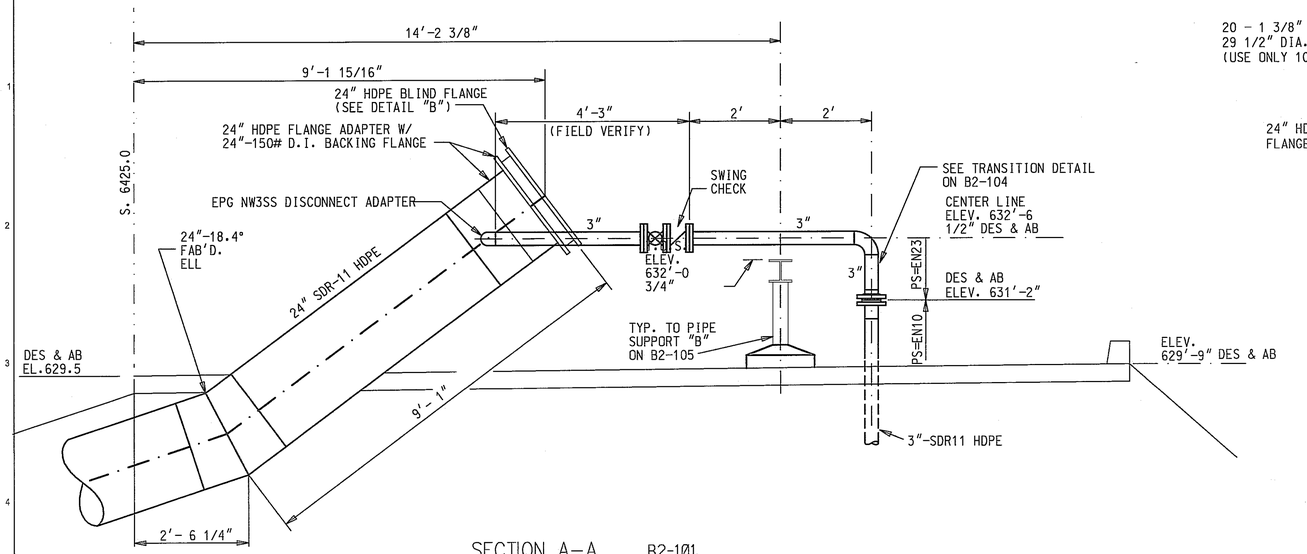

SECTION A-A B2-101

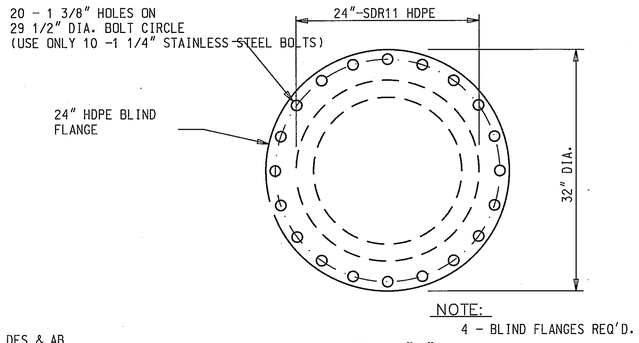

NOTE:
4 - BLIND FLANGES REQ'D.

DETAIL "B"

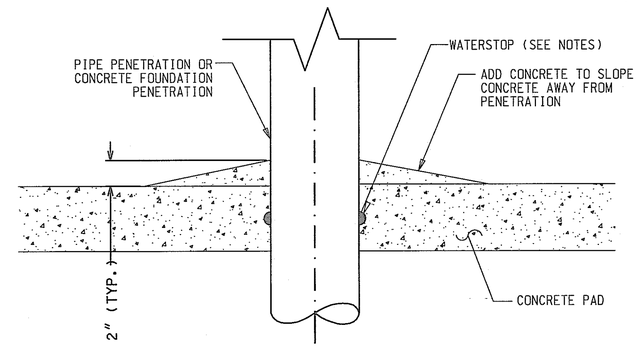

CONCRETE PENETRATION DETAIL

NOTE:
1. WATERSTOP TO BE WATERSTOP-RX 102 FROM CETCO AND INSTALLED PER THE MANUFACTURER'S RECOMMENDATIONS.
2. A MINIMUM OF 2-INCHES OF CONCRETE TO BE MAINTAINED ABOVE AND BELOW THE WATERSTOP.

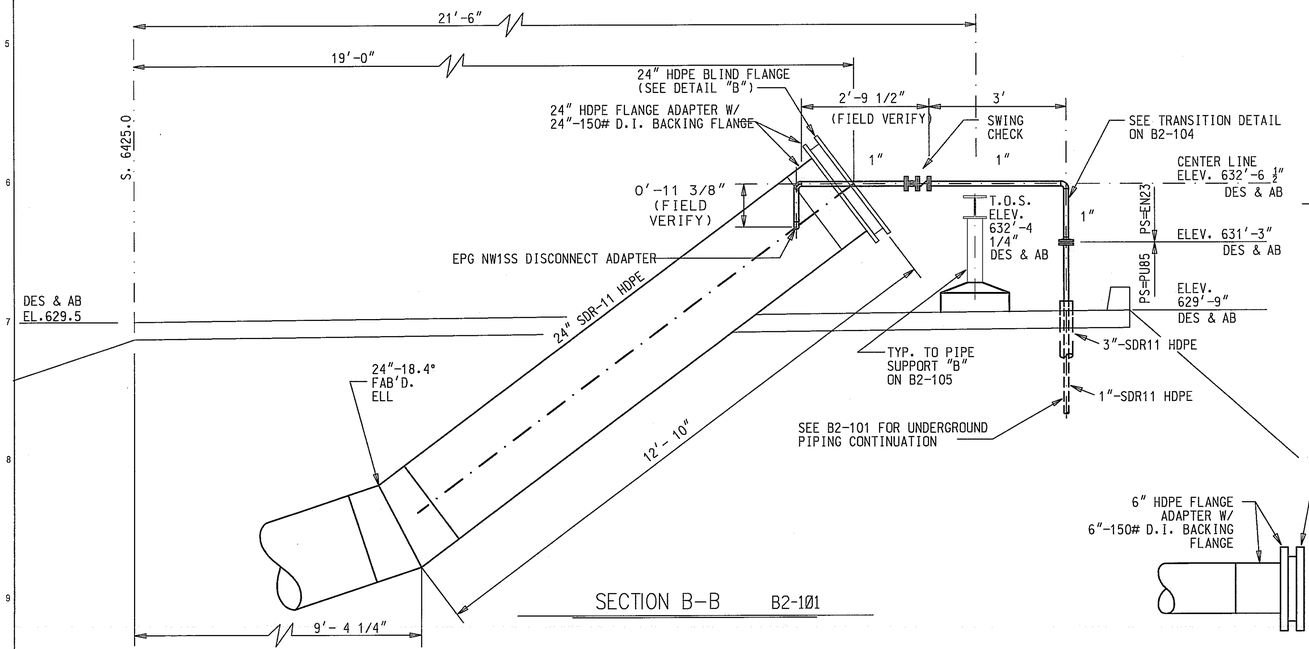

SECTION B-B B2-101

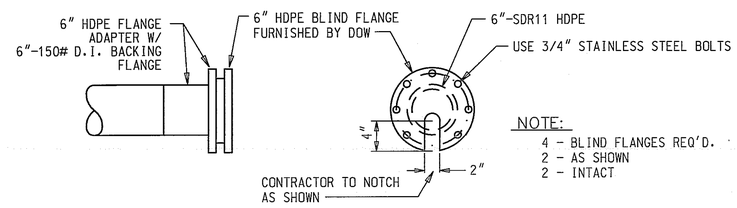

NOTE:
4 - BLIND FLANGES REQ'D.
2 - AS SHOWN
2 - INTACT

BLIND FLANG DETAIL FOR INSTRUMENT RISERS

NOTE:
4" HDPE C.O. RISERS TO BE CAPPED OFF W/ 4" HDPE BLIND FLANGE & FLANGE ADAPTER W/ D.I. BACKING FLANGE (TYP. 2 PLACES)

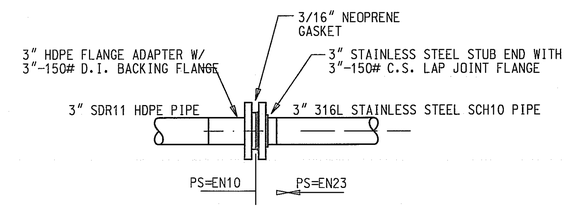

TYPICAL STAINLESS STEEL TO HDPE PIPE CONNECTION

NOTE:
1" CONNECTION SIMILAR CONFIGURATION AS ABOVE BUT SUBSTITUTE 1" PIPE FITTINGS.

REV. MARK	REVISION	BY	CHK	APP	DATE
A	ADDED SHEETS B2-032 THRU B2-036				

CONSULTANT

URS

URS CORPORATION
MIDLAND, MI
25 BUILDING, DOOR 1

URS PROJECT NUMBER: 41569617

DRAWING ISSUE RECORD

ISSUE NO.	REV	MATERIAL OR JOB SPEC	BID	FAB	CONST	REF
2	0	RECORD DRAWINGS				1/2015
1	A	FOR CONSTRUCTION			3/2014	

DATE ISSUED FOR

DESIGNED	URS CORPORATION	6/2008
DRAWN	URS CORPORATION	6/2008
CHECKED	URS CORPORATION	6/2008
APPROVED	J. ALLEN	6/2008
PROJ. ENGR.	J. ALLEN	6/2008
MFG. REP.	K. DETRICH	6/2008

STATUS | PLANT NO.
P.E. SEAL

DOW THE DOW CHEMICAL COMPANY
MICHIGAN OPERATIONS — MIDLAND, MICHIGAN
PROJECT — 3600 BLDG

SALZBURG LANDFILL
PHASE 1 - CELLS 23 THROUGH 28 PROJECT
SIDE SLOPE LIFT STATIONS
LS ABOVE GRD. DISCHARGE PIPING DETAILS

PROJECT NUMBER	SCALE		REV.
119217	AS SHOWN	B2-103-119217	0

PRINTED | VER.

STATE OF MICHIGAN
MICHAEL J. STEPIC
ENGINEER NO. 60457
LICENSED PROFESSIONAL ENGINEER

NOTE:

1. FOR 1" RISERS USE SIMILAR CONFIGRATION WITH 1" PIPE FITTINGS.

LEGEND:

PS = PIPE SPECIFICATION
PU85 = HDPE SDR-11 PIPE
EN23 = 316L STAINLESS STEEL SCH10 PIPE

NOTE:

ALL METERS AND VALVES TO BE SUPPLIED BY DOW

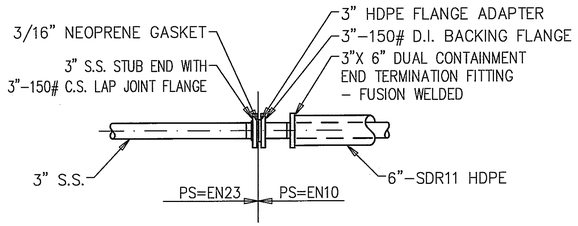

3" HDPE TO 3" STAINLESS STEEL TRANSITION DETAIL

TYPICAL 3(3") RISER & (3)1" RISER LOCATIONS

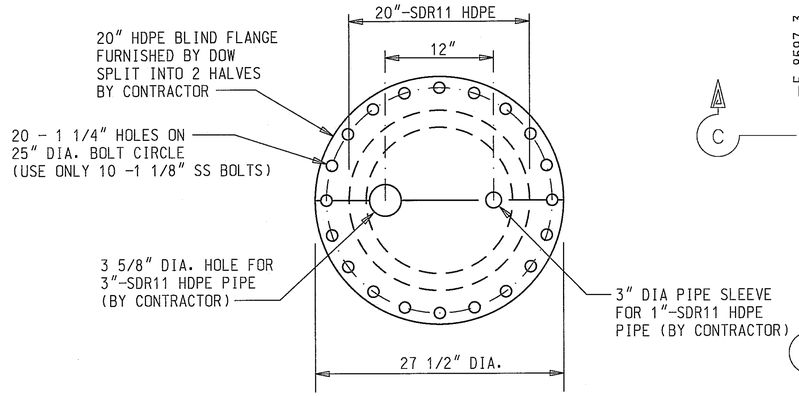

DETAIL "A"

SEE SECTION D-D

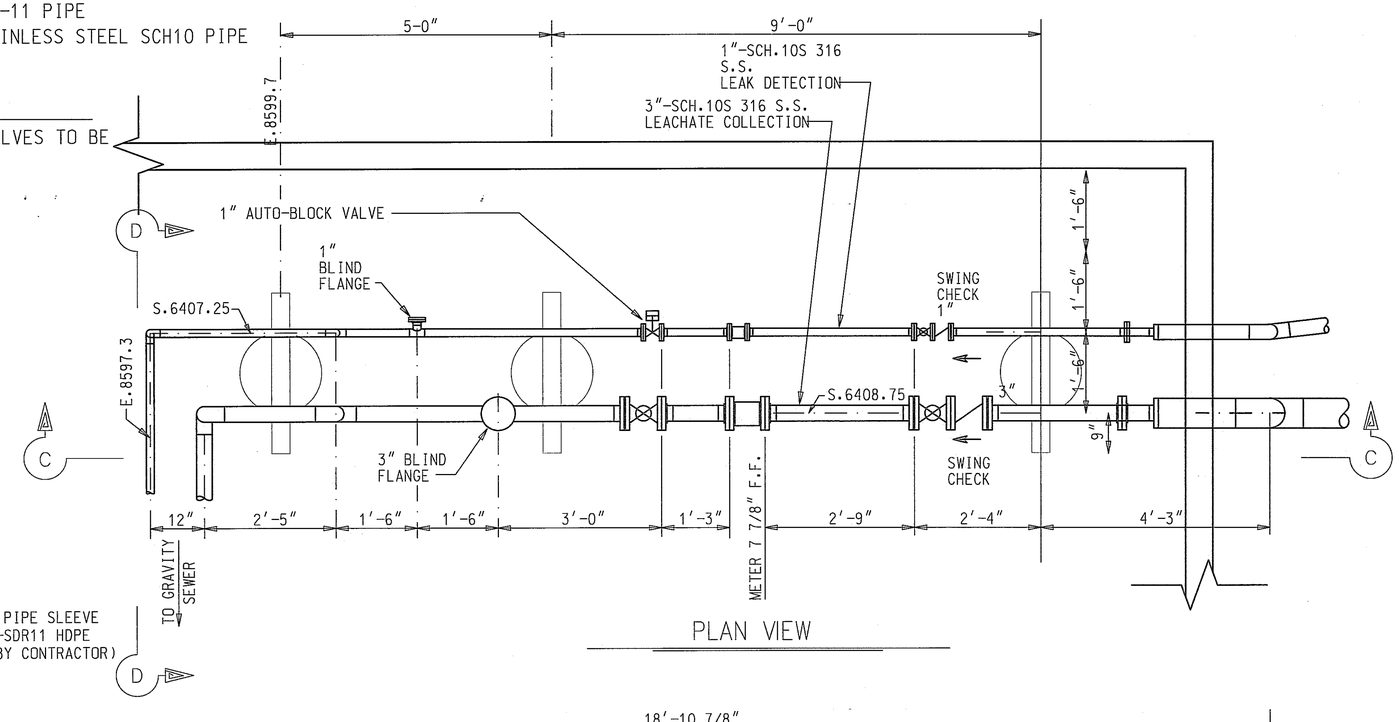

PLAN VIEW

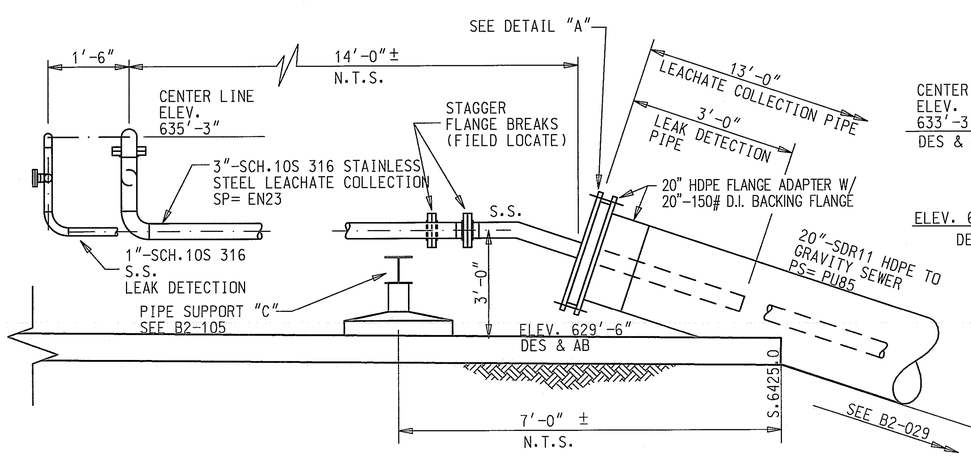

SECTION D-D

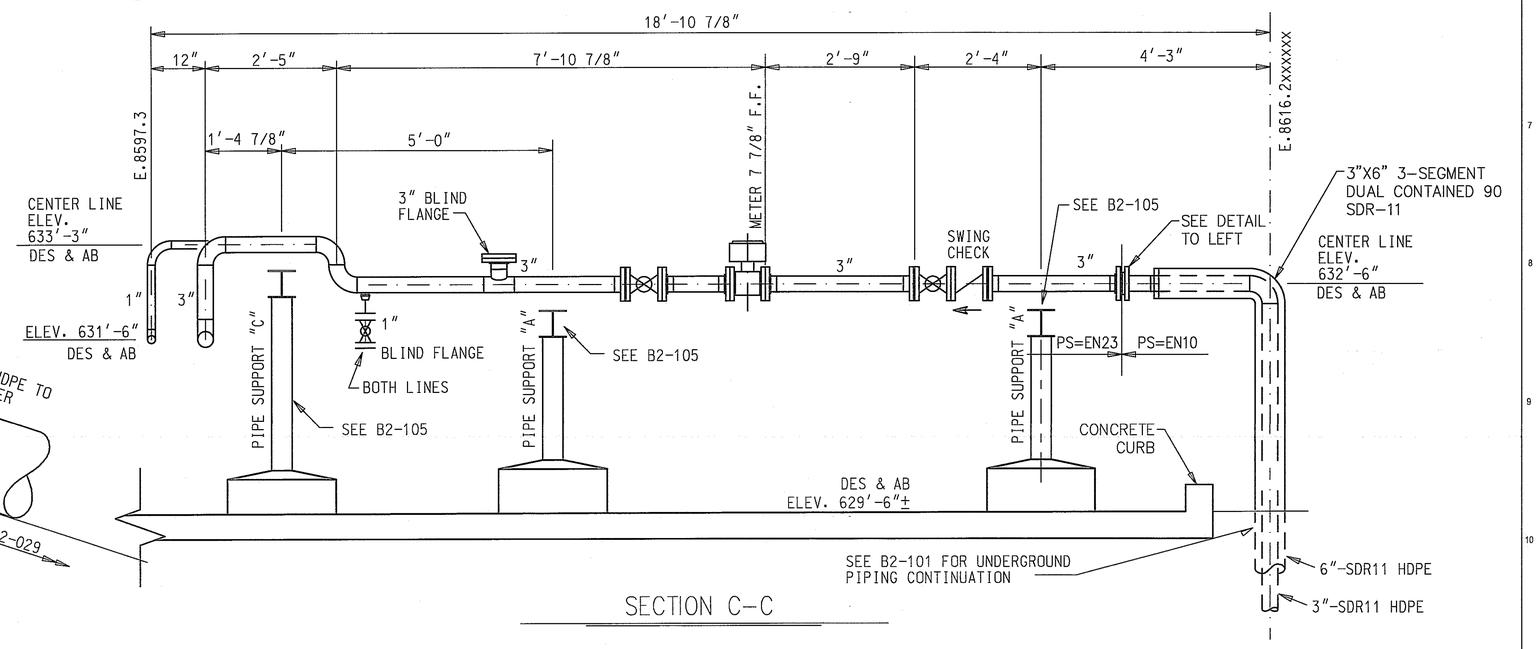

SECTION C-C

REV. MARK	REVISION	BY	CHK	APP	DATE
A	ADDED SHEETS B2-032 THRU B2-036				

CONSULTANT

URS

URS CORPORATION
MIDLAND, MI
25 BUILDING, DOOR 1

URS PROJECT NUMBER: 41569617

DRAWING ISSUE RECORD

ISSUE NO.	REV	MATERIAL OR JOB SPEC	B/D	FAB	CONST	REF
2	0	RECORD DRAWINGS				1/2015
1	A	FOR CONSTRUCTION			3/2014	

DATE ISSUED FOR

DESIGNED	URS CORPORATION	6/2008
DRAWN	URS CORPORATION	6/2008
CHECKED	URS CORPORATION	6/2008
APPROVED	J. ALLEN	6/2008
PROJ. ENGR.	J. ALLEN	6/2008
MFG. REP.	K. DETRICH	6/2008

STATUS | PLANT NO.

P.E. SEAL

DOW THE DOW CHEMICAL COMPANY

MICHIGAN OPERATIONS — MIDLAND, MICHIGAN

PROJECT: SALZBURG LANDFILL
PHASE 1 - CELLS 23 THROUGH 28 PROJECT
SIDE SLOPE LIFT STATIONS
LS DISCHARGE PIPING METER RUN

3609 BLDG

PROJECT NUMBER	SCALE		REV.
119217	AS SHOWN	B2-104-119217	0

PRINTED | VER.

STATE OF MICHIGAN — MICHAEL J. STEPIC ENGINEER NO. 60457 — LICENSED PROFESSIONAL ENGINEER

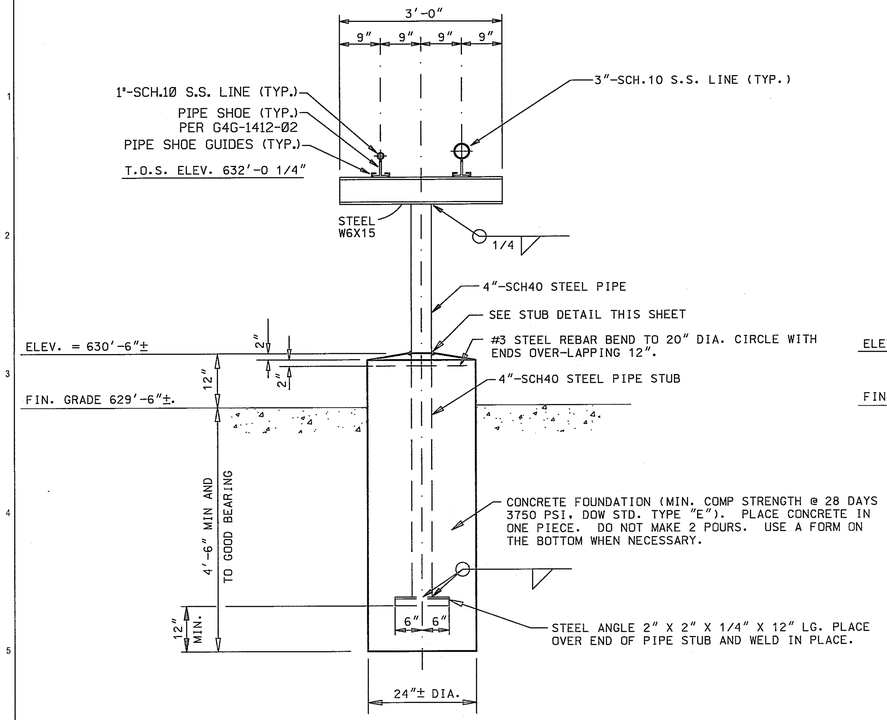

PIPE SUPPORT "A"

(LOOKING EAST) (SEE B2-104)

SCALE: 3/4" = 1'-0"

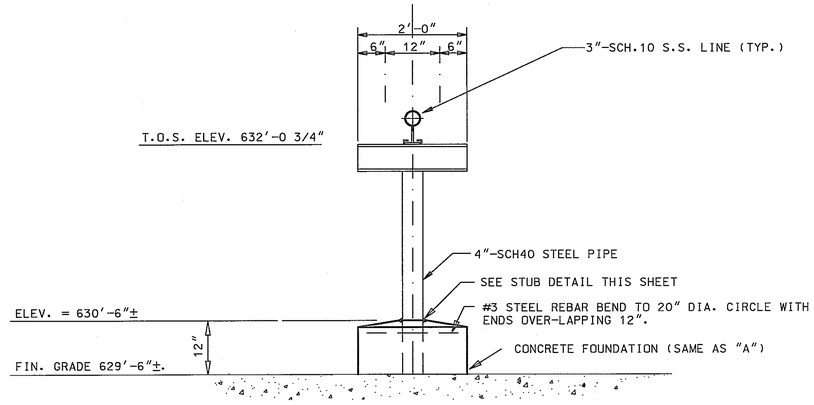

PIPE SUPPORT "B"

(LOOKING EAST) (SEE B2-104)

SCALE: 3/4" = 1'-0"

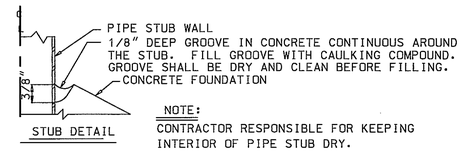

NOTE:
CONTRACTOR RESPONSIBLE FOR KEEPING INTERIOR OF PIPE STUB DRY.

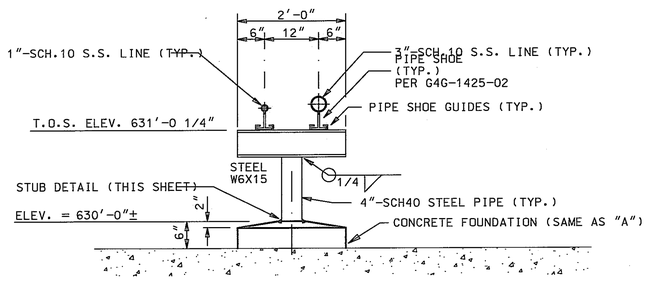

PIPE SUPPORT "C"

(LOOKING NORTH) (SEE B2-101 & B2-104)

SCALE: 3/4" = 1'-0"

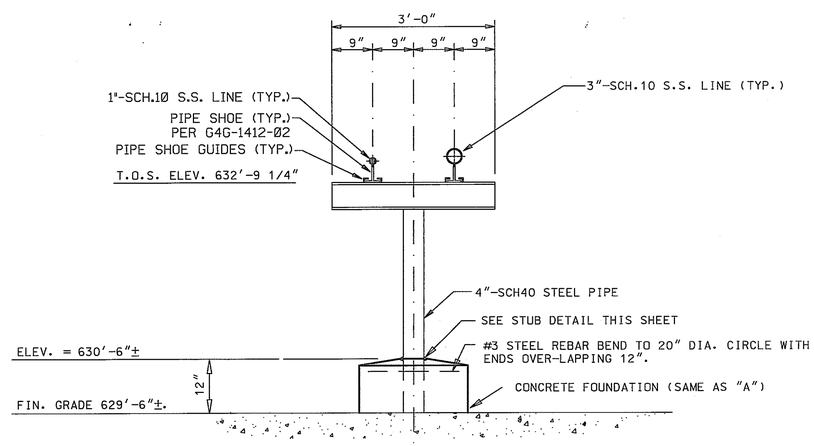

PIPE SUPPORT "D"

(LOOKING EAST) (SEE B2-104)

SCALE: 3/4" = 1'-0"

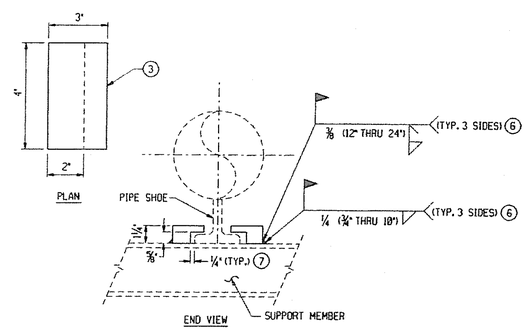

NOTES:

1. SURFACE FINISH HOT DIP GALVANIZED UNLESS OTHERWISE SPECIFIED IN THE TECHNICAL JOB INSTRUCTIONS.
2. INSTALL GUIDE CENTERED OVER THE SUPPORT MEMBER UNLESS OTHERWISE NOTED.
3. MATERIAL TO BE ASTM A-285,GR.C. MAY BE MACHINED FROM A SINGLE PIECE OF STOCK OR, AT INSTALLER'S OPTION, MAY BE FABRICATED FROM TWO PIECES OF PLATE MATERIAL WELDED TOGETHER.
4. BREAK ALL SHARP EDGES.
5. ANY DAMAGE TO EXISTING SUPPORT MEMBERS SHALL BE REPAIRED BY INSTALLER.
6. DO NOT WELD SHOE SIDE TO GUIDE.
7. UNLESS NOTED OTHERWISE IN ON PIPING DRAWING.

WELDED PIPE SHOE GUIDE
PIPE SIZES 3/4" THRU 24"

G4G-1425-02

REV. MARK	REVISION	BY	CHK	APP	DATE
A	ADDED SHEETS B2-032 THRU B2-035				

CONSULTANT

URS

URS CORPORATION
MIDLAND, MI
25 BUILDING, DOOR 1

URS PROJECT NUMBER: 41569617

DRAWING ISSUE RECORD

ISSUE NO.	REV	MATERIAL OR JOB SPEC	BID	FAB	CONST	REF
2	0	RECORD DRAWINGS				1/2015
1	A	FOR CONSTRUCTION			3/2014	

DATE ISSUED FOR

DESIGNED	URS CORPORATION	6/2008
DRAWN	URS CORPORATION	6/2008
CHECKED	URS CORPORATION	6/2008
APPROVED	J. ALLEN	6/2008
PROJ. ENGR.	J. ALLEN	6/2008
MFG. REP.	K. DETRICH	6/2008

STATUS
P.E. SEAL
PLANT NO.

DOW THE DOW CHEMICAL COMPANY
MICHIGAN OPERATIONS MIDLAND, MICHIGAN
PROJECT 3600 BLDG
SALZBURG LANDFILL
PHASE 1 - CELLS 23 THROUGH 28 PROJECT
SIDE SLOPE LIFT STATIONS
LS PIPE SUPPORT DETAILS

PROJECT NUMBER	SCALE	REV.
119217	AS SHOWN	0

B2-105-119217

PRINTED VER.

STATE OF MICHIGAN
MICHAEL J. STEPIC
ENGINEER
NO. 60457
LICENSED PROFESSIONAL ENGINEER

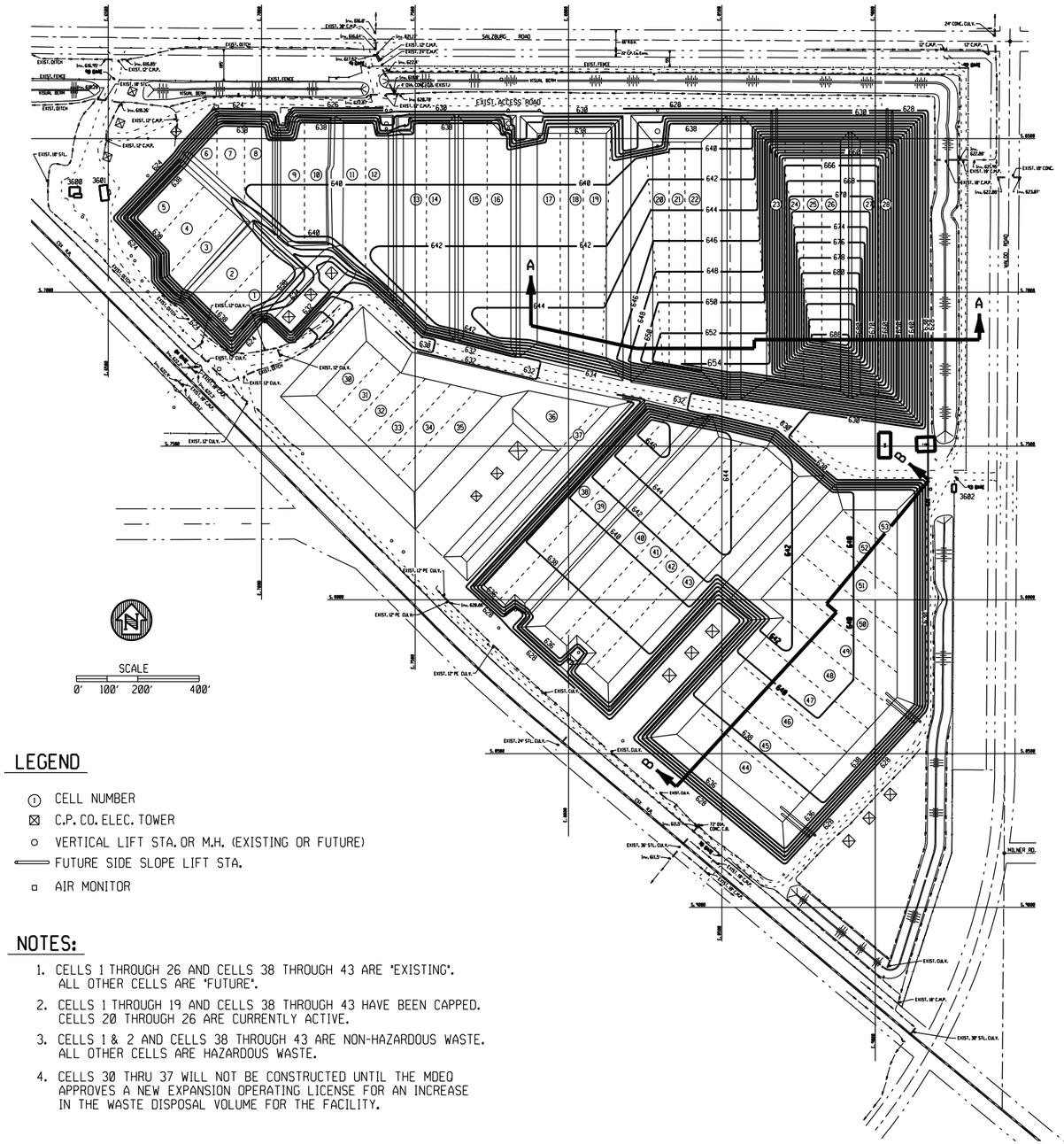

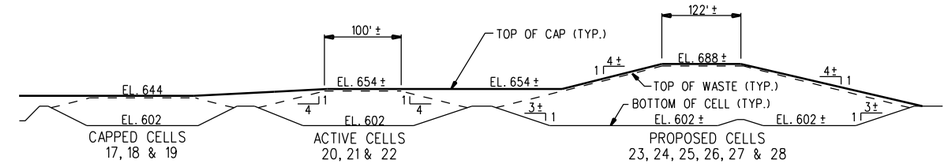

SECTION A-A (LOOKING NORTH)

NO SCALE

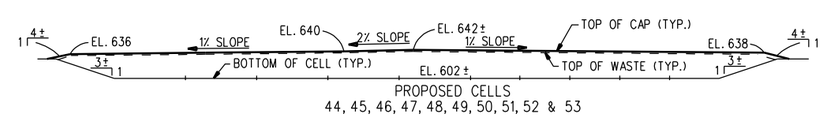

SECTION B-B (LOOKING NORTHWEST)

NO SCALE

LEGEND

- ① CELL NUMBER
- ⊠ C.P. CO. ELEC. TOWER
- ○ VERTICAL LIFT STA. OR M.H. (EXISTING OR FUTURE)
- FUTURE SIDE SLOPE LIFT STA.
- ▫ AIR MONITOR

NOTES:

1. CELLS 1 THROUGH 26 AND CELLS 38 THROUGH 43 ARE "EXISTING". ALL OTHER CELLS ARE "FUTURE".
2. CELLS 1 THROUGH 19 AND CELLS 38 THROUGH 43 HAVE BEEN CAPPED. CELLS 20 THROUGH 26 ARE CURRENTLY ACTIVE.
3. CELLS 1 & 2 AND CELLS 38 THROUGH 43 ARE NON-HAZARDOUS WASTE. ALL OTHER CELLS ARE HAZARDOUS WASTE.
4. CELLS 30 THRU 37 WILL NOT BE CONSTRUCTED UNTIL THE MDEQ APPROVES A NEW EXPANSION OPERATING LICENSE FOR AN INCREASE IN THE WASTE DISPOSAL VOLUME FOR THE FACILITY.

REV. MARK	REVISION	BY	CHK	APP	DATE
A	REVISED CONFIGURATION OF CAPS FOR CELLS 23 THRU 28 AND CELLS 44 THRU 53	LEG	JJA	JJA	2/08
B	REVISED TO NOTE CELLS 30 THRU 37 WILL NOT BE BUILT UNTIL CONSTRUCTION PERMIT VOLUME MOD IS APPROVED. ALSO REVISED CELLS 44 THRU 53 CAP ELEVS SO ACTUAL STORAGE VOLUME EQUALS CURRENT LICENSE VOLUME.	LEG	JJA	JJA	9/08
C	REVISED NOTE 1 - REPLACE THE NUMBER "22" WITH "26"	HG			6/15
D	REVISED NOTE 2-CHANGED THE SECOND SENTENCE TO READ "CELLS 20 THROUGH 26 ARE CURRENTLY ACTIVE"	HG			6/15
E	REVISED NOTE 4-REPLACED THE WORDS "CONSTRUCTION PERMIT MODIFICATION" TO "NEW EXPANSION OPERATING LICENSE"	HG			6/15

DRAWING ISSUE RECORD

ISSUE NO.	REV	MATERIAL OR JOB SPEC	BID	FAB	CONST	REF
			DATE ISSUED FOR			

DESIGNED	J.J. ALLEN	11/05
DRAWN	L.E. GIRARDIN	11/05
CHECKED	J.J.A.	11/05
APPROVED	J.J.A.	11/05
PROJ. ENGR.	J.J. ALLEN	11/05
MFG. REP.	STEVE LUCAS	11/05

STATUS | PLANT NO. | P.E. SEAL

THE DOW CHEMICAL COMPANY

MICHIGAN DIVISION — MIDLAND, MICHIGAN

SALZBURG LANDFILL — 3600 BLDG.

EXISTING & FUTURE CAPPING LAYOUT

EJN NUMBER	SCALE		REV.
114291	1" = 200'-0"	B2-002-1374	E

2 PLN

PRINTED | VER.

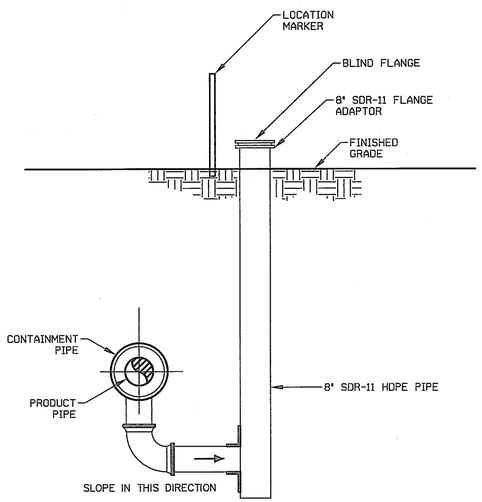

LOW POINT LEAK DETECTION (TYP.)

NOT TO SCALE

NOTE: EXTEND LEAK DETECTION STAND PIPE OUT OF THE ROAD

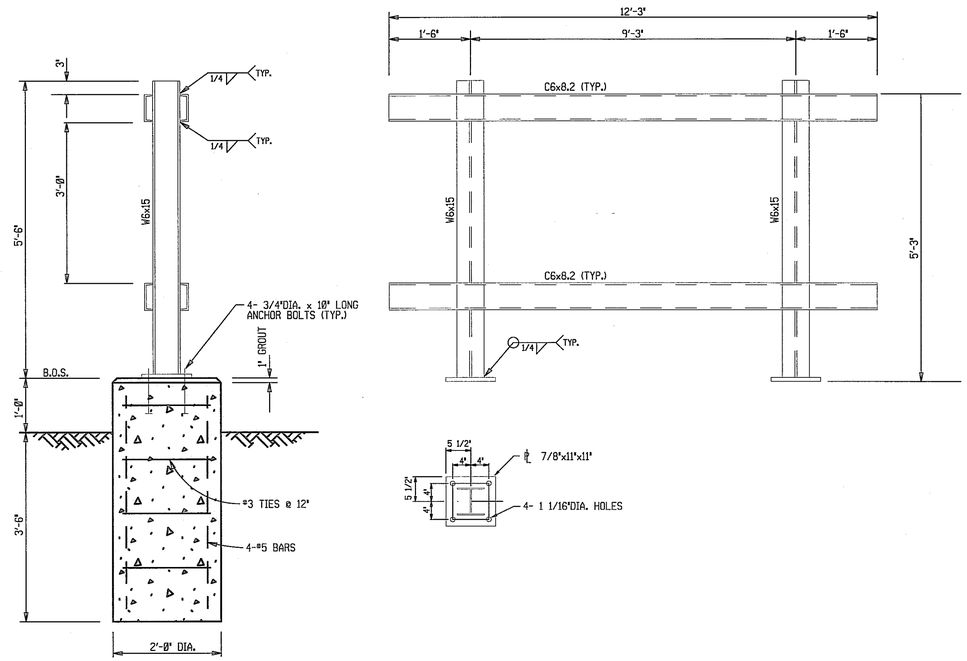

ELECTRIC PANEL SUPPORT DETAIL

SCALE: 3/4" = 1'-0"

REV. MARK	REVISION	BY	CHK	APP	DATE
A	ADDED SHEETS B2-032 THRU B2-036				

CONSULTANT

URS

URS CORPORATION
MIDLAND, MI
25 BUILDING, DOOR 1

URS PROJECT NUMBER: 41569617

DRAWING ISSUE RECORD

ISSUE NO.	REV	MATERIAL OR JOB SPEC	BID	FAB	CONST	REF.
2	0	RECORD DRAWINGS				1/2015
1	A	FOR CONSTRUCTION			3/2014	

DATE ISSUED FOR

DESIGNED	URS CORPORATION	6/2008
DRAWN	URS CORPORATION	6/2008
CHECKED	URS CORPORATION	6/2008
APPROVED	J. ALLEN	6/2008
PROJ. ENGR.	J. ALLEN	6/2008
MFG. REP.	K. DETRICH	6/2008

STATUS | PLANT NO.

P.E. SEAL

DOW THE DOW CHEMICAL COMPANY

MICHIGAN OPERATIONS — MIDLAND, MICHIGAN

PROJECT — 3600 BLDG

SALZBURG LANDFILL
PHASE 1 - CELLS 23 THROUGH 28 PROJECT
LS ELECTRIC PANEL SUPPORT DETAILS

PROJECT NUMBER	SCALE		REV.
119217	AS SHOWN	B2-106-119217	0

PRINTED | VER.

STATE OF MICHIGAN
MICHAEL J. STEPIC
ENGINEER
NO. 60457
LICENSED PROFESSIONAL ENGINEER

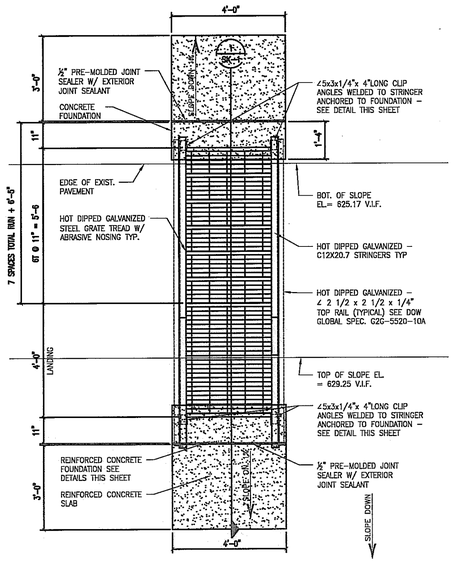

ACCESS STAIR PLAN

0 2' 4' 8'

NOTES:

- SEE DOW GLOBAL SPECIFICATIONS FOR STAIR DETAILS.
- FIELD VERIFY DIMENSIONS PRIOR TO CONSTRUCTION.
- ALL STEEL MEMBERS TO BE HOT DIPPED GALVANIZED.

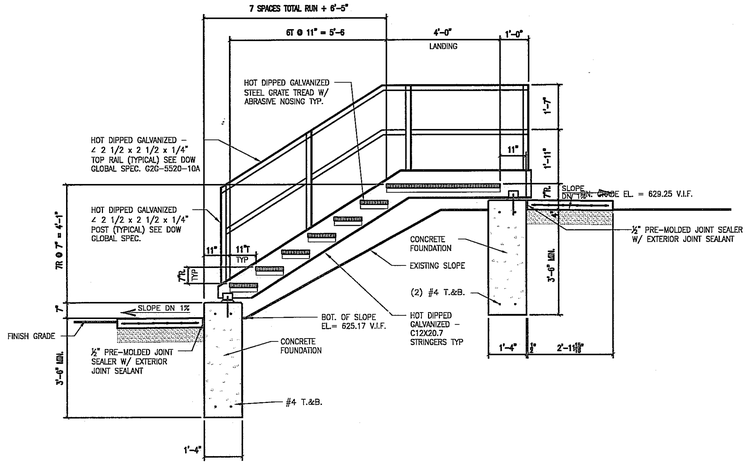

1/107 ACCESS STAIR SECTION

0 2' 4' 8'

NOTES:

- SEE DOW GLOBAL SPECIFICATIONS FOR STAIR DETAILS.
- FIELD VERIFY DIMENSIONS PRIOR TO CONSTRUCTION.
- ALL STEEL MEMBERS TO BE HOT DIPPED GALVANIZED.

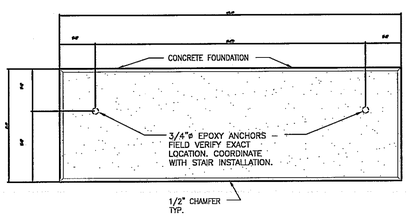

PLAN VIEW

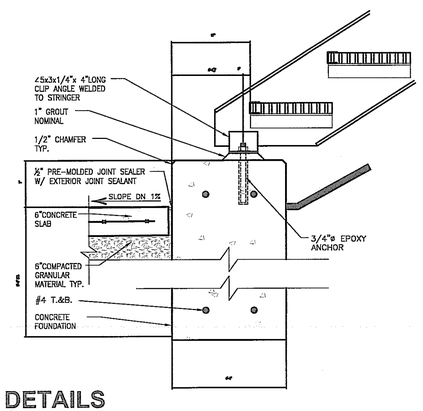

2/107 FOUNDATION DETAILS

NO SCALE

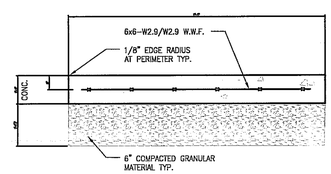

3/107 CONRETE SLAB DETAIL

NO SCALE

REV. MARK	REVISION	BY	CHK	APP	DATE
A	ADDED SHEETS B2-032 THRU B2-035				

CONSULTANT

URS

URS CORPORATION
MIDLAND, MI
25 BUILDING, DOOR 1

URS PROJECT NUMBER: 41569617

DRAWING ISSUE RECORD

ISSUE NO.	REV	MATERIAL OR JOB SPEC	BID	FAB	CONST	REF
			DATE ISSUED FOR			
2	0	RECORD DRAWINGS				1/2015
1	A	FOR CONSTRUCTION			3/2014	

DESIGNED	URS CORPORATION	6/2008
DRAWN	URS CORPORATION	6/2008
CHECKED	URS CORPORATION	6/2008
APPROVED	J. ALLEN	6/2008
PROJ. ENGR.	J. ALLEN	6/2008
MFG. REP.	K. DETRICH	6/2008

STATUS

P.E. SEAL

PLANT NO.

DOW THE DOW CHEMICAL COMPANY

MICHIGAN OPERATIONS — MIDLAND, MICHIGAN

PROJECT — 3500 BLDG

SALZBURG LANDFILL
PHASE 1 - CELLS 23 THROUGH 28 PROJECT
ACCESS STAIR DETAILS

PROJECT NUMBER	SCALE		REV.
119217	AS SHOWN	B2-107-119217	0

PRINTED

VER.

STATE OF MICHIGAN
MICHAEL J. STEPIC
ENGINEER
NO. 60457
LICENSED PROFESSIONAL ENGINEER

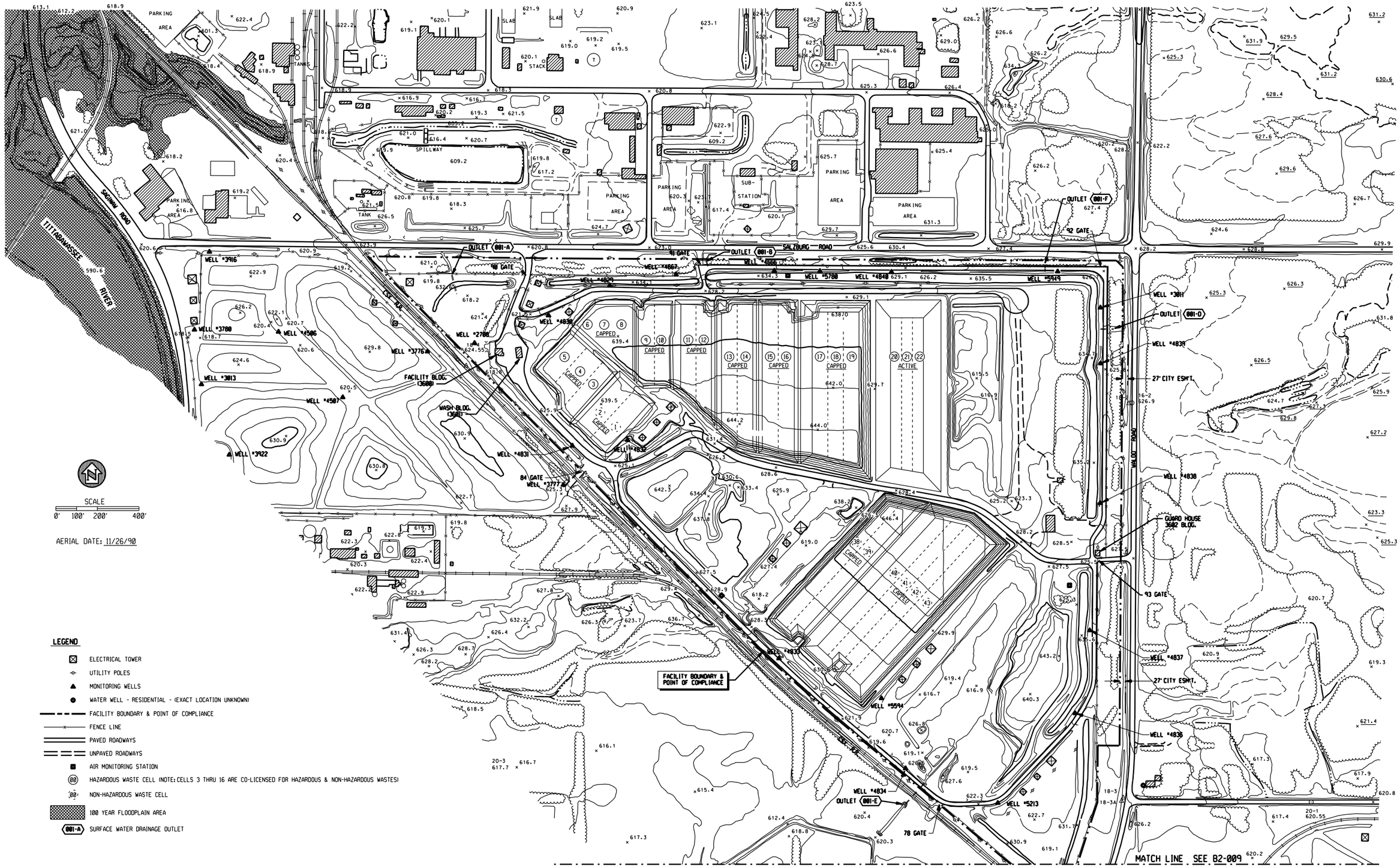

REV. MARK	REVISION	BY	CHK	APP	DATE
A	ADDED REFERENCE TO POINT OF COMPLIANCE & OUTLET "F"	LEG	JJA	JJA	9/08

DRAWING ISSUE RECORD

ISSUE NO.	REV	MATERIAL OR JOB SPEC	BID	FAB	CONST	REF
			DATE ISSUED FOR			

DESIGNED	J.J. ALLEN	11/05
DRAWN	L.E. GIRARDIN	11/05
CHECKED	J.J.A.	11/05
APPROVED	J.J.A.	11/05
PROJ. ENGR.	J.J. ALLEN	11/05
MFG. REP.	STEVE LUCAS	11/05

STATUS | PLANT NO. | P.E. SEAL

THE DOW CHEMICAL COMPANY

MICHIGAN DIVISION — MIDLAND, MICHIGAN

SALZBURG LANDFILL — 3600 BLDG

FIGURE 11.P-1
SITE TOPOGRAPHIC MAP
(SHEET 1 OF 2)

EJN NUMBER	SCALE		REV.
114291	1" = 200'-0"	B2-100-1374	A

2 PLN

PRINTED | VER.

LEGEND

- ELECTRICAL TOWER
- UTILITY POLES
- MONITORING WELLS
- WATER WELL - RESIDENTIAL - (EXACT LOCATION UNKNOWN)
- FACILITY BOUNDARY & POINT OF COMPLIANCE
- FENCE LINE
- PAVED ROADWAYS
- UNPAVED ROADWAYS
- AIR MONITORING STATION
- (00) HAZARDOUS WASTE CELL
- (00) NON-HAZARDOUS WASTE CELL
- (001-C) SURFACE WATER DRAINAGE OUTLET

SCALE
0' 100' 200' 400'

AERIAL DATE: 11/26/90

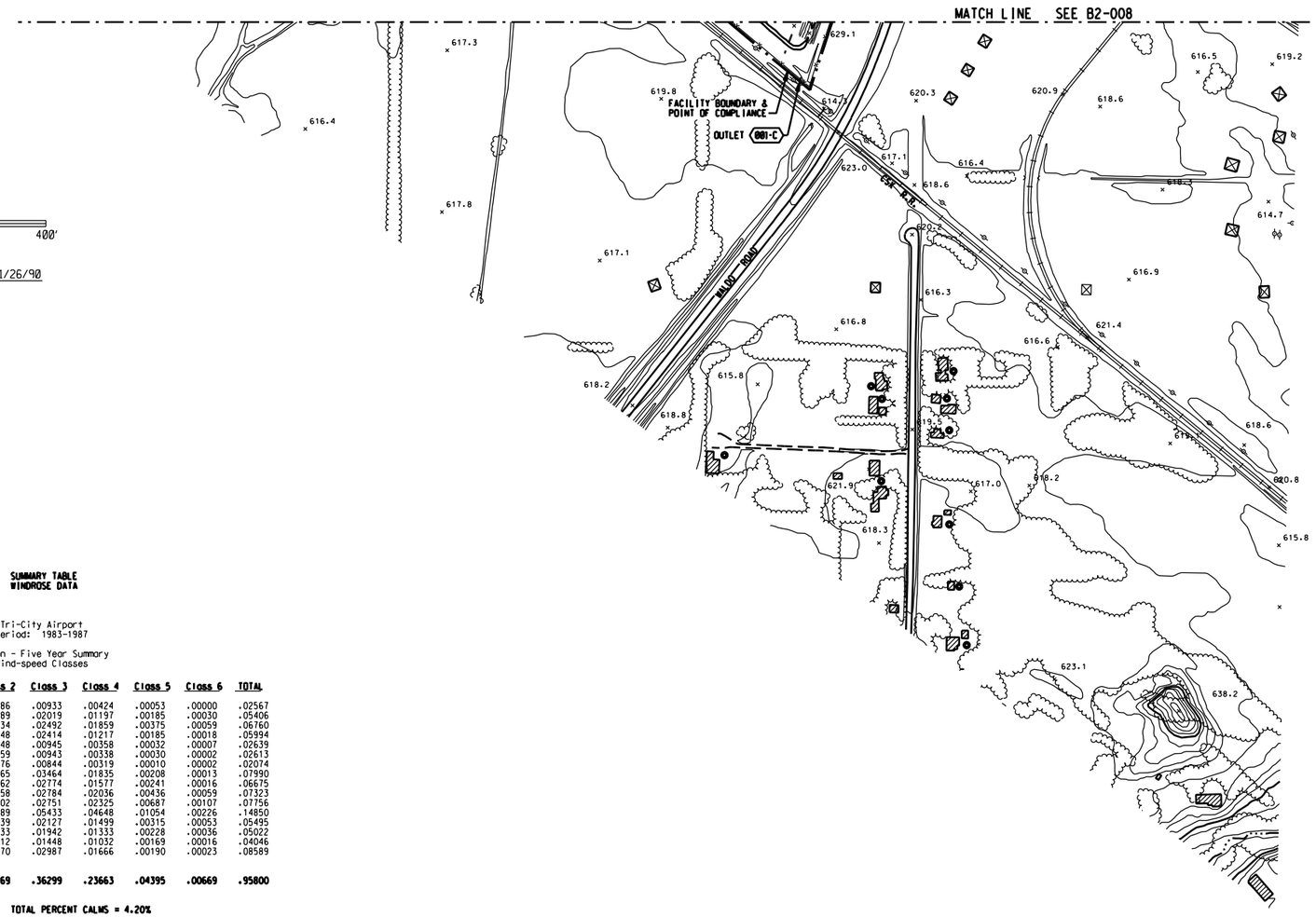

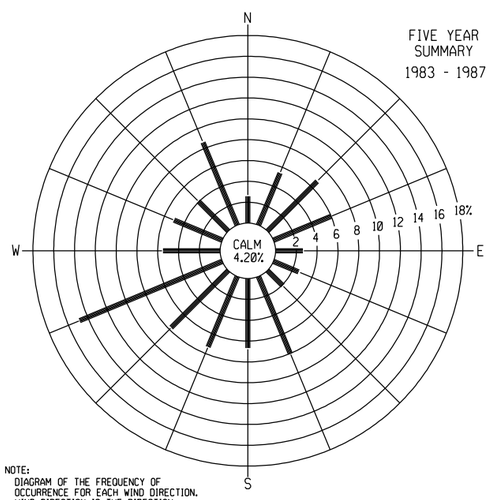

NOTE:
DIAGRAM OF THE FREQUENCY OF OCCURRENCE FOR EACH WIND DIRECTION. WIND DIRECTION IS THE DIRECTION FROM WHICH THE WIND IS BLOWING. EXAMPLE - WIND IS BLOWING FROM THE NORTH 2.6 PERCENT OF THE TIME.

WINDROSE

SUMMARY TABLE
WINDROSE DATA

Tri-City Airport
Period: 1983-1987

Season - Five Year Summary
Wind-speed Classes

Direction	Class 1	Class 2	Class 3	Class 4	Class 5	Class 6	TOTAL
.0	.00171	.00986	.00933	.00424	.00053	.00000	.02567
22.5	.00285	.01689	.02019	.01197	.00185	.00030	.05406
45.0	.00241	.01734	.02492	.01859	.00375	.00059	.06760
67.5	.00312	.01848	.02414	.01217	.00185	.00018	.05994
90.0	.00150	.01148	.00945	.00358	.00032	.00007	.02639
112.5	.00142	.01159	.00943	.00338	.00030	.00002	.02613
135.0	.00124	.00776	.00844	.00319	.00010	.00002	.02074
157.5	.00306	.02165	.03464	.01835	.00208	.00013	.07990
180.0	.00205	.01862	.02774	.01577	.00241	.00016	.06675
202.5	.00150	.01858	.02784	.02036	.00436	.00059	.07323
225.0	.00183	.01702	.02751	.02325	.00687	.00107	.07756
247.5	.00399	.03089	.05433	.04648	.01054	.00226	.14850
270.0	.00162	.01339	.02127	.01499	.00315	.00053	.05495
292.5	.00150	.01333	.01942	.01333	.00228	.00036	.05022
315.0	.00169	.01212	.01448	.01032	.00169	.00016	.04046
337.5	.00454	.03270	.02987	.01666	.00190	.00023	.08589
TOTAL	.03605	.27169	.36299	.23663	.04395	.00669	.95800

TOTAL PERCENT CALMS = 4.20%

Wind Speed Classes (Knots)

Class 1 -------- 1-3
Class 2 -------- 4-6
Class 3 -------- 7-10
Class 4 -------- 11-16
Class 5 -------- 17-21
Class 6 -------- > 21

REV. MARK	REVISION	BY	CHK	APP	DATE
A	ADDED REFERENCE TO POINT OF COMPLIANCE	LEG	JJA	JJA	9/08

REV. MARK	REVISION	BY	CHK	APP	DATE

DRAWING ISSUE RECORD

ISSUE NO.	REV	MATERIAL OR JOB SPEC	BID	FAB	CONST	REF
			DATE ISSUED FOR			

DESIGNED	J.J. ALLLEN	11/05
DRAWN	L.E. GIRARDIN	11/05
CHECKED	J.J.A.	11/05
APPROVED	J.J.A.	11/05
PROJ. ENGR.	J.J. ALLEN	11/05
MFG. REP.	STEVE LUCAS	11/05

STATUS | PLANT NO.
P.E. SEAL

THE DOW CHEMICAL COMPANY
MICHIGAN DIVISION — MIDLAND, MICHIGAN
SALZBURG LANDFILL — 3600 BLDG

FIGURE 11.P-2
SITE TOPOGRAPHIC MAP
(SHEET 2 OF 2)

EJN NUMBER	SCALE		REV.
114291	1" = 200'-0"	B2-101-1374	A

2 PLN

PRINTED | VER.

$PERSON $DATE $TIME $FILENAME $INSTRUCTIONS

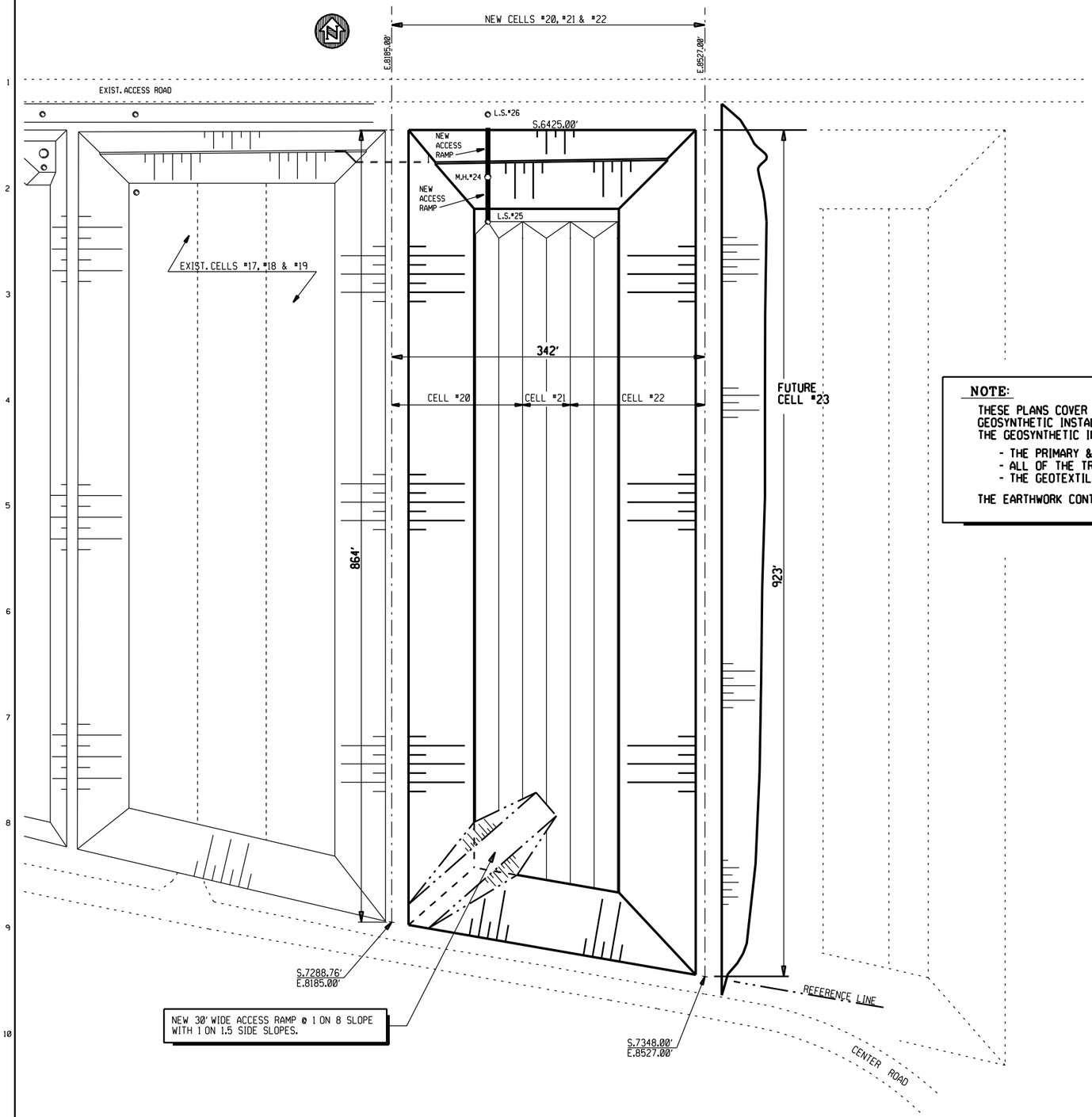

NOTE:

THESE PLANS COVER BOTH THE EARTHWORK CONTRACT AND THE GEOSYNTHETIC INSTALLATION CONTRACT FOR THIS PROJECT. THE GEOSYNTHETIC INSTALLATION CONTRACT INCLUDES:

- THE PRIMARY & SECONDARY SYNTHETIC LINERS
- ALL OF THE TRI-PLANAR GEONET DRAINAGE MEDIA WORK
- THE GEOTEXTILE CUSHION WORK

THE EARTHWORK CONTRACT INCLUDES ALL OTHER WORK ON THE PROJECT.

LEGEND:

ALL ELEVATIONS = U.S.G.S. DATUM

HDPE = HIGH DENSITY POLYETHYLENE

GTX = GEOTEXTILE

GNT = GEONET

PERF = PERFORATED

GM = GEOMEMBRANE

LS = LIFT STATION

MH = MANHOLE

SSL = SECONDARY SYNTHETIC LINER - 60 MIL HDPE TEXTURED BOTH SIDES, WHITE ONE SIDE (UP)

PSL = PRIMARY SYNTHETIC LINER - 80 MIL HDPE TEXTURED BOTH SIDES, WHITE ONE SIDE (UP)

CCL = COMPACTED CLAY LINER

LCRS = LEACHATE COLLECTION & REMOVAL SYSTEM

LDCRS = LEAK DETECTION, COLLECTION & REMOVAL SYSTEM

TGDM-SB = TRI-PLANAR GEONET DRAINAGE MEDIA SINGLE BONDED (GTX ONE SIDE)

TGDM-DB = TRI-PLANAR GEONET DRAINAGE MEDIA DOUBLE BONDED (GTX BOTH SIDES)

DRAWING LIST:

B2-001-852 = GENERAL PLAN CELLS 20, 21 & 22
B2-002-852 = SITE MAP & HAUL ROUTES
B2-003-852 = SUBGRADE PLAN - CELLS 20, 21 & 22
B2-004-852 = SUBGRADE SECTIONS - CELLS 20, 21 & 22
B2-005-852 = SUBGRADE SECTIONS - CELLS 20, 21 & 22
B2-006-852 = SUBGRADE SECTION - CELLS 20, 21 & 22
B2-007-852 = NORTH WALL SUBGRADE SECTIONS
B2-008-852 = SUBGRADE SECTIONS - CELLS 20, 21 & 22
B2-009-852 = TOE DRAIN HEADER PLAN & DETAILS
B2-010-852 = SSL & LDCRS PLAN
B2-011-852 = SSL & LDCRS SECTIONS
B2-012-852 = 12" GRAVITY SEWER - BOOT DETAILS
B2-013-852 = 12" GRAVITY SEWER - BOOT DETAILS
B2-014-852 = FINISH CLAY & LEACHATE PIPING PLAN
B2-015-852 = TYPICAL SECTIONS
B2-016-852 = NORTH WALL SECTIONS
B2-017-852 = NORTH WALL SECTIONS
B2-018-852 = L.S. AREA & SOUTH END SECTIONS
B2-019-852 = MISCELLANEOUS DETAILS
B2-020-852 = MISCELLANEOUS DETAILS
B2-021-852 = LCRS MANHOLE #24
B2-022-852 = LCRS LIFT STATION #25

REV. MARK	REVISION	BY	CHK	APP	DATE
A	REVISED PER "AS-BUILT"	LEG	JJA	JJA	12/00
B	ADDED LINER WEIGHT & MATERIAL TO LEGEND	LEG	JJA	JJA	8/05

REV. MARK	REVISION	BY	CHK	APP	DATE

DRAWING ISSUE RECORD

ISSUE NO.	REV	MATERIAL OR JOB SPEC	BID	FAB	CONST	REF
5	A	MDEQ				1/01
4		S1302 & S1303			3/00	
3		S1303-852	1/00			
2		S1302-852	1/00			
1		MDEQ				1/7/00

DATE ISSUED FOR

DESIGNED	J.J. ALLEN	12/99
DRAWN	L.E. GIRARDIN	12/99
CHECKED	J.J.A.	12/99
APPROVED	J.J.A.	12/99
PROJ. ENGR.	D.L. WILLERTZ	12/99
MFG. REP.	K. DETRICH	12/99

STATUS
P.E. SEAL
PLANT NO.

THE DOW CHEMICAL COMPANY

MICHIGAN DIVISION — MIDLAND, MICHIGAN

SALZBURG LANDFILL — 3600 BLDG.

GENERAL PLAN CELLS 20, 21 & 22

JOB NUMBER	SCALE		REV.
852	1" = 60'-0"	B2-001-852	B

2 PLN

PRINTED

VER.

$PRINT SPECIFICATIONS $DATE $TIME $FILENAME

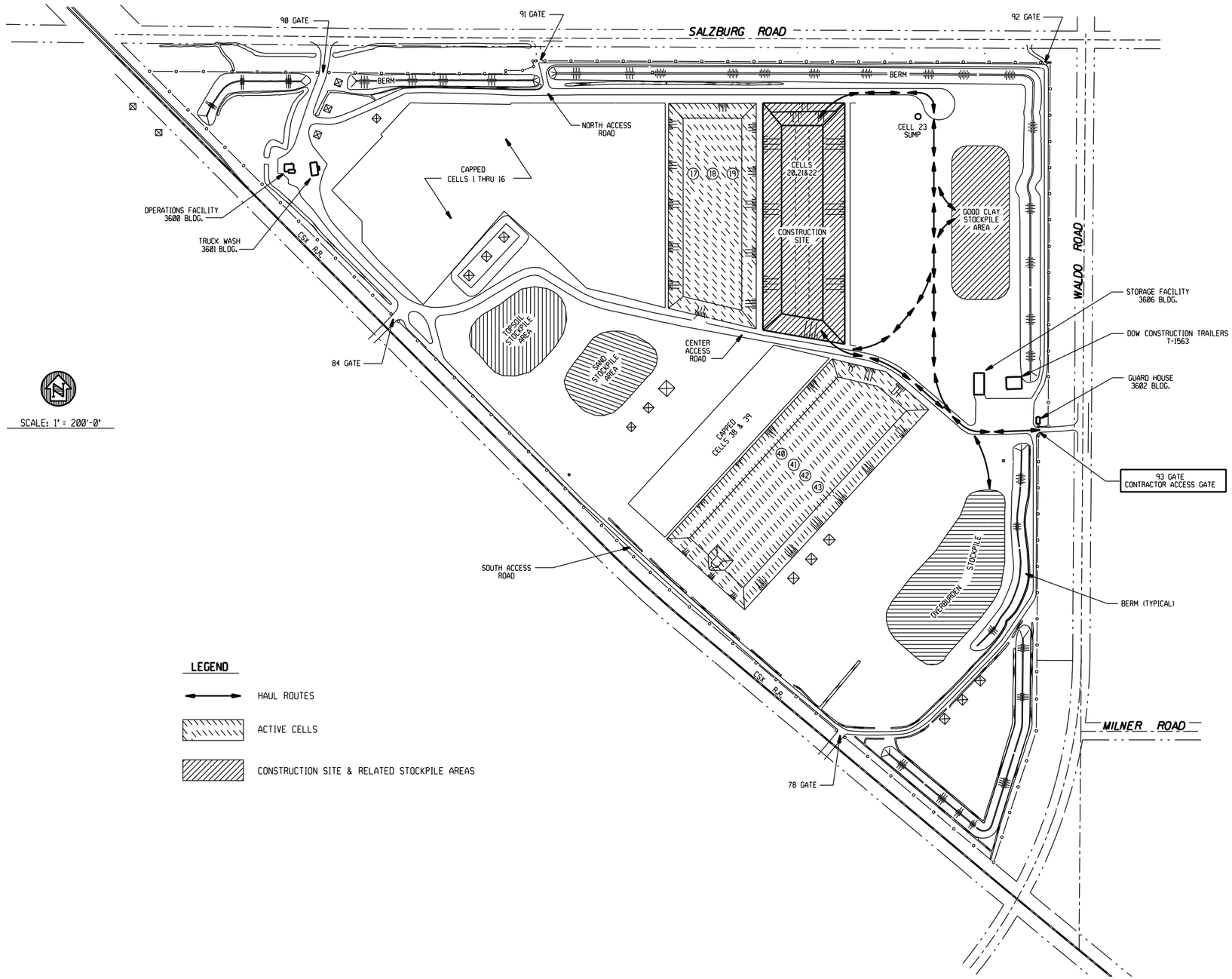

REV. MARK	REVISION	BY	CHK	APP	DATE
A	REVISED PER "AS-BUILT"	LEG	JJA	JJA	12/00
B	REVISED TOWER LOCATIONS PER NOV. '96' SURVEY DATA	LEG			10/02

REV. MARK	REVISION	BY	CHK	APP	DATE

DRAWING ISSUE RECORD

ISSUE NO.	REV	MATERIAL OR JOB SPEC	BID	FAB	CONST	REF
5	A	MDEQ				1/01
4		S1302 & S1303			3/00	
3		S1303-852	1/00			
2		S1302-852	1/00			
1		MDEQ				1/7/00

DATE ISSUED FOR

DESIGNED	J.J. ALLEN	12/99
DRAWN	L.E. GIRARDIN	12/99
CHECKED	J.J.A.	12/99
APPROVED	J.J.A.	12/99
PROJ. ENGR.	D.L. WILLERTZ	12/99
MFG. REP.	K. DETRICH	12/99

STATUS | PLANT NO.

P.E. SEAL

THE DOW CHEMICAL COMPANY

MICHIGAN DIVISION — MIDLAND, MICHIGAN

SALZBURG LANDFILL — 3600 BLDG.

SITE MAP & HAUL ROUTES
CELLS 20, 21 & 22

JOB NUMBER	SCALE		REV.
852	1" = 200'-0"	B2-002-852	B

2 PLN

PRINTED | VER.