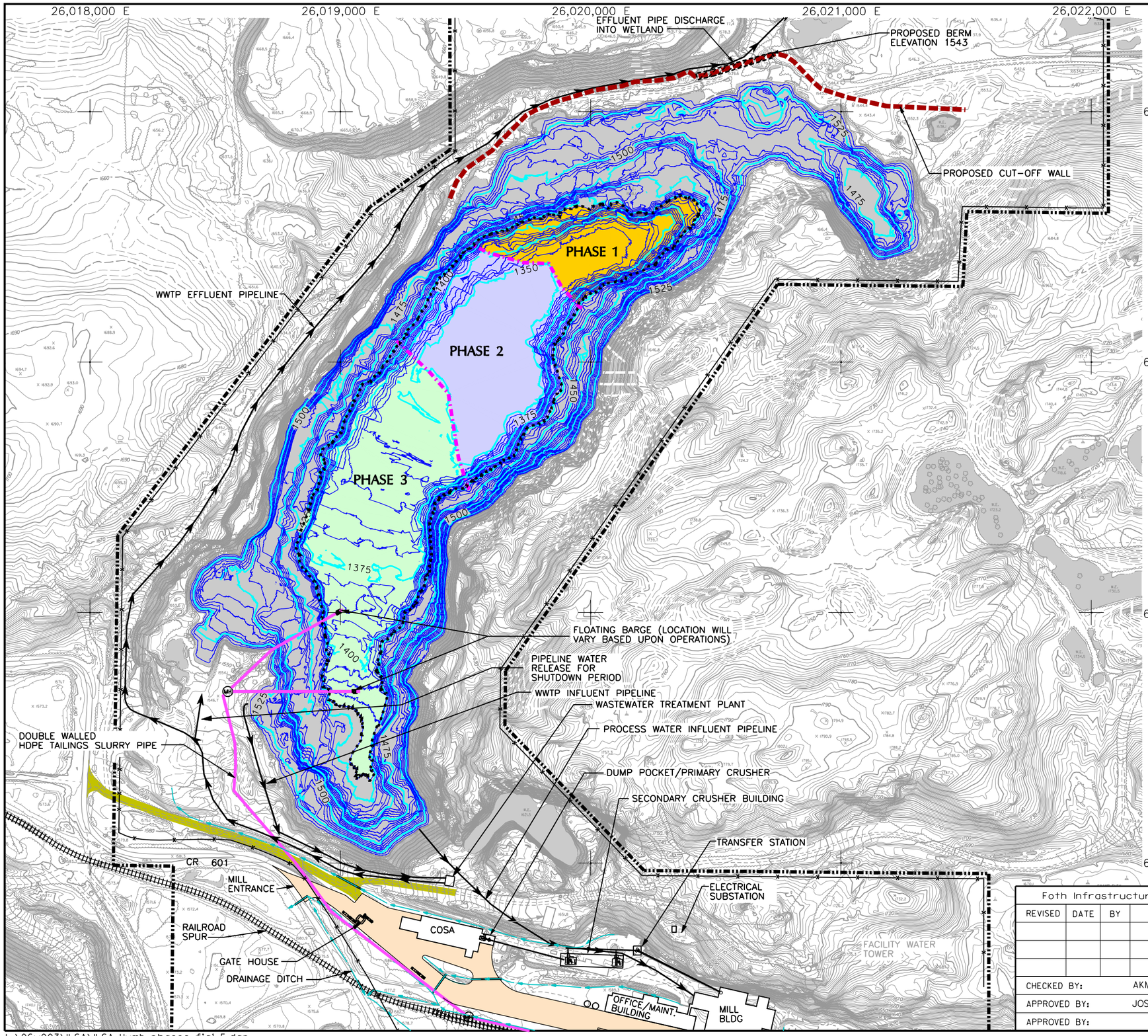

LEGEND

- EXISTING ELEV. CONTOUR IN FEET
- SPOT ELEVATION
- TREE
- TREE LINE
- BUILDING
- TRAIL
- PAVED ROAD
- UNPAVED ROAD
- STREAM/LAKE
- SURFACE WATER
- KEMC PROJECT LOCATION
- HTDF BATHYMETRIC CONTOUR
- APPROXIMATE AREA FOR HTDF PHASE 1 FILLING SEQUENCE TO ELEVATION 1420
- APPROXIMATE AREA FOR HTDF PHASE 2 FILLING SEQUENCE TO ELEVATION 1420
- APPROXIMATE AREA FOR HTDF PHASE 3 FILLING SEQUENCE TO ELEVATION 1420
- MANHOLE LOCATION
- DOUBLE ENCASED TAILINGS SLURRY PIPE
- FENCE
- BITUMINOUS PAVED AREA
- BERMED AREA TO ELEVATION 1543
- PROPOSED CUT-OFF WALL

NOTES:

1. TOPOGRAPHIC AND PLANIMETRIC DATA SUPPLIED BY AERO-METRIC ENGINEERING, SHEBOYGAN, WISCONSIN. DATE OF PHOTOGRAPHY: APRIL 27, 2006.
2. CONTOUR INTERVAL BASED ON NORTH AMERICAN VERTICAL DATUM OF 1988. HORIZONTAL DATUM BASED ON NAD 83/96. HORIZONTAL COORDINATES BASED ON MICHIGAN STATE PLANE.
3. KEMC PROJECT LOCATION WITHIN SECTIONS 2 AND 11 T47N, R29W, HUMBOLDT TOWNSHIP, MARQUETTE COUNTY, MICHIGAN.
4. TOPOGRAPHIC CONTOUR INTERVAL SHOWN IS 2 FOOT.
5. BATHYMETRIC CONTOURS ARE FROM FOTH SURVEY DATED MAY 3 & 4, 2007. CONTOURS SHOWN ARE 5 FOOT INTERVAL.
6. ALIGNMENT OF SLURRY PIPELINE MAY CHANGE BASED UPON OPERATIONAL REQUIREMENTS.

Foth Infrastructure & Environment, LLC

REVISED	DATE	BY	DESCRIPTION

CHECKED BY:	AKM	DATE:	AUG. '08
APPROVED BY:	JOS1	DATE:	AUG. '08
APPROVED BY:		DATE:	

Kennecott Eagle Minerals

FIGURE 2-1

HTDF OPERATING PLAN

Scale: 0 200' 400'		Date:	AUGUST, 2008
Prepared By:	JOW	Project No.	06W003

L:\06w003\ILSA\ILSA_Humb-phases_fig1-5.dgn
12/15/2008 bjw1

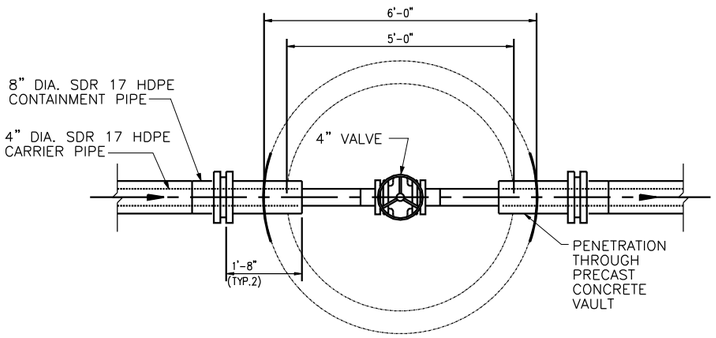

SECTION A – A'

NOT TO SCALE

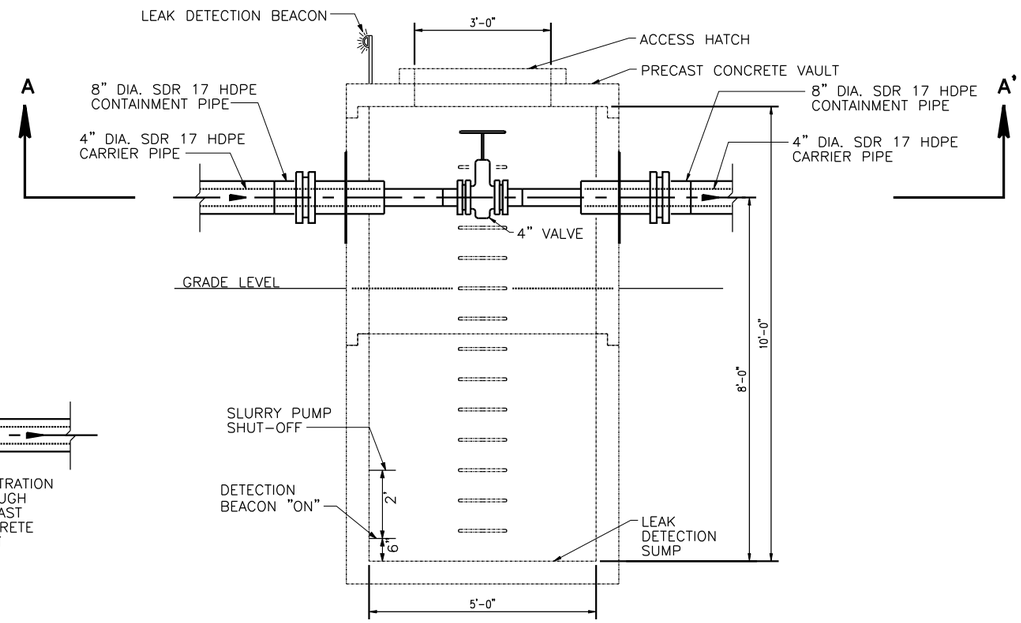

1 / 1-6 LEAK DETECTION/SPLITTER MANHOLE DETAIL

NOT TO SCALE

NOTES:

1. DETAILS ADAPTED FROM M3 ENGINEERING AND TECHNOLOGY, INC.
2. DIMENSIONS SHOWN ARE CONCEPTUAL AND MAY CHANGE BASED UPON FINAL DESIGN AND CONSTRUCTION.

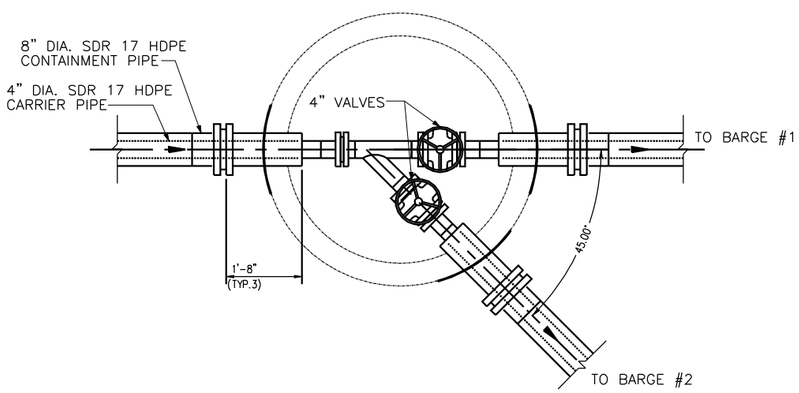

SPLITTER MANHOLE SECTION A – A'

NOT TO SCALE

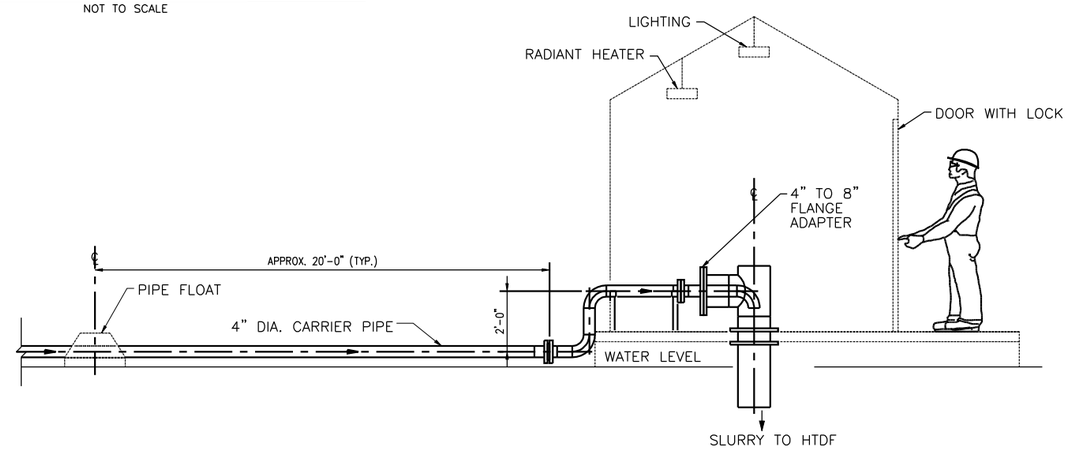

2 / 1-6 BARGE SECTION

NOT TO SCALE

Foth Infrastructure & Environment, LLC				
REVISED	DATE	BY	DESCRIPTION	
CHECKED BY:		AKM		DATE: AUG. '08
APPROVED BY:		JOS1		DATE: AUG. '08
APPROVED BY:				DATE:

Kennecott Eagle Minerals

FIGURE 2-2

SLURRY PIPELINE DESIGN FEATURES

Scale: NOT TO SCALE	Date: AUGUST, 2008
Prepared By: JOW	Project No. 06W003

L:\06w003\ILSA\ILSA_piping_mh_details_fig1-6.dgn
12/15/2008 bjw1

SECTION A - A'

SOUTH

NORTH

EXISTING GRADE

WATER ELEV.=1537.88
JUNE 5, 2007

PERIMETER DIKE
TO ELEV.=1543 MSL

SLURRY WALL

BEDROCK
ELEVATION

BATHYMETRIC
SURVEY

TOP OF CAP AT
ELEV.=1420.5 MSL

TOP OF EAGLE TAILINGS
AT ELEV.=1420.0 MSL

PHASE 3

PHASE 2

PHASE 1

ROPES MINE TAILINGS

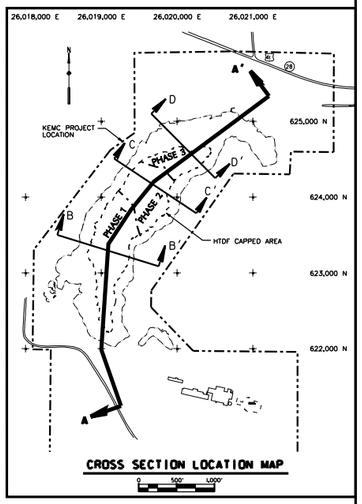

CROSS SECTION LOCATION MAP

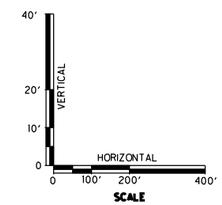

SCALE

NOTES:

1. BATHYMETRY SURVEY CONDUCTED BY FOTH IE ON MAY 1, 2007.
2. TOP ELEVATION OF EAGLE TAILINGS MAY VARY BASED UPON MOUNDING DURING PLACEMENT. TOP ELEVATION WILL NOT EXCEED 1475 MSL.

Foth Infrastructure & Environment, LLC				
REVISED	DATE	BY	DESCRIPTION	
CHECKED BY:	JOS1		DATE: AUG. '08	
APPROVED BY:	SVD1		DATE: AUG. '08	
APPROVED BY:			DATE:	

Kennecott Eagle Minerals

FIGURE 2-3

HTDF PROPOSED FILL CROSS SECTION A-A'

Scale:	AS SHOWN	Date:	AUGUST, 2008
Prepared By:	JOW	Project No.	06W003

L:\06w003\ILSA\ILSA_cross_section_fig1-7.dgn
12/15/2008 bjw1

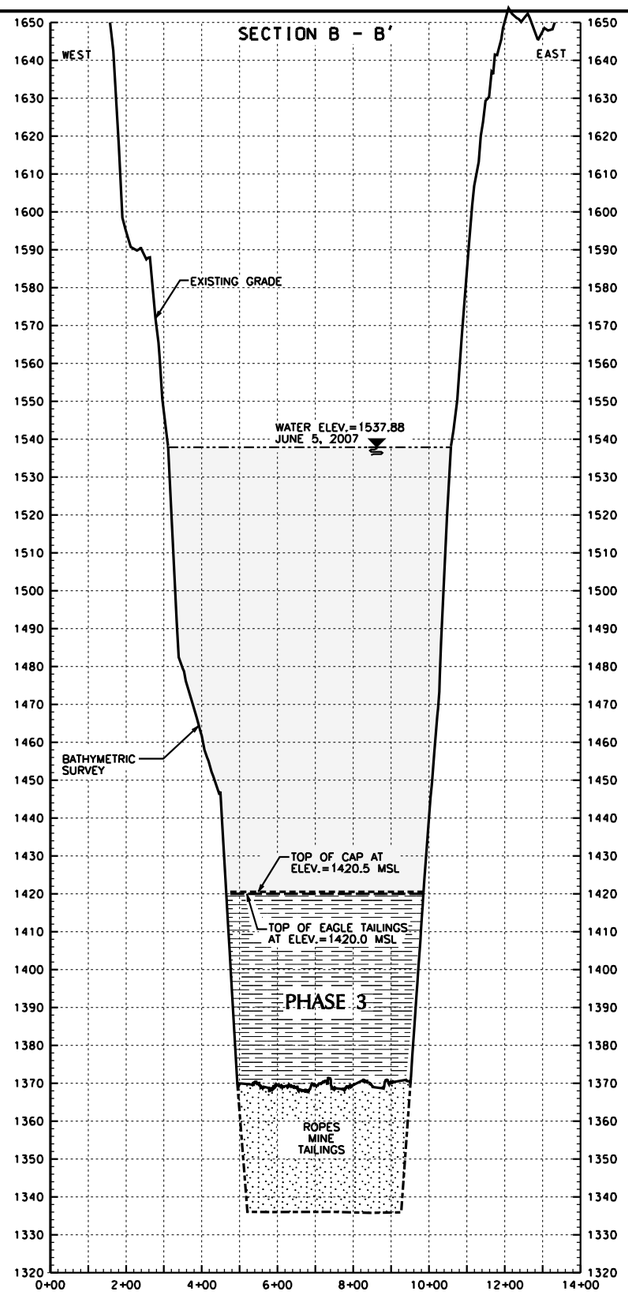

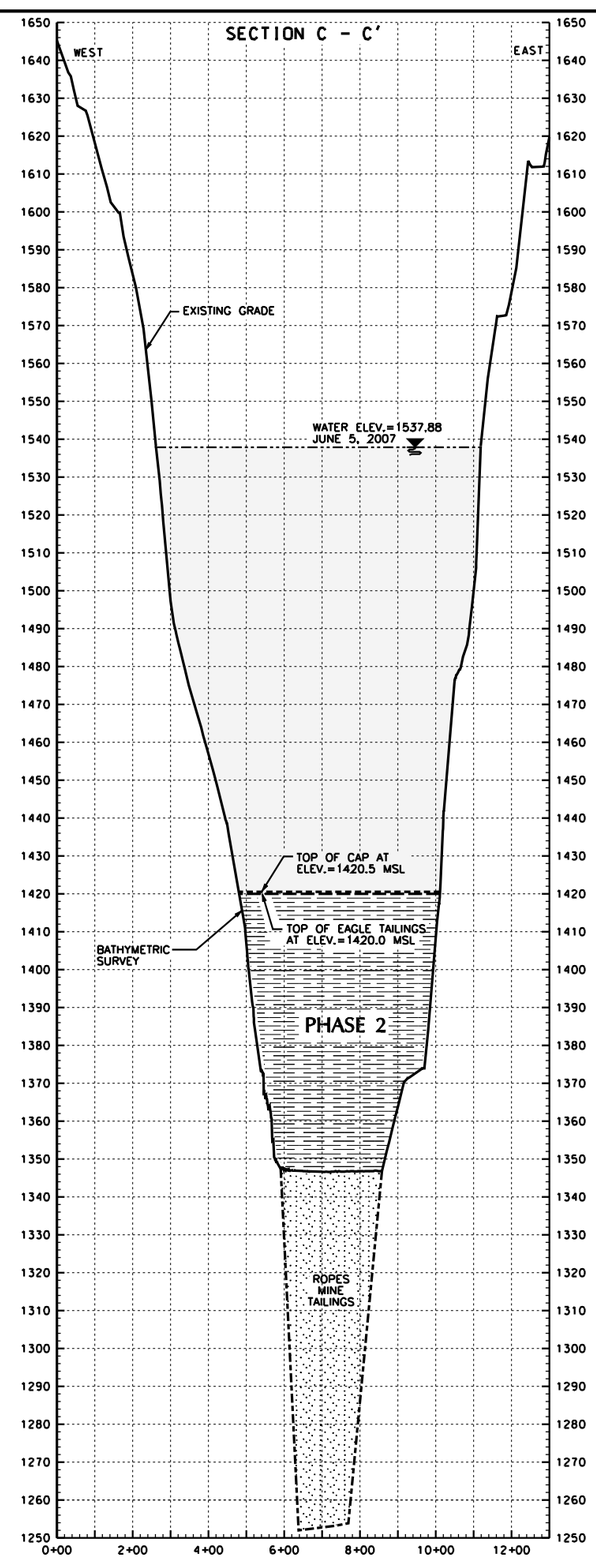

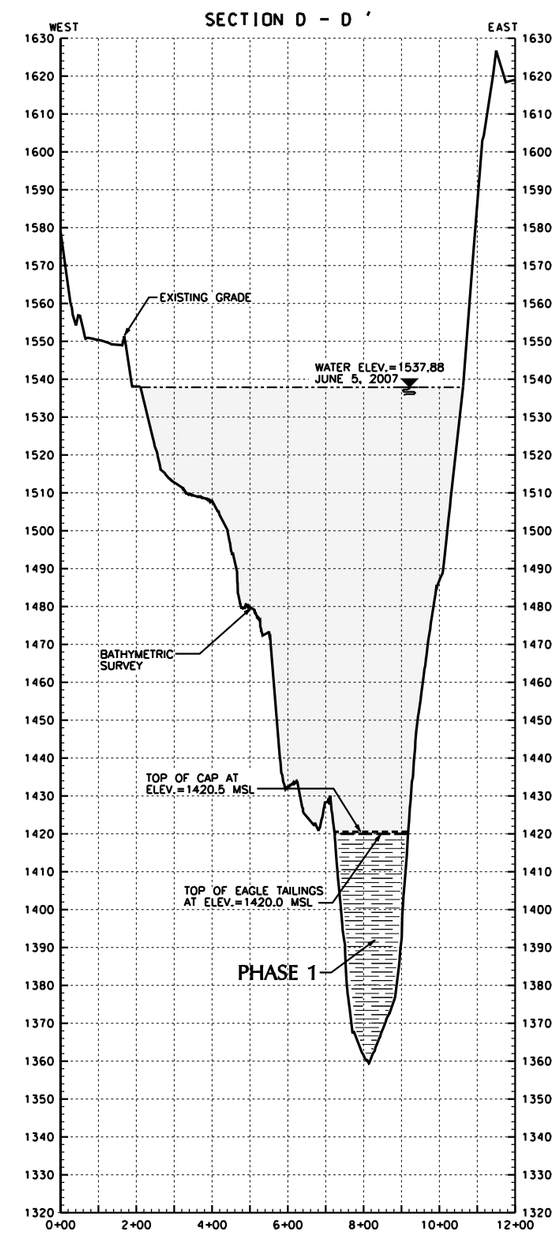

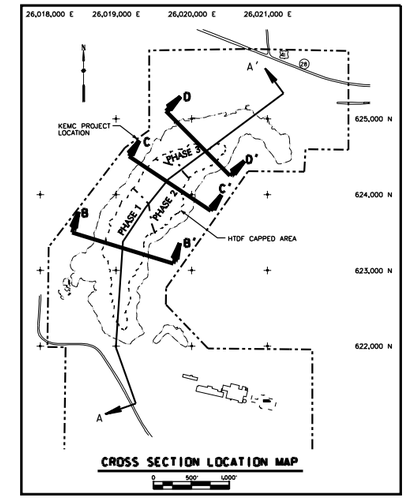

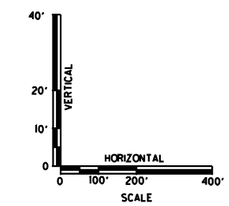

NOTES:

1. BATHYMETRY SURVEY CONDUCTED BY FOTH IE ON MAY 1, 2007.
2. TOP ELEVATION OF EAGLE TAILINGS MAY VARY BASED UPON MOUNDING DURING PLACEMENT. TOP ELEVATION WILL NOT EXCEED 1475 MSL.

Foth Infrastructure & Environment, LLC			
REVISED	DATE	BY	DESCRIPTION
CHECKED BY:	JOS1	DATE: AUG. '08	
APPROVED BY:	SVD1	DATE: AUG. '08	
APPROVED BY:		DATE:	

Kennecott Eagle Minerals

FIGURE 2-4

HTDF PROPOSED FILL
CROSS SECTIONS B-B', C-C' AND D-D'

Scale:	AS SHOWN	Date:	AUGUST, 2008
Prepared By:	JOW	Project No.	06W003

L:\06w003\ILSA\ILSA_cross_section_fig1-8.dgn
12/15/2008 bjw1

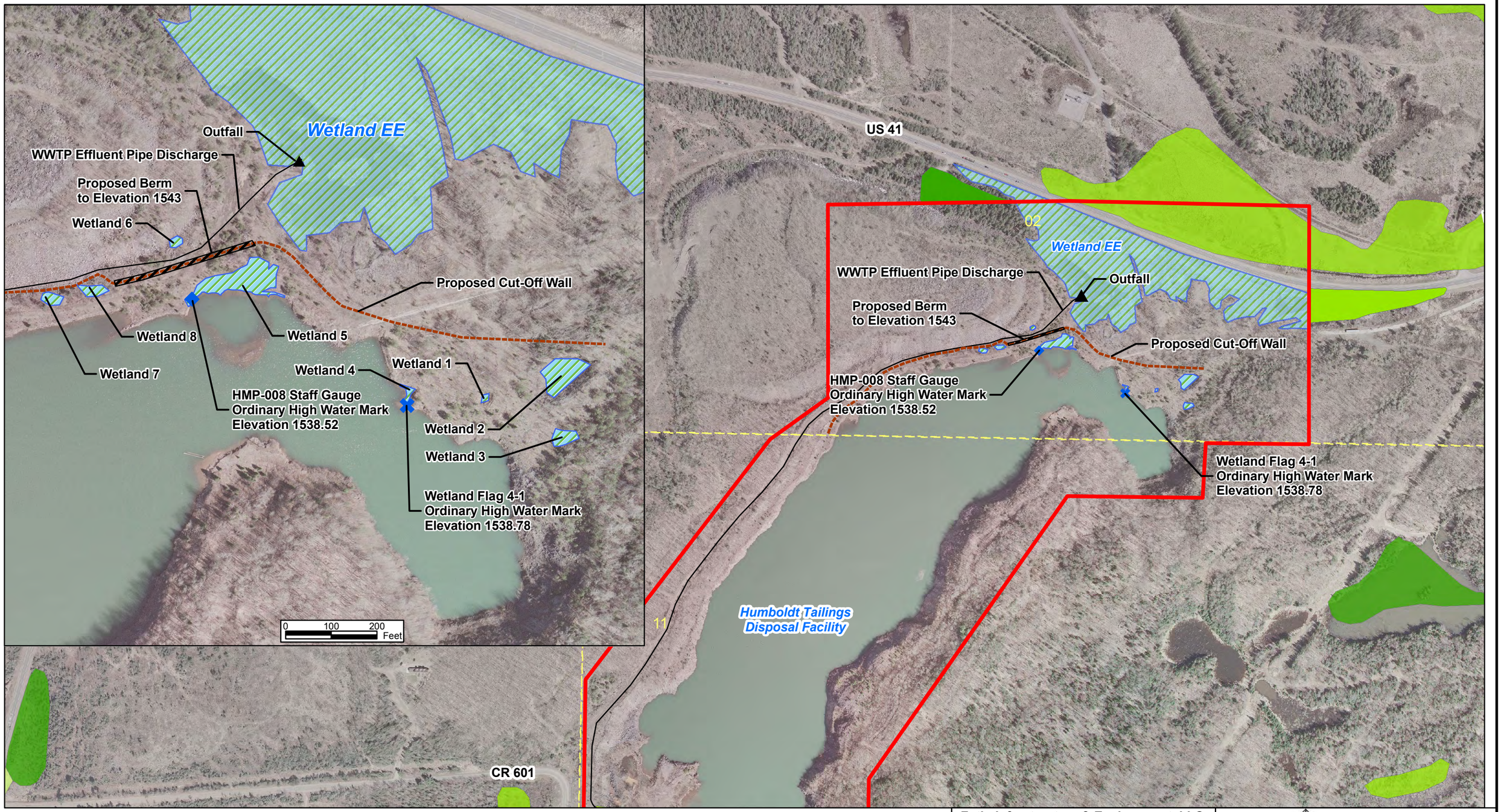

NOTES

1. Orthophotography supplied by Aero-Metric Engineering, Sheboygan, Wisconsin. Date of photography: April 27, 2006.
2. Horizontal datum based on NAD 83/94. Horizontal coordinates based on UTM Zone 16.
3. Site Location - Project Site within Sections 2 and 11, T47N, R29W, Humboldt Township, Marquette County, Michigan.

LEGEND

- Proposed Cut-Off Wall
- WWTP Effluent Pipeline
- Proposed Berm
- KEMC Project Location
- Wetland Flag 1-4
- Staff Gauge
- Flagged Wetland Boundary (Area approximately 12.25 acres)
- PLSS Sections

Marquette County NWI Outside Project Boundary

- Emergent
- Scrub-Shrub
- Forested

N

Foth
Foth Infrastructure & Environment, LLC

Foth Infrastructure & Environment, LLC

REVISED	DATE	BY	DESCRIPTION

CHECKED BY:	KKB	DATE:	OCT. '08
APPROVED BY:	SVD1	DATE:	OCT. '08
APPROVED BY:		DATE:	

Kennecott
Eagle Minerals

FIGURE 2-5

WWTP DISCHARGE LOCATION AND CUT-OFF WALL

Scale: 0 250 500 Feet

Date: OCTOBER, 2008

Prepared by: BJW1

Project No: 06W003

M:\06w003\mxd\KME\2008\kmc_humboldt_wetlandEE_discharge_loc_wetlandSEP08_11x17.mxd October 13, 2008

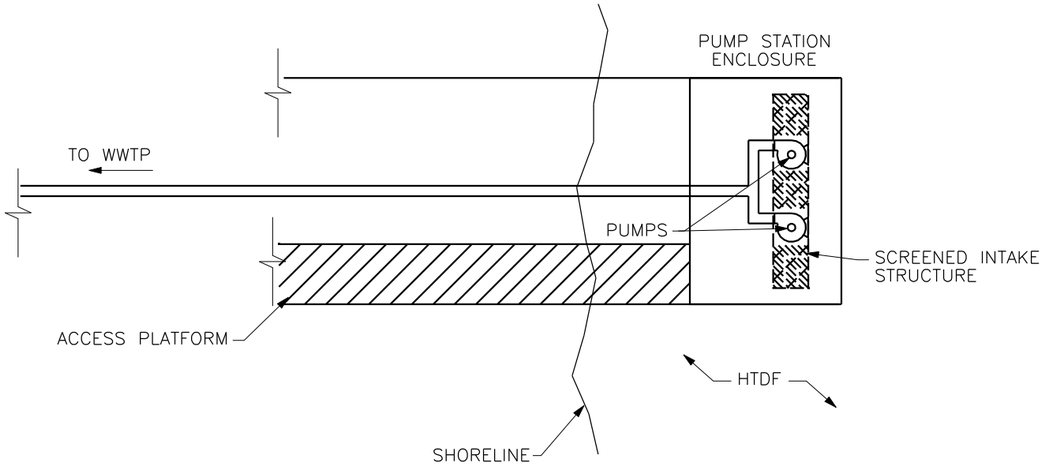

PLAN VIEW - INTAKE PIPE

NOT TO SCALE

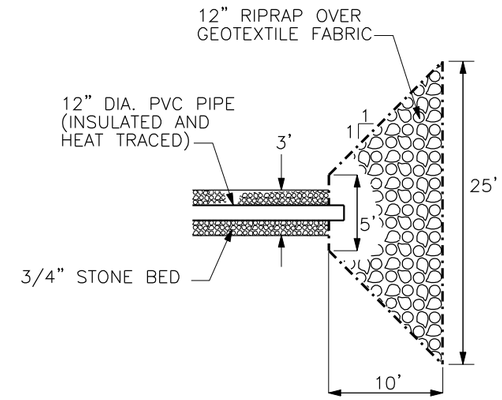

PLAN VIEW - DISCHARGE OUTFALL

NOT TO SCALE

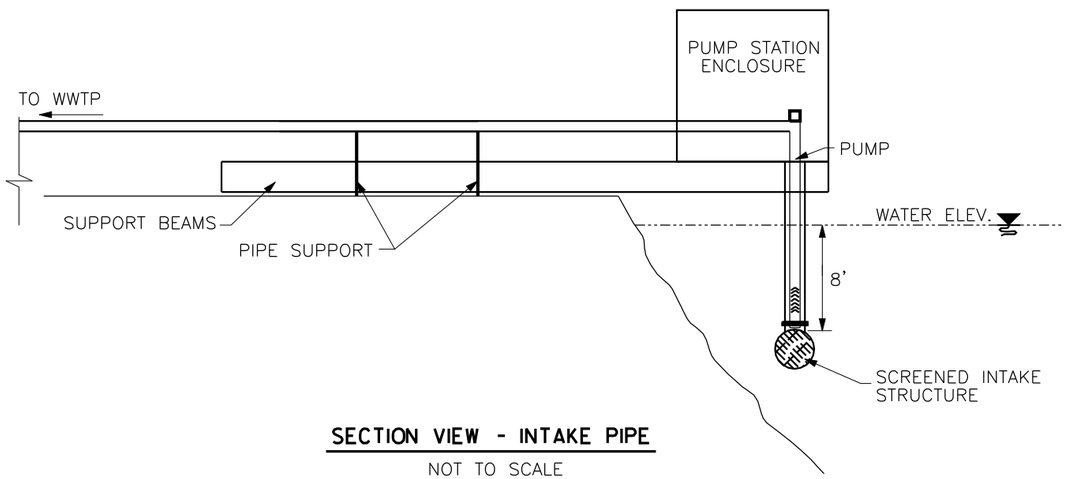

SECTION VIEW - INTAKE PIPE

NOT TO SCALE

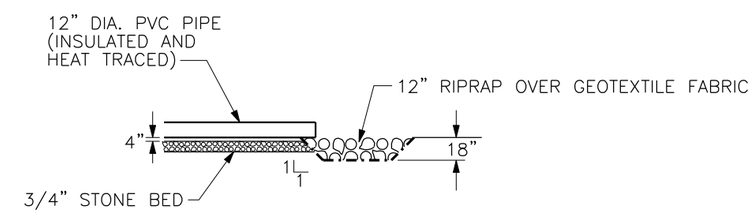

SECTION VIEW - DISCHARGE OUTFALL

NOT TO SCALE

NOTE:

1. TURBINE TYPE PUMPS ARE SHOWN. ALTERNATE PUMPS, SUCH AS SUCTION LIFT, MAY BE PROVIDED.

Foth Infrastructure & Environment, LLC				
REVISED	DATE	BY	DESCRIPTION	
CHECKED BY:	JJF1			DATE: AUG. '08
APPROVED BY:	GRE			DATE: AUG. '08
APPROVED BY:				DATE:

Kennecott
Eagle Minerals

FIGURE 2-6

INTAKE AND OUTFALL DETAILS

Scale: NOT TO SCALE	Date: AUGUST, 2008
Prepared By: JOW	Project No. 06W003

L:\06w003\ILSA\ILSA_details_fig1-9.dgn
12/15/2008 bjw1