Michigan Department of Environmental Quality
Water Resources Division
Guidance for Permit Applicants and Permittees Regarding Baseline Information and Monitoring Requirements for Lake Aeration Projects

Decisions on inland lake aeration permit applications are based on the Michigan Department of Environmental Quality's (MDEQ) review of the proposed project in light of the criteria in Part 301, Inland Lakes and Streams, of the Natural Resources and Environmental Protection Act, 1994 PA 451, as amended, and associated administrative rules, which generally require that a project will not adversely affect the public trust, riparian rights, or the environment. For the purposes of this guidance, aeration is the process of artificially introducing air to the bottom of a lake to circulate the water to create an aerobic environment. As part of the application review process, MDEQ staff consider existing lake conditions and whether the proposed project is expected to result in unacceptable changes to the natural condition of the lake. Information regarding current conditions must be submitted with the permit application; it is considered to be "baseline" information. Baseline monitoring data submitted with the permit application must include basic parameters that will enable staff to evaluate whether projects may, or do, adversely affect the lake. In addition, there are, or could be, other potential concerns with riparian rights, fish, and other wildlife, impacts to wetlands, or state regulation that must be met. To this end, in addition to meeting the requirements outlined in this document, a project must meet all requirements of other environmental regulations. Monitoring during the project, if permitted, may also be required and would be detailed as a condition of the permit.

In general, installation of aeration systems has focused on one or more of the following objectives: (1) improve water quality; (2) decrease organic substrate (e.g., muck); and (3) reduce the growth of plants and algae. Although the intent of the aeration system is to improve lake conditions, there may be unintentional negative effects that occur as a result of manipulating the natural physical and chemical characteristics of a lake. The following baseline information, monitoring parameters, and protocols are the minimum amount of information necessary for a complete permit application. Quality assurance and control performance requirements are also needed to ensure that the data being collected are high quality. The MDEQ has tried to simplify and streamline these monitoring requirements by focusing only on the critical water quality and biological indicators needed to properly evaluate potential impacts on a lake.

Monitoring Requirements

The following information should be collected for any proposed lake aeration project, regardless of the cited objective(s). One year of pre-aeration monitoring data must be submitted with the permit application to establish baseline water quality conditions in a lake. The permit, if issued, may also require collection of the information during project implementation. Three years of monitoring during project implementation will typically be required as a permit condition, usually in permit years one, two, and five. In rare circumstances, more or fewer years of monitoring may be required as site-specific circumstances warrant. If the applicant does not apply for a permit reissuance, the year five monitoring requirement will be waived. If another permit is sought, the year five monitoring can be conducted with the system still operational (i.e., it does not need to be shut off). If an existing permit does not include a condition for monitoring in year 5 (or the last year the permit is valid), the permittee is advised to conduct monitoring in

year five to serve as the pre-application monitoring for another permit application, should another permit be sought.

When an applicant proposes to destratify a lake, or in cases where MDEQ staff are concerned that destratification may occur even if not intended, additional monitoring will be required to ensure protection of the lake. These requirements are described in a separate section below.

For purposes of this guidance, a year of monitoring consists of consecutive sampling events in the spring after ice-out (April/mid-May), mid-summer (mid-June/July), and late summer (mid-August/September). Such sampling could occur in one calendar year (e.g., spring 2017, mid-summer 2017, late summer 2017), or over two consecutive years (e.g., late summer 2017, spring 2018, and mid-summer 2018). In addition, winter monitoring for temperature, dissolved oxygen, and Secchi depth will be conducted once during ice cover, ideally in February if ice cover is sufficient.

Data should be collected by an entity with established expertise and experience conducting water quality monitoring on inland lakes, following the protocols outlined in this guidance. Sample analysis must be completed by a laboratory with defined standard operating procedures and quality assurance/quality control practices.

Water Chemistry and Physical Parameters

One sample should be collected from every 50 acres of lake surface area, or fraction thereof, undergoing treatment, at the deepest location within each 50-acre plot. One or more locations in an area unaffected by the aeration should also be sampled, if applicable, depending on site-specific conditions.

At the beginning of each sampling event, a vertical profile of depth, temperature, and dissolved oxygen will be made to determine the extent of stratification, and identify the epilimnion, thermocline, and hypolimnion if these strata exist at the time of sampling. Water quality characteristics for specific conductance, water temperature, dissolved oxygen, and pH throughout the water column should be made by measuring these parameters versus depth at every two-foot interval. The nutrients listed in Table 1 (total phosphorus, soluble reactive phosphorus, ammonia, nitrate-nitrite, Kjeldahl nitrogen) and total suspended solids should be collected at three discrete depths using a Van Dorn sampler, or similar collection device. Sampling at three discrete depths consists of collecting samples within three feet of the surface, at mid-depth, and at one-half to one foot from the lake bottom. If the lake is stratified, the mid-depth sample should be collected in the thermocline. In cases where the lake is shallow and the vertical profile is completely mixed and uniform (i.e., no evidence of stratification), then one mid-depth sample for nutrients and total suspended solids will be sufficient. The performance requirements for the analytical methods are provided in Table 1.

Secchi disk measurements determine transparency and define the euphotic zone. The euphotic zone in a lake is the layer of water that receives enough light for photosynthesis to occur, and is considered to be two times the Secchi depth. Therefore, the Secchi depth must be measured and the euphotic zone established, prior to collecting a chlorophyll *a* sample. Samples for chlorophyll *a* will be collected using a depth integrated composite sampler that is lowered through the euphotic zone (i.e., two times Secchi depth) to obtain a composite sample for chlorophyll *a* analysis.

Table 1. Performance Requirements for Water Chemistry and Chlorophyll *a* Analytical Methods.

Parameter	Units	Analytical Method	Analytical Method Technique	Method Detection Level	Sample Holding Time
Temperature	°F	Data sonde	Measured with Field Instrument	0.01[1]	N/A
Dissolved Oxygen	mg/l	Data sonde	Measured with Field Instrument	0.01[1]	N/A
pH	pH units	Data sonde	Measured with Field Instrument	0.01[1]	N/A
Specific Conductance	mS/cm at 25°C	Data sonde	Measured with Field Instrument	0.1[1]	N/A
Total Phosphorus	mg/l	EPA 365.4	Block Digester; Auto Colorimetric Ascorbic Acid Reduction	0.01	28 days, cool <4°C, pH<2[2]
Soluble Reactive Phosphorus	mg/l	EPA 365.1	Filter w/ 0.45 µm filter, Auto Colorimetric Ascorbic Acid Reduction	0.01	48 hrs, cool 4°C
Ammonia	mg/l	EPA 350.1	Semi-automated colorimetry	0.01	28 days, cool <4°C, pH<22
Nitrate-Nitrite	mg/l	EPA 353.2	Automated colorimetry	0.01	28 days, cool <4°C, pH<2[2]
Kjeldahl Nitrogen	mg/l	EPA 351.2	Semi-automated colorimetry	0.1	28 days, cool <4°C, pH<2[2]
Total Suspended Solids	mg/l	SM2540D[3] or EPA 160.2	Total suspended solids dried at 103-105°C	1.0	7 days, cool 4°C
Chlorophyll *a*[4]	µg/l	EPA 445.0 or 4500-CI-E[3]	Chlorophyll filtered; pigment extracted, Fluorometric	1.0	48 hours

[1] Performance Resolution
[2] Preserve sample to pH <2 using sulfuric acid (10 drops/500 ml)
[3] Standard Methods for the Examination of Water and Wastewater, 18th, 19th, or 20th edition
[4] Preserve sample using magnesium carbonate

Increased productivity and sediment resuspension may lead to increased biological oxygen demand throughout the winter, resulting in potential hypoxia and fish kills. Therefore, in addition to the spring and summer monitoring, a dissolved oxygen and temperature profile should be taken from ice-covered lakes as part of the pre-treatment and treatment phases to assess potential hypoxic conditions. This sampling should occur in late January, February, or early March. A Secchi disk reading should also be taken at this time. This sampling assumes that safe ice conditions exist; if there is not safe ice cover, the sampling is not required.

To protect spawning habitat and aquatic life from the potential spread of fine-grained or organic sediment to areas with high-quality substrate, as well as to prevent potential nuisance conditions for riparian owners, an assessment of substrate types will be conducted. During the late summer pre-aeration sampling, the applicant is responsible for characterizing the bottom substrate in the area(s) where the diffusers will be placed. This can be accomplished using sonar techniques to map bottom sediment hardness, complemented by grab samples to verify the sonar results. Grab samples can be collected using a PONAR sampler, Ekman dredge, core sampler, or similar sampling device. As a general rule, we suggest collecting one sample for every five acres of lake area where the diffusers are located. More or fewer samples may be needed, depending on substrate uniformity/variability. Samples also may be needed in shallow areas that are not adequately mapped by sonar due to accessibility. Samples will be analyzed for percent organic matter using ASTM Method D-2974-87 (Appendix 2) and for particle size using ASTM Method D 422-63 (Appendix 3) at a certified laboratory.

Based on the number and location of diffusers, the pre-aeration substrate data, and lake-specific characteristics such as known fish spawning beds, littoral zone sites will be identified for continued sampling during project implementation. Like the baseline assessment, the post-aeration substrate monitoring should consist of sonar mapping complemented by PONAR grab samples during the late summer sampling event.

Sediment sampling for contaminant analysis may be required if the proposed project area is in an area with known or suspected contamination. The need for sediment contaminant testing is expected to occur only occasionally. Therefore, MDEQ staff will screen proposed projects for any needed sediment testing as part of the application review process and notify the applicant should testing be necessary. If required, the number of sampling locations and the parameters to be measured will be based on site-specific conditions.

Biological Parameters

The various types of phytoplankton (algae) found in a lake serve as good indicators of water quality. The resuspension of nutrient-laden sediments from the bottom waters could cause an increase in water column nutrients at the surface, result in an increase in algal productivity, and decrease water column clarity (i.e., Secchi depth). The type of algae present and their abundance in an aquatic system can reflect a lake's trophic status and may be indicative of nutrient enrichment conditions. Therefore, the percent community assemblage (i.e., taxonomic community) of green, blue-green, and diatom algae will be determined during the late summer sampling event. Phytoplanktonic algae, which are suspended or swim freely in open water, should be the focus of collection. Depth-integrated water samples should be collected from the photic zone at each sampling location. These samples should then be composited into one sample, mixed, and a 500 milliliter sub-sample taken and preserved. Phytoplankton samples should be identified by trained personnel.

A commonly-cited objective of lake aeration projects is to reduce the nuisance growth of both invasive and non-invasive aquatic plants. However, because multiple strategies are often

employed to manage plants in lakes, making it difficult or impossible to identify potential effects on plant communities specifically due to aeration, the MDEQ is **not** requiring the collection of aquatic vegetation information under this guidance. In some circumstances the vendor, monitoring consultants, or lake residents might want to collect such information to help determine whether changes in vegetation type or abundance have occurred. An aquatic vegetation survey can provide a baseline of the aquatic macrophyte community present, and the cumulative cover percentages for each plant species found throughout a lake's littoral zone. A list of the species (both native and non-native) and their distribution in the lake, and density and cumulative cover of both native and non-native plant species are useful components of an aquatic vegetation survey. If such a survey is required or conducted voluntarily, a survey should be conducted by sampling individual sites throughout a lake's littoral zone using the MDEQ Procedure for Aquatic Vegetation Assessment Surveys (AVAS). This procedure can be supplied to applicants upon request.

Requirements in Deep Lakes when Destratification is Proposed or Possible

In circumstances where aeration is proposed that may - intended or not - destratify a lake, additional monitoring will be required and additional review will be done in coordination with the Michigan Department of Natural Resources (MDNR), Fisheries Division, due to the potential for significant impacts. In these cases, zooplankton should be collected for community analysis during the spring and late-summer sampling events at the locations used for water quality and phytoplankton sampling. A plankton net with a straining bucket should be lowered to the top of the hypolimnion if the lake is stratified, or near the bottom (without disturbing it) if the water is mixed at the sampling location. We recommend a zooplankton net mesh size of 63 or 153 micrometers. After pausing for about 30 seconds, the net should be lifted in a smooth motion at a rate of about four feet per second. The net should be raised above the surface until the bucket is just above the surface. Water should be splashed on the outside of the net to dislodge zooplankton from the net into the bucket. Drain the bucket into a 125 milliliter bottle with a CO_2 tablet (e.g., Alka Seltzer) (to anesthetize the zooplankton), then preserve with 70 percent ethyl alcohol. Community analysis should consist of species identification and a summary of the percentage of cladocerans, copepods, and rotifers in the samples.

Aeration systems (i.e., pumping ambient air from the atmosphere as opposed to oxygen from a tank) pump nitrogen gas into the lake. Nitrogen gas pumped into deep water (>30 feet) has the potential to result in nitrogen gas supersaturation and could cause gas bubble disease in fish. Permits for aeration systems at depths >30 feet should require nitrogen gas monitoring using a total gas meter. A nitrogen gas meter is relatively inexpensive and has been successful in monitoring at MDNR fish hatcheries.

The timing of sample collection for each of the parameters described above are summarized in Table 2.

Table 2. Sample timing for each monitoring parameter. Monitoring to be conducted one year prior to aeration (baseline data), and in years 1, 2, and 5 of the permitted aeration.

MONITORING PARAMETER	Spring after ice-out (April/mid-May)	Mid-Summer (late-June/July)	Late summer (mid-August/September)	Winter during ice cover (February)
Temperature	X	X	X	X
Secchi Disk Transparency	X	X	X	X
Dissolved Oxygen	X	X	X	X
pH	X	X	X	
Specific Conductance	X	X	X	
Total Phosphorus	X	X	X	X (destratification only)
Soluble Reactive Phosphorus	X	X	X	X (destratification only)
Ammonia	X	X	X	X (destratification only)
Total Nitrogen	X	X	X	X (destratification only)
Nitrate-Nitrite	X	X	X	X (destratification only)
Kjeldahl Nitrogen	X	X	X	X (destratification only)
Total Suspended Solids	X	X	X	X (destratification only)
Chlorophyll *a*	X	X	X	
Substrate			X	
Phytoplankton			X	
Nitrogen Gas (destratification only)	X	X	X	
Zooplankton (destratification only)	X		X	

Report Format

Data that are collected for submittal with the application, as well as data collected during the project period, should be reported in the format outlined in Appendix 1.

For information or assistance on this publication, please contact the Water Resources Division, through the DEQ Environmental Assistance Center at 800-662-9278. This publication is available in alternative formats upon request.

The Michigan Department of Environmental Quality (MDEQ) will not discriminate against any individual or group on the basis of race, sex, religion, age, national origin, color, marital status, disability, political beliefs, height, weight, genetic information, or sexual orientation. Questions or concerns should be directed to the Quality of Life Human Resources, P.O. Box 30473, Lansing, MI 48909-7973.

This publication is intended for guidance only and may be impacted by changes in legislation, rules, policies, and procedures adopted after the date of publication. Although this publication makes every effort to teach users how to meet applicable compliance

APPENDIX 1

Report Format Example

Introduction

This section should include:

a. A summary of aeration operations, with beginning and ending dates of aeration for each year the system is in operation, and any variations in operation intensity. If bacteria or any other chemicals/materials were added to the water during aeration as part of the project, this should be reflected in the introduction. In addition, the Rule 97 Certification that was obtained prior to the project initiation should be attached. This link has information on applying for a Rule 97 Certification to use bacterial products in surface waters. http://www.michigan.gov/deq/0,4561,7-135-3313_46123_46124---,00.html

b. A brief, but specific summary of intended objective(s) and goals of aeration operations.

c. A brief summary of lake management activities to date and lake levels (if applicable).

Sampling Methods

This section should include:

a. A summary of the types of equipment and sampling devices used; the number of samples and replicates that were collected; the depths at which samples were collected; and a map of the lake with sampling locations and diffuser locations identified using Global Positioning System coordinates.

b. Sampling dates, and the lake/water chemistry parameters collected on the specific sampling dates.

c. A brief summary of Standard Methods used for processing and analyzing samples.

Sampling Results

This section should include:

a. Summary tables and figures developed from raw data collected during preoperation and during operation of the aeration system, and any ambient weather data such as wind speed, wind direction, and ambient air temperature. Raw data should be included as an appendix in the final report.

b. The summary tables and figures should include profiles of water temperature versus depth; dissolved oxygen versus depth; conductivity versus depth; and pH versus depth. They also should include summary tables and figures for water chemistry (i.e., total phosphorus, orthophosphorus, and total suspended solids), and chlorophyll *a*.

c. Summary tables and figures for phytoplankton community assemblage data (i.e., percent green, blue-green, and diatom algae), and zooplankton community assemblage if collection is required. Likewise, if the applicant chooses to collect AVAS data (which is

optional per the guidance), the identified macrophyte species as well as distribution, density, and cumulative cover of both native and non-native species within the lake, should be provided.

d. A description and summary of sediment measurements (% organic matter, particle size) taken at specified locations around the diffusers, and a description of substrate type (i.e., sand, silt, and clay). A comparison of pre- and post-operational sediment conditions should be included in the report.

Conclusions

This section should include:

a. A narrative summary of trends during the sampling years for water chemistry parameters (i.e., water temperature, conductivity, pH, dissolved oxygen, Secchi depth, nutrients, and suspended solids), lake productivity (documented changes in lake trophic state through chlorophyll *a* analysis), any influence of aeration on algal and aquatic macrophyte species, and sediment measurements.

b. An analysis of whether herbicide treatments or other management activities (dredging, lake drawdown, mechanical, etc.) occurred and influenced sampling results.

ASTM D 2974-87
Standard Test Methods for Moisture, Ash, and Organic Matter of Peat and Other Organic Soils

American Society for Testing and Materials, 1916 Race St., Philadelphia, PA 19103. Reprinted from the Annual Book of ASTM Standards, Copyright ASTM.

THIS STANDARD is issued under the fixed designation D 2974; the number immediately following the designation indicates the year of original adoption or, in the case of revision, the year of last revision. A number in parentheses indicates the year of last reapproval. A superscript epsilon (ϵ) indicates an editorial change since the last revision or reapproval.

These test methods are under the jurisdiction of ASTM Committee D-18 on Soil and Rock and are the direct responsibility of Subcommittee D18.18 on Peats and Related Materials.

Current edition approved May 29, 1987. Published July 1987. Originally published as D 2974 - 71. Last previous edition D 2974 - 84.

1. Scope

1.1 These test methods cover the measurement of moisture content, ash content, and organic matter in peats and other organic soils, such as organic clays, silts, and mucks.

1.2 The values stated in SI units are to be regarded as the standard.

1.3 *This standard may involve hazardous materials, operations, and equipment. This standard does not purport to address all of the safety problems associated with its use. It is the responsibility of the user of this standard to establish appropriate safety and health practices and determine the applicability of regulatory limitations prior to use.*

2. Summary of Methods

2.1 *Method A* — Moisture is determined by drying a peat or organic soil sample at 105°C. The moisture content is expressed either as a percent of the oven dry mass or of the as-received mass.

2.2 *Method B* — This is an alternative moisture method which removes the total moisture in two steps: (*1*) evaporation of moisture in air at room temperature (air-drying), and (*2*) the subsequent oven drying of the air-dried sample at 105°C. This method provides a more stable sample, the air-dried sample, when tests for nitrogen, pH, cation exchange, and the like are to be made.

2.3 *Methods C and D* — Ash content of a peat or organic soil sample is determined by igniting the oven-dried sample from the moisture content determination in a muffle furnace at 440°C (Method C) or 750°C (Method D). The substance remaining after ignition is the ash. The ash content is expressed as a percentage of the mass of the oven-dried sample.

2.4 Organic matter is determined by subtracting percent ash content from 100.

3. Apparatus

3.1 *Oven*, capable of being regulated to a constant temperature of 105 ± 5°C.

NOTE — The temperature of 105°C is quite critical for organic soils. The oven should be checked for "hot spots" to avoid possible ignition of the specimen.

3.2 *Muffle Furnace*, capable of producing constant temperatures of 440°C and 750°C.

3.3 *Evaporating Dishes*, of high silica or porcelain of not less than 100 mL capacity.

3.4 *Blender*, high-speed.

3.5 *Aluminum Foil*, heavy-duty.

3.6 *Porcelain Pan, Spoons*, and equipment of the like.

3.7 *Desiccator.*

4. Preparation of Sample

4.1 Place a representative field sample on a square rubber sheet, oil cloth, or equivalent material. Reduce the sample to the quantity required by quartering and place in a moisture-proof container. Work rapidly to prevent moisture loss or perform the operation in a room with a high humidity.

Moisture Content

5. Method A

5.1 Record to the nearest 0.01 g the mass of a high-silica or porcelain evaporating dish fitted with a heavy-duty aluminum foil cover. The dish shall have a capacity of not less than 100 mL.

5.2 Mix thoroughly the representative sample and place a test specimen of at least 50 g in the container described in 5.1. Crush soft lumps with a spoon or spatula. The thickness of peat in the container should not exceed 3 cm.

5.3 Cover immediately with the aluminum foil cover and record the mass to the nearest 0.01 g.

5.4 Dry uncovered for at least 16 h at 105°C or until there is no change in mass of the sample after further drying periods in excess of 1 h. Remove from the oven, cover tightly, cool in a desiccator, and record the mass.

6. Method A Calculation

6.1 Calculate the moisture content as follows:

$$\textbf{Moisture Content, \%} = [(A - B) \times 100]/A$$

where:

A = mass of the as-received test specimen, g, and

B = mass of the oven-dried specimen, g.

6.1.1 This calculation is used primarily for agriculture, forestry, energy, and horticultural purposes, and the result should be referred to as the moisture content as a percentage of as-received or total mass.

6.2 An alternative calculation is as follows:

$$\textbf{Moisture Content, \%} = [(A - B) \times 100]/B$$

where:

A = as-received test specimen, g, and

B = mass of the oven-dried specimen, g.

6.2.1 This calculation is used primarily for geotechnical purposes, and the result should be referred to as the moisture content as a percentage of oven-dried mass.

6.3 Take care to indicate the calculation method used.

7. Method B

7.1 This method should be used if pH, nitrogen content, cation exchange capacity, and the like are to be tested.

7.2 Mix the sample thoroughly and select a 100 to 300 g representative sample. Determine the mass of this sample and spread evenly on a large flat pan. Crush soft lumps with a spoon or spatula and let the sample come to moisture equilibrium with room air. This will require at least 24 h. Stir occasionally to maintain maximum air exposure of the entire sample. When the mass of the sample reaches a constant value, calculate the moisture removed during air drying as a percentage of the as-received mass.

7.3 Grind a representative portion of the air-dried sample for 1 to 2 min in a high-speed blender. Use the ground portion for moisture, ash, nitrogen, cation exchange capacity tests, and the like.

7.4 Thoroughly mix the air-dried, ground sample. Weigh to the nearest 0.01 g the equivalent of 50 g of test specimen on an as-received basis. Determine the amount, in grams, of air-dried sample equivalent to 50 g of as-received sample, as follows:

Equivalent Sample Mass, g = 50.0 - [(50 × *M*)/100]

where:

M = moisture removed in air drying, %.

7.5 Place the sample in a container as described in 5.1 and proceed as in Method A.

A muffle furnace, used for organic matter analysis.

8. Method B Calculation

8.1 Calculate the moisture content as follows:

Moisture Content, % = (50 - *B*) × 2

where:

B = oven-dried sample, g.

8.1.1 This calculation gives moisture content as a percentage of as-received mass.

8.2 An alternative calculation is as follows:

Moisture Content, % = [(50 - *B*) × 100]/*B*

8.2.1 This calculation gives moisture content as a percentage of oven-dried mass.

Ash Content

9. Method C

9.1 Determine the mass of a covered high-silica or porcelain dish.

9.2 Place a part of or all of the oven-dried test specimen from a moisture determination in the dish and determine the mass of the dish and specimen.

9.3 Remove the cover and place the dish in a muffle furnace. Gradually bring the temperature in the furnace to 440°C and hold until the specimen is completely ashed (no change of mass occurs after a further period of heating).

9.4 Cover with the retained aluminum foil cover, cool in a desiccator, and determine the mass.

9.5 This method should be used for all geotechnical and general classification purposes.

10. Method D

10.1 Determine the mass of a covered high-silica or porcelain dish.

10.2 Place a part of or all of the oven-dried test specimen from a moisture determination in the dish and determine the mass of the dish and specimen.

10.3 Remove the cover and place the dish in a muffle furnace. Gradually bring the temperature in the furnace to 750°C and hold until the specimen is completely ashed (no change of mass occurs after a further period of heating).

10.4 Cover with the retained aluminum foil cover, cool in a desiccator, and determine the mass.

10.5 This method should be used when peats are being evaluated for use as a fuel.

11. Calculation for Methods C and D

11.1 Calculate the ash content as follows:

Ash Content, % = $(C \times 100)/B$

where:

C = ash, g, and

B = oven-dried test specimen, g.

Organic Matter

12. Calculation

12.1 Determine the amount of organic matter by difference, as follows:

Organic matter, % = 100.0 - D

where:

D = ash content, %.

13. Report

13.1 Report the following information:

13.1.1 Results for organic matter and ash content, to the nearest 0.1%.

13.1.2 Furnace temperature used for ash content determinations.

13.1.3 Whether moisture contents are by proportion of as-received mass or oven-dried mass.

13.1.3.1 Express results for moisture content as a percentage of as-received mass to the nearest 0.1%.

13.1.3.2 Express results for moisture content as a percentage of oven-dried mass as follows:

(*a*) Below 100% to the nearest 1%.

(*b*) Between 100% and 500% to the nearest 5%.

(*c*) Between 500% and 1000% to the nearest 10%.

(*d*) Above 1000% to the nearest 20%.

14. Precision and Bias

14.1 The precision and bias of these test methods have not been determined. Data are being sought for use in developing a precision and bias statement.

The American Society for Testing and Materials takes no position respecting the validity of any patent rights asserted in connection with any item mentioned in this standard. Users of this standard are expressly advised that determination of the validity of any such patent rights, and the risk of infringement of such rights, are entirely their own responsibility.

This standard is subject to revision at any time by the responsible technical committee and must be reviewed every five years and if not revised, either reapproved or withdrawn. Your comments are invited either for revision of this standard or for additional standards and should be addressed to ASTM Headquarters. Your comments will receive careful consideration at a meeting of the responsible technical committee, which you may attend. If you feel that your comments have not received a fair hearing, you should make your views known to the ASTM Committee on Standards, 1916 Race St., Philadelphia, PA 19103.

ASTM C-88-90
Standard Test Method for Soundness of Aggregates by Use of Sodium Sulfate or Magnesium Sulfate

ASTM C-131-89
Standard Test Method for Resistance to Degradation of Small-Size Coarse Aggregate by Abrasion and Impact in the Los Angeles Machine

ASTM procedures C-88-90 and C-131-89 are special situation tests that rarely will be required, and have not been published here. They are available from the American Society of Testing and Materials, 1916 Race Street, Philadelphia, PA 19103.

Designation: D 422 – 63 (Reapproved 1998)

Standard Test Method for Particle-Size Analysis of Soils[1]

This standard is issued under the fixed designation D 422; the number immediately following the designation indicates the year of original adoption or, in the case of revision, the year of last revision. A number in parentheses indicates the year of last reapproval. A superscript epsilon (ϵ) indicates an editorial change since the last revision or reapproval.

1. Scope

1.1 This test method covers the quantitative determination of the distribution of particle sizes in soils. The distribution of particle sizes larger than 75 µm (retained on the No. 200 sieve) is determined by sieving, while the distribution of particle sizes smaller than 75 µm is determined by a sedimentation process, using a hydrometer to secure the necessary data (Note 1 and Note 2).

NOTE 1—Separation may be made on the No. 4 (4.75-mm), No. 40 (425-µm), or No. 200 (75-µm) sieve instead of the No. 10. For whatever sieve used, the size shall be indicated in the report.

NOTE 2—Two types of dispersion devices are provided: (*1*) a high-speed mechanical stirrer, and (*2*) air dispersion. Extensive investigations indicate that air-dispersion devices produce a more positive dispersion of plastic soils below the 20-µm size and appreciably less degradation on all sizes when used with sandy soils. Because of the definite advantages favoring air dispersion, its use is recommended. The results from the two types of devices differ in magnitude, depending upon soil type, leading to marked differences in particle size distribution, especially for sizes finer than 20 µm.

2. Referenced Documents

2.1 *ASTM Standards:*

D 421 Practice for Dry Preparation of Soil Samples for Particle-Size Analysis and Determination of Soil Constants[2]

E 11 Specification for Wire-Cloth Sieves for Testing Purposes[3]

E 100 Specification for ASTM Hydrometers[4]

3. Apparatus

3.1 *Balances*—A balance sensitive to 0.01 g for weighing the material passing a No. 10 (2.00-mm) sieve, and a balance sensitive to 0.1 % of the mass of the sample to be weighed for weighing the material retained on a No. 10 sieve.

3.2 *Stirring Apparatus*—Either apparatus A or B may be used.

3.2.1 Apparatus A shall consist of a mechanically operated stirring device in which a suitably mounted electric motor turns a vertical shaft at a speed of not less than 10 000 rpm without load. The shaft shall be equipped with a replaceable stirring paddle made of metal, plastic, or hard rubber, as shown in Fig. 1. The shaft shall be of such length that the stirring paddle will operate not less than ¾ in. (19.0 mm) nor more than 1½ in. (38.1 mm) above the bottom of the dispersion cup. A special dispersion cup conforming to either of the designs shown in Fig. 2 shall be provided to hold the sample while it is being dispersed.

3.2.2 Apparatus B shall consist of an air-jet dispersion cup[5] (Note 3) conforming to the general details shown in Fig. 3 (Note 4 and Note 5).

NOTE 3—The amount of air required by an air-jet dispersion cup is of the order of 2 ft^3/min; some small air compressors are not capable of supplying sufficient air to operate a cup.

NOTE 4—Another air-type dispersion device, known as a dispersion tube, developed by Chu and Davidson at Iowa State College, has been shown to give results equivalent to those secured by the air-jet dispersion cups. When it is used, soaking of the sample can be done in the sedimentation cylinder, thus eliminating the need for transferring the slurry. When the air-dispersion tube is used, it shall be so indicated in the report.

NOTE 5—Water may condense in air lines when not in use. This water must be removed, either by using a water trap on the air line, or by blowing the water out of the line before using any of the air for dispersion purposes.

3.3 *Hydrometer*—An ASTM hydrometer, graduated to read in either specific gravity of the suspension or grams per litre of suspension, and conforming to the requirements for hydrometers 151H or 152H in Specifications E 100. Dimensions of both hydrometers are the same, the scale being the only item of difference.

3.4 *Sedimentation Cylinder*—A glass cylinder essentially 18 in. (457 mm) in height and 2½ in. (63.5 mm) in diameter, and marked for a volume of 1000 mL. The inside diameter shall be such that the 1000-mL mark is 36 ± 2 cm from the bottom on the inside.

3.5 *Thermometer*—A thermometer accurate to 1°F (0.5°C).

3.6 *Sieves*—A series of sieves, of square-mesh woven-wire cloth, conforming to the requirements of Specification E 11. A full set of sieves includes the following (Note 6):

[1] This test method is under the jurisdiction of ASTM Committee D-18 on Soil and Rock and is the direct responsibility of Subcommittee D18.03 on Texture, Plasticity, and Density Characteristics of Soils.

Current edition approved Nov. 21, 1963. Originally published 1935. Replaces D 422 – 62.

[2] *Annual Book of ASTM Standards*, Vol 04.08.

[3] *Annual Book of ASTM Standards*, Vol 14.02.

[4] *Annual Book of ASTM Standards*, Vol 14.03.

[5] Detailed working drawings for this cup are available at a nominal cost from the American Society for Testing and Materials, 100 Barr Harbor Drive, West Conshohocken, PA 19428. Order Adjunct No. ADJD0422.

Copyright © ASTM, 100 Barr Harbor Drive, West Conshohocken, PA 19428-2959, United States.

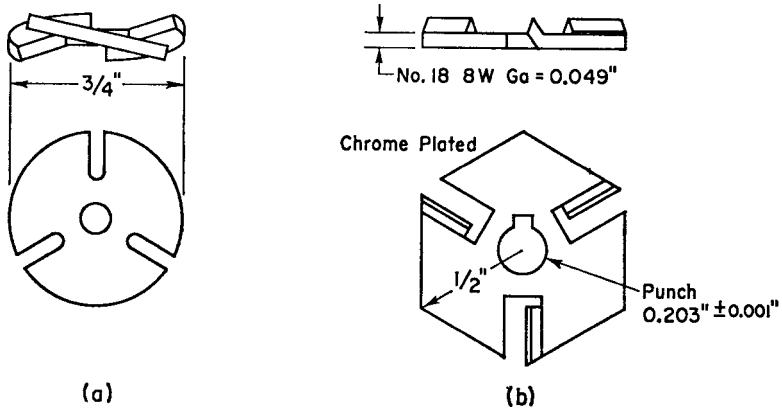

Metric Equivalents					
in.	0.001	0.049	0.203	½	¾
mm	0.03	1.24	5.16	12.7	19.0

FIG. 1 Detail of Stirring Paddles

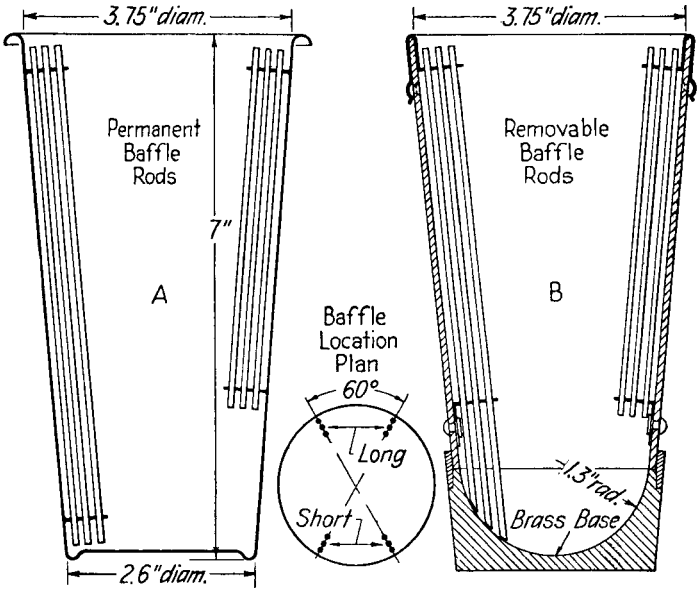

Metric Equivalents			
in.	1.3	2.6	3.75
mm	33	66	95.2

FIG. 2 Dispersion Cups of Apparatus

3-in. (75-mm)	No. 10 (2.00-mm)
2-in. (50-mm)	No. 20 (850-µm)
1½-in. (37.5-mm)	No. 40 (425-µm)
1-in. (25.0-mm)	No. 60 (250-µm)
¾-in. (19.0-mm)	No. 140 (106-µm)
⅜-in. (9.5-mm)	No. 200 (75-µm)
No. 4 (4.75-mm)	

NOTE 6—A set of sieves giving uniform spacing of points for the graph, as required in Section 17, may be used if desired. This set consists of the following sieves:

3-in. (75-mm)	No. 16 (1.18-mm)
1½-in. (37.5-mm)	No. 30 (600-µm)
¾-in. (19.0-mm)	No. 50 (300-µm)
⅜-in. (9.5-mm)	No. 100 (150-µm)
No. 4 (4.75-mm)	No. 200 (75-µm)
No. 8 (2.36-mm)	

3.7 *Water Bath or Constant-Temperature Room*—A water bath or constant-temperature room for maintaining the soil suspension at a constant temperature during the hydrometer analysis. A satisfactory water tank is an insulated tank that maintains the temperature of the suspension at a convenient constant temperature at or near 68°F (20°C). Such a device is illustrated in Fig. 4. In cases where the work is performed in a room at an automatically controlled constant temperature, the water bath is not necessary.

3.8 *Beaker*—A beaker of 250-mL capacity.

3.9 *Timing Device*—A watch or clock with a second hand.

4. Dispersing Agent

4.1 A solution of sodium hexametaphosphate (sometimes called sodium metaphosphate) shall be used in distilled or demineralized water, at the rate of 40 g of sodium hexametaphosphate/litre of solution (Note 7).

NOTE 7—Solutions of this salt, if acidic, slowly revert or hydrolyze back to the orthophosphate form with a resultant decrease in dispersive action. Solutions should be prepared frequently (at least once a month) or adjusted to pH of 8 or 9 by means of sodium carbonate. Bottles containing solutions should have the date of preparation marked on them.

4.2 All water used shall be either distilled or demineralized water. The water for a hydrometer test shall be brought to the temperature that is expected to prevail during the hydrometer test. For example, if the sedimentation cylinder is to be placed in the water bath, the distilled or demineralized water to be used shall be brought to the temperature of the controlled water bath; or, if the sedimentation cylinder is used in a room with controlled temperature, the water for the test shall be at the temperature of the room. The basic temperature for the hydrometer test is 68°F (20°C). Small variations of temperature do not introduce differences that are of practical significance and do not prevent the use of corrections derived as prescribed.

5. Test Sample

5.1 Prepare the test sample for mechanical analysis as outlined in Practice D 421. During the preparation procedure

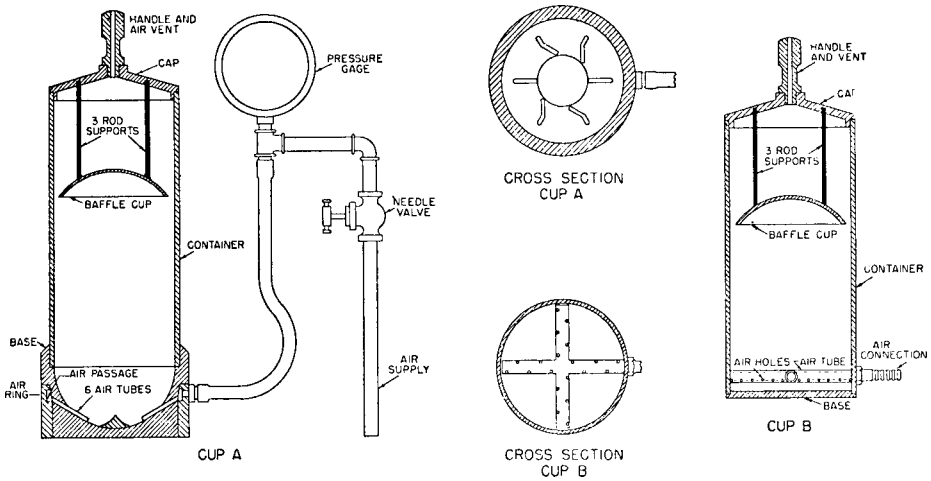

FIG. 3 Air-Jet Dispersion Cups of Apparatus B

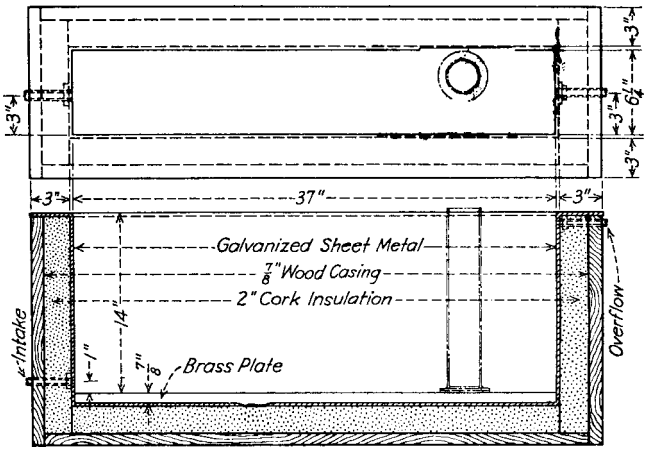

Metric Equivalents

in.	⅞	1	3	6¼	14	37
mm	22.2	25.4	76.2	158.2	356	940

FIG. 4 Insulated Water Bath

the sample is divided into two portions. One portion contains only particles retained on the No. 10 (2.00-mm) sieve while the other portion contains only particles passing the No. 10 sieve. The mass of air-dried soil selected for purpose of tests, as prescribed in Practice D 421, shall be sufficient to yield quantities for mechanical analysis as follows:

5.1.1 The size of the portion retained on the No. 10 sieve shall depend on the maximum size of particle, according to the following schedule:

Nominal Diameter of Largest Particles, in. (mm)	Approximate Minimum Mass of Portion, g
⅜ (9.5)	500
¾ (19.0)	1000
1 (25.4)	2000
1½ (38.1)	3000
2 (50.8)	4000
3 (76.2)	5000

5.1.2 The size of the portion passing the No. 10 sieve shall be approximately 115 g for sandy soils and approximately 65 g for silt and clay soils.

5.2 Provision is made in Section 5 of Practice D 421 for weighing of the air-dry soil selected for purpose of tests, the separation of the soil on the No. 10 sieve by dry-sieving and washing, and the weighing of the washed and dried fraction retained on the No. 10 sieve. From these two masses the percentages retained and passing the No. 10 sieve can be calculated in accordance with 12.1.

NOTE 8—A check on the mass values and the thoroughness of pulverization of the clods may be secured by weighing the portion passing the No. 10 sieve and adding this value to the mass of the washed and oven-dried portion retained on the No. 10 sieve.

SIEVE ANALYSIS OF PORTION RETAINED ON NO. 10 (2.00-mm) SIEVE

6. Procedure

6.1 Separate the portion retained on the No. 10 (2.00-mm) sieve into a series of fractions using the 3-in. (75-mm), 2-in.

(50-mm), 1½-in. (37.5-mm), 1-in. (25.0-mm), ¾-in. (19.0-mm), ⅜-in. (9.5-mm), No. 4 (4.75-mm), and No. 10 sieves, or as many as may be needed depending on the sample, or upon the specifications for the material under test.

6.2 Conduct the sieving operation by means of a lateral and vertical motion of the sieve, accompanied by a jarring action in order to keep the sample moving continuously over the surface of the sieve. In no case turn or manipulate fragments in the sample through the sieve by hand. Continue sieving until not more than 1 mass % of the residue on a sieve passes that sieve during 1 min of sieving. When mechanical sieving is used, test the thoroughness of sieving by using the hand method of sieving as described above.

6.3 Determine the mass of each fraction on a balance conforming to the requirements of 3.1. At the end of weighing, the sum of the masses retained on all the sieves used should equal closely the original mass of the quantity sieved.

HYDROMETER AND SIEVE ANALYSIS OF PORTION PASSING THE NO. 10 (2.00-mm) SIEVE

7. Determination of Composite Correction for Hydrometer Reading

7.1 Equations for percentages of soil remaining in suspension, as given in 14.3, are based on the use of distilled or demineralized water. A dispersing agent is used in the water, however, and the specific gravity of the resulting liquid is appreciably greater than that of distilled or demineralized water.

7.1.1 Both soil hydrometers are calibrated at 68°F (20°C), and variations in temperature from this standard temperature produce inaccuracies in the actual hydrometer readings. The amount of the inaccuracy increases as the variation from the standard temperature increases.

7.1.2 Hydrometers are graduated by the manufacturer to be read at the bottom of the meniscus formed by the liquid on the stem. Since it is not possible to secure readings of soil suspensions at the bottom of the meniscus, readings must be taken at the top and a correction applied.

7.1.3 The net amount of the corrections for the three items enumerated is designated as the composite correction, and may be determined experimentally.

7.2 For convenience, a graph or table of composite corrections for a series of 1° temperature differences for the range of expected test temperatures may be prepared and used as needed. Measurement of the composite corrections may be made at two temperatures spanning the range of expected test temperatures, and corrections for the intermediate temperatures calculated assuming a straight-line relationship between the two observed values.

7.3 Prepare 1000 mL of liquid composed of distilled or demineralized water and dispersing agent in the same proportion as will prevail in the sedimentation (hydrometer) test. Place the liquid in a sedimentation cylinder and the cylinder in the constant-temperature water bath, set for one of the two temperatures to be used. When the temperature of the liquid becomes constant, insert the hydrometer, and, after a short interval to permit the hydrometer to come to the temperature of the liquid, read the hydrometer at the top of the meniscus formed on the stem. For hydrometer 151H the composite correction is the difference between this reading and one; for hydrometer 152H it is the difference between the reading and zero. Bring the liquid and the hydrometer to the other temperature to be used, and secure the composite correction as before.

8. Hygroscopic Moisture

8.1 When the sample is weighed for the hydrometer test, weigh out an auxiliary portion of from 10 to 15 g in a small metal or glass container, dry the sample to a constant mass in an oven at 230 ± 9°F (110 ± 5°C), and weigh again. Record the masses.

9. Dispersion of Soil Sample

9.1 When the soil is mostly of the clay and silt sizes, weigh out a sample of air-dry soil of approximately 50 g. When the soil is mostly sand the sample should be approximately 100 g.

9.2 Place the sample in the 250-mL beaker and cover with 125 mL of sodium hexametaphosphate solution (40 g/L). Stir until the soil is thoroughly wetted. Allow to soak for at least 16 h.

9.3 At the end of the soaking period, disperse the sample further, using either stirring apparatus A or B. If stirring apparatus A is used, transfer the soil-water slurry from the beaker into the special dispersion cup shown in Fig. 2, washing any residue from the beaker into the cup with distilled or demineralized water (Note 9). Add distilled or demineralized water, if necessary, so that the cup is more than half full. Stir for a period of 1 min.

NOTE 9—A large size syringe is a convenient device for handling the water in the washing operation. Other devices include the wash-water bottle and a hose with nozzle connected to a pressurized distilled water tank.

9.4 If stirring apparatus B (Fig. 3) is used, remove the cover cap and connect the cup to a compressed air supply by means of a rubber hose. A air gage must be on the line between the cup and the control valve. Open the control valve so that the gage indicates 1 psi (7 kPa) pressure (Note 10). Transfer the soil-water slurry from the beaker to the air-jet dispersion cup by washing with distilled or demineralized water. Add distilled or demineralized water, if necessary, so that the total volume in the cup is 250 mL, but no more.

NOTE 10—The initial air pressure of 1 psi is required to prevent the soil-water mixture from entering the air-jet chamber when the mixture is transferred to the dispersion cup.

9.5 Place the cover cap on the cup and open the air control valve until the gage pressure is 20 psi (140 kPa). Disperse the soil according to the following schedule:

Plasticity Index	Dispersion Period, min
Under 5	5
6 to 20	10
Over 20	15

Soils containing large percentages of mica need be dispersed for only 1 min. After the dispersion period, reduce the gage pressure to 1 psi preparatory to transfer of soil-water slurry to the sedimentation cylinder.

10. Hydrometer Test

10.1 Immediately after dispersion, transfer the soil-water slurry to the glass sedimentation cylinder, and add distilled or demineralized water until the total volume is 1000 mL.

10.2 Using the palm of the hand over the open end of the cylinder (or a rubber stopper in the open end), turn the cylinder upside down and back for a period of 1 min to complete the agitation of the slurry (Note 11). At the end of 1 min set the cylinder in a convenient location and take hydrometer readings at the following intervals of time (measured from the beginning of sedimentation), or as many as may be needed, depending on the sample or the specification for the material under test: 2, 5, 15, 30, 60, 250, and 1440 min. If the controlled water bath is used, the sedimentation cylinder should be placed in the bath between the 2- and 5-min readings.

NOTE 11—The number of turns during this minute should be approximately 60, counting the turn upside down and back as two turns. Any soil remaining in the bottom of the cylinder during the first few turns should be loosened by vigorous shaking of the cylinder while it is in the inverted position.

10.3 When it is desired to take a hydrometer reading, carefully insert the hydrometer about 20 to 25 s before the reading is due to approximately the depth it will have when the reading is taken. As soon as the reading is taken, carefully remove the hydrometer and place it with a spinning motion in a graduate of clean distilled or demineralized water.

NOTE 12—It is important to remove the hydrometer immediately after each reading. Readings shall be taken at the top of the meniscus formed by the suspension around the stem, since it is not possible to secure readings at the bottom of the meniscus.

10.4 After each reading, take the temperature of the suspension by inserting the thermometer into the suspension.

11. Sieve Analysis

11.1 After taking the final hydrometer reading, transfer the suspension to a No. 200 (75-µm) sieve and wash with tap water until the wash water is clear. Transfer the material on the No. 200 sieve to a suitable container, dry in an oven at 230 ± 9°F (110 ± 5°C) and make a sieve analysis of the portion retained, using as many sieves as desired, or required for the material, or upon the specification of the material under test.

CALCULATIONS AND REPORT

12. Sieve Analysis Values for the Portion Coarser than the No. 10 (2.00-mm) Sieve

12.1 Calculate the percentage passing the No. 10 sieve by dividing the mass passing the No. 10 sieve by the mass of soil originally split on the No. 10 sieve, and multiplying the result by 100. To obtain the mass passing the No. 10 sieve, subtract the mass retained on the No. 10 sieve from the original mass.

12.2 To secure the total mass of soil passing the No. 4 (4.75-mm) sieve, add to the mass of the material passing the No. 10 sieve the mass of the fraction passing the No. 4 sieve and retained on the No. 10 sieve. To secure the total mass of soil passing the ⅜-in. (9.5-mm) sieve, add to the total mass of soil passing the No. 4 sieve, the mass of the fraction passing the ⅜-in. sieve and retained on the No. 4 sieve. For the remaining sieves, continue the calculations in the same manner.

12.3 To determine the total percentage passing for each sieve, divide the total mass passing (see 12.2) by the total mass of sample and multiply the result by 100.

13. Hygroscopic Moisture Correction Factor

13.1 The hydroscopic moisture correction factor is the ratio between the mass of the oven-dried sample and the air-dry mass before drying. It is a number less than one, except when there is no hygroscopic moisture.

14. Percentages of Soil in Suspension

14.1 Calculate the oven-dry mass of soil used in the hydrometer analysis by multiplying the air-dry mass by the hygroscopic moisture correction factor.

14.2 Calculate the mass of a total sample represented by the mass of soil used in the hydrometer test, by dividing the oven-dry mass used by the percentage passing the No. 10 (2.00-mm) sieve, and multiplying the result by 100. This value is the weight W in the equation for percentage remaining in suspension.

14.3 The percentage of soil remaining in suspension at the level at which the hydrometer is measuring the density of the suspension may be calculated as follows (Note 13): For hydrometer 151H:

$$P = [(100\,000/W)\,[m|]P5\,G/(G - G_1)](R - G_1) \quad (1)$$

NOTE 13—The bracketed portion of the equation for hydrometer 151H is constant for a series of readings and may be calculated first and then multiplied by the portion in the parentheses.

For hydrometer 152H:

$$P = (Ra/W)\,[m|]P5\,100 \quad (2)$$

where:

a = correction faction to be applied to the reading of hydrometer 152H. (Values shown on the scale are computed using a specific gravity of 2.65. Correction factors are given in Table 1),

P = percentage of soil remaining in suspension at the level at which the hydrometer measures the density of the suspension,

R = hydrometer reading with composite correction applied (Section 7),

W = oven-dry mass of soil in a total test sample represented by mass of soil dispersed (see 14.2), g,

G = specific gravity of the soil particles, and

G_1 = specific gravity of the liquid in which soil particles are suspended. Use numerical value of one in both instances in the equation. In the first instance any possible variation produces no significant effect, and in the second instance, the composite correction for R is based on a value of one for G_1.

15. Diameter of Soil Particles

15.1 The diameter of a particle corresponding to the percentage indicated by a given hydrometer reading shall be calculated according to Stokes' law (Note 14), on the basis that a particle of this diameter was at the surface of the suspension at the beginning of sedimentation and had settled to the level at

TABLE 1 Values of Correction Factor, α, for Different Specific Gravities of Soil Particles[A]

Specific Gravity	Correction Factor[A]
2.95	0.94
2.90	0.95
2.85	0.96
2.80	0.97
2.75	0.98
2.70	0.99
2.65	1.00
2.60	1.01
2.55	1.02
2.50	1.03
2.45	1.05

[A]For use in equation for percentage of soil remaining in suspension when using Hydrometer 152H.

which the hydrometer is measuring the density of the suspension. According to Stokes' law: see Table 2

$$D = \sqrt{[30n/980(G - G_1)]\,[m|]P5\,L/T} \quad (3)$$

where:

D = diameter of particle, mm,
n = coefficient of viscosity of the suspending medium (in this case water) in poises (varies with changes in temperature of the suspending medium),
L = distance from the surface of the suspension to the level at which the density of the suspension is being measured, cm. (For a given hydrometer and sedimentation cylinder, values vary according to the hydrometer readings. This distance is known as effective depth (see Table 2)),
T = interval of time from beginning of sedimentation to the taking of the reading, min,
G = specific gravity of soil particles, and
G_1 = specific gravity (relative density) of suspending medium (value may be used as 1.000 for all practical purposes).

NOTE 14—Since Stokes' law considers the terminal velocity of a single sphere falling in an infinity of liquid, the sizes calculated represent the diameter of spheres that would fall at the same rate as the soil particles.

15.2 For convenience in calculations the above equation may be written as follows: see Table 3

$$D = K\sqrt{L/T} \quad (4)$$

where:

K = constant depending on the temperature of the suspension and the specific gravity of the soil particles. Values of K for a range of temperatures and specific gravities are given in Table 3. The value of K does not change for a series of readings constituting a test, while values of L and T do vary.

15.3 Values of D may be computed with sufficient accuracy, using an ordinary 10-in. slide rule.

NOTE 15—The value of L is divided by T using the A- and B-scales, the square root being indicated on the D-scale. Without ascertaining the value of the square root it may be multiplied by K, using either the C- or CI-scale.

TABLE 2 Values of Effective Depth Based on Hydrometer and Sedimentation Cylinder of Specified Sizes[A]

Hydrometer 151H		Hydrometer 152H			
Actual Hydrometer Reading	Effective Depth, L, cm	Actual Hydrometer Reading	Effective Depth, L, cm	Actual Hydrometer Reading	Effective Depth, L, cm
1.000	16.3	0	16.3	31	11.2
1.001	16.0	1	16.1	32	11.1
1.002	15.8	2	16.0	33	10.9
1.003	15.5	3	15.8	34	10.7
1.004	15.2	4	15.6	35	10.6
1.005	15.0	5	15.5		
1.006	14.7	6	15.3	36	10.4
1.007	14.4	7	15.2	37	10.2
1.008	14.2	8	15.0	38	10.1
1.009	13.9	9	14.8	39	9.9
1.010	13.7	10	14.7	40	9.7
1.011	13.4	11	14.5	41	9.6
1.012	13.1	12	14.3	42	9.4
1.013	12.9	13	14.2	43	9.2
1.014	12.6	14	14.0	44	9.1
1.015	12.3	15	13.8	45	8.9
1.016	12.1	16	13.7	46	8.8
1.017	11.8	17	13.5	47	8.6
1.018	11.5	18	13.3	48	8.4
1.019	11.3	19	13.2	49	8.3
1.020	11.0	20	13.0	50	8.1
1.021	10.7	21	12.9	51	7.9
1.022	10.5	22	12.7	52	7.8
1.023	10.2	23	12.5	53	7.6
1.024	10.0	24	12.4	54	7.4
1.025	9.7	25	12.2	55	7.3
1.026	9.4	26	12.0	56	7.1
1.027	9.2	27	11.9	57	7.0
1.028	8.9	28	11.7	58	6.8
1.029	8.6	29	11.5	59	6.6
1.030	8.4	30	11.4	60	6.5
1.031	8.1				
1.032	7.8				
1.033	7.6				
1.034	7.3				
1.035	7.0				
1.036	6.8				
1.037	6.5				
1.038	6.2				

[A]Values of effective depth are calculated from the equation:

$$L = L_1 + 1/2\,[L_2 - (V_B/A)] \quad (5)$$

where:

L = effective depth, cm,
L_1 = distance along the stem of the hydrometer from the top of the bulb to the mark for a hydrometer reading, cm,
L_2 = overall length of the hydrometer bulb, cm,
V_B = volume of hydrometer bulb, cm^3, and
A = cross-sectional area of sedimentation cylinder, cm^2

Values used in calculating the values in Table 2 are as follows:
For both hydrometers, 151H and 152H:
L_2 = 14.0 cm
V_B = 67.0 cm^3
A = 27.8 cm^2

For hydrometer 151H:
L_1 = 10.5 cm for a reading of 1.000
= 2.3 cm for a reading of 1.031

For hydrometer 152H:
L_1 = 10.5 cm for a reading of 0 g/litre
= 2.3 cm for a reading of 50 g/litre

16. Sieve Analysis Values for Portion Finer than No. 10 (2.00-mm) Sieve

16.1 Calculation of percentages passing the various sieves used in sieving the portion of the sample from the hydrometer test involves several steps. The first step is to calculate the mass of the fraction that would have been retained on the No. 10

TABLE 3 Values of K for Use in Equation for Computing Diameter of Particle in Hydrometer Analysis

Temperature,° C	Specific Gravity of Soil Particles								
	2.45	2.50	2.55	2.60	2.65	2.70	2.75	2.80	2.85
16	0.01510	0.01505	0.01481	0.01457	0.01435	0.01414	0.01394	0.01374	0.01356
17	0.01511	0.01486	0.01462	0.01439	0.01417	0.01396	0.01376	0.01356	0.01338
18	0.01492	0.01467	0.01443	0.01421	0.01399	0.01378	0.01359	0.01339	0.01321
19	0.01474	0.01449	0.01425	0.01403	0.01382	0.01361	0.01342	0.1323	0.01305
20	0.01456	0.01431	0.01408	0.01386	0.01365	0.01344	0.01325	0.01307	0.01289
21	0.01438	0.01414	0.01391	0.01369	0.01348	0.01328	0.01309	0.01291	0.01273
22	0.01421	0.01397	0.01374	0.01353	0.01332	0.01312	0.01294	0.01276	0.01258
23	0.01404	0.01381	0.01358	0.01337	0.01317	0.01297	0.01279	0.01261	0.01243
24	0.01388	0.01365	0.01342	0.01321	0.01301	0.01282	0.01264	0.01246	0.01229
25	0.01372	0.01349	0.01327	0.01306	0.01286	0.01267	0.01249	0.01232	0.01215
26	0.01357	0.01334	0.01312	0.01291	0.01272	0.01253	0.01235	0.01218	0.01201
27	0.01342	0.01319	0.01297	0.01277	0.01258	0.01239	0.01221	0.01204	0.01188
28	0.01327	0.01304	0.01283	0.01264	0.01244	0.01255	0.01208	0.01191	0.01175
29	0.01312	0.01290	0.01269	0.01249	0.01230	0.01212	0.01195	0.01178	0.01162
30	0.01298	0.01276	0.01256	0.01236	0.01217	0.01199	0.01182	0.01165	0.01149

sieve had it not been removed. This mass is equal to the total percentage retained on the No. 10 sieve (100 minus total percentage passing) times the mass of the total sample represented by the mass of soil used (as calculated in 14.2), and the result divided by 100.

16.2 Calculate next the total mass passing the No. 200 sieve. Add together the fractional masses retained on all the sieves, including the No. 10 sieve, and subtract this sum from the mass of the total sample (as calculated in 14.2).

16.3 Calculate next the total masses passing each of the other sieves, in a manner similar to that given in 12.2.

16.4 Calculate last the total percentages passing by dividing the total mass passing (as calculated in 16.3) by the total mass of sample (as calculated in 14.2), and multiply the result by 100.

17. Graph

17.1 When the hydrometer analysis is performed, a graph of the test results shall be made, plotting the diameters of the particles on a logarithmic scale as the abscissa and the percentages smaller than the corresponding diameters to an arithmetic scale as the ordinate. When the hydrometer analysis is not made on a portion of the soil, the preparation of the graph is optional, since values may be secured directly from tabulated data.

18. Report

18.1 The report shall include the following:

18.1.1 Maximum size of particles,

18.1.2 Percentage passing (or retained on) each sieve, which may be tabulated or presented by plotting on a graph (Note 16),

18.1.3 Description of sand and gravel particles:

18.1.3.1 Shape—rounded or angular,

18.1.3.2 Hardness—hard and durable, soft, or weathered and friable,

18.1.4 Specific gravity, if unusually high or low,

18.1.5 Any difficulty in dispersing the fraction passing the No. 10 (2.00-mm) sieve, indicating any change in type and amount of dispersing agent, and

18.1.6 The dispersion device used and the length of the dispersion period.

NOTE 16—This tabulation of graph represents the gradation of the sample tested. If particles larger than those contained in the sample were removed before testing, the report shall so state giving the amount and maximum size.

18.2 For materials tested for compliance with definite specifications, the fractions called for in such specifications shall be reported. The fractions smaller than the No. 10 sieve shall be read from the graph.

18.3 For materials for which compliance with definite specifications is not indicated and when the soil is composed almost entirely of particles passing the No. 4 (4.75-mm) sieve, the results read from the graph may be reported as follows:

(*1*) Gravel, passing 3-in. and retained on No. 4 sieve ..... %
(*2*) Sand, passing No. 4 sieve and retained on No. 200 sieve ..... %
(*a*) Coarse sand, passing No. 4 sieve and retained on No. 10 sieve ..... %
(*b*) Medium sand, passing No. 10 sieve and retained on No. 40 sieve ..... %
(*c*) Fine sand, passing No. 40 sieve and retained on No. 200 sieve ..... %
(*3*) Silt size, 0.074 to 0.005 mm ..... %
(*4*) Clay size, smaller than 0.005 mm ..... %
Colloids, smaller than 0.001 mm ..... %

18.4 For materials for which compliance with definite specifications is not indicated and when the soil contains material retained on the No. 4 sieve sufficient to require a sieve analysis on that portion, the results may be reported as follows (Note 17):

SIEVE ANALYSIS

Sieve Size	Percentage Passing
3-in.	.....
2-in.	.....
1½-in.	.....
1-in.	.....
¾-in.	.....
⅜-in.	.....
No. 4 (4.75-mm)	.....
No. 10 (2.00-mm)	.....
No. 40 (425-µm)	.....
No. 200 (75-µm)	.....
HYDROMETER ANALYSIS	
0.074 mm	.....
0.005 mm	.....
0.001 mm	.....

NOTE 17—No. 8 (2.36-mm) and No. 50 (300-µm) sieves may be substituted for No. 10 and No. 40 sieves.

19. Keywords

19.1 grain-size; hydrometer analysis; hygroscopic moisture; particle-size; sieve analysis

The American Society for Testing and Materials takes no position respecting the validity of any patent rights asserted in connection with any item mentioned in this standard. Users of this standard are expressly advised that determination of the validity of any such patent rights, and the risk of infringement of such rights, are entirely their own responsibility.

This standard is subject to revision at any time by the responsible technical committee and must be reviewed every five years and if not revised, either reapproved or withdrawn. Your comments are invited either for revision of this standard or for additional standards and should be addressed to ASTM Headquarters. Your comments will receive careful consideration at a meeting of the responsible technical committee, which you may attend. If you feel that your comments have not received a fair hearing you should make your views known to the ASTM Committee on Standards, at the address shown below.

This standard is copyrighted by ASTM, 100 Barr Harbor Drive, PO Box C700, West Conshohocken, PA 19428-2959, United States. Individual reprints (single or multiple copies) of this standard may be obtained by contacting ASTM at the above address or at 610-832-9585 (phone), 610-832-9555 (fax), or service@astm.org (e-mail); or through the ASTM website (www.astm.org).