2021

Michigan
Fur Harvester Digest

RAP (Report All Poaching): Call or Text (800) 292-7800

Michigan.gov/Trapping

Table of Contents

Furbearer Management **3**

Season Dates and Bag Limits **4**

License Types and Fees **6**
- License Types and Fees by Age 6
- Purchasing a License 6
- Apprentice & Youth Hunting 9
- Fur Harvester License 10
- Kill Tags, Registration, and Incidental Catch 11

When and Where to Hunt/Trap **14**
- Hunting Hours and Zone Boundaries 14
- Hunting and Trapping on Public Land 18
- Safety Zones, Right-of-Ways, Waterways 20
- Hunting and Trapping on Private Land 20

Equipment and Fur Harvester Rules **21**
- Use of Bait When Hunting and Trapping 21
- Hunting with Dogs 21
- Equipment Regulations 22
- Transporting, Buying and Selling Game 26
- Protected and Live Animal Restrictions 26
- Nighttime Furbearer Regulations 27
- Coyote Hunting 27
- Trapping Equipment Regulations 29
- Winter Fox and Coyote Non-lethal Cable Restraints 32
- Bobcat Hunting and Trapping 33
- Beaver and Otter Trapping 35

Wildlife Diseases and Invasive Species **38**
- Wildlife Diseases 38
- Invasive Species 39

Need information **40**

Stay on top of the latest news from the Michigan DNR!

Visit us at Michigan.gov/DNR to sign up for e-mail updates!

The Michigan Department of Natural Resources is committed to the conservation, protection, management, use and enjoyment of the state's natural and cultural resources for current and future generations.

The Michigan Natural Resources Commission (NRC) is a seven-member public body whose members are appointed by the governor and subject to the advice and consent of the Senate. The NRC has exclusive authority to regulate the taking of game and sportfish. The commission conducts monthly, public meetings in locations throughout Michigan. Citizens are encouraged to become actively involved in these public forums. For more information visit Michigan.gov/NRC.

NOTICE: This brochure is not a legal notice or a complete collection of hunting regulations and laws. It is a condensed digest issued for hunters convenience. Copies of Wildlife Conservation Orders, which contain complete listings of regulations and legal descriptions, are available on our website: Michigan.gov/DNRLaws.

Furbearer Management

Michigan has 17 species of furbearers that may be harvested. The term "furbearer" generally applies to those species that historically have been harvested for their fur. Furbearers found in Michigan are badger, bobcat, fisher, marten, fox (red and gray), coyote, weasels (least, short-tailed/ermine, and long-tailed), mink, raccoon, muskrat, beaver, otter, skunk, and opossum. Most of these species are carnivores, with a few notable exceptions such as beaver and muskrat.

Given the large number of furbearing species that can be hunted or trapped, there are many different types of recreational opportunities related to furbearers throughout the state. Fur harvesting has played an important role in the lives of many Michigan residents long before statehood and has continued to the present day.

The DNR monitors furbearer populations and regularly reviews regulations to ensure that furbearers are managed to sustain populations, maintain recreational opportunities, and allow for management of nuisance issues and damage control. Regulations are in place to ensure populations are not harvested in a way that may be unsustainable and to provide biologists information on species to aid in management (such as through mandatory registration).

For more information on the Furbearer Management Program in Michigan, visit Michigan.gov/Trapping.

Fur Harvester Season and Bag Limits 2021 – 2022

Season	Bag Limit	Area	Season Dates	Kill Tag & Mandatory Registration	Kill Tag Availability
Bobcat Hunting	2 per RESIDENT fur harvester. 2nd kill tag valid on private land in Unit A only. [1]	Units A, B & C Unit D Unit E & F	Jan. 1 – March 1 Jan. 1 – Feb. 1 Jan. 1 – Jan. 11	Yes (See page 11)	May 1–Nov. 30
Coyote Hunting	No limit	Statewide	Year-round	No	N/A
Fox (Gray and Red) Hunting	No limit	Statewide	Oct. 15 – March 1	No	N/A
Raccoon Hunting	No limit	Statewide	Oct. 1 – Jan. 31	No	N/A
Badger Trapping	1 per RESIDENT fur harvester	Zones 1* & 2 Zone 3	Oct. 15 – Nov. 14 Nov. 1 – March 1	No	N/A
Beaver Trapping (Resident)	No limit	Unit A Unit B Unit C	Oct. 25 – April 30 Nov. 1 – April 29 Nov. 10 – April 29	No	N/A
Beaver Trapping (Nonresident)	No limit	Unit A Unit B Unit C	Nov. 15 – April 30 Nov. 24 – April 29 Dec. 15 – April 29	No	N/A
Bobcat Trapping	2 per RESIDENT fur harvester. Second kill tag valid on private land in Unit A only. [1]	Units A and B Units C, D, E & F	Dec. 1 – Feb. 1 Dec. 10–20	Yes (See page 11)	May 1 – Nov. 30
Coyote and Fox (Gray and Red) Trapping	No limit	Statewide	Oct. 15 – March 1	No	N/A

Fisher and Marten Trapping	Combined bag limit of 2 per RESIDENT fur harvester, of which only 1 may be a fisher. [2]	Zone 1 – excluding Drummond Island	Dec. 3–12	Yes (See page 11)	May 1 – end of season
Muskrat and Mink Trapping	No limit	Zone 1 Zone 2 Zone 3	Oct. 25 – March 1 Nov. 1 – March 1 Nov. 10 – March 1	No	N/A
Otter Trapping	4 per RESIDENT fur harvester, only 3 may be taken from Unit B, and only 2 from Unit C.	Unit A Unit B Unit C	Oct. 25 – March 31 Nov. 1 – March 31 Nov. 10 – March 31	Yes (See page 11)	May 1 – end of season
Raccoon Trapping	No Limit	Statewide	Oct. 15 – March 31	No	N/A

Notes: *Zone 1 Badger management unit is: Baraga, Dickinson, Gogebic, Houghton, Iron, Keweenaw, Marquette, Menominee, and Ontonagon counties and that area of Alger and Delta counties west of a line beginning at the point on the Lake Superior shoreline due north of where Federal Forest Highway 13 and H-58 intersect, then southerly upon Federal Forest Highway 13 to where it intersects with U.S. 2, then due south of the intersection of Federal Forest Highway 13 and U.S. 2 to the point of intersection with the Lake Michigan shoreline.

[1] Bobcat: One kill tag is valid for all lands and for all units combined. A second kill tag is valid for Unit A ONLY, on private lands (excluding Commercial Forest lands).

[2] The fisher/marten kill tag can be used for one fisher OR one marten. The marten only kill tag can be used for one marten.

Year-Round Hunting Seasons 2021-2022

Opossums, porcupines, weasels, red squirrels, skunks, ground squirrels, woodchucks, and feral swine may be harvested year-round, statewide with a valid Michigan hunting license. There is no bag limit for these species.

Raccoons, skunks, woodchucks, and coyotes may be taken year-round, using otherwise lawful hunting or trapping methods, on private property and with landowner permission when doing or about to do damage. A license or written permission is not needed.

License Types and Fees by Age

License Type	Age: Up to 9 [1]	Junior Age: 10 – 16	Resident Age: 17+	Nonresident Age: 17+ [2]	Resident Senior Age: 65+
*[5] DNR Sportcard	$1.00	$1.00	$1.00	$1.00	$1.00
Mentored Youth License	$7.50	–	–	–	–
*[4] Base License – Valid through March 31, 2022		$6.00	$11.00	$151.00	$5.00
*[3] [1] Fur Harvester – Valid through April 30, 2022		$15.00	$15.00	$15.00	$6.00

*One dollar from each of these licenses will be used to educate the public on the benefits of hunting, fishing, and trapping in Michigan, and the impact of these activities on the conservation, preservation and management of the state's natural resources.

[1] Must be a resident, 8 years of age or older, to obtain kill tags for bobcat, otter, marten, or fisher.

[2] Nonresidents under 17 years of age may purchase resident licenses.

[3] Must purchase 2021 base license by Feb. 28, 2022 in order to purchase a fur harvester license in March or April 2022.

[4] The 2022 base license is available for purchase beginning March 1, 2022.

[5] The DNR Sportcard is not required if you have a valid state-issued driver license or ID card.

Purchasing a License

What do I need to purchase a license?

You must have one of the following forms of identification:

- Valid Michigan driver's license or valid nonresident driver's license.
- State of Michigan ID card (issued by the Secretary of State).
- DNR Sportcard (issued through license agents or at Michigan.gov/DNRLicenses). If the information on your DNR Sportcard from the previous year is still accurate, you should continue to use it.

Hunters must possess qualifying credentials and/or identification that may be required for certain license purchases. **When hunting or trapping, you must carry**

your license and present upon demand of a Michigan conservation officer, a tribal conservation officer, or any law enforcement officer.

Where can I purchase Michigan hunting licenses?
You can purchase Michigan hunting and fishing licenses online at Michigan.gov/DNRLicenses or in person at any agent that sells Michigan licenses. A list of license agents is available at Michigan.gov/DNR under Buy & Apply.

Do I need a base license?
Yes, a valid base license is needed to purchase a fur harvester license.
The base license provides funding for habitat and conservation work on both public and private land and supports the work of conservation officers and field staff to ensure safe, legal hunting practices are followed. The base license is valid for hunting small game. Additional licenses are required to hunt other species. Hunters are always encouraged to carry their base license when hunting.

Do I need to take hunter safety?
Yes, all hunters born on or after Jan. 1, 1960 must present their hunter safety certificate or previous hunting license (other than an apprentice license) to purchase their licenses.

Michigan's hunter education courses are offered year-round throughout the state. The online course can be found at Michigan.gov/HunterEducation.

I cannot find my hunter safety certificate; can I get a replacement?
For a replacement Michigan hunter safety certificate, visit Michigan.gov/RecreationalSafety.

Do I need to take a trapper education course?
Michigan's trapper education course is voluntary but strongly recommended for those who are new to trapping. Safe hunting and trapping begin with education. For more information on classes currently offered in your area, please visit the DNR website at Michigan.gov/HunterEducation.

Who qualifies for a Michigan resident hunting or fur harvester license?
To qualify for any adult resident hunting or fur harvester license, you must meet one of the following criteria:

- Reside in a settled or permanent home or domicile within the boundaries of this state with the intention of remaining in this state. The ownership of land in Michigan by itself is not a qualification for a resident license. "Resident" status can only be claimed in one state.
- Be a full-time student at a Michigan college or university and reside in the state during the school year.
- Serve full time in the U.S. military and be officially stationed in Michigan.
- Serve full time in the U.S. military and maintain residency in Michigan.

What do I do if I lost my license?
If you originally purchased at a license agent or on elicense, you may visit a license agent and have your license(s) reprinted. ($3 for non kill-tag license replacement and full price for kill-tag license replacement.) You must provide the identification number used to purchase the original license.

If you originally purchased online, you received an e-mail containing a PDF file of printable licenses, including your base license. Save your PDF so it can be reprinted if misplaced.

If you no longer have your PDF file, you may log in to your elicense account and access your purchase history to reprint any non kill-tag licenses.

I am U.S. military personnel; do I pay full price?
Hunting and fur harvester license fees are waived for all full-time, active-duty U.S. military personnel who have maintained resident status, except for hunting licenses obtained through a drawing. The individual must present military ID, leave papers, duty papers, military orders or other evidence verifying that he or she is an active-duty member of the military, along with a valid Michigan driver's license or voter's registration card.

I am a Michigan veteran with a disability; do I get a discount?
A resident veteran with a service-connected disability is eligible to obtain any hunting and fur harvester license that does not require a separate application free of charge, if one of the following conditions is met:

- The person has been determined by the United States Department of Veterans Affairs to be permanently and totally disabled as a result of military service and entitled to veterans' benefits at the 100-percent rate, for disabilities other than blindness.
- The person has been rated by the United States Department of Veterans Affairs as individually unemployable.

Documentation of eligibility from the Veterans Administration stating either of the above conditions must be in the possession of a veteran when obtaining free licenses and while afield.

See the Hunting Digest or visit Michigan.gov/DNR for more information for hunters with disabilities.

Can I hunt with someone who is a member of a federally recognized tribe hunting under treaty-authorized regulations?
A person accompanying a hunter lawfully engaged in treaty-authorized hunting may not harvest a game animal unless also lawfully licensed as a treaty-authorized hunter or as a state-licensed hunter for the applicable species and season.

Apprentice & Youth Hunting

I do not have a hunter safety certificate but would like to try hunting before I take the course; how can I do that?
If you do not have a hunter safety certificate and are 10 years of age or older, you may purchase a base apprentice (APC) license. An apprentice hunter may purchase this license for two license years before he or she must successfully complete a hunter safety course. Additional licenses are required to hunt big game, furbearers and waterfowl. The base apprentice license is available to both residents and nonresidents.

When afield, an apprentice hunter must be accompanied by someone 21 years of age or older who possesses a regular current-year hunting license for the same game as the apprentice. For apprentices 10-16 years of age, the accompanying hunter must be the apprentice's parent, guardian, or someone designated by the parent or guardian. **"Accompanied by"** requires the accompanying hunter to be able to come to the immediate aid of the apprentice and stay within a distance that permits uninterrupted, unaided visual and verbal contact. A person may accompany no more than two apprentice hunters while hunting. Apprentice hunters are exempt from antler point restrictions during all deer seasons, in all regions, and for all deer licenses.

What is the Mentored Youth Hunting (MYH) Program?
The MYH Program allows youth hunters 9 years of age and younger to hunt with a mentor who is at least 21 years of age, has hunting experience and possesses a valid Michigan license to hunt other than an apprentice license.

What species can be harvested with a mentored youth hunting license?
The mentored youth license is a "package" license to hunt small game, waterfowl, turkey (spring and fall) and deer, trap furbearers and fish for all species. It also allows the mentored youth hunter to apply for or purchase additional licenses including antlerless deer, bear, elk and fall turkey.

Youth may also harvest furbearers on public lands and private or Commercial Forest lands. Youth residents, 8 years of age or older, may obtain kill tags for bobcat, otter, marten, or fisher.

The MYH license and kill tags will remain valid for the duration of the license year, even if the mentored youth turns 10 years old during the year.

What equipment can a mentored youth hunter use?
Youth may hunt using archery, crossbow or firearm equipment. Any hunting device possessed by a mentored youth must be sized appropriately to fit the physical abilities of the youth.

What equipment can a mentor carry in the field when mentoring?
The mentor is limited to two hunting devices (shotgun, rifle, bow, or crossbow) in the field while mentoring, and the youth hunter must always be within arm's length of the mentor. The mentor will be held responsible for all actions of the youth hunter while in the field.

What are the rules for a youth hunter 10–16 years of age that has taken hunter safety?
Youth 10-16 years of age who are hunter safety-certified must be accompanied by an adult 18 years of age or older to hunt, unless:

- The youth is hunting on land on which a parent or guardian regularly resides; AND
- The license is not an apprentice license.

Youth 10-16 years of age who are NOT hunter safety-certified may hunt as an apprentice hunter. Nonresidents up to 16 years of age may purchase resident and junior licenses but are not eligible to obtain kill tags for fisher, otter, marten and bobcat.

Fur Harvester License

What species can I harvest with my fur harvester license?
A fur harvester license allows **residents** to hunt fox, opossum, skunk, weasel, bobcat, coyote and raccoon and trap badger, bobcat, fisher, marten, fox, coyote, weasel, mink, raccoon, muskrat, beaver, otter, skunk and opossum.

Nonresidents, including nonresident youth, with a valid fur harvester license can harvest the species listed above EXCEPT they may not harvest bobcat, otter, fisher, marten or badger.

Can I hunt coyotes with just a base license?
Michigan residents may HUNT coyote with a base license; however, residents hunting coyote Nov. 10-14 must have a fur harvester license. Residents trapping coyotes must have a fur harvester license.

When is my fur harvester license valid?
Fur harvester licenses are valid May 1, 2021 – April 30, 2022. HOWEVER, to purchase a 2021 fur harvester license AFTER Feb. 28, 2022, you must have purchased a 2021 base license. If you do not purchase a 2021 base license by Feb. 28, 2022, you cannot purchase a fur harvester license in March or April 2022.

Kill Tags, Registration and Incidental Catch

Which species do I need a kill tag for?
Residents with a fur harvester license who intend to harvest bobcat, otter, fisher or marten must request free kill tags for these species.

- Kill tags are available May 1 through the last day of the trapping season for fisher, marten and otter.
- Bobcat kill tags are only available through Nov. 30.

Kill tags will be available from license agents, DNR Customer Service Centers or online. A person who harvests a bobcat, otter, fisher or marten should immediately validate the tag and attach the tag to the hide from the upper jaw through the eye socket or through the lower jaw. The kill tag will be replaced by an official DNR seal at registration. For registration deadline dates, see page 12.

Which species do I need to bring to a furbearer registration station?
If you harvest bobcat, fisher, marten or otter, you must present the animal at a DNR registration station for registration.

What do I need to know before registering my furbearers?

- **Animals should be skinned prior to registration.**
- **The pelt and skull must be brought in to a DNR registration station for registration.**
- **The skull will be retained and will not be returned.**
- If possible, note township, range and section of harvest location (or mark the spot on a map).
- Hunters and trappers are strongly encouraged to call ahead to determine availability of DNR personnel and to make an appointment to register animals. A complete listing of available furbearer registration locations and hours is available at Michigan.gov/Trapping.

Can I register someone else's furbearers for them?
No, fur takers must register their own take. It is unlawful to register the take of another person. A taxidermist can skin the animal for you prior to registration if the animal has a completed and legal kill tag attached and it is within the registration period, but they cannot register it.

What will DNR staff do to register my furbearer?
The DNR will attach an official seal to the pelt of each animal. This seal replaces the furbearer kill tag. The location of take, date of harvest and manner of harvest will be recorded when the animal is sealed. The skull also will be collected to determine the sex and age of the specimen. **Skulls will be retained and will not be returned**. New population estimation techniques require precise sex and age information, which will be obtained from skulls. Mandatory skull collection ensures

Continued ▶

tooth samples are undamaged for aging and adequate material is available for DNA analysis. Ages for your bobcat, fisher, and marten can be found at Michigan.gov/DNRLab.

When can the seal be removed from my pelt?
Seals may be removed by a licensed taxidermist upon acceptance and recording of the specimen. Otherwise, seals shall not be removed until the pelt is processed or tanned, nor shall a person possess or transport a raw, unsealed hide after the required registration date for each animal. A person may not buy or sell a bobcat, fisher, marten, or otter pelt without a DNR seal unless the pelt has been processed or tanned.

Can I take my furbearer to a taxidermist before registration to have it skinned?
Yes, if you intend to have a taxidermist skin your animal, **you may take it to the taxidermist PRIOR to registration IF you are within the deadline for registration.** The animal should have the kill tag attached. After the animal has been skinned, you must bring the skull, pelt and kill tag to a DNR registration station for registration. After registration the sealed pelt may be returned to the taxidermist if additional work will be done on the pelt. An unsealed animal/pelt cannot be at a taxidermist after the registration deadline for that species/season.

What are the deadlines to register furbearers?

- Bobcat trapping season: Unit A and B on or before Feb. 11, 2022. Units C, D, E and F on or before Dec. 30, 2021.
- Bobcat hunting season: Units A, B and C on or before March 11, 2022. Unit D, on or before Feb. 11, 2022. Units E and F on or before Jan. 21, 2022.
- Fisher: On or before Dec. 15, 2021.
- Marten: On or before Dec. 15, 2021.
- Otter: Units A, B and C on or before April 10, 2022.
- Incidental catches: You must bring the entire carcass and pelt. The carcass and pelt must be surrendered.

What do I do with an incidental catch or nontarget species in my trap?
Trappers occasionally trap nontarget species. It is unlawful to possess animals out of season animals over the bag limit or to trap nongame protected species. Otter incidentally taken while trapping for beaver through April 30 may be lawfully possessed if included within the otter season bag limit and a valid otter kill tag is used. All rules and regulations for taking otter apply. For otter incidentally taken while trapping for beaver through April 30 and included in the otter season bag limit, the registration deadline is May 4, 2022. Otters incidentally taken above the individual's bag limit shall NOT be kept but shall be submitted to the DNR following existing incidental catch regulations. The following procedure is required for nongame protected species and those furbearers with a bag limit (bobcat, badger, fisher, marten, otter).

Trappers must:

- Immediately release live protected animals from the trap.
- If the animal is dead or dies in the attempt to release it, attach a Michigan incidental seal to the animal before removing it from the trap. Then transport the carcass in an open manner to the nearest DNR office. The carcass must be surrendered.
- Michigan incidental seals are available from DNR offices and should be picked up prior to trapping activity.
- All incidental seals remain the property of the DNR and must be returned by May 1 each year.

Hunting Hours and Zone Boundaries

When are legal hunting hours?
Shown is a map of the hunting-hour time zones. Actual legal hunting hours for furbearers for Time Zone A are shown in the table to the right. To determine the opening (a.m.) and closing (p.m.) time for any day in another time zone, add the minutes shown below to the times listed in the Time Zone A Hunting Hours Table. The hunting hours listed in the table reflect Eastern Standard Time, with an adjustment for daylight saving time. If you are hunting or trapping in Gogebic, Iron, Dickinson, or Menominee counties (Central Standard Time), you must make an additional adjustment to the printed time by subtracting one hour.

Zone A Hunting Hours

Note: Hunting hours listed are one-half hour before sunrise to one-half hour after sunset (adjusted for daylight saving time).

Zone D counties (Central Standard Time); subtract one hour from table:
• Gogebic • Iron • Dickinson • Menominee

Zone A Hunting Hours Table (September - November)

Date	Time Zone A a.m.	Time Zone A p.m.
Sept. 1	6:27	8:38
Sept. 2	6:28	8:36
Sept. 3	6:29	8:34
Sept. 4	6:31	8:32
Sept. 5	6:32	8:31
Sept. 6	6:33	8:29
Sept. 7	6:34	8:27
Sept. 8	6:35	8:26
Sept. 9	6:36	8:24
Sept. 10	6:37	8:22
Sept. 11	6:38	8:20
Sept. 12	6:39	8:19
Sept. 13	6:40	8:17
Sept. 14	6:41	8:15
Sept. 15	6:42	8:13
Sept. 16	6:43	8:12
Sept. 17	6:44	8:10
Sept. 18	6:45	8:08
Sept. 19	6:46	8:06
Sept. 20	6:47	8:04
Sept. 21	6:48	8:03
Sept. 22	6:50	8:01
Sept. 23	6:51	7:59
Sept. 24	6:52	7:57
Sept. 25	6:53	7:56
Sept. 26	6:54	7:54
Sept. 27	6:55	7:52
Sept. 28	6:56	7:50
Sept. 29	6:57	7:49
Sept. 30	6:58	7:47

Date	Time Zone A a.m.	Time Zone A p.m.
Oct. 1	6:59	7:45
Oct. 2	7:00	7:43
Oct. 3	7:01	7:42
Oct. 4	7:03	7:40
Oct. 5	7:04	7:38
Oct. 6	7:05	7:36
Oct. 7	7:06	7:35
Oct. 8	7:07	7:33
Oct. 9	7:08	7:31
Oct. 10	7:09	7:30
Oct. 11	7:10	7:32
Oct. 12	7:12	7:26
Oct. 13	7:13	7:25
Oct. 14	7:14	7:23
Oct. 15	7:15	7:21
Oct. 16	7:16	7:20
Oct. 17	7:17	7:18
Oct. 18	7:19	7:17
Oct. 19	7:20	7:15
Oct. 20	7:21	7:14
Oct. 21	7:22	7:12
Oct. 22	7:23	7:11
Oct. 23	7:25	7:09
Oct. 24	7:26	7:08
Oct. 25	7:27	7:06
Oct. 26	7:28	7:05
Oct. 27	7:29	7:03
Oct. 28	7:30	7:02
Oct. 29	7:32	7:00
Oct. 30	7:33	6:59
Oct. 31	7:34	6:58

Date	Time Zone A a.m.	Time Zone A p.m.
Nov. 1	7:36	6:56
Nov. 2	7:37	6:55
Nov. 3	7:38	6:54
Nov. 4	7:39	6:53
Nov. 5	7:40	6:51
Nov. 6	7:42	6:50
Nov. 7	6:43	5:49
Nov. 8	6:44	5:48
Nov. 9	6:46	5:47
Nov. 10	6:47	5:46
Nov. 11	6:48	5:45
Nov. 12	6:50	5:44
Nov. 13	6:51	5:43
Nov. 14	6:52	5:42
Nov. 15	6:53	5:41
Nov. 16	6:54	5:40
Nov. 17	6:55	5:39
Nov. 18	6:57	5:38
Nov. 19	6:58	5:38
Nov. 20	6:59	5:37
Nov. 21	7:00	5:36
Nov. 22	7:02	5:35
Nov. 23	7:03	5:35
Nov. 24	7:04	5:34
Nov. 25	7:05	5:34
Nov.26	7:06	5:33
Nov. 27	7:07	5:32
Nov. 28	7:08	5:32
Nov. 29	7:10	5:32
Nov. 30	7:11	5:31

Continued ▶

Zone A Hunting Hours Table (December)

Date	Time Zone A a.m.	Time Zone A p.m.
Dec. 1	7:12	5:31
Dec. 2	7:13	5:31
Dec. 3	7:14	5:30
Dec. 4	7:15	5:30
Dec. 5	7:16	5:30
Dec. 6	7:17	5:30
Dec. 7	7:18	5:30
Dec. 8	7:19	5:30
Dec. 9	7:20	5:30
Dec. 10	7:20	5:30
Dec. 11	7:21	5:30
Dec. 12	7:22	5:30
Dec. 13	7:23	5:30
Dec. 14	7:24	5:30
Dec. 15	7:24	5:30
Dec. 16	7:25	5:31
Dec. 17	7:26	5:31
Dec. 18	7:26	5:31
Dec. 19	7:27	5:32
Dec. 20	7:28	5:32
Dec. 21	7:28	5:32
Dec. 22	7:29	5:33
Dec. 23	7:29	5:33
Dec. 24	7:30	5:34
Dec. 25	7:30	5:35
Dec. 26	7:30	5:35
Dec. 27	7:31	5:36
Dec. 28	7:31	5:37
Dec. 29	7:31	5:37
Dec. 30	7:31	5:38
Dec. 31	7:32	5:39

What are the hunting and trapping zone boundaries?
Michigan is divided into hunting and trapping zones 1-2-3; see map below. Zone 1 includes all of the Upper Peninsula. The dividing line between Zones 2 and 3 is from the Lake Michigan shoreline north of Muskegon Lake easterly on Memorial Drive to Ruddiman Drive to Lake Avenue, easterly on Lake Avenue to M-120 in North Muskegon, northeasterly on M-120 to M-20, easterly on M-20 to US-10, easterly on US-10 to Garfield Road in Bay County, northerly on Garfield Road to Pinconning Road, easterly on Pinconning Road to Seven Mile Road, northerly on Seven Mile Road to Lincoln School Road (County Road 25) in Arenac County, northerly on Lincoln School Road to M-61, easterly on M-61 to US-23, easterly on US-23 to center line of AuGres River, southerly along center line of AuGres River to Saginaw Bay, easterly 90 degrees east for 7 miles into Saginaw Bay, then northerly 78 degrees east to the International Boundary.

What is the limited firearm deer zone?
Michigan is divided into a northern zone and a southern limited firearm deer zone (see map), where only shotguns, certain firearms, and certain handguns may be used during and before the firearm deer season (see Equipment Regulations on page 23 for impacts to fur harvesting). The dividing line between the northern zone and the southern limited firearm deer zone is as follows: starting at a point on the Lake Michigan shoreline directly west of M-46, then easterly to M-46, then easterly along M-46 to US-131 at Cedar Springs, southerly on US-131 to M-57, easterly on M-57 to Montcalm Road on the Kent-Montcalm county line, southerly on Montcalm Road and the Kent-Ionia county line to M-44, easterly on M-44 to M-66, northerly on M-66 to M-57, easterly on M-57 to M-52 near Chesaning, northerly on M-52 to M-46, easterly on M-46 to M-47, northerly on M-47 to US10 west of Bay City, easterly on US-10 to I-75, northerly on I-75 and US-23 to Beaver Road (about 1 mile north of Kawkawlin), easterly to Saginaw Bay, north 50 degrees east to the International Boundary.

Hunting and Trapping on Public Land

Where do I find the rules for state lands?
You can find state land use rules at Michigan.gov/DNRLaws. Please keep in mind that you may NOT:

- Cut branches, limbs, trees or other vegetation for shooting lanes on public land.
- Block any gate, road or trail on public land.
- Camp on state land without a permit. Permits are free and are available online at Michigan.gov/Camping or at any DNR office. They must be posted at your campsite. A fee is charged for camping at designated campsites in state parks, recreation areas, state forest campgrounds and some state game areas.

Can I hunt and trap in state parks and recreation areas?
Yes, some parks and recreation areas are open to hunting and trapping. State parks are closed to hunting unless opened by law (see Michigan.gov/DNRLaws). State recreation areas are open to hunting unless closed by law.

You may not use a centerfire rifle or centerfire pistol to take an animal during nighttime hours in any state park or state recreation area.

Trapping within 50 feet of the mowed portions of developed areas within state recreation areas is prohibited.

Contact individual parks or recreation areas for current hunting and trapping regulations and any restrictions for those areas prior to hunting/trapping.

Are there any public-land trapping areas where a permit is required?

- Yes, a special permit is required to trap in the management areas listed below. Trapping season closure dates may vary. Contact area headquarters for details.
- Muskegon State Game Area: Trapping permits are required for beaver and otter and are available at the game area headquarters.
- Poel Island Waterfowl Refuge, Grand Haven State Game Area: Trapping permits are available at the Muskegon State Game Area headquarters.
- Fish Point State Wildlife Area: Trapping permits are available at the wildlife area headquarters.
- Nayanquing Point and Wigwam Bay state widllife areas: Trapping permits are available at the Nayanquing Point State Wildlife Area headquarters.
- Shiawassee River State Game Area: Trapping permits may be obtained at the St. Charles DNR field office. Trapping permits for the Shiawassee National Wildlife Refuge may be obtained from the refuge manager.
- Pte. Mouillee State Game Area: Trapping permits are available at the game area headquarters.

- Tobico Marsh Unit of Bay City State Park: Trapping permits are available at the headquarters.
- Crow Island State Game Area: Trapping permits are available at the DNR Bay City Customer Service Center.
- Harsens Island, St. Clair Flats Wildlife Area: Trapping permits are available at the wildlife area headquarters.

Where can I find places open to public hunting and trapping?

- The DNR has an interactive application called Mi-HUNT, which helps you plan your hunting, trapping, and outdoor recreation adventures. Check it out at Michigan.gov/MiHunt.
- The Hunting Access Program (HAP) is another resource that can be found on Mi-HUNT. HAP provides public access to private hunting lands. For more information about HAP, contact your local DNR office or visit Michigan.gov/HAP.
- Over 2.2 million acres of privately owned forests enrolled in the Commercial Forest (CF) Lands Program are accessible by foot to the public for hunting and trapping. Contact the DNR Forest Resources Division or visit Michigan.gov/Forestry for more information about CF property.
- Opportunities to hunt on National Forest lands (NF) may be available for the Hiawatha NF, Huron-Manistee NF and Ottawa NF. For more details and regulations, visit FS.fed.us.

Please be aware, it is unlawful to trap any species within Sleeping Bear Dunes National Lakeshore and Pictured Rocks National Lakeshore.

Do I need authorization to guide hunts on public land?

All commercial hunting guides using state-owned lands must receive written authorization. A commercial hunting guide operation provides guiding service to clients wanting to hunt game on state-owned lands in exchange for goods, services, money, barter or anything of value. Guides are required to meet the conditions of the written authorization. If you are a guide who utilizes state-owned lands, visit the DNR website at Michigan.gov/WildlifePermits or contact Casey Reitz at ReitzC@Michigan.gov or 517-284-6210 for more information.

Commercial guiding on National Forest (NF) lands requires a federal special use permit. Applications can be obtained through any NF office or by calling Hiawatha NF at 906-428-5800, Huron-Manistee NF at 231-775-5023 or Ottawa NF at 906-932-1330.

Safety Zones, Rights-of-Ways, Waterways

What are the safety zones around buildings when hunting with a firearm?
Safety zones are all areas within 150 yards (450 feet) of an occupied building, house or cabin, or any barn or other building used in a farm operation. No person may hunt with a firearm in a safety zone, or shoot at any wild animal or wild bird within a safety zone, without the written permission of the owner or occupant of the property. The safety zone applies to hunting only. It does not apply to indoor or outdoor shooting ranges, target shooting, law enforcement activities, or the lawful discharge of firearms for any nonhunting purpose.

Are there any townships with hunting or trapping restrictions?
Yes, some townships may be closed to hunting, trapping or the discharge of firearms. Please contact the local township office or local law enforcement agency to find out about restrictions.

Can I hunt or trap within a road right-of-way or a railroad right-of-way?
You may hunt and trap within a road right-of-way where the adjoining property is publicly owned. If the adjacent property is privately owned, you must have permission from the landowner. Railroad rights-of-way are private property. Trespassing on railroad property is a misdemeanor. You must have written permission from the railroad company to be exempt from trespass.

Can I set traps or float hunt along waterways?
Hunting and trapping are exclusive rights of landowner bordering the waterway and their invited guests. You must secure permission from the landowner before float hunting or setting traps along those waterways that are protected by the recreational trespass law. You may float hunt and trap on and along waterways that are surrounded by public land and open to hunting.

Hunting and Trapping on Private Land

Do I need permission to hunt or trap on someone's private land?
Yes. Trespassing is unlawful and erodes support for recreational hunting. Written or verbal permission is required from the landowner or leaseholder before you hunt on any farmlands or connected woodlots or on any posted private land or on any property that is fenced or enclosed. Hunters are required to produce their hunting license to landowners upon request.

What if the game animal I wounded goes onto private land?
If you wound an animal or bird and it runs or flies onto private property, you have no legal right to pursue it without permission of the landowner and would be subject to prosecution.

Use of Bait When Hunting and Trapping

Can I use wild game as bait when hunting and trapping?
Yes, fur harvesters may use the parts of game animals as bait if:

- The game used as bait was lawfully trapped or hunted and if it is the open season for the game being used as bait.
- Some game killed as the result of a motor vehicle collision may be used as bait. Visit Michigan.gov/RoadKillPermit for roadkill salvage permit information.

Can I use foothold traps near exposed bait?
Foothold traps may not be used to trap furbearers within 20 feet of bait that is visible from more than 4 feet above the bait.

- For the purposes of this regulation, bait is defined as: any animal or animal parts, including dead fish, EXCEPT:
    - ◊ Dried hide, fur, feathers or bones that are less than 36 square inches in size and entirely free of meat may be used as a visual attractant.
- Completely submerged foothold traps are exempt from this restriction.

Hunting with Dogs

Can I hunt with dogs?
Yes, bobcat, raccoon, opossum, fox, and coyote may be hunted with dogs during their respective open seasons. It is unlawful for any person to hunt with the aid of dogs from April 16 through July 7.

When can I train my hunting dogs?
Dogs only may be trained on game that may be lawfully taken with dogs from July 8 – April 15. Exception: Michigan residents may train dogs on fox on state lands in Zone 3 under special permit. For additional information on dog permits, contact Casey Reitz at 517-284-6210 or ReitzC@Michigan.gov.

How do I release a dog caught in a trap?
For information on how to release dogs from traps or cable restraints, go to Michigan.gov/Trapping and look under Additional Resources.

If my hunting dog runs on to private property, can I retrieve it?
Yes, a person not possessing a firearm, **unless previously prohibited by the landowner**, may enter on foot upon the property of another person for the sole purpose of retrieving a hunting dog. The person should not remain on the property beyond the reasonable time necessary to retrieve the dog.

If I hunt in the Upper Peninsula, should I be concerned about wolves?
Wolves will defend their territories and may attack other wolves, coyotes, and domestic dogs that are in their territory. Wolf attacks on domestic dogs are relatively rare, with most wolf-dog conflicts involving dogs that are trained or used for bear hunting due to the long distances those dogs travel, noises they make, and great distance away from humans.

How can I avoid potential problems with wolves and my dogs?
To minimize the conflict between wolves and dogs, it is best to avoid areas of recent wolf activity. Wolves will concentrate much of their activity around the den and meeting sites. These sites may vary from year to year and can change throughout the summer. Meeting sites are usually forest openings or edge areas, and often near water. They can be identified by a concentration of wolf tracks, droppings, and matted vegetation. It is best to do some scouting and look for wolf sign before releasing dogs. Be especially vigilant when starting dogs from a bait site, and make sure wolves have not been using the bait. If wolf sign, particularly the sign of wolf pups, is evident, move to another area before releasing dogs. Become familiar with coyote and dog tracks, so they can be correctly distinguished from wolf tracks. Consider adding bells or beepers to dog collars – this may reduce wolf attacks.

For more information, including locations where hunting dog conflicts with wolves have occurred, visit Michigan.gov/Wolves or contact the Marquette Customer Service Center at 906-228-6561.

What should I do if I suspect my dog has had a conflict with a wolf?
Report all suspected wolf-dog conflicts to the DNR immediately to allow a timely investigation. **To report a dog depredation, call the Report All Poaching hotline at: 800-292-7800.**

Wolf lethal control requirements are outlined at Michigan.gov/Wolves. Because the federal status of wolves has changed, and may continue to change, please contact a DNR office to inquire about current rules regarding lethal take of wolves if in the act of killing or wounding a dog.

Equipment Regulations

When do I need to wear hunter orange?
You must wear a cap, hat, vest, jacket or rain gear of hunter orange when taking game during the established daylight hunting hours from Aug. 15 through April 30. Hunter orange includes camouflage that is not less than 50 percent hunter orange. The garments that are hunter orange should be the hunter's outermost garment and should be visible from all sides of the hunter.

The hunter orange requirements do not apply to a person who is stationary and in the act of hunting bobcat, coyote, or fox. Hunter orange is NOT required year-round when nighttime hunting.

Can I hunt from a raised platform or tree stand?
You may hunt from a raised platform or tree stand if you are:

- Bow or crossbow hunter (all species).
- Fox, coyote, raccoon or opossum hunter (day or night).
- Bobcat hunter (day only).

All other firearm fur harvesters are prohibited from using a raised platform or tree stand.

Can I use a ground blind on public lands?
Yes, but there are restrictions on movability and building materials. Please see the current Hunting Digest, available at Michigan.gov/DNRDigests, for more details on tree stands and ground blinds.

Can I use a game call or decoys for hunting furbearers?
Yes, electronic calls, mouth calls or other types of game calls or predator calls may be used when hunting bobcat, coyote, fox, opossum and raccoon. Mechanical/electronic decoys may be used.

Can I hunt for furbearers during the Nov. 10–14 quiet period?
If you are fur harvesting, you may carry a shotgun with shotshells for hunting small game, but cannot possess buckshot, slugs, ball loads or cut shells during this time. Fur harvesters may also carry a rimfire firearm .22-caliber or smaller while actively hunting or checking trap lines during the open fur-bearing animal's season.

Can I use rifles in the limited firearm deer zone?
You may use a centerfire or rimfire rifle from Dec. 1 – Nov. 9 in the limited firearm deer zone during the open season for all species, except deer (see below), turkey and migratory game birds. Nighttime furbearer regulation restrictions apply.

Can I use a centerfire rifle to hunt coyotes?
Yes, centerfire rifles may be used to hunt coyotes during regular daytime hunting hours statewide when following all applicable regulations. For nighttime hunting regulations, please see the Nighttime Furbearer Regulations section on page 27.

Are there firearm restrictions I must follow during deer season (Nov. 15–30) when hunting or trapping furbearers?
Yes, the following restrictions must be followed:

- Coyote, fox, raccoon, and badger may be killed in traps by fur takers using .22 caliber or smaller rimfire firearms, except from Nov. 15-30 unless the firearm is loaded at the point of kill only.
- From Nov. 15-30, a .22 caliber or smaller rimfire rifle or handgun may be used to kill a raccoon while hunting with dogs between the hours of 7 p.m. and 6 a.m. Firearms must be loaded at the point of kill only.
- In the limited firearm deer zone, all hunters afield from Nov. 15-30, must abide by the following firearm restrictions or use a crossbow or a bow and arrow. Legal firearms are as follows:
    - ◊ A shotgun may have a smooth or rifled barrel and may be of any gauge.
    - ◊ A muzzleloading rifle or black powder handgun must be loaded with black powder or a commercially manufactured black powder substitute.
    - ◊ A conventional (smokeless powder) handgun must be .35-caliber or larger and loaded with straight-walled cartridges and may be single- or multiple-shot but cannot exceed a maximum capacity of nine rounds in the barrel and magazine combined.

- ◊ A .35-caliber or larger rifle loaded with straight-walled cartridges with a minimum case length of 1.16 inches and a maximum case length of 1.8 inches.
- ◊ A .35-caliber or larger air rifle or pistol charged only from an external high-compression power source.

Is there a shell capacity for shotguns and centerfire rifles?
You may not hunt with a semi-automatic shotgun or semi automatic rifle that can hold more than six shells in the barrel and magazine combined, unless it is a .22-caliber or smaller rimfire.

Can I use a fully automatic firearm?
No, fully automatic firearms may not be used.

Can I hunt furbearers with a crossbow?
Yes, a crossbow may be used during any season in which a firearm is allowed, for both big and small game. (Exceptions for deer hunting apply; see current Hunting Digest.)

How must I transport my firearm, crossbow or bow and arrows?
These rules apply whether your vehicle is parked, stopped or moving. Firearms must be unloaded in the barrel, and all arrows must be in a quiver, when a hunter is afield outside the legal hunting hours.

At all times when carried in or on a motor vehicle, including snowmobiles:

- Rifles, shotguns, muzzleloaders and other firearms must be unloaded in both barrel and magazine and enclosed in a case or carried in the trunk of a vehicle on private or public property, whether your vehicle is parked, stopped or moving.
- Crossbows, slingshots, and bows and arrows may be transported while operated on public land or on a highway, road or street if they meet one of the following requirements: unloaded and uncocked; enclosed in a case, or carried in the trunk of a vehicle.

At all times, when carried in or on an off-road vehicle (ORV):

- Rifles, shotguns, muzzleloaders, and other firearms must be unloaded in both barrel and magazine and enclosed in a case or unloaded and equipped with and made inoperative by a manufactured key-locked trigger-housing mechanism.
- Crossbows, slingshots, and bows and arrows must meet one of the following requirements: unloaded and uncocked; enclosed in a case or carried in the trunk of a vehicle.

At all times, when carried in or on a motor-propelled boat or sailboat:

- Rifles, shotguns, muzzleloaders and all other firearms must be unloaded in both barrel and magazine.

Exceptions:

- These rules do not apply to a pistol carried under authority of a concealed pistol license or properly carried under authority of a specific exception from the requirement of a concealed pistol license. See question about handgun below.
- A person holding a valid permit to hunt from a standing vehicle may transport or possess an uncased firearm with a loaded magazine on a personal assistive mobility device if the action is open.

Note: Muzzleloading firearms are considered unloaded when the cap is removed or priming powder is removed from the pan, or when the battery is removed on electronic systems. The ball and powder can remain in the barrel.

See the Hunting Digest or visit Michigan.gov/DNRLaws for ORV and snowmobile regulations.

Can I hunt with a handgun?
Yes, if following the rules listed below. The rules listed below may not apply to those having a concealed pistol license (CPL) or specifically exempt by law from a CPL and carrying their handgun in accordance with their license or exemption.

- A person must be at least 18 years of age to hunt with or possess a handgun.
- Handguns cannot be borrowed or loaned to another person other than provided for under the CPL.
- While in the field, handguns must be carried in plain view.
- Carrying a handgun in a holster in plain view is permitted.
- You may transport your registered handguns while en route to and from your hunting or target shooting area; however, handguns, including BB guns larger than .177 caliber and all pellet guns, must be unloaded, in the barrel and magazines, and in a closed case designed for the storage of firearms and cannot be readily accessible to any occupant of the vehicle.
- It is a crime for certain felons to possess ammunition and firearms, including rifles and shotguns, in Michigan.
- Nonresidents must have a CPL or a license to purchase, carry or transport issued by their home state in their possession in order to legally carry or transport a handgun in Michigan. For more information regarding statewide handgun regulations, obtaining a CPL or concealed weapons and firearms laws, contact your local police department.

What type of ammunition/shot should I use?
It is recommended that non-toxic ammunition be used whenever shooting a furbearing species, especially if carcasses are to be consumed by humans or wildlife, because of the possibility of lead poisoning.

Can I hunt from a vehicle?
No, you may not hunt or pursue wild animals from a car, snowmobile, aircraft, drone, motorboat, personal watercraft, ORV or other motorized vehicle or a sailboat. Special permits may apply; see the Hunting Digest or Michigan.gov/DNRAccessibility for more information for hunters with disabilities.

Are there methods I cannot use for hunting or trapping?

- Except as provided by the trapping rules outlined in this digest or by special permit, you may not use snares, traps, cages, nets, pitfalls, deadfalls, spears, drugs, poisons, chemicals, smoke, gas, explosives, ferrets, weasels, or mechanical devices other than firearms, crossbows, bows and arrows, or slingshots to take wild animals.
- You may not set fires to drive out game.
- You may not use cartridges containing tracer or explosive bullets.
- You may not hunt while under the influence of intoxicating alcohol or controlled substances.

Transporting, Buying and Selling

Can I ship hides and furs out of state?
All out-of-state shipments of raw hides or furs must be plainly marked on the outside of the package as to the contents. To export bobcat, otter, or wolf hides from the U.S., you need federal approval. For details, contact the U.S. Fish and Wildlife Service at 800-358-2104 or ManagementAuthority@FWS.gov.

Are there restrictions on transporting game?
You may transport your own and another person's lawfully taken game. You cannot destroy the identity or evidence of the sex of any furbearer while in the field or when transported in a motor vehicle.

Can I buy or sell furbearers?
Yes, the carcass and parts of fur-bearing animals lawfully taken during their open season, or lawfully imported from another state, territory or country, may be bought or sold. See Wildlife Conservation Order 4.3 for additional information on fur dealer's license requirements.

Protected and Live Animal Restrictions

What wildlife species are protected?
Eagles, hawks, owls, spotted fawns, spruce grouse, flying squirrels, wolverines, lynx, moose, cougars, cub bears, and sow bears accompanied by cubs may not be taken at any time. All nongame birds are protected, except starlings, house sparrows, and feral pigeons.

Can I be in possession of a live wild animal?
No, you may not possess live game or protected animals taken from the wild except under a permit issued by the DNR. A permit is required to rehabilitate a wild animal in Michigan. You may not possess a live bat, skunk, mute swan, feral swine, bear, moose or elk.

You may not bring live raccoon, skunk, wild rabbit or hare, feral swine, wild turkey or wild turkey hybrid or their eggs, or mute swan or their eggs into Michigan. You may not import or possess a lynx or cougar without an endangered species permit.

Nighttime Furbearer Regulations

Can I hunt furbearing species at night?
Yes, raccoon, opossum, fox (red and gray), and coyote may be hunted at night when following the regulations outlined in this section.

Species	Bag Limit	Area	Hunting Season Dates
Coyote	No limit	Statewide	Year-round
Fox (gray and red)	No limit	Statewide	Oct. 15 – March 1
Opossum	No limit	Statewide	Year-round
Raccoon	No limit	Statewide	Oct. 1 – Jan. 31

Should I use a call or the aid of dogs when hunting furbearers at night?
Nighttime hunters must use a game call or predator call or use the aid of dogs.

- Dogs cannot be used April 16 – July 7.
- When hunting with dogs, an individual may possess only a loaded firearm, a cocked crossbow, or a bow with a nocked arrow at the point of kill.

Can I hunt from an elevated platform at night?
Yes, coyote, fox, opossum, and raccoons may be hunted from an elevated platform at night.

What equipment can I use when hunting furbearers at night?
A licensed individual may travel afoot with ONLY: a bow and arrow; a crossbow; a pneumatic gun; a rimfire firearm .22 caliber or smaller; a shotgun with loads other than buckshot larger than size 3, slug or cut shell; or a centerfire rifle or centerfire pistol .269 caliber or smaller.

- Firearm restrictions during deer season(s) must be followed from Nov. 10–30. See Equipment Regulations on page 23.
- It is unlawful to use a centerfire rifle or centerfire pistol to take an animal during nighttime hours in any state park or state recreation area, and on public lands in the limited firearm deer zone.

- All fur harvesters taking a furbearing animal, day or night, from Nov. 10-14, must have a fur harvester license and must use a .22 or smaller caliber rimfire.

Can I use artificial lights when hunting for furbearers at night?
Yes, individuals in compliance with the above regulations may use artificial lights of the type ordinarily held in the hand or on the person.

Can I use optics such as scopes or laser sights when hunting furbearers at night?
Yes. Scopes, open sights, thermal, infrared and laser sights may all be used by individuals complying with nighttime regulations above.

What are the restrictions on using artificial lights when I am not hunting furbearers at night?

- It is unlawful to use an artificial light (including vehicle headlights) to locate wild animals at any time during November and all other days of the year between 11 p.m. and 6 a.m.
- Unless hunting furbearers at night and in compliance with nighttime hunting regulations, it is unlawful to use an artificial light on a highway or in a field, wetland, woodland or forest while having in your possession or control a bow and arrow, firearm or other device capable of shooting a projectile.
- An artificial light may be used from Nov. 1-30 on property you own or property owned by a member of your immediate family if you do not have in your possession or control a bow and arrow, firearm or other device capable of shooting a projectile.
- It is a violation of federal law to shine at any time on any national wildlife refuge.
- Those not possessing a firearm or bow and arrow while traveling on foot may use lights during dog training or field trials to follow dogs chasing raccoon, opossum or fox.
- A lighted pin sight on a bow or a scope with illuminated crosshairs may be used to hunt game during legal hunting hours.

Exception: This prohibition does not apply to pistols carried under the authority of a concealed pistol license or properly carried under authority of a specific exemption from the requirement of a concealed pistol license. This does not authorize the individual to use the pistol to take game except as provided by law.

Trapping Equipment Regulations

How often must I check my traps?
You are legally required to check traps set in a manner to hold animals alive at least once each day in Zones 2 and 3 and at least once within each 48-hour period in Zone 1. It is highly recommended that trappers in Zone 1 check traps daily.

What types of traps may I use?
Foothold, body-gripping, conibear, live restraining cage traps and snares/cable restraints may be used as outlined in this digest for the species specified. Snares/cable restraints are illegal unless used for beaver trapping (see page 37) and winter fox and coyote trapping (see page 32).

Traps with teeth or serrations are illegal.

Foothold traps used when taking mink or muskrat may not exceed a jaw spread of a number 2 foothold trap.

Do I need to have my name on my traps?
Yes, all catching devices must have the user's name and address or Michigan driver's license number or DNR sportcard number permanently etched or attached with a metal tag while in use, possession or transporting the catching device in an area frequented by wild animals. Additional tagging requirements may apply for beaver trapping; see Beaver Trapping on page 37.

Are there any restrictions on setting traps near the water?
Yes, there are restrictions in place prior to Oct. 25 in Zone 1, Nov. 1 in Zone 2 and Nov. 10 in Zone 3. Prior to those dates, traps may only be set within 50 feet of water IF the trap meets one of the following requirements:

- The trap is a duffer-type, egg-type, or similarly designed foothold trapset for raccoons.
- A body-gripping or conibear trap must be 4 feet or more above the ground.

Can I set a trap inside an animal burrow or structure or on a beaver dam?
No, fur harvesters may NOT molest or set a trap in the internal compartment of any structure such as a lodge, hut, push-up, house, hole, nest, burrow or den of a badger, beaver, mink, muskrat or raccoon, whether occupied or not, or molest or destroy a beaver dam.

Traps may only be set on a beaver dam or lodge if the trap is:

- Completely submerged below the water.
- A duffer-type, egg-type, or similarly designed foothold trap which by construction will selectively capture raccoon.
- A body-gripping trap 5 inches or less in width as measured inside the jaw hinges.

Continued ▶

- A body-gripping trap less than 8 inches above the ground at the highest point, and set in a way that does not use bait, lure or attractant to entice an animal, and the trap is between 5 and 6.5 inches as measured inside the jaw hinges.

Can I set my traps out before the season opens?
No, trappers may only stake, put out, or set a catching device when the open season for the targeted species begins.

Can I use a colony trap?
Multiple catch or colony traps may only be used for taking muskrats, provided that the trap is completely submerged. Colony traps must be constructed of steel and be no larger than 8 inches high, 8 inches wide and 36 inches deep. Mink caught incidentally in colony traps set for muskrat may be kept.

Can I use a firearm to dispatch an animal in a trap?
Only coyote, fox, raccoon, bobcat and badger may be killed in traps by fur harvesters using only .22-caliber or smaller rimfire firearms. From Nov. 15-30, .22-caliber or smaller rimfire firearms must be loaded at the point of kill only.

Can I use a live trap?
Yes, as a substitute for foothold traps, trappers may use live restraining cage traps capable of taking only one animal at a time. Live restraining cage traps must be checked daily statewide. Any animal captured in a trap must be immediately killed or released; it is unlawful to take, or hold in captivity, live game or protected animals from the wild. Traps must have a permanent etching or a metal tag bearing the user's name and address and Michigan driver's license, or DNR sportcard number.

Can I use a body-gripping trap on land and water?
Yes, body-gripping traps may be used on dry land or in water. For a trap greater than 5.5 inches between the jaw hinges, the trap must be at least half submerged to qualify as being in the water. **Body-gripping traps on dry land must meet the requirements outlined below.**

Are there size or set restrictions for body-gripping traps used on land or on ice?
Yes, the following regulations were developed to help improve the selectivity of dry-land body-gripping traps in an effort to reduce the take of nontarget animals. Find information on safely removing animals from traps at Michigan.gov/Trapping under Additional Resources.

- Dry-land and surface-ice body-gripping traps on private land:
    - ◊ It is unlawful to set a body-gripping or conibear-type trap larger than 7.5 inches in width (as measured inside the jaw hinges) on dry lands that are privately owned, or over frozen submerged privately owned bottomlands unless the trap is 4 or more feet above dry ground or the frozen surface of ice.

- Dry-land and surface-ice body-gripping traps on public land:
  - ◊ Body-gripping traps less than 5.5 inches inside the jaw hinges may be set without restrictions if used according to other regulations. All legal body-gripping traps of any size may be used if they are 4 or more feet off the ground without set restriction. Body-gripping traps set on dry land or on ice on public lands without the use of bait, lure, or attractant must be no greater than 6.5 inches inside the jaw hinges (160s) and only may be set such that no part of the body-gripping surface is more than 8 inches above the ground (see figure).

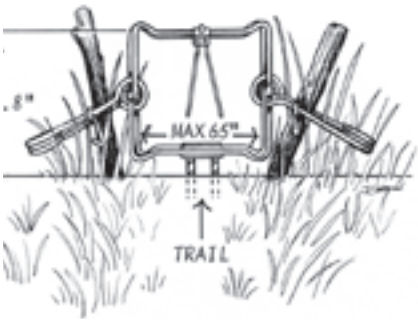

  - ◊ Body-gripping traps 5.5 inches to 7.5 inches inside the jaw hinges (160s and 220s) set on dry land or on ice with the use of bait, lure or other attractants may be used only in the following manner:
    - ■ In a container of the following design:
      - ○ Opening height 6 inches or less.
      - ○ 8-inch minimum spring trap placement slots.
      - ○ Trap trigger recessed minimum of 6 inches.

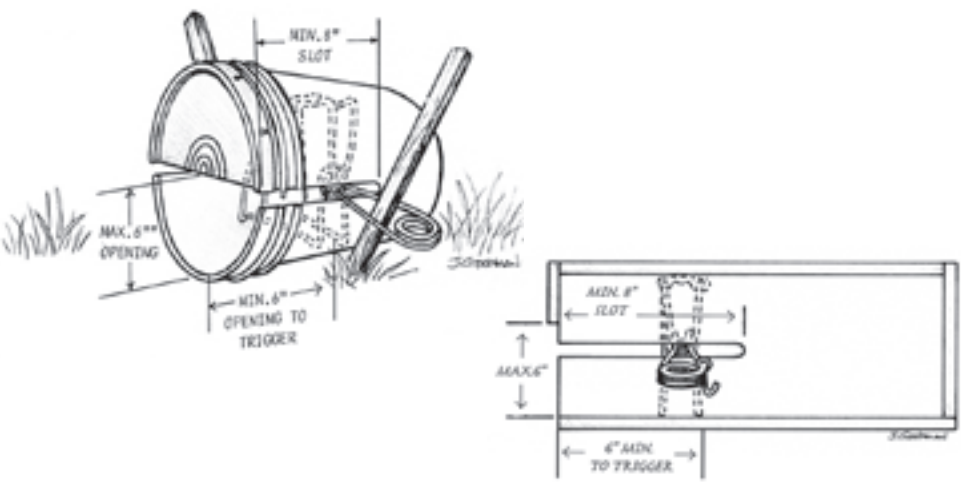

Continued ▶

- In a container of the following design:
  - Only one entrance facing the ground.
  - Container set so entrance is no more than 6 inches from the ground.
  - Trap trigger recessed a minimum of 4 inches.

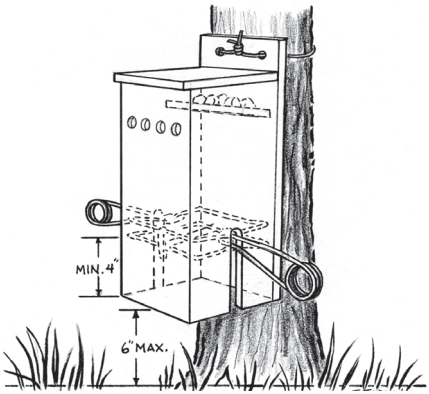

Winter Fox and Coyote Nonlethal

Can I use cable restraints for coyote and fox?
Yes, nonlethal cable restraints may be used from Jan. 1 - March 1 to take fox and coyotes, provided:

- Cable restraints are not placed on publicly owned land or Commercial Forest lands.
- All cable restraints in possession or carried afield have a metallic identification tag affixed with the owner or user's name and address or Michigan driver's license number or DNR sportcard number.
- As steel cable 1/16 inch or larger is used.
- The cable restraint loop does not exceed 15 inches in diameter.
- The top of the loop is not placed more than 24 inches above the ground. In snow, 24 inches is measured from the compacted snow in a trapper's footprint established by the full body weight of the trapper.
- Cable restraints are equipped with a relaxing lock. A relaxing lock is defined as a lock that allows the loop to loosen slightly to reduce the possibility of strangulation. Cable restraints also must be equipped with a stop to prevent the loop from closing to a diameter less than 4.25 inches.
- Cable restraints are equipped with a breakaway locking system with a breaking point not greater than 285 pounds. The breakaway device must be attached to the relaxing lock.
- Cable restraints are affixed to a stake or object sufficient to hold a fox or coyote. It is unlawful to use any type of drag.

- Cable restraints are equipped with two swivels, including one swivel at the anchor point.
- Spring poles, counterbalanced weights, springs, or other similar devices are not used to close the cable restraint.
- Cable restraints may be up to 60 inches in length, not including a cable anchor extension. A cable anchor extension may be up to 36 inches in length.
- Cable restraints are not attached to a fence or set in a manner that would allow an animal to become entangled in a fence.
- Cable restraints may be anchored to woody vegetation provided that the stem is free of branches and stubs to a height of 5 feet above the ground or compacted snow. Branches and stubs must be cut flush with the outer bark of the stem.
- Cable restraints may not be set so that a restrained animal is suspended with two or more feet off the ground.

What should I do if a dog is caught in a trap?
Dogs and other domestic animals caught in cable restraints, body-gripping or conibear-type traps should be reported to the DNR Report All Poaching hotline at 800-292-7800. Find information on safely removing dogs from traps at Michigan.gov/Trapping under Additional Resources.

Bobcat* Hunting and Trapping

***Mandatory registration and free kill tag(s) required. Kill tags for bobcat are only available until Nov. 30, 2021.**

How many bobcats can I harvest?
The bobcat bag limit is two per resident. One kill tag is valid for all lands and for all units combined. A second kill tag is valid for Unit A ONLY, on private lands (excluding Commercial Forest lands).

What are the bobcat hunting and trapping season dates for each unit?

Bobcat Management Unit	Hunting Season	Trapping Season
A and B	Jan. 1 - March 1	Dec. 1 – Feb. 1
C	Jan. 1 – March 1	Dec. 10-20
D	Jan. 1 – Feb. 1	Dec. 10-20
E and F	Jan. 1 – Jan. 11	Dec. 10-20

Are there limits to the types of traps I can use for bobcat?
In addition to the trapping restrictions outlined above, units C, D, E and F are limited to foothold traps only.

If I am going with a bobcat hunter during a hunt, do I need a license?
A fur harvester license is required by any individual in possession of a firearm, crossbow, or bow and arrow who accompanies a licensed bobcat hunter during the hunt. This license is also required by the owner of any dog chasing or locating bobcat on a hunt.

Where are the bobcat hunting and trapping units?
Unit A includes all of the Upper Peninsula, except Drummond Island. Unit B is Drummond Island. Unit C includes Alcona, Alpena, Antrim, Charlevoix, Cheboygan, Emmet, Montmorency, Oscoda, Otsego and Presque Isle counties. Unit D includes Clare, Crawford, Gladwin, Iosco, Kalkaska, Missaukee, Ogemaw, Osceola, Roscommon and Wexford counties, and Arenac County north of M-61 and west of I-75. Unit E includes Benzie, Grand Traverse, Lake, Leelanau, Manistee, and Mason counties. Unit F all of Isabella, Mecosta, Midland, Newaygo, and Oceana counties, and those portions of Arenac and Bay counties that are in Zone 2 except that portion of Arenac County west of highway I-75 and north of highway M-61.

Beaver and Otter* Trapping

***Free kill tags and mandatory registration for otter are required.**

What are the bag limits for beaver trapping?
There are no bag limits for beaver.

Are the beaver trapping season dates different for residents and nonresidents?
Yes, see chart below.

Unit	Resident Trapping	Nonresident Trapping
A	Oct. 25 – April 30	Nov. 15 – April 30
B	Nov. 1 – April 23	Nov. 24 – April 29
C	Nov. 10 – April 23	Dec. 15 – April 29

What are the dates for otter trapping?
Otter trapping is open to **residents only** during the following dates:

- Unit A is Oct. 25 – March 31
- Unit B is Nov. 1 – March 31
- Unit C is Nov. 10 – March 31

What is the otter bag limit?
Four otters per RESIDENT fur harvester; only three may be taken from Unit B, and only two from Unit C.

What are the beaver and otter trapping units and boundaries?
The units for beaver and otter trapping correspond with the three Michigan hunting zones. Unit A is Zone 1, Unit B is Zone 2, and Unit C is Zone 3.

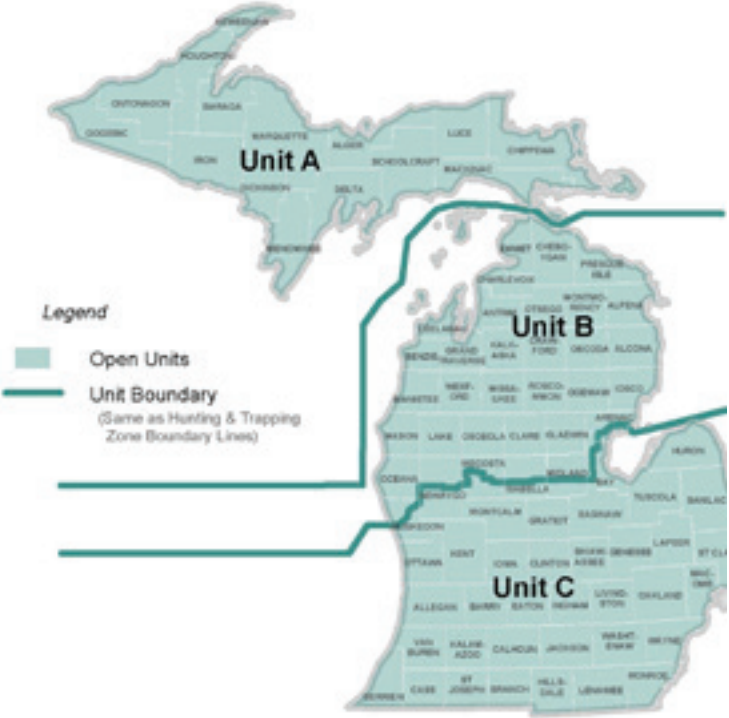

Are there locations closed to beaver and otter trapping?
Yes, beaver and otter trapping are closed in the following areas.
Alger County: Pictured Rocks National Lakeshore, Benzie County: Sleeping Bear Dunes National Lakeshore, Leelanau County: Sleeping Bear Dunes National Lakeshore, Schoolcraft County: Seney National Wildlife Refuge closed to otter trapping contact the refuge on possible beaver trapping. Also see listing of public land trapping areas where a permit is required on page 18.

If I catch otters while trapping beaver after otter season has closed, can I keep those otters?
Otters incidentally taken while trapping for beaver in April may be lawfully possessed if included within your otter bag limit and a valid otter kill tag is used. All rules and regulations for taking otter apply.

Why are beaver and otter season dates different?
Beginning in 2020, Michigan beaver season and otter season end at different times. This change was made to allow for more beaver harvest opportunities without increasing the spring harvest of otters. We are asking beaver trappers

in April to make every effort to target only beaver and to make sets that are most likely to avoid otters. Reducing the April take of otters will help ensure the extended beaver season can remain in place and that we can offer expanded otter bag limits for the open season. However, if a trapper has otter kill tags, they may be used to tag otter taken in April if caught incidentally in beaver sets.

What equipment can I use for trapping beaver and otter?
Foothold, body-gripping or conibear-type traps may be used for taking beaver and otter. Traps with teeth are unlawful. Snares may be used for taking beaver in water or under ice, statewide. Snares must be made of 1/16-inch or larger cable. Snares not under ice must have a loop that is at least half submerged and must be set in a fashion to hold the beaver completely submerged. Snares should be removed and made inoperative within 24 hours after the close of the beaver season. A catching device of any type must have a permanent etching or metal tag bearing the user's name and address and or Michigan driver's license number or DNR sportcard number. If one or more snares are attached to a pole, both the snare(s) and the uppermost end of the pole need a metal tag with the user's information.

How many muskrats caught in a beaver or otter set may I keep?
You may keep up to 10 muskrats taken in beaver or otter sets.

Can I destroy a beaver dam?
No, you may not molest or destroy a beaver dam, except under a DNR wildlife damage and nuisance animal control permit.

How can I avoid otters while trapping for beavers?

- Avoid trapping areas with a lot of signs of otters.
- Avoid trapping streams, ditches or narrow connecting bodies of water between ponds, wetlands, lakes, etc. These are frequently used by otters for travel.
- Avoid sets near abandoned beaver lodges and bank dens.
- Avoid setting traps on crossovers, especially those near culverts, berms, dikes and narrow portions of streams. Crossovers near the inflow or dam of beaver ponds also should be avoided.
- When using body-gripping traps, moving triggers to the side of the trap may reduce the chance an otter will trigger the trap while beavers will trigger the trap (see sketch).

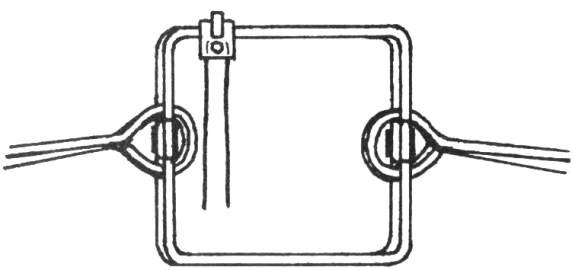

Illustrated by Bob Noonan

Continued ▶

- Use a dive stick above the body-gripping trap. Place the body-gripping trap on the bottom, below the dive stick. Beavers tend to dive to the bottom when going under dive sticks, while otters remain close to the surface (see sketch).

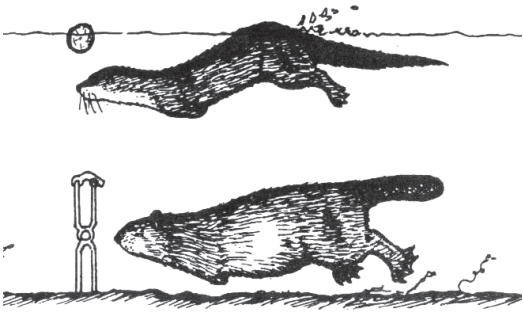

Illustrated by Bob Noonan

- Make trap sets outside of high animal movement areas in combination with castor sets or baited sets (such as aspen branches) to allow for good opportunities to catch beaver but reducing the chances of otter catch.
- Gang-set active areas to catch the beaver as fast as possible and leave. Setting fewer traps and scattering large numbers of traps at every possible beaver travel-way or trying to catch that “last beaver” will substantially increase the likelihood of catching an unwanted otter.

WILDLIFE DISEASES AND INVASIVE SPECIES

Wildlife Diseases

What if I see sick animal while out hunting or trapping?
You can report any sightings of sick or dead wildlife at Michigan.gov/WildlifeDisease.

Should I be concerned about rabies?
Rabies is a disease of the central nervous system caused by a virus. The virus is usually transmitted in the saliva from animal to animal and from animal to human by a bite. All mammals are susceptible. It is important to understand that there are no typical or characteristic signs for this disease, and many signs associated with rabies overlap with symptoms of other wildlife diseases. However, some behaviors to watch for include aggressive biting, paralysis, restlessness, tremors, and convulsions. Once signs of illness appear, rabies is 100% fatal; however, proper postexposure treatment is nearly 100% effective. Contact your local state health department regarding any sample submissions.

Does canine distemper impact wildlife?
Canine distemper is a highly contagious disease of carnivores. The virus is widespread, and impacted species include wolf, coyote, fox, domestic dog, raccoon, mink, marten, fisher, otter, badger, and skunk. The canine distemper virus is very resistant to cold. In wild animals, the majority of cases are seen in the spring and summer, but cases are observed year-round. Die-offs of raccoons due to canine distemper occur yearly. The impact of this disease on other wildlife populations is not known at this time. Typical signs of canine distemper in wild carnivores may include lack of fear, nasal and eye discharge, disorientation, convulsive movements of the head and paws, and aimless wandering. Affected animals should be handled with caution until a diagnosis is confirmed.

Is mange common to see in foxes or coyotes?
Sarcoptic mange is commonly seen in wolves, coyotes, red foxes and occasionally raccoons. It is caused by a mite, which lives and burrows into the layers of the skin. The mites cause an irritation, resulting in the animal scratching and biting the affected area and spreading the mite on its body. Hair loss, thickening and wrinkling of the skin, and scab and crust formation on the skin are the result of the infestation. Feeding behavior may be altered due to the intense irritation, resulting in malnutrition. In severe cases, the animals can die due to exposure from losing the insulating layer that the hair provides. In most cases, mange will resolve itself. Mange-infested animals should only be handled while wearing gloves. Freezing the carcass will kill the mites for safer handling. The mite can live on humans for a period of time, causing severe irritation at the exposure site. Consult your physician or veterinarian, respectively, if you or your pet may have been in contact with an infected animal.

Invasive Species

What should I do If I see a nutria?
Trappers are encouraged to report nutria that they have seen or trapped to the Midwest Invasive Species Information Network at MISIN.MSU.edu/Report. Nutria are approximately twice the size of a muskrat. Although nutria have not yet been discovered in Michigan, they could cause damage to wetlands if they become established. Things to look for: heavy, scaly, round rat-like tail; long, white whiskers; and large, orange teeth.

Can I hunt Russian boar?
Hunters are encouraged to report all Russian boar seen or taken, online at Michigan.gov/FeralSwine or by calling 517-284-9453. Russian boar can be taken on public land by anyone possessing a valid hunting license or a concealed pistol license, or on private land with the landowner's permission. Hunters who shoot a Russian boar are asked to submit parts of the animal to the DNR for disease testing.

Need information?

Contact a DNR office listed below or visit us online.
Customer Service Centers (CSC) are open Monday through Friday, 8 a.m. to 5 p.m.

Baraga CSC
427 U.S. 41 N.
Baraga, MI 49908
906-353-6651

Bay City CSC
3580 State Park Drive
Bay City, MI 48706
989-684-9141

Cadillac CSC
8015 Mackinaw Trail
Cadillac, MI 49601
231-775-9727

Crystal Falls Field Office
1420 W. U.S. 2
Crystal Falls, MI 49920
906-875-6622

Detroit Metro CSC
1801 Atwater St.
Detroit, MI 48207
313-396-6890

Escanaba CSC
6833 U.S. 2, U.S. 41 and M-35
Gladstone, MI 49837
906-786-2351

Gaylord CSC
1732 W. M-32
Gaylord, MI 49735
989-732-3541

Lansing CSC
4166 Legacy Parkway
Lansing, MI 48911
517-284-4720

Marquette CSC
1990 U.S. 41 S.
Marquette, MI 49855
906-228-6561

Naubinway Field Office
P.O. Box 287
W11569 U.S. 2 E.
Naubinway, MI 49762
906-477-6048

Newberry CSC
5100 M-123
Newberry, MI 49868
906-293-5131

Norway Field Office
520 W. U.S. 2
Norway, MI 49870
906-563-9247

Plainwell CSC
621 N. 10th St.
Plainwell, MI 49080
269-685-6851

Roscommon CSC
I-75 and M-18 South,
8717 N. Roscommon Road
Roscommon, MI 48653
989-275-5151

Sault Ste. Marie CSC
P.O. Box 798
4131 S. M-129 .
Sault Ste. Marie, MI 49783
906-635-5281

Traverse City CSC
2122 S. M-37
Traverse City, MI 49685
231-922-5280

Helpful URLs:

Find us on Facebook at Facebook.com/MichiganDNR
Follow us on Twitter at Twitter.com/MDNR_Wildlife
Hunter education: Michigan.gov/HunterEducation

Direct DNR website URLs:
DNR digests and guides: Michigan.gov/DNRDigests
Emerging diseases: Michigan.gov/EmergingDiseases
Explore Michigan's Wetland Wonders: Michigan.gov/WetlandWonders
Hunting: Michigan.gov/Hunting
Trapping/fur harvesting: Michigan.gov/Trapping
Invasive species: Michigan.gov/InvasiveSpecies
Mi-HUNT: Michigan.gov/MiHunt
Pure Michigan Hunt: Michigan.gov/PureMichiganHunt
Shooting ranges: Michigan.gov/ShootingRanges

Michigan Department of Natural Resources
Wildlife Division
525 W. Allegan St.
P.O. Box 30444
Lansing, MI 48933
(517) 284-WILD (9453)
Contact hours: 8 a.m. to 5 p.m.