Attachment 9

Engineering Drawings

THE
ENVIRONMENTAL QUALITY
COMPANY

36255 MICHIGAN AVENUE, WAYNE, MI. 48184
TEL. (734) 329-8000

RE-ENGINEERING AND DESIGN OF EQ RESOURCE RECOVERY, INC.

VAN BORN ROAD PLANT

HRC JOB 20050683

ISSUED FOR MDEQ SUBMITTAL 07-17-06

SHEET NO.	DRAWING TITLE
COVER SHEET	DRAWING INDEX – MDEQ SUBMITTAL JULY 17, 2006
GFL-1	GENERAL FACILITY LAYOUT
TM-1	TOPOGRAPHIC MAP – 1 MILE RADIUS OF SITE
EEER-1	EMERGENCY EQUIPMENT & EVACUATION ROUTES
TD-01	TANK FARM TANK DETAILS
TD-02	TANK FARM TANK DETAILS
TD-03	TANK FARM TANK DETAILS
TD-04	TANK FARM TANK DETAILS
TF-1	TANK FARM PLANS, SCHEDULES, & SECTIONS
TP-1	TANK FARM WASTE TANK & EQUIPMENT PLAN
TP-2	TANK FARM WASTE TANK PIPING PLAN – AREA "C"
TP-3	TANK FARM WASTE TANK PIPING PLAN – AREA "D"
TP-4	TANK FARM GALLERY ISOMETRIC FACING NORTHWEST
TP-5	CONTAINER MANAGEMENT BUILDING & MIN: TANK FARM ISOMETRIC
DS-1	CONTAINER MANAGEMENT BUILDING FLOOR PLAN
DS-2	DRUM STORAGE AREA DETAILS
CCD-1	CONTAINMENT VOLUME SITE PLAN
P&ID-00	PROCESS FLOW DIAGRAM
P&ID-01	DEDICATED PROCESS
P&ID-02	DEDICATED PROCESS
P&ID-04	WASTE SOLVENT TANKS
P&ID-05	WASTE SOLVENT TANKS
P&ID-06	WASTE SOLVENT TANKS
P&ID-07	LUWA PROCESS
P&ID-08	LUWA PROCESS
P&ID-09	LUWA PROCESS
P&ID-18	FUEL BLEND TANKS
P&ID-22	DRUM/TOTE UNLOAD & WASTE SOLVENT TANK
P&ID-38	PUMPS, MIXERS, STRAINER AND FILTER SCHEDULES
P&ID-38	CONSERVATION VENT, FLAME ARRESTOR AND EMERGENCY RELIEF VENT SCHEDULES
P&ID-39	INSTRUMENT SCHEDULES
P&ID-40	INSTRUMENT SCHEDULES
P&ID-41	VALVE SCHEDULES

HRC

Hubbell, Roth & Clark, Inc.
CONSULTING ENGINEERS

555 HULET DRIVE
BLOOMFIELD HILLS, MICH.

P.O. BOX 824
48303 - 0824

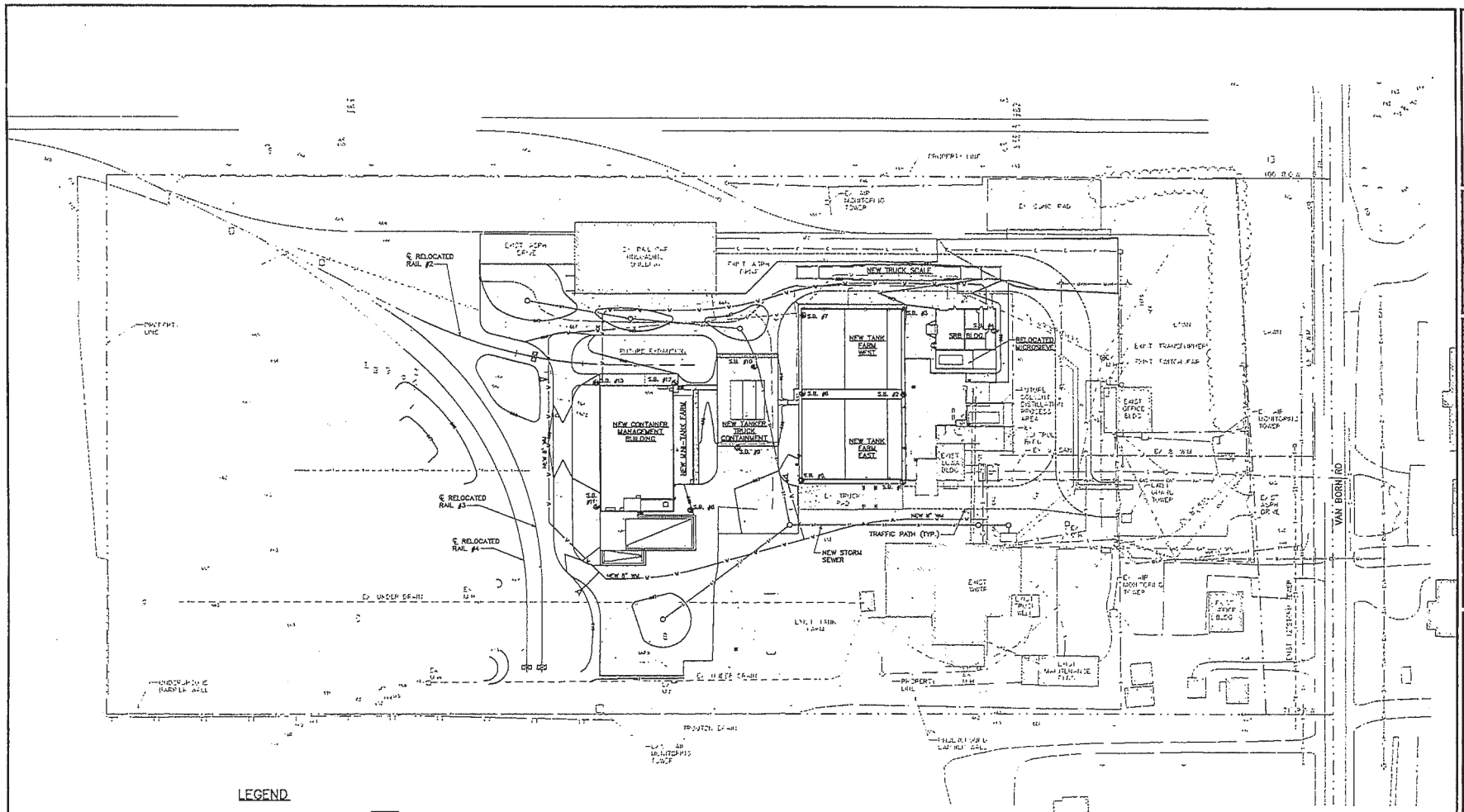

LEGEND

- EXISTING BITUMINOUS PAVEMENT
- EXISTING CONCRETE PAVEMENT
- EXISTING 1' CONTOUR
- EXISTING SPOT ELEVATION
- EXISTING FIRE HYDRANT
- EXISTING WATER MAIN
- EXISTING SANITARY SEWER
- EXISTING GAS LINE
- EXISTING RAIL TRACK
- EXISTING UTILITY POLE
- EXISTING STORM SEWER
- EXISTING UNDER DRAIN
- EXISTING MANHOLE
- EXISTING CATCH BASIN/SUMP
- EXISTING OVERHEAD ELECTRICAL
- EXISTING FENCE
- PROPERTY LINE
- NEW CONCRETE PAVEMENT
- NEW BITUMINOUS PAVEMENT
- NEW AGGREGATE SURFACE
- NEW LATEX PAVEMENT RESTORATION
- NEW 1' CONTOUR
- NEW SPOT ELEVATION
- NEW FIRE HYDRANT
- NEW WATER MAIN
- NEW STORM SEWER
- NEW MANHOLE/CATCH BASIN
- SOIL BORING LOCATION
- EXISTING UNDERGROUND ELECTRICAL

PROPOSED SITE PLAN

SCALE: 1" = 50'

N

EXISTING BACKGROUND IS BASED ON A BLEND OF THREE DATA SOURCES:

1. AERIAL TOPOGRAPHY PROVIDED BY EQ.
2. HRC FIELD TOPO.
3. HRC LASER SCAN AT EXISTING TANK FARM.

NOTES

3 FULL WORKING DAYS
BEFORE YOU DIG
CALL MISS DIG
1-800-482-7171

THE ENVIRONMENTAL QUALITY COMPANY

EQ RESOURCE RECOVERY, INC
36345 VAN BORN
ROMULUS, MI. 48174

HRC

Hubbell, Roth & Clark, Inc.
CONSULTING ENGINEERS
555 HULET DRIVE P.O. BOX 824
BLOOMFIELD HILLS, MICH. 48303-0824
PHONE: (248) 454-6300
FAX (Tel. Fleet): (248) 454-6312
FAX (Gral. Fleet): (248) 258-2822
WEB SITE: http://www.hrc-eng.com

07-17-06	MDEQ SUBMITTAL
DATE	ADDITIONS AND/OR REVISIONS
DESIGNED	W.R.D.
DRAWN	E.J.P.
CHECKED	W.R.D.
APPROVED	P.T.R.

RE-ENGINEERING AND DESIGN OF EQ RESOURCE RECOVERY, INC. VAN BORN ROAD PLANT

GENERAL FACILITY LAYOUT

HRC JOB NO. 20050683	SCALE AS NOTED
DATE JULY 2006	SHEET NO. GFL-1

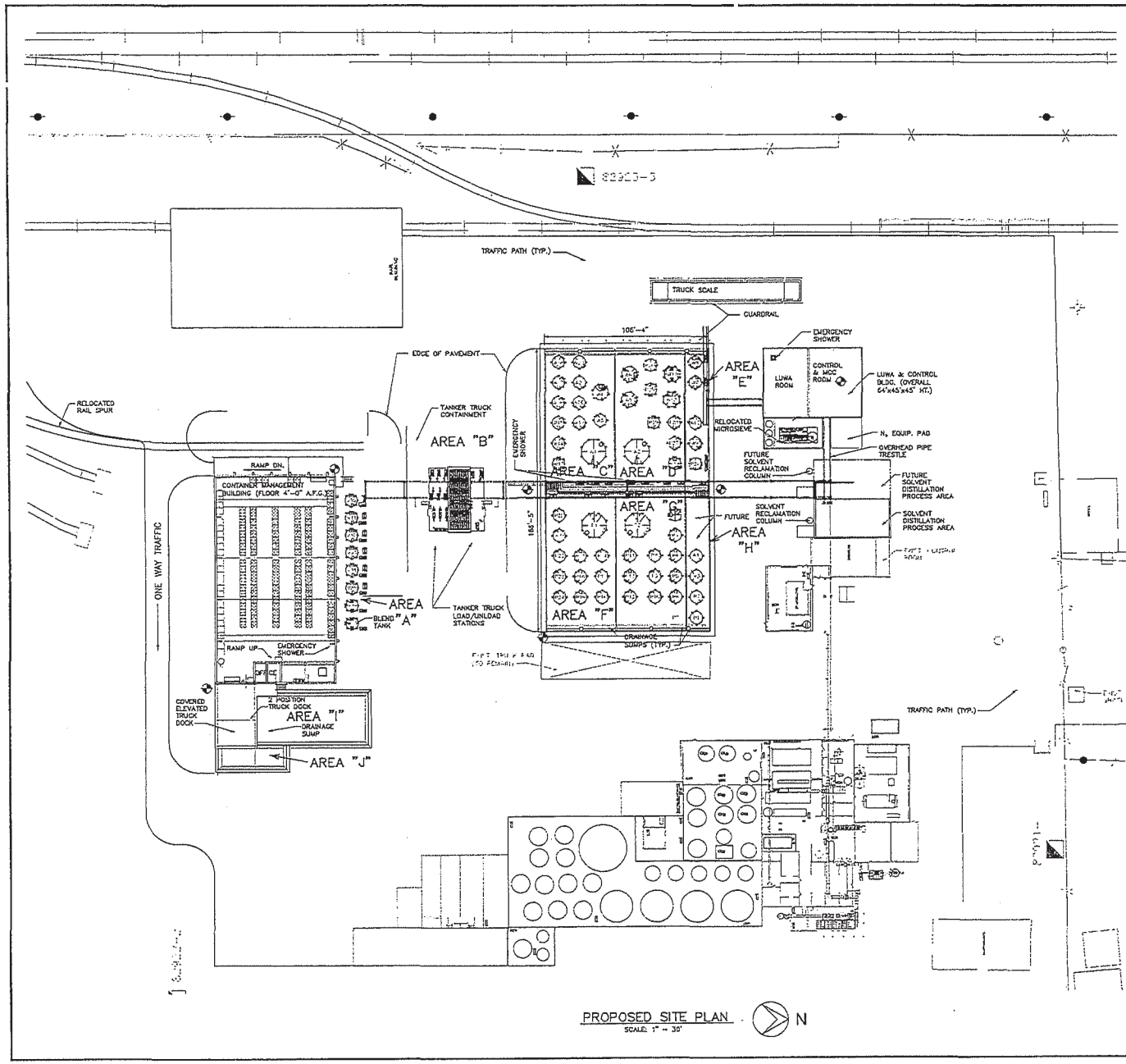

PROPOSED SITE PLAN

SCALE: 1" = 30'

CONTAINMENT AREA VOLUMES

SECONDARY CONTAINMENT VOLUME CALCULATIONS

DESIGNATION	DIMENSIONS	AVERAGE DEPTH, FEET	CONTAINMENT VOLUME, GALLONS	LARGEST VESSEL, GALLONS	25 YEAR, RAINFALL VOLUME, GALLONS	LARGEST VESSEL PLUS RAINFALL, GALLONS
A	18' by 52'-0"	1'-0"	12,791	7,500	4,137	11,637
B	92' by 84' area, see Note 2		22,514	4,000	14,314	20,314
C	84'-10" by 44'-4"	2'-3"	63,048	50,000	9,443	59,443
D	84'-10" by 44'-4"	2'-3"	63,373	50,000	9,443	59,443
E	84'-10" by 14'-4"	2'-3"	21,182	7,500	3,060	10,560
F	84'-10" by 44'-4"	2'-3"	63,373	50,000	9,443	59,443
G	84'-10" by 44'-4"	2'-3"	63,373	50,000	9,443	59,443
H	84'-10" by 14'-4"	2'-3"	21,182	7,500	8,757	16,257
I	30'-0" by 70'-0"	3"	6,958	500	5,105	5,605
J	12'-0" by 40'-0"	4.5"	1,346	0	1,167	1,167

NOTES

1. 25 YEAR RAINFALL IS THE 25 YEAR, 24 HOUR DURATION DEPTH OF 3.60 INCHES
2. CONTAINMENT VOLUME CONSISTS OF 4.5 INCH HIGH CURBING TO CONTAIN 25 YEAR STORM PLUS 1 CONCRETE SUMP WITH A TOTAL VOLUME OF 6000 GALLONS

THE ENVIRONMENTAL QUALITY COMPANY

EQ RESOURCE RECOVERY, INC
35345 VAN BORN
ROMULUS, MI 48174

HRC
Hubbell, Roth & Clark, Inc.
CONSULTING ENGINEERS
555 HULET DRIVE
BLOOMFIELD HILLS, MICH.
P.O. BOX 824
48303 - 0824
PHONE: (248) 454-6189
FAX (1st. Floor): (248) 454-6312
FAX (2nd. Floor): (248) 334-2552
WEB SITE: http://www.hrc-eng.com

DATE	ADDITIONS AND/OR REVISIONS
07-17-06	MDEQ SUBMITTAL
02-07-06	MDEQ MEETING
02-07-06	MDEQ MEETING
02-01-06	OWNER'S REVIEW
01-25-06	OWNER'S REVIEW
01-10-06	OWNER'S REVIEW

DESIGNED E.C.
DRAWN T.W.R.
CHECKED
APPROVED

RE-ENGINEERING AND DESIGN OF EQ RESOURCE RECOVERY, INC. VAN BORN ROAD PLANT

CONTAINMENT VOLUME SITE PLAN

HRC JOB NO 20050683
SCALE 1" = 30'
DATE JULY 2006
SHEET NO CCD-1

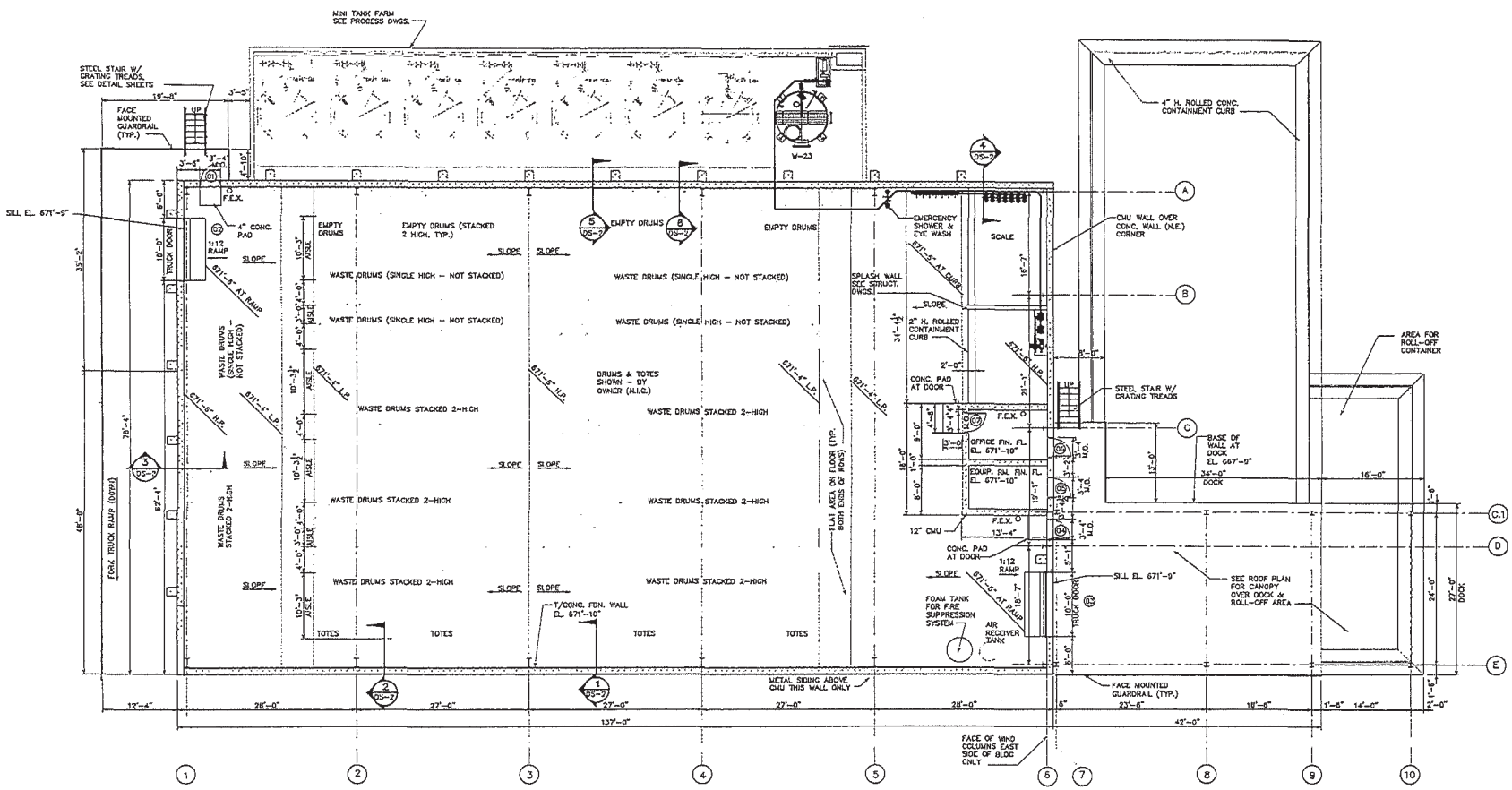

FLOOR PLAN
SCALE: 1/8" = 1'-0"

N

NOTES:

1. DOOR GS IS TO BE CENTERED IN EQUIPMENT ROOM WALL.
2. F.E.X. = FIRE EXTINGUISHER (SEE SPECS)

THE ENVIRONMENTAL QUALITY COMPANY

EQ RESOURCE RECOVERY, INC
36345 VAN BORN
ROMULUS, MI 48174

HRC
Hubbell, Roth & Clark, Inc.
CONSULTING ENGINEERS
615 HULET DRIVE
BLOOMFIELD HILLS, MICH.
P.O. BOX 824
48303 - 0824
PHONE: (248) 454-6300
FAX (Int. Floor): (248) 454-6312
FAX (Ext. Floor): (248) 338-2682
WEB SITE: http:// www.hrc-eng.com

DATE	ADDITIONS AND/OR REVISIONS
07-17-06	MDEQ SUBMITTAL
07-06-06	OWNER'S REVIEW
05-24-06	OWNER'S REVIEW
02-07-06	MDEQ MEETING
02-01-06	OWNER'S REVIEW

DESIGNED	J.M.G.
DRAWN	J.M.G. / A.H.K.
CHECKED	L.R.A.
APPROVED	P.T.R.

RE-ENGINEERING
AND DESIGN OF
EQ RESOURCE
RECOVERY, INC.
VAN BORN ROAD PLANT

CONTAINER MANAGEMENT
BUILDING
FLOOR PLAN

PROJECT NO. 20050683	SCALE AS NOTED
DATE JULY 2006	SHEET NO. DS-1 OF 2

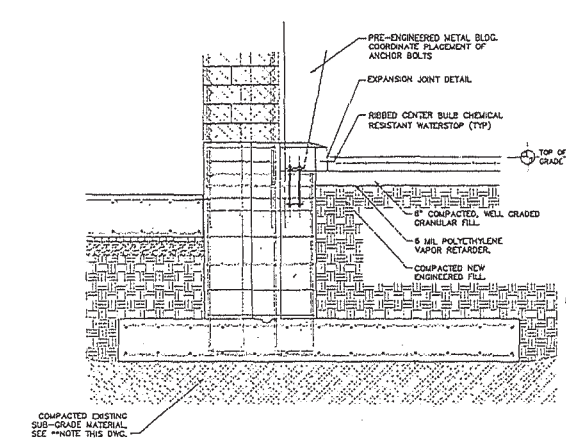

SECTION 6 / DS-1
SCALE: 1/2" = 1'-0"

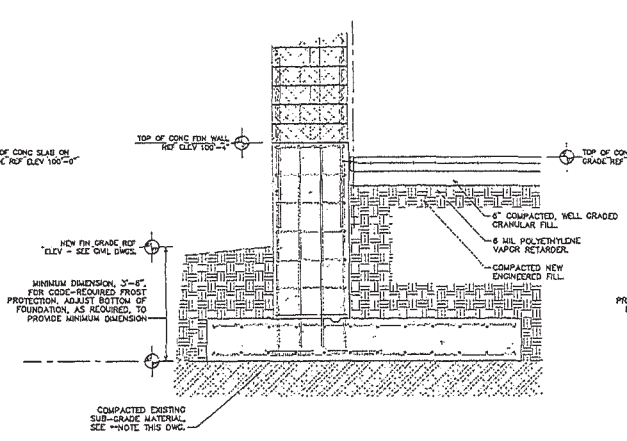

SECTION 5 / DS-1
SCALE: 1/2" = 1'-0"

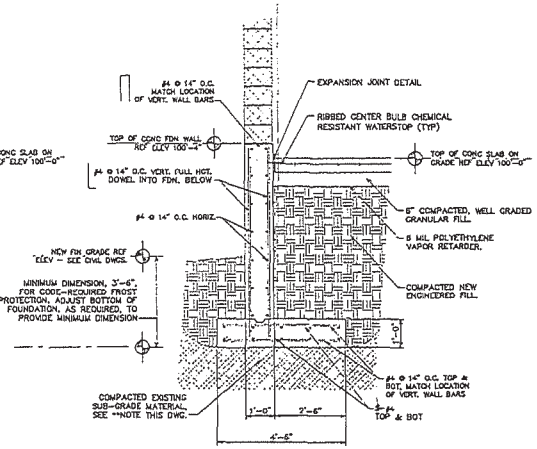

SECTION 4 / DS-1
SCALE: 1/2" = 1'-0"

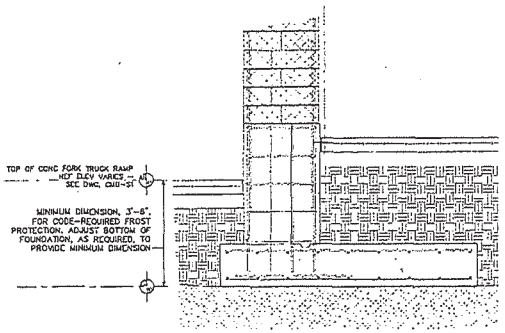

SECTION 3 / DS-1
SCALE: 1/2" = 1'-0"

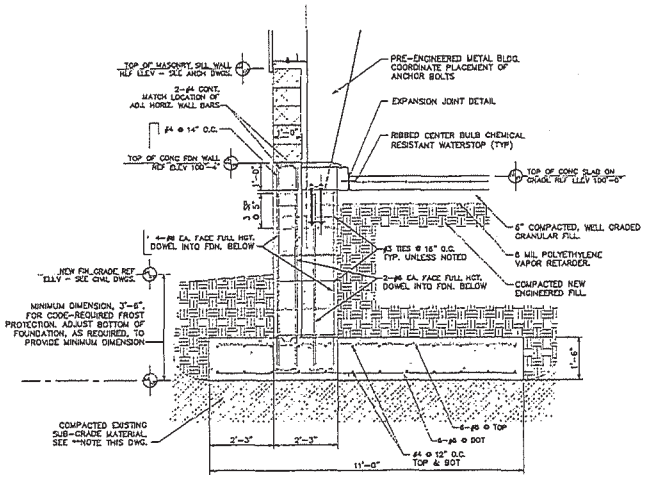

SECTION 2 / DS-1
SCALE: 1/2" = 1'-0"

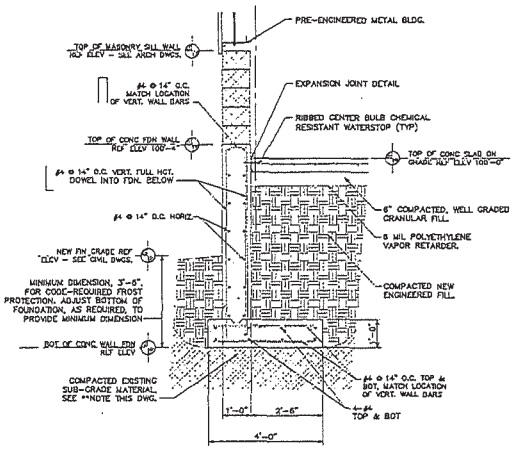

SECTION 1 / DS-1
SCALE: 1/2" = 1'-0"

** NOTE: EXCAVATION AND REMOVAL OF EXISTING SUB-GRADE MATERIAL FOR PLACEMENT OF NEW CONCRETE FOUNDATIONS IS TO BE KEPT TO THE MINIMUM REQUIRED TO SAFELY REACH THE INTENDED BEARING ELEVATION AND PROVIDE ADEQUATE CLEARANCE FOR PLACEMENT OF CONCRETE FORMWORK AND REINFORCEMENT.

THE ENVIRONMENTAL QUALITY COMPANY

EQ RESOURCE RECOVERY, INC
36345 VAN BORN
ROMULUS, MI. 48174

HRC
Hubbell, Roth & Clark, Inc.
CONSULTING ENGINEERS
655 MILLER DRIVE
BLOOMFIELD HILLS, MICH.
P.O. BOX 824
48303-0824
PHONE: (248) 454-6300
FAX (Int. Phone): (248) 454-6312
FAX (Int. Phone): (248) 334-2393
WEB SITE: http:// www.hrc-engr.com

DATE	ADDITIONS AND/OR REVISIONS
07-17-06	IDEQ SUBMITTAL
05-24-08	OWNER REVIEW

DESIGNED W.P.V.
DRAWN W.P.V.
CHECKED F.C.N.
APPROVED P.T.R.

RE-ENGINEERING AND DESIGN OF EQ RESOURCE RECOVERY, INC. VAN BORN ROAD PLANT

DRUM STORAGE AREA DETAILS

HRC JOB NO 20050683
SCALE AS NOTED
DATE JULY 2006
SHEET NO DS-2 OF 2

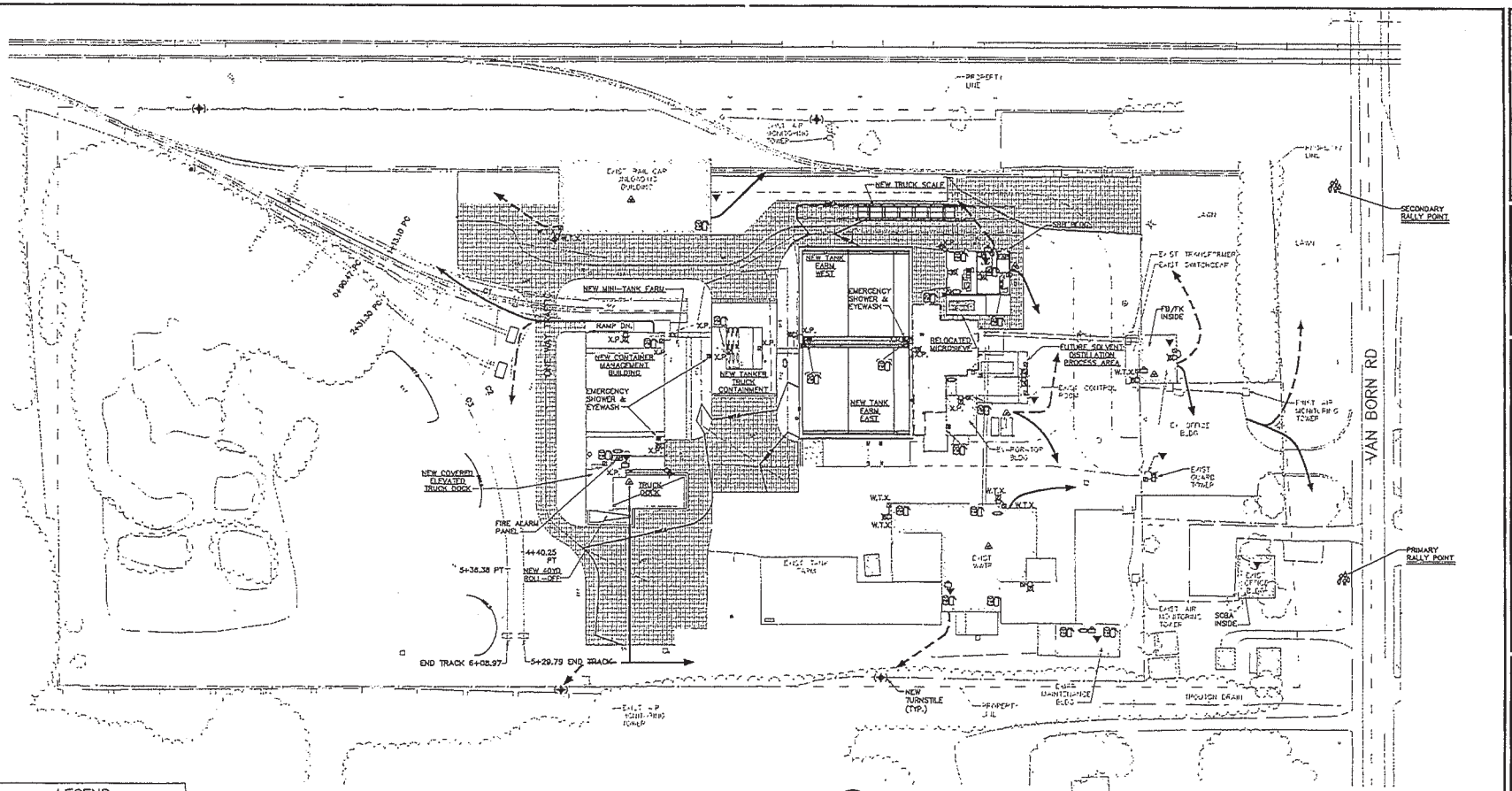

ALARM AND COMMUNICATION SITE PLAN

SCALE: 1" = 50'

N

LEGEND

	ALARM STROBE WITH AUDIBLE ALARM/PAGING
	ALARM PULL STATION
	FIRE ALARM PANEL
	EMERGENCY SHOWER & EYEWASH
	FIRE BLANKET
	EXTINGUISHER
	SPILL CONTROL KIT
	FIRE EXIT
	TELEPHONE
	STAIRWAY
	FIRST AID KIT
	RALLY POINT (ASSEMBLY AREA)
	ALTERNATE EVACUATION ROUTES
	PRIMARY EVACUATION ROUTES
	EXIT TURNSTILE (ONE WAY)
X.P.	EXPLOSION PROOF
W.T.X.	WATERTIGHT AND CORROSION RESISTANCE

EMERGENCY GUIDELINES:

A. FAMILIARIZE YOURSELF WITH ALL EXIT LOCATIONS.

B. KNOW WHERE ALL FIRE EMERGENCY AND SAFETY EQUIPMENT IS LOCATED.

C. EVACUATE WHEN EVACUATION SIGNAL IS SOUNDED AND PROCEED TO DESIGNATED RALLY (ASSEMBLY) AREA.

D. ONCE EVACUATED, REMAIN IN RALLY AREA UNTIL "ALL CLEAR" IS SOUNDED.

E. SUPERVISORS WILL SERVE AS WARDENS IN THE SHELTER OR EVACUATION ASSEMBLY (RALLY) AREAS.

F. PROCEED TO THE NEAREST EVACUATION ROUTE IF PRIMARY ROUTE IS CLOSED.

G. REGARDLESS OF THE EVACUATION EXIT USED, EMPLOYEES SHOULD REPORT TO THEIR ASSIGNED EVACUATION RALLY ASSEMBLY AREA. ALTERNATE RALLY (ASSEMBLY) AREA SHOULD BE USED WHEN PRIMARY AREA IS INACCESSIBLE.

EVACUATION ALERTS:

1. PLANT EVACUATION SIGNAL:
"EVACUATE THE BUILDING IMMEDIATELY"
CONTINUOUS SHORT BLASTS OF THE PLANT ALARM HORNS WILL BE SOUNDED. THIS SIGNAL WILL BE SOUNDED UNTIL THE ENTIRE PLANT HAS BEEN EVACUATED.

2. ALL CLEAR SIGNAL:
"RETURN TO WORKPLACE"
THREE (3) FIVE-SECOND BLASTS OF THE PLANT ALARM HORN. THIS SIGNAL WILL BE REPEATED AS LONG AS NECCESSARY.

THE ENVIRONMENTAL QUALITY COMPANY

EQ RESOURCE RECOVERY, INC
36345 VAN BORN
ROMULUS, MI. 48174

HRC
Hubbell, Roth & Clark, Inc.
CONSULTING ENGINEERS
555 HULET DRIVE
BLOOMFIELD HILLS, MICH.
P.O. BOX 824
48303-0824
PHONE: (248) 454-6300
FAX (1st. Floor): (248) 454-6312
FAX (2nd. Floor): (248) 238-2582
WEB SITE: http:// www.hrc-eng.com

DATE	ADDITIONS AND/OR REVISIONS
07-17-06	MDEQ SUBMITTAL

DESIGNED	K.L.C.
DRAWN	B.T.E.
CHECKED	L.R.A.
APPROVED	P.T.R.

RE-ENGINEERING AND DESIGN OF EQ RESOURCE RECOVERY, INC. VAN BORN ROAD PLANT

EMERGENCY EQUIPMENT & EVACUATION ROUTES

HRC JOB NO. 20050583	SCALE 1" = 50'-0"
DATE JULY 2006	SHEET NO. EEER-1 OF 1

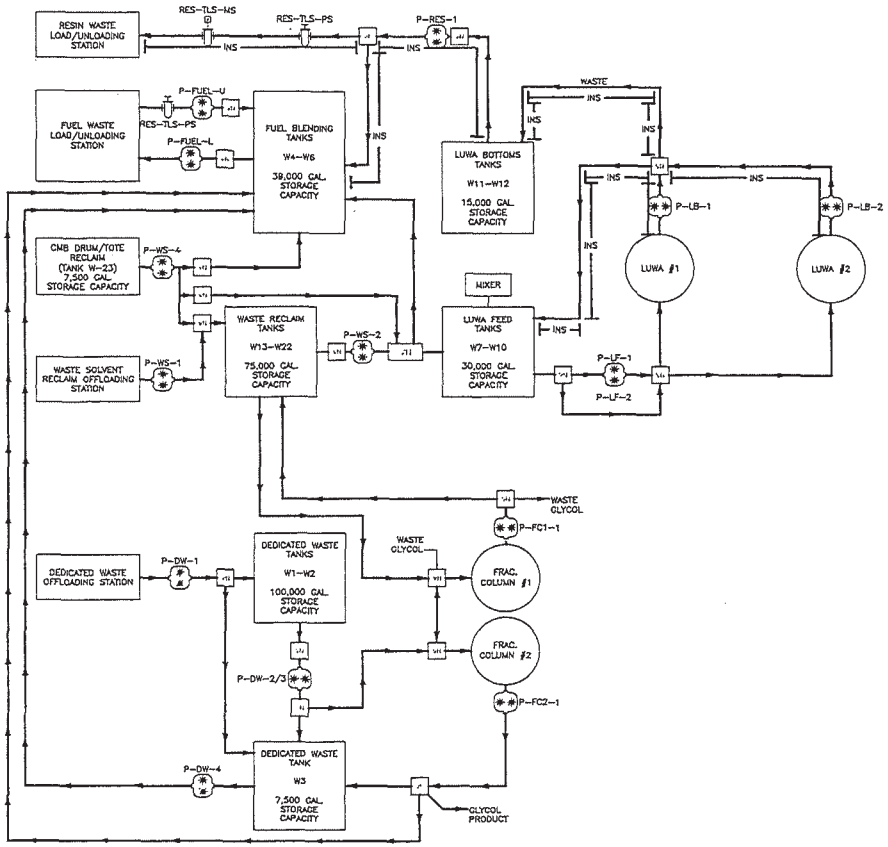

WASTE LOAD/UNLOAD

THE ENVIRONMENTAL QUALITY COMPANY

EQ RESOURCE RECOVERY, INC
36345 VAN BORN
ROMULUS, MI. 48174

HRC

Hubbell, Roth & Clark, Inc.
CONSULTING ENGINEERS

DATE	ADDITIONS AND/OR REVISIONS
07-17-06	MDEQ SUBMITTAL

DESIGNED KLC
DRAWN TWH
CHECKED
APPROVED

RE-ENGINEERING AND DESIGN OF EQ RESOURCE RECOVERY, INC. VAN BORN ROAD PLANT

PROCESS FLOW DIAGRAM

HRC JOB NO 20050683
SCALE NONE
DATE JULY 2006
SHEET NO P&ID-00

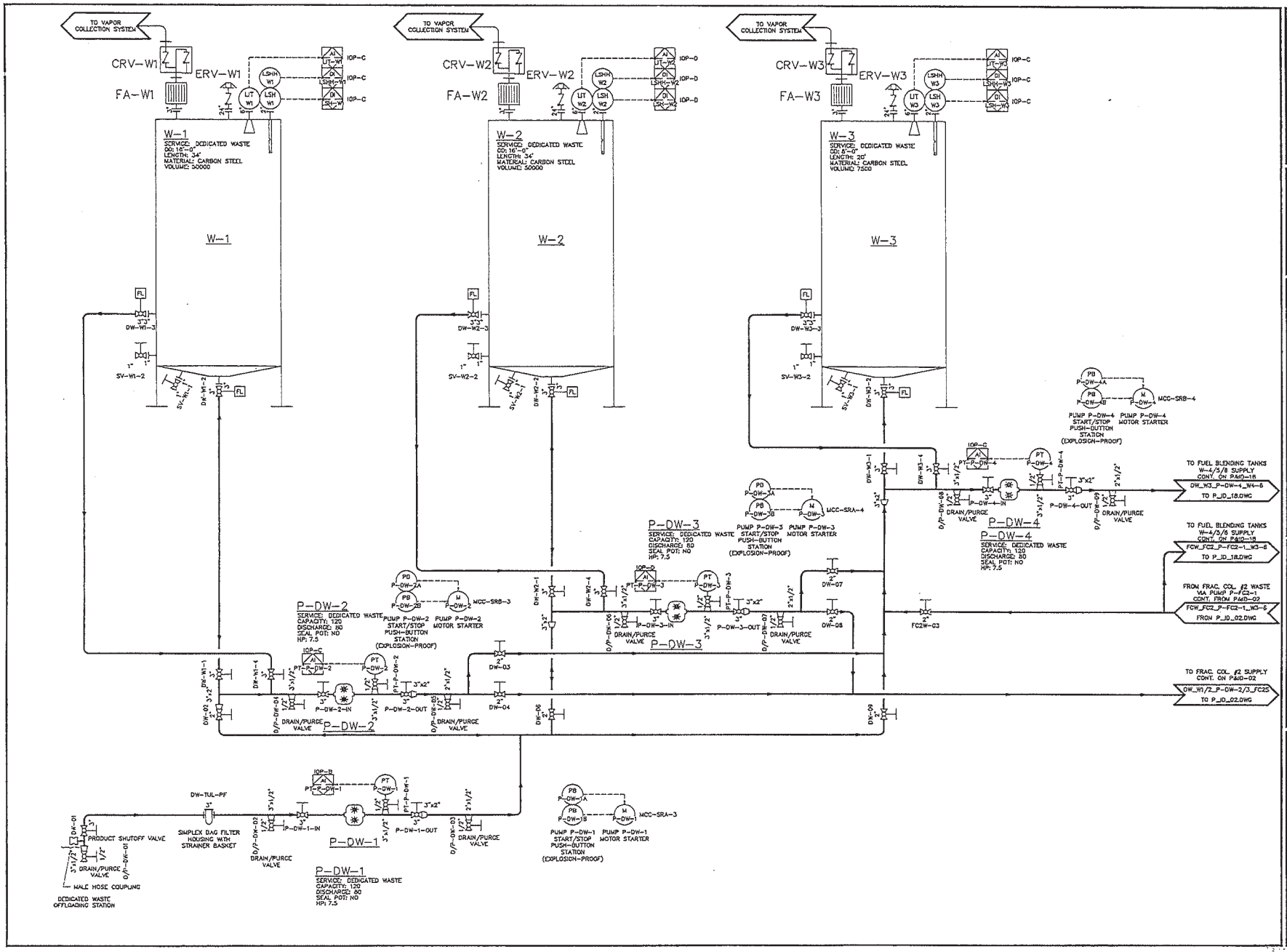

THE ENVIRONMENTAL QUALITY COMPANY

EQ RESOURCE RECOVERY, INC
36345 VAN BORN
ROMULUS, MI. 48174

HRC

Hubbell, Roth & Clark, Inc.
CONSULTING ENGINEERS

DATE	ADDITIONS AND/OR REVISIONS
07-17-06	MDEQ SUBMITTAL
05-24-06	OWNER'S REVIEW
02-07-06	MDEQ MEETING
02-01-06	OWNER'S REVIEW

DESIGNED KLC
DRAWN TWH
CHECKED
APPROVED

RE-ENGINEERING AND DESIGN OF EQ RESOURCE RECOVERY, INC. VAN BORN ROAD PLANT

DEDICATED PROCESS

HRC JOB NO 20050683
SCALE NONE
DATE JULY 2006
SHEET NO P&ID-01

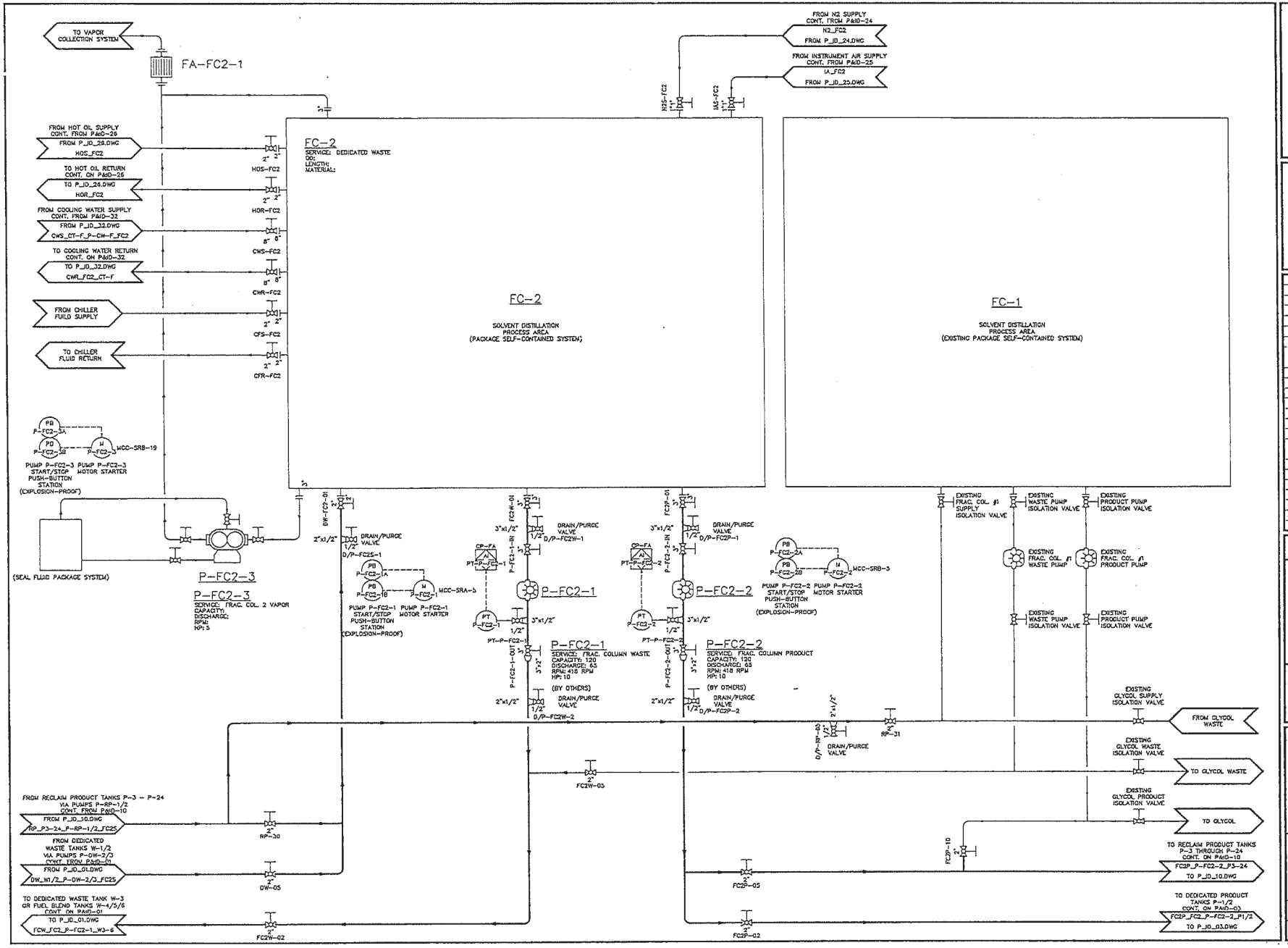

THE ENVIRONMENTAL QUALITY COMPANY

EQ RESOURCE RECOVERY, INC
35345 VAN BORN
ROMULUS, MI. 48174

HRC

Hubbell, Roth & Clark, Inc.
CONSULTING ENGINEERS

07-17-06	MDEQ SUBMITTAL
03-24-06	OWNER'S REVIEW
02-07-06	MDEQ MEETING
02-01-06	OWNER'S REVIEW
DATE	ADDITIONS AND/OR REVISIONS
DESIGNED	KLC
DRAWN	TWH
CHECKED	
APPROVED	

RE-ENGINEERING AND DESIGN OF EQ RESOURCE RECOVERY, INC. VAN BORN ROAD PLANT

DEDICATED PROCESS

HRC JOB NO 20030883	SCALE NONE
DATE JULY 2006	DRAWING NO P&ID-02

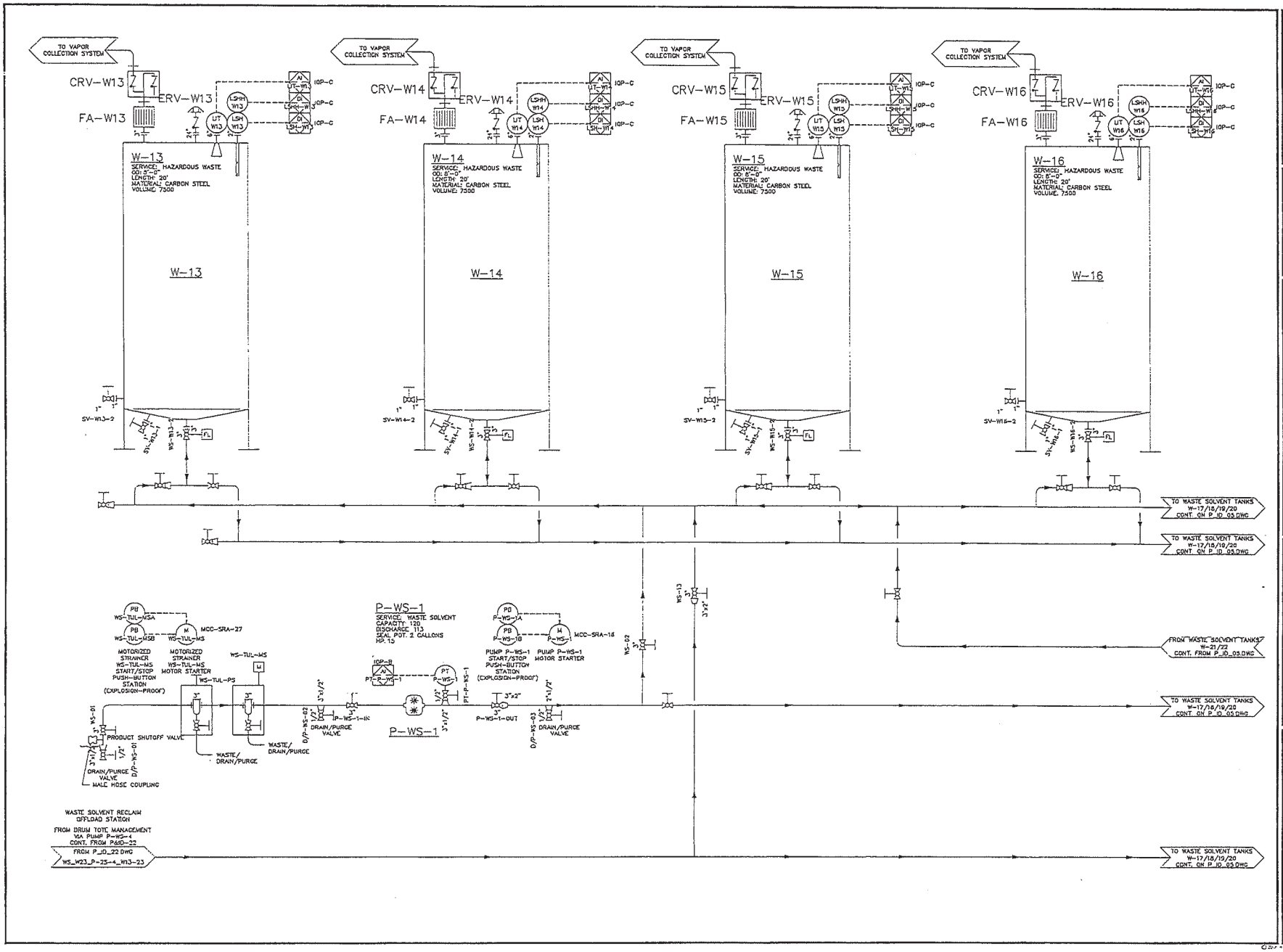

THE ENVIRONMENTAL QUALITY COMPANY

EQ RESOURCE RECOVERY, INC
36345 VAN BORN
ROMULUS, MI 48174

HRC
Hubbell, Roth & Clark, Inc.
CONSULTING ENGINEERS
555 HULET DRIVE
BLOOMFIELD HILLS, MICH.
P.O. BOX 824
48303 - 0824
PHONE: (248) 454-6300
FAX (1st. Floor): (248) 454-6312
FAX (2nd. Floor): (248) 334-2682
WEB SITE: http:// www.hrc-engr.com

DATE	ADDITIONS AND/OR REVISIONS
07-17-06	MDEQ SUBMITTAL
05-24-06	OWNER'S REVIEW
02-07-06	MDEQ MEETING
02-01-06	OWNER'S REVIEW

DESIGNED KLC
DRAWN TWH
CHECKED
APPROVED

RE-ENGINEERING AND DESIGN OF EQ RESOURCE RECOVERY, INC. VAN BORN ROAD PLANT

WASTE SOLVENT TANKS

HRC JOB NO 20050683
SCALE NONE
DATE JULY 2006
SHEET NO P&ID-04

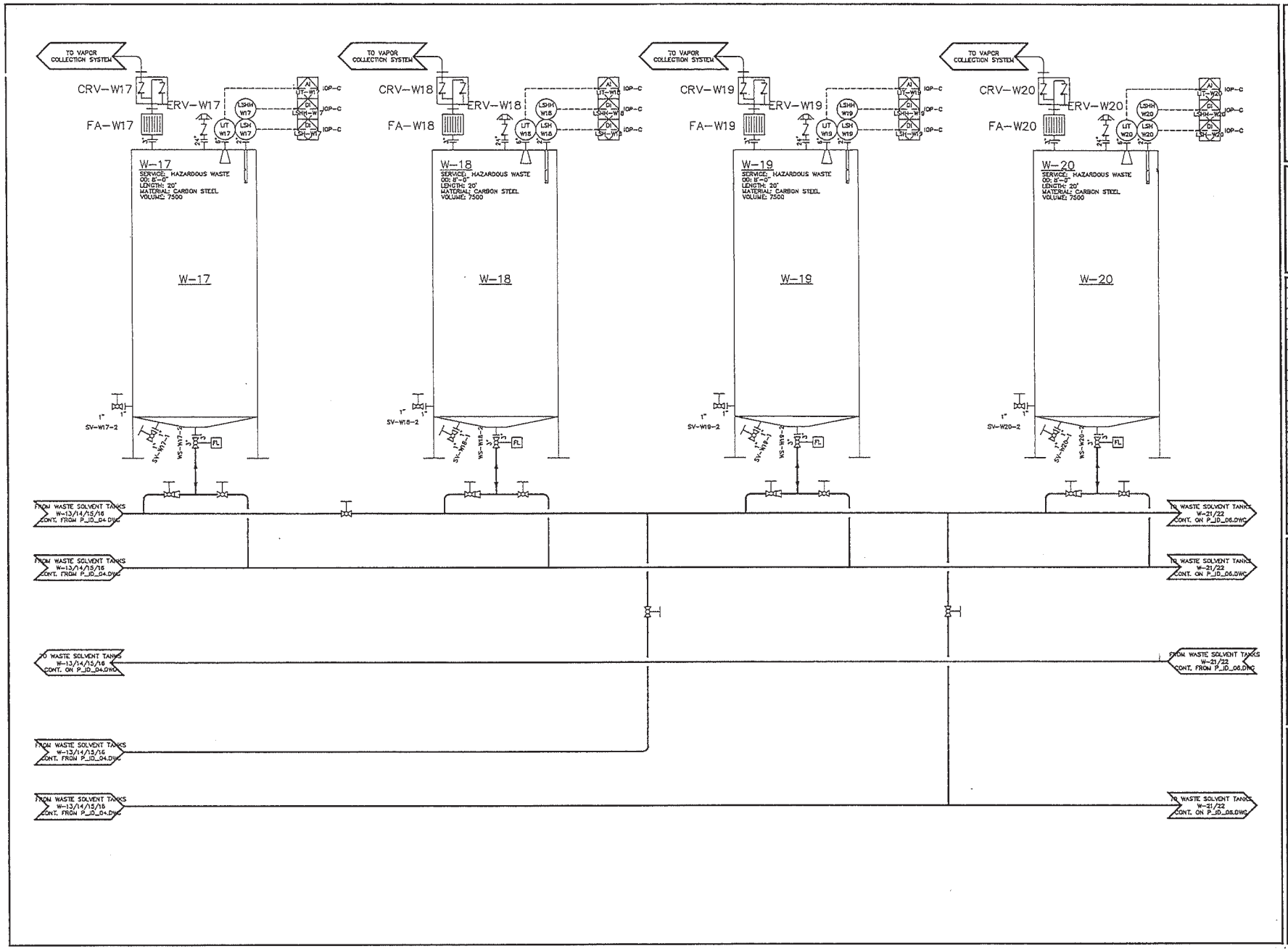

THE ENVIRONMENTAL QUALITY COMPANY

EQ RESOURCE RECOVERY, INC
36345 VAN BORN
ROMULUS, MI. 48174

HRC

Hubbell, Roth & Clark, Inc.
CONSULTING ENGINEERS

555 HULET DRIVE
BLOOMFIELD HILLS, MICH.
P.O. BOX 824
48303-0824

PHONE: (248) 454-6300
FAX (Tel. Fleet): (248) 454-6312
FAX (Ent. Fleet): (248) 338-2582
WEB SITE: http:// www.hrc-eng.com

DATE	ADDITIONS AND/OR REVISIONS
07-17-06	MDEQ SUBMITTAL
05-24-06	OWNER'S REVIEW
02-07-06	MDEQ MEETING
02-01-06	OWNER'S REVIEW

DESIGNED KLC
DRAWN TWH
CHECKED
APPROVED

RE-ENGINEERING AND DESIGN OF EQ RESOURCE RECOVERY, INC. VAN BORN ROAD PLANT

WASTE SOLVENT TANKS

HRC JOB NO 20050583
SCALE NONE
DATE JULY 2006
SHEET NO P&ID-05

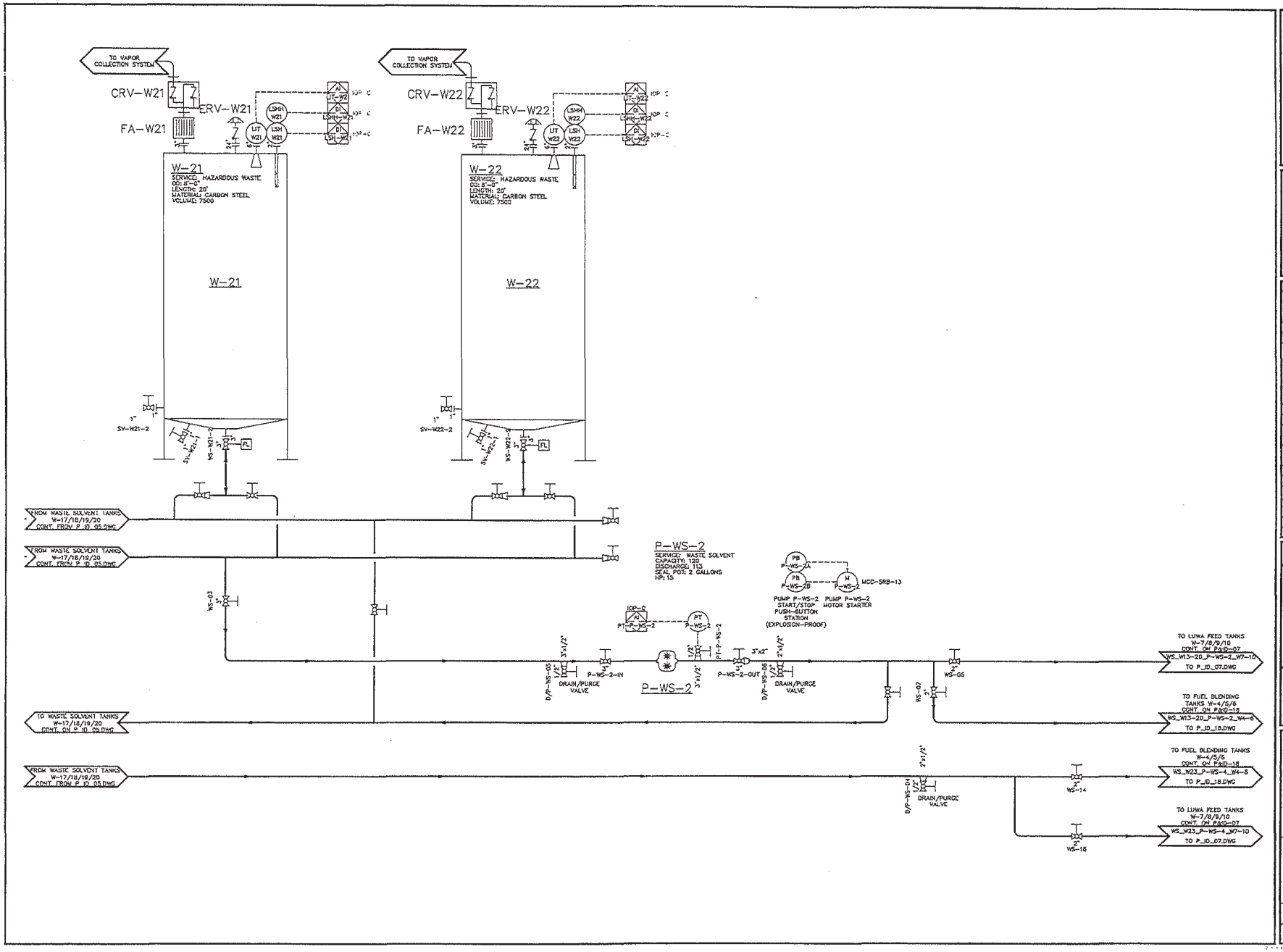

THE ENVIRONMENTAL QUALITY COMPANY

EQ RESOURCE RECOVERY, INC
36345 VAN BORN
ROMULUS, MI. 48174

HRC
Hubbell, Roth & Clark, Inc.
CONSULTING ENGINEERS
555 HULET DRIVE
BLOOMFIELD HILLS, MICH.
P.O. BOX 824
48303-0824
PHONE: (248) 454-6300
FAX (Tel. Fleet): (248) 454-6312
FAX (Dist Fleet): (248) 338-3632
WEB SITE: http://www.hrc-engr.com

DATE	ADDITIONS AND/OR REVISIONS
07-17-06	MDEQ SUBMITTAL
05-24-06	OWNER'S REVIEW
02-07-06	MDEQ MEETING
02-01-06	OWNER'S REVIEW

DESIGNED KLC
DRAWN TWH
CHECKED
APPROVED

RE-ENGINEERING AND DESIGN OF EQ RESOURCE RECOVERY, INC. VAN BORN ROAD PLANT

WASTE SOLVENT TANKS

HRC JOB NO 20050683
SCALE NONE
DATE JULY 2006
SHEET NO P&ID-06

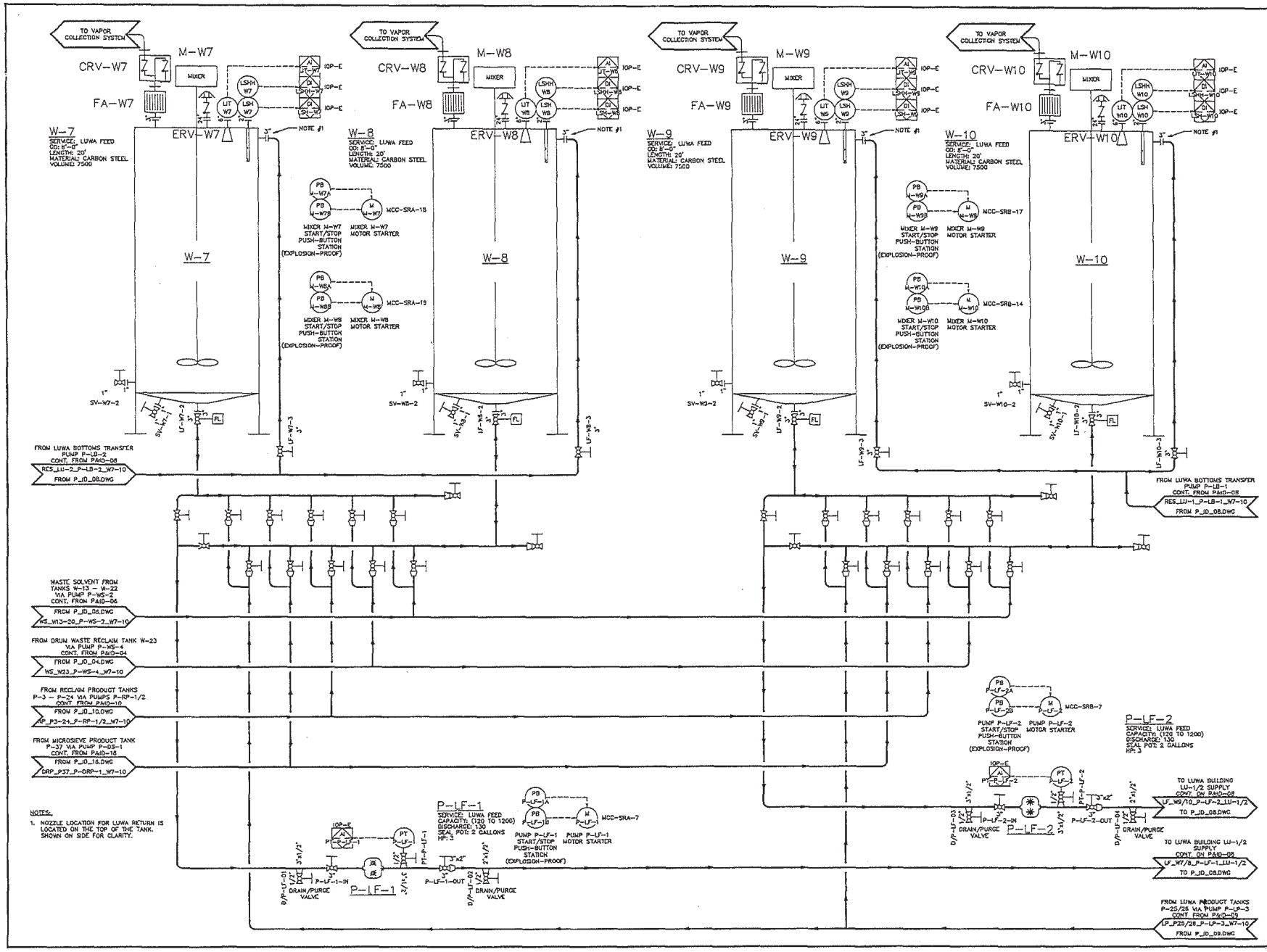

THE ENVIRONMENTAL QUALITY COMPANY

EQ RESOURCE RECOVERY, INC
35345 VAN BORN
ROMULUS, MI. 48174

HRC

Hubbell, Roth & Clark, Inc.
CONSULTING ENGINEERS

555 HULET DRIVE, BLOOMFIELD HILLS, MICH. — P.O. BOX 824, 48303-0824
PHONE: (248) 454-6300
FAX (Tel. Fixed): (248) 454-6312
FAX (Tel. Fixed): (248) 334-2692
WEB SITE: http:// www.hrc-eng.com

DATE	ADDITIONS AND/OR REVISIONS
07-17-06	MDEQ SUBMITTAL
05-24-06	OWNER'S REVIEW
02-07-06	MDEQ MEETING
02-01-06	OWNER'S REVIEW

DESIGNED: KLC
DRAWN: TWH
CHECKED:
APPROVED:

RE-ENGINEERING AND DESIGN OF EQ RESOURCE RECOVERY, INC. VAN BORN ROAD PLANT

LUWA PROCESS

HRC JOB NO: 20050683
SCALE: NONE
DATE: JULY 2006
SHEET NO: P&ID-07

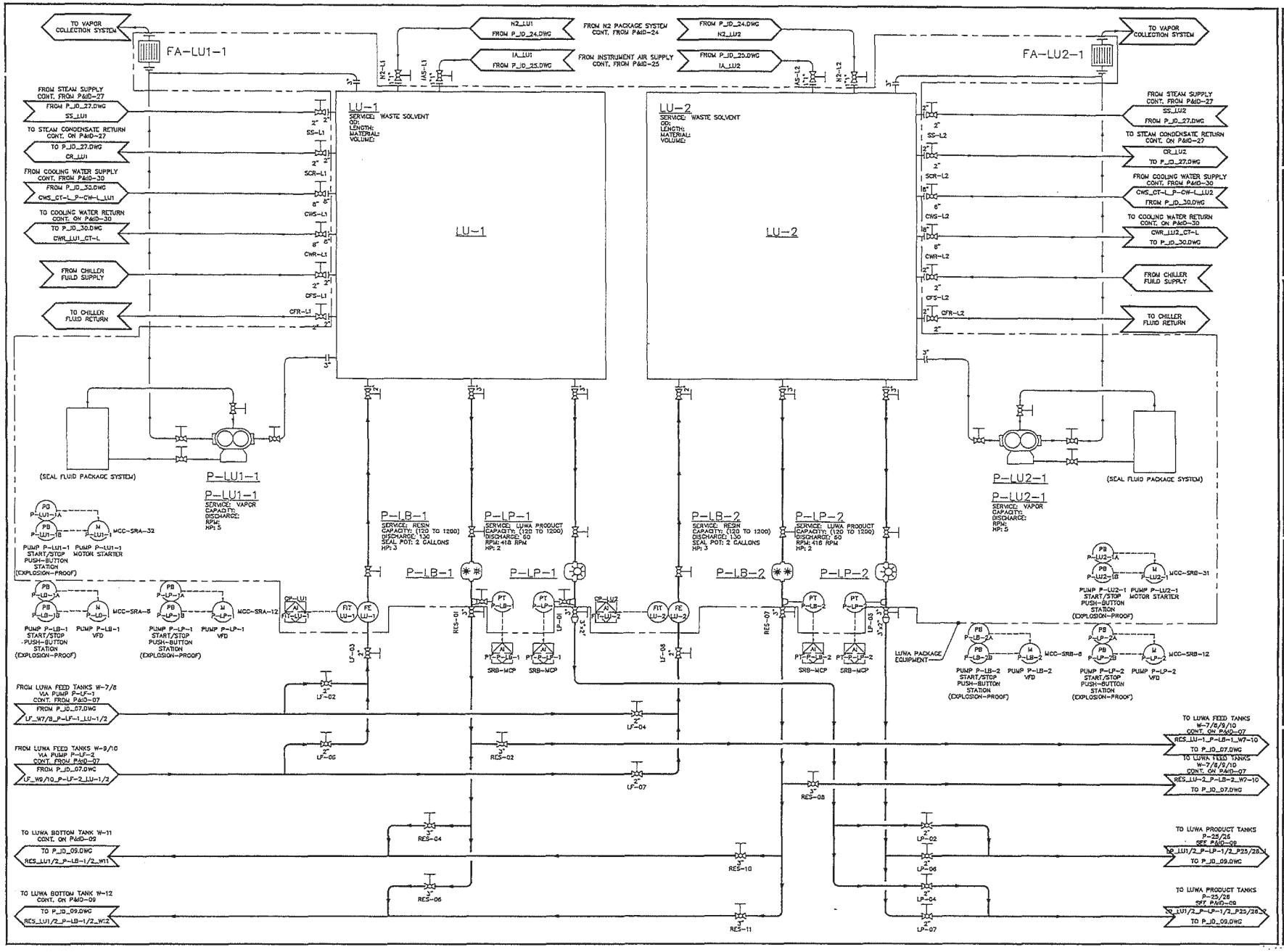

THE ENVIRONMENTAL QUALITY COMPANY

EQ RESOURCE RECOVERY, INC
36345 VAN BORN
ROMULUS, MI 48174

HRC
Hubbell, Roth & Clark, Inc.
CONSULTING ENGINEERS
655 MIDDLE DRIVE
BIRMINGHAM MILLS, MICH.
P.O. BOX 824
48303-0824
PHONE: (248) 454-6300
FAX (Tel. Phone): (248) 454-6312
FAX (Dat. Phone): (248) 334-2512
WEB SITE: http:// www.hrc-engr.com

DATE	ADDITIONS AND/OR REVISIONS
07-17-08	MDEQ SUBMITTAL
05-24-08	OWNER'S REVIEW
02-07-08	MDEQ MEETING
02-01-08	OWNER'S REVIEW

DESIGNED KLC
DRAWN TWH
CHECKED
APPROVED

RE-ENGINEERING AND DESIGN OF EQ RESOURCE RECOVERY, INC. VAN BORN ROAD PLANT

LUWA PROCESS

HRC JOB NO 20050683
SCALE NONE
DATE JULY 2008
SHEET NO P&ID-08

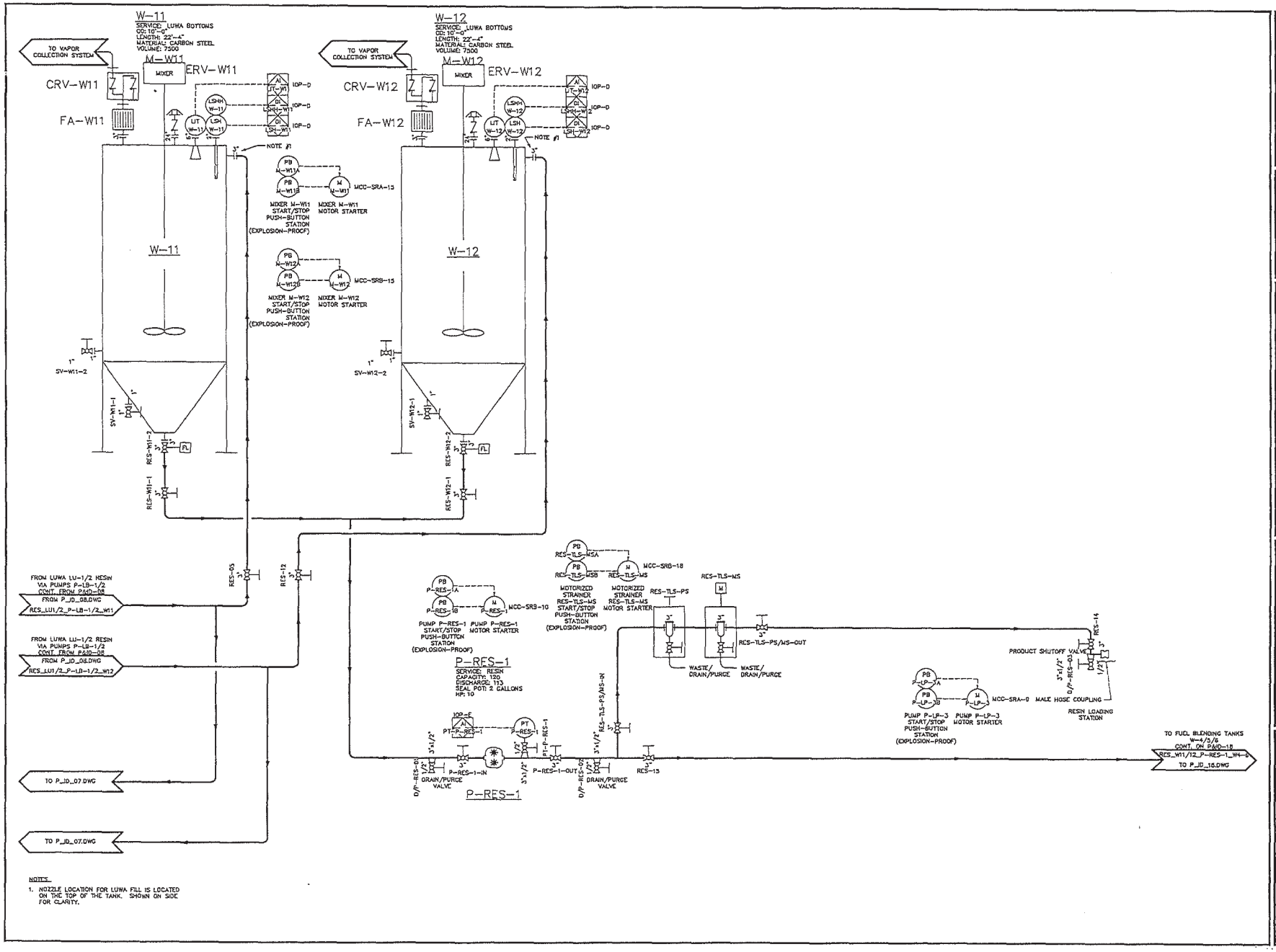

NOTES:

1. NOZZLE LOCATION FOR LUWA FILL IS LOCATED ON THE TOP OF THE TANK. SHOWN ON SIDE FOR CLARITY.

THE ENVIRONMENTAL QUALITY COMPANY

EQ RESOURCE RECOVERY, INC
35345 VAN BORN
ROMULUS, MI. 48174

HRC

Hubbell, Roth & Clark, Inc.
CONSULTING ENGINEERS

DATE	ADDITIONS AND/OR REVISIONS
07-17-06	MDEQ SUBMITTAL
05-24-06	OWNER'S REVIEW
02-07-06	MDEQ MEETING
02-01-06	OWNER'S REVIEW

DESIGNED KLC
DRAWN TWH
CHECKED
APPROVED

RE-ENGINEERING AND DESIGN OF EQ RESOURCE RECOVERY, INC. VAN BORN ROAD PLANT

LUWA PROCESS

HRC JOB NO 20050883	SCALE NONE
DATE JULY 2006	SHEET NO P&ID-09

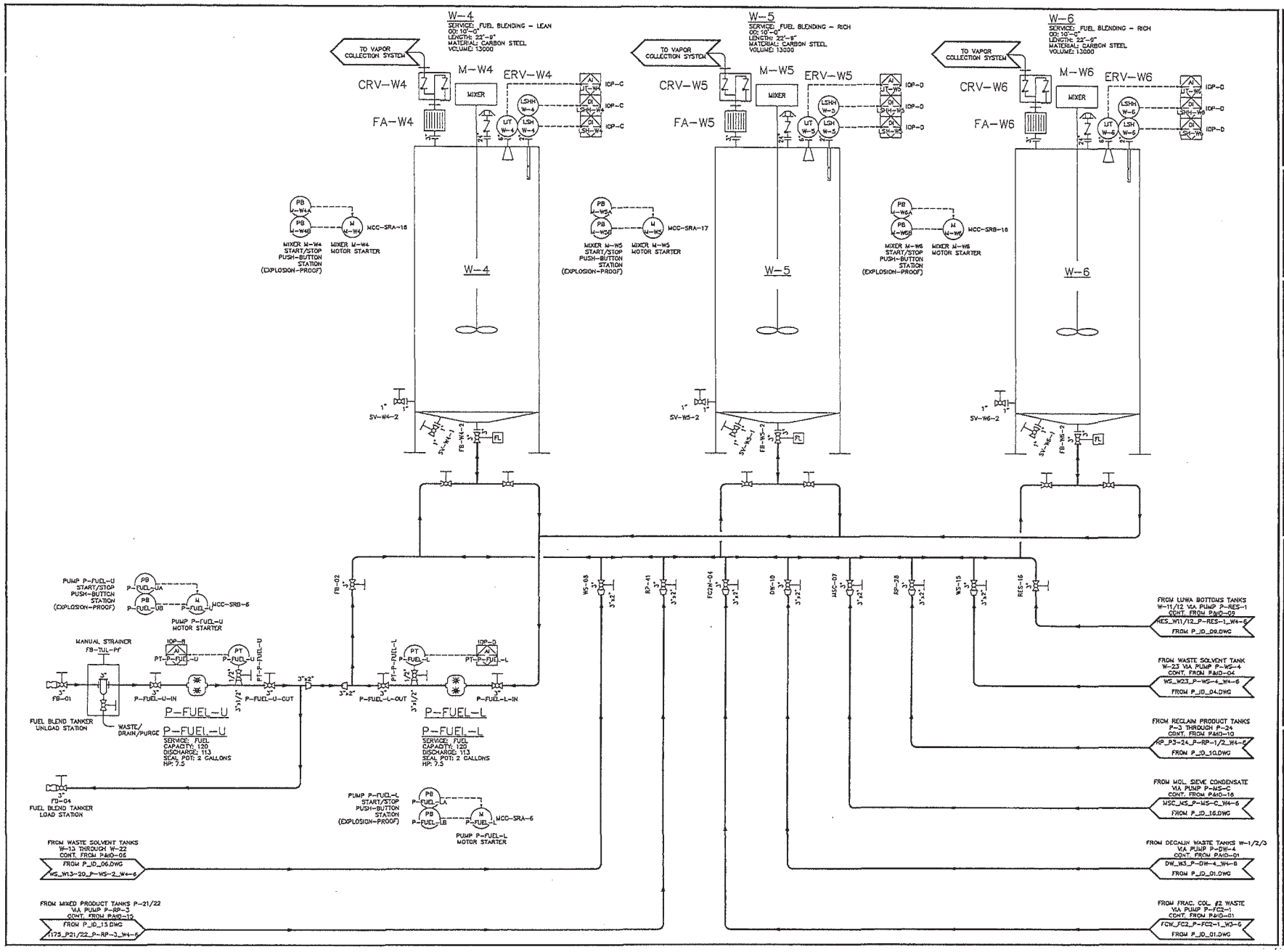

THE ENVIRONMENTAL QUALITY COMPANY

EQ RESOURCE RECOVERY, INC
36345 VAN BORN
ROMULUS, MI 48174

HRC
Hubbell, Roth & Clark, Inc.
CONSULTING ENGINEERS
555 HULEY DRIVE
BLOOMFIELD HILLS, MICH.
P.O. BOX 824
48303 - 0824
PHONE: (248) 454-6300
FAX (Tel. Phone): (248) 454-6312
FAX (Fax. Phone): (248) 338-3092
WEB SITE: http:// www.hrc-eng.com

DATE	ADDITIONS AND/OR REVISIONS
07-17-06	MDEQ SUBMITTAL
05-24-06	OWNER'S REVIEW
02-07-06	MDEQ MEETING
02-01-06	OWNER'S REVIEW

DESIGNED KLC
DRAWN TWH
CHECKED
APPROVED

RE-ENGINEERING AND DESIGN OF EQ RESOURCE RECOVERY, INC. VAN BORN ROAD PLANT

FUEL BLEND TANKS

HRC JOB NO	SCALE
20050683	NONE
DATE	SHEET NO
JULY 2006	P&ID-18

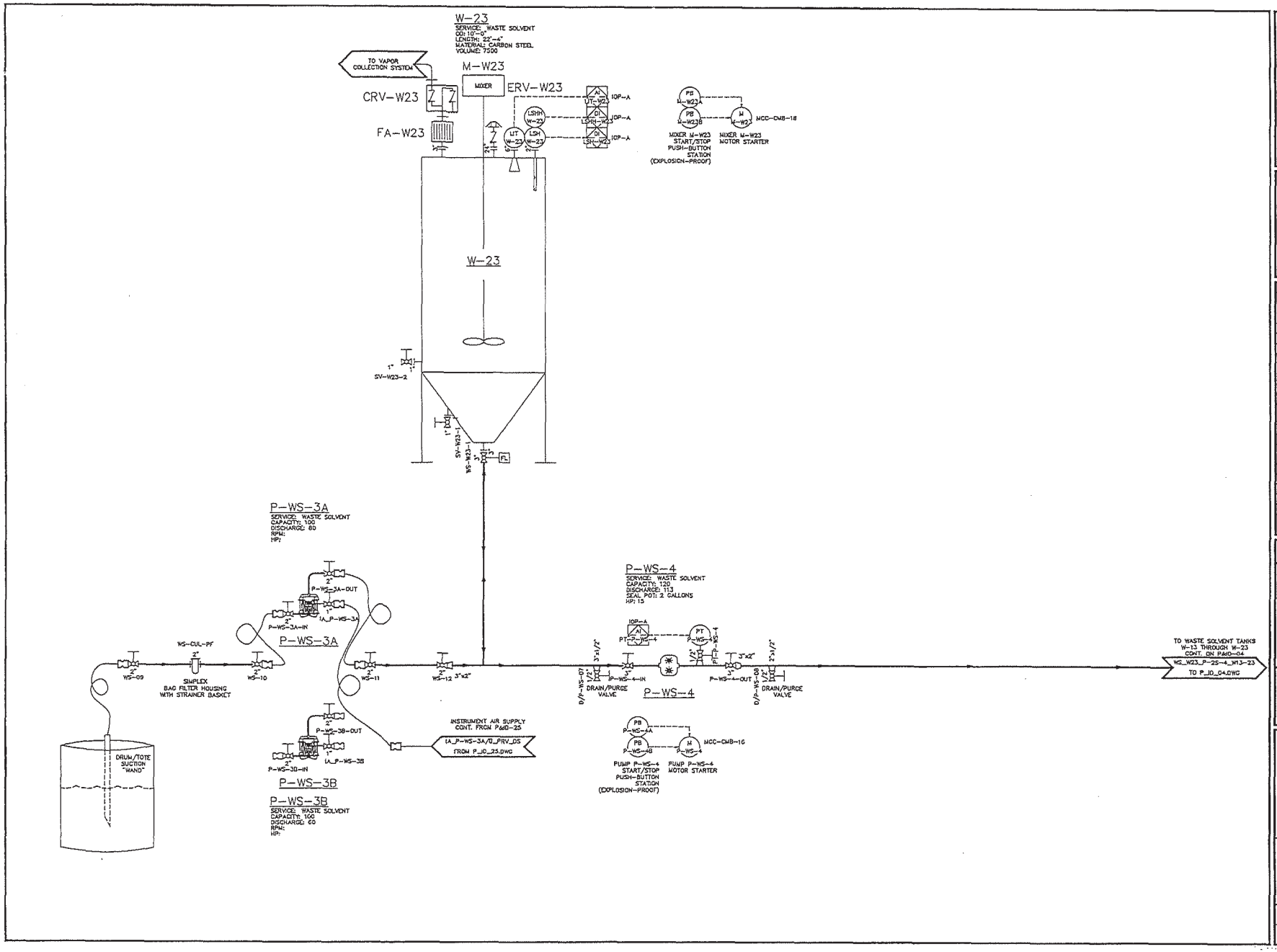

THE ENVIRONMENTAL QUALITY COMPANY

EQ RESOURCE RECOVERY, INC
38345 VAN BORN
ROMULUS, MI. 48174

HRC

Hubbell, Roth & Clark, Inc.
CONSULTING ENGINEERS
555 HULET DRIVE
BLOOMFIELD HILLS, MICH.
P.O. BOX 824
48303 - 0824
PHONE: (248) 454-6300
FAX (1st. Floor): (248) 464-8312
FAX (2nd. Floor): (248) 338-2642
WEB SITE: http:// www.hrc-engr.com

DATE	ADDITIONS AND/OR REVISIONS
07-17-06	MDEQ SUBMITTAL
05-24-06	OWNER'S REVIEW
02-07-06	MDEQ MEETING
02-01-06	OWNER'S REVIEW

DESIGNED KLC
DRAWN TWH
CHECKED
APPROVED

RE-ENGINEERING AND DESIGN OF EQ RESOURCE RECOVERY, INC. VAN BORN ROAD PLANT

DRUM/TOTE UNLOAD AND WASTE SOLVENT TANK

HRC JOB NO	SCALE
20050683	NONE
DATE JULY 2006	SHEET NO P&ID-22

PUMP SCHEDULE

DESIGNATION	SERVICE	AREA	LIQUID CHARACTERISTICS pH	SP. GR.	VISC. SSU	MAX TEMP. DEG F	CAPACITY GPM (GPH)	DISCHARGE PSIG	SIZE	AVAILABLE NPSH, FT.	DESIGN BASE	PUMP STYLE	METALLIC MATERIALS	ELASTOMERS	SEAL	MOTOR DATA RPM	HP	VOLTS	FLA	REMARKS	DRAWING #	INLET FLANGE	OUTLET FLANGE
P-DW-1	DEDICATED WASTE TANKER UNLOADING	AREA "B"	5 TO 10	0.8	40	100	120	80	3"		VIKING	INTERNAL GEAR	DUCTILE IRON	KALREZ	MECH	560 RPM	7.5	480V - 3PH	11		P_ID_01.DWG		
P-DW-2	DEDICATED WASTE TRANSFER	PUMP & VALVE GALLERY	5 TO 10	0.8	40	100	120	80	3"		VIKING	INTERNAL GEAR	DUCTILE IRON	KALREZ	MECH	560 RPM	7.5	480V - 3PH	11		P_ID_01.DWG		
P-DW-3	DEDICATED WASTE TRANSFER	PUMP & VALVE GALLERY	5 TO 10	0.8	40	100	120	80	3"		VIKING	INTERNAL GEAR	DUCTILE IRON	KALREZ	MECH	560 RPM	7.5	480V - 3PH	11		P_ID_01.DWG		
P-DW-4	DEDICATED WASTE TRANSFER	PUMP & VALVE GALLERY	6 TO 10	0.8	40	100	120	80	3"		VIKING	INTERNAL GEAR	DUCTILE IRON	KALREZ	MECH	560 RPM	7.5	480V - 3PH	11		P_ID_01.DWG		
P-FC2-1	TRANSFER FC-2 TO WASTE TANK W-3 OR FUEL BLEND	SOLVENT RECLAMATION	5 TO 10	0.8	40	100	120	65	3"		BLACKMER SNP3	VANE	DUCTILE IRON	TEFLON	MECH	418 RPM	10	480V - 3PH	14	METERING	P_ID_02.DWG		
P-WS-1	UNLOAD WASTES TO TANKS	AREA "B"	2 TO 12	.7 TO 1.2	40 TO 100	100	120	113	3"		VIKING	INTERNAL GEAR	DUCTILE IRON	TEFLON	DOUBLE MECH	418 RPM	15	480V - 3PH	21		P_ID_04.DWG		
P-WS-2	TRANSFER WASTES TO LUWA FEED TANKS	PUMP & VALVE GALLERY	4 TO 12	.7 TO 1.2	40 TO 100	100	120	113	3"		VIKING	INTERNAL GEAR	DUCTILE IRON	TEFLON	DOUBLE MECH	418 RPM	15	480V - 3PH	21		P_ID_06.DWG		
P-LF-1	TRANSFER WASTES TO LUWA	AREA "E"	4 TO 12	.7 TO 1.5	40 TO 2500	200	(120 TO 1200)	130	3"		VIKING	INTERNAL GEAR	DUCTILE IRON	TEFLON	DOUBLE MECH	418 RPM	3	480V - 3PH	4.8	ABRASIVE	P_ID_07.DWG		
P-LF-2	TRANSFER WASTES TO LUWA	AREA "E"	4 TO 12	.7 TO 1.5	40 TO 2500	200	(120 TO 1200)	130	3"		VIKING	INTERNAL GEAR	DUCTILE IRON	TEFLON	DOUBLE MECH	418 RPM	3	480V - 3PH	4.8	ABRASIVE	P_ID_07.DWG		
P-LB-1	TRANSFER LUWA BOTTOMS TO TANK	LUWA BUILDING	4 TO 12	0.8 TO 1.5	2,500	200	(120 TO 1200)	130	??		VIKING	INTERNAL GEAR	DUCTILE IRON	TEFLON	DOUBLE MECH	418 RPM	3	480V - 3PH	4.8	ABRASIVE	P_ID_08.DWG		
P-LB-2	TRANSFER LUWA BOTTOMS TO TANK	LUWA BUILDING	4 TO 12	0.8 TO 1.5	2,500	200	(120 TO 1200)	130	??		VIKING	INTERNAL GEAR	DUCTILE IRON	TEFLON	DOUBLE MECH	418 RPM	3	480V - 3PH	4.8	ABRASIVE	P_ID_08.DWG		
P-RES-1	TRANSFER RESIN TO FUEL BLENDING TANKS	AREA "E"	4 TO 12	0.8 TO 1.5	2,500	200	120	113	3"		VIKING	INTERNAL GEAR	DUCTILE IRON	TEFLON	DOUBLE MECH	418 RPM	10	480V - 3PH	14	ABRASIVE	P_ID_09.DWG		
P-MS-C	MOLECULAR SIEVE CONDENSATE	MOLECULAR SIEVE	4 TO 12	.7 TO .8	40	120	120	65	3"		BLACKMER SNP 3	VANE	316 SST	TEFLON	MECH	418 RPM	7.5	480V - 3PH	11	METERING	P_ID_16.DWG		
P-MS-F	FEED TO MOLECULAR SIEVE FROM TANKS	AREA "E"	4 TO 12	.7 TO .8	40	120	120	65	3"		BLACKMER SNP 3	VANE	316 SST	TEFLON	MECH	418 RPM	10	480V - 3PH	14	METERING	P_ID_16.DWG		
P-FUEL-L	TRANSFER FROM WASTE TANKS	PUMP & VALVE GALLERY	4 TO 12	.7 TO 1.5	40 TO 100	120	120	113	3"		VIKING	INTERNAL GEAR	DUCTILE IRON	TEFLON	DOUBLE MECH	418 RPM	7.5	480V - 3PH	11	ABRASIVE	P_ID_18.DWG		
P-FUEL-U	TRANSFER FROM WASTE TANKS	AREA "B"	4 TO 12	.7 TO 1.5	40 TO 100	120	120	113	3"		VIKING	INTERNAL GEAR	DUCTILE IRON	TEFLON	DOUBLE MECH	418 RPM	7.5	480V - 3PH	11	ABRASIVE	P_ID_18.DWG		
P-WS-3A	TRANSFER WASTES FROM DRUMS/TOTES TO WASTE TANK	AREA "A"	4 TO 12	0.8	2,500	120	100	60	3"		VERSAMATIC	AIR DIAPHRAM	DUCTILE IRON	TEFLON						NONE	P_ID_22.DWG		
P-WS-3B	TRANSFER WASTES FROM DRUMS/TOTES TO WASTE TANK	AREA "A"	4 TO 12	0.8	2,500	120	100	60	3"		VERSAMATIC	AIR DIAPHRAM	DUCTILE IRON	TEFLON						NONE	P_ID_22.DWG		
P-WS-4	TRANSFER WASTES TO BLEND TANK, FUEL BLENDING, WASTE TANKS, OR LUWA FEED TANKS	AREA "A"	4 TO 12	0.8 to 1.5	2,500	120	120	113	3"		VIKING	INTERNAL GEAR	DUCTILE IRON	TEFLON	DOUBLE MECH	418 RPM	15	480V - 3PH	21	ABRASIVE	P_ID_22.DWG		

MIXER SCHEDULE

DESIGNATION	SERVICE	AREA	LIQUID CHARACTERISTICS SP. GR.	VISC. (cp)	MAX TEMP. DEG F	NOZZLE BENDING MOMENT (FT-LBS)	REACTION TORQUE (FT-LBS)	TANK MOUNTING HEIGHT (INCHES)	WEIGHT TOTAL MOUNTED (LBS.)	DESIGN BASE	SHAFT DIAMETER (INCHES)	SHAFT/COUPLING MATERIAL	SHAFT EXTENSION (INCHES)	SHAFT SPEED (RPM)	IMPELLER MATERIAL	IMPELLER DIAMETER (INCHES)	EXTENSION FROM MOUNTING FACE (INCHES) #4	#3	#2	#1	MOTOR DATA RPM	HP	VOLTS	FLA	REMARKS	DRAWING #	INLET FLANGE	OUTLET FLANGE
M-W10	MIXER MOTOR FOR LUWA FEED TANK W-10	AREA "C"	1.1	100	70	1860	1309	12	1353	CHEMINEER 3HTA-5	3	CARBON STEEL	180	45	CARBON STEEL	53.50			117	189	1200	5	230/460			P_ID_07.DWG		
M-W7	MIXER MOTOR FOR LUWA FEED TANK W-7	AREA "F"	1.1	100	70	1809	1309	12	1353	CHEMINEER 3HTA-5	3	CARBON STEEL	180	45	CARBON STEEL	53.50			117	189	1200	5	230/460			P_ID_07.DWG		
M-W8	MIXER MOTOR FOR LUWA FEED TANK W-8	AREA "F"	1.1	100	70	1809	1309	12	1353	CHEMINEER 3HTA-5	3	CARBON STEEL	180	45	CARBON STEEL	53.50			117	189	1200	5	230/460			P_ID_07.DWG		
M-W9	MIXER MOTOR FOR LUWA FEED TANK W-9	AREA "E"	1.1	100	70	1860	1309	12	1353	CHEMINEER 3HTA-5	3	CARBON STEEL	180	45	CARBON STEEL	53.50			117	189	1200	5	230/460			P_ID_07.DWG		
M-W11	MIXER MOTOR FOR LUWA BOTTOMS TANK W-11	AREA "D"	1.2	4000	70	4005	2607	10	2010	CHEMINEER 4HTA-15	3.5	CARBON STEEL	198	68	CARBON STEEL	47.50A	78	118.0 (STEP)	138	198	1800	15	230/460		EXTENSION FROM MOUNTING FACE #3 - IS A 3.5/3.0" STEP	P_ID_09.DWG		
M-W12	MIXER MOTOR FOR LUWA BOTTOMS TANK W-12	AREA "D"	1.2	4000	70	4005	2607	10	2010	CHEMINEER 4HTA-15	3.5	CARBON STEEL	198	68	CARBON STEEL	47.50A	78	118.0 (STEP)	138	198	1800	15	230/460		EXTENSION FROM MOUNTING FACE #3 - IS A 3.5/3.0" STEP	P_ID_09.DWG		
M-W4	MIXER MOTOR FOR FUEL BLENDING - LEAN TANK W-4	AREA "C"	1.1	2000	70	3141	2154	14	1910	CHEMINEER 3GTA-7.5	3	CARBON STEEL	218	45	CARBON STEEL	49.00		98.0	158	218	1200	7.5	230/460			P_ID_18.DWG		
M-W5	MIXER MOTOR FOR FUEL BLENDING - RICH TANK W-5	AREA "C"	1.1	2000	70	3141	2154	14	1910	CHEMINEER 3GTA-7.5	3	CARBON STEEL	218	45	CARBON STEEL	49.00		98.0	158	218	1200	7.5	230/460			P_ID_18.DWG		
M-W6	MIXER MOTOR FOR FUEL BLENDING - RICH TANK W-6	AREA "E"	1.1	2000	70	3141	2154	14	1910	CHEMINEER 3GTA-7.5	3	CARBON STEEL	218	45	CARBON STEEL	49.00		98.0	158	218	1200	7.5	230/460			P_ID_18.DWG		
M-W23	MIXER MOTOR FOR WASTE SOLVENT TANK W-23	AREA "A"	1.2	4000	70	3055	1871	10	1882	CHEMINEER 4HTA-10	3.5	CARBON STEEL	202	88	CARBON STEEL	43.63	82	122.0 (STEP)	142	202	1800	10	230/460		EXTENSION FROM MOUNTING FACE #3 IS A 3.5/3.0" STEP	P_ID_22.DWG		

STRAINER SCHEDULE

DESIGNATION	SERVICE	AREA	CAPACITY (GPM)	FILTER TYPE	SCREEN	DESIGN BASE	CONNECTIONS	METALLIC MATERIALS	ELASTOMERS	MOTOR DATA RPM	HP	VOLTS	FLA	REMARKS	DRAWING #	INLET FLANGE	INLET FLANGE
WS-TUL-PS	WASTE SOLVENT	WASTE UNLOAD	120	WEDGEWIRE STRAINER WITH MANUAL SCRAPER	1/8 INCH	HELLEN	3" FLANGE	CARBON STEEL	TEFLON						P_ID_04.DWG		
WS-TUL-MS	WASTE SOLVENT	WASTE UNLOAD	120	WEDGEWIRE STRAINER WITH MOTORIZED SCRAPER	30 MESH	HELLEN	3" FLANGE	CARBON STEEL	TEFLON						P_ID_04.DWG		
RES-TLS-PS	LUWA BOTTOMS (RESIN)	WASTE LOAD	120	WEDGEWIRE STRAINER WITH MANUAL SCRAPER	1/8 INCH	HELLEN	3" FLANGE	CARBON STEEL	TEFLON						P_ID_09.DWG		
RES-TLS-MS	LUWA BOTTOMS (RESIN)	WASTE LOAD	120	WEDGEWIRE STRAINER WITH MOTORIZED SCRAPER	30 MESH	HELLEN	3" FLANGE	CARBON STEEL	TEFLON						P_ID_02.DWG		

FILTER SCHEDULE

DESIGNATION	SERVICE	AREA	CAPACITY (GPM)	FILTER TYPE	SCREEN	DESIGN BASE	CONNECTIONS	METALLIC MATERIALS	ELASTOMERS	REMARKS	DRAWING #	INLET FLANGE	OUTLET FLANGE
DW-TUL-PF	DEDICATED WASTE	WASTE UNLOAD	120	SIMPLEX BAG FILTER HOUSING	30 MESH	FSI MODEL FSNP-40	3" FLANGE	CARBON STEEL	KALREZ		P_ID_01.DWG		
FB-TUL-PF	WASTE FUEL UNLOADING	WASTE UNLOAD	120	SIMPLEX BAG FILTER HOUSING	30 MESH	FSI MODEL FSNP-40	3" FLANGE	CARBON STEEL	TEFLON		P_ID_18.DWG		
WS-CUL-PF	WASTE SOLVENT	CMU BUILDING DRUM UNLOAD	120	SIMPLEX BAG FILTER HOUSING	30 MESH	FSI MODEL FSNP-40	2" FLANGE	304 STAINLESS STEEL	TEFLON		P_ID_22.DWG		

THE ENVIRONMENTAL QUALITY COMPANY

EQ RESOURCE RECOVERY, INC
36345 VAN BORN
ROMULUS, MI. 48174

HRC

Hubbell, Roth & Clark, Inc.
CONSULTING ENGINEERS
555 HULET DRIVE
BLOOMFIELD HILLS, MICH.
P.O. BOX 824
48303-0824
PHONE: (248) 454-6300
FAX (1st. Floor): (248) 454-6312
FAX (2nd. Floor): (248) 338-2592
WEB SITE: http://www.hrc-engr.com

DATE	REVISION
07-17-06	MDEQ SUBMITTAL
05-24-06	OWNER'S REVIEW
DATE	ADDITIONS AND/OR REVISIONS

DESIGNED KLC
DRAWN TWH
CHECKED
APPROVED

RE-ENGINEERING AND DESIGN OF EQ RESOURCE RECOVERY, INC. VAN BORN ROAD PLANT

PUMPS, MIXERS, STRAINER AND FILTER SCHEDULES

HRC JOB NO 20050683 | SCALE NONE
DATE JULY 2006 | SHEET NO P&ID-36

CONSERVATION VENT SCHEDULE

MANUFACTURER: PROTECTOSEAL
MODEL NUMBER: RE1854303
SIZE: 3"

DESIGNATION	AREA	DESCRIPTION	DRAWING #	INLET FLANGE	OUTLET FLANGE
CRV-W1	AREA "C"	CONSERVATION VENT FOR DEDICATED WASTE TANK W-1	P_ID_01.DWG		
CRV-W2	AREA "D"	CONSERVATION VENT FOR DEDICATED WASTE TANK W-2	P_ID_01.DWG		
CRV-W3	AREA "C"	CONSERVATION VENT FOR DEDICATED WASTE TANK W-3	P_ID_01.DWG		
CRV-W13	AREA "C"	CONSERVATION VENT FOR WASTE SOLVENT TANK W-13	P_ID_04.DWG		
CRV-W14	AREA "C"	CONSERVATION VENT FOR WASTE SOLVENT TANK W-14	P_ID_04.DWG		
CRV-W15	AREA "C"	CONSERVATION VENT FOR WASTE SOLVENT TANK W-15	P_ID_04.DWG		
CRV-W16	AREA "C"	CONSERVATION VENT FOR WASTE SOLVENT TANK W-16	P_ID_04.DWG		
CRV-W17	AREA "C"	CONSERVATION VENT FOR WASTE SOLVENT TANK W-17	P_ID_05.DWG		
CRV-W18	AREA "C"	CONSERVATION VENT FOR WASTE SOLVENT TANK W-18	P_ID_05.DWG		
CRV-W19	AREA "C"	CONSERVATION VENT FOR WASTE SOLVENT TANK W-19	P_ID_05.DWG		
CRV-W20	AREA "C"	CONSERVATION VENT FOR WASTE SOLVENT TANK W-20	P_ID_05.DWG		
CRV-W21	AREA "C"	CONSERVATION VENT FOR WASTE SOLVENT TANK W-21	P_ID_06.DWG		
CRV-W22	AREA "C"	CONSERVATION VENT FOR WASTE SOLVENT TANK W-22	P_ID_06.DWG		
CRV-W10	AREA "E"	CONSERVATION VENT FOR LUWA FEED TANK W-10	P_ID_07.DWG		
CRV-W7	AREA "E"	CONSERVATION VENT FOR LUWA FEED TANK W-7	P_ID_07.DWG		
CRV-W8	AREA "E"	CONSERVATION VENT FOR LUWA FEED TANK W-8	P_ID_07.DWG		
CRV-W9	AREA "E"	CONSERVATION VENT FOR LUWA FEED TANK W-9	P_ID_07.DWG		
CRV-W11	AREA "D"	CONSERVATION VENT FOR LUWA BOTTOMS TANK W-11	P_ID_09.DWG		
CRV-W12	AREA "D"	CONSERVATION VENT FOR LUWA BOTTOMS TANK W-12	P_ID_09.DWG		
CRV-W4	AREA "C"	CONSERVATION VENT FOR FUEL BLENDING - LEAN TANK W-4	P_ID_18.DWG		
CRV-W5	AREA "D"	CONSERVATION VENT FOR FUEL BLENDING - RICH TANK W-5	P_ID_18.DWG		
CRV-W6	AREA "D"	CONSERVATION VENT FOR FUEL BLENDING - RICH TANK W-6	P_ID_18.DWG		
CRV-W23	AREA "A"	CONSERVATION VENT FOR WASTE SOLVENT TANK W-23	P_ID_22.DWG		

EMERGENCY RELIEF VENT SCHEDULE

MANUFACTURER: PROTECTOSEAL
MODEL NUMBER: AXCS53324API
SIZE: 24"

DESIGNATION	AREA	DESCRIPTION	DRAWING #	INLET FLANGE	OUTLET FLANGE
ERV-W1	AREA "C"	EMERGENCY RELIEF VENT FOR DEDICATED WASTE TANK W-1	P_ID_01.DWG		
ERV-W2	AREA "D"	EMERGENCY RELIEF VENT FOR DEDICATED WASTE TANK W-2	P_ID_01.DWG		
ERV-W3	AREA "C"	CONSERVATION VENT FOR DEDICATED WASTE TANK W-3	P_ID_01.DWG		
ERV-W13	AREA "C"	EMERGENCY RELIEF VENT FOR WASTE SOLVENT TANK W-13	P_ID_04.DWG		
ERV-W14	AREA "C"	EMERGENCY RELIEF VENT FOR WASTE SOLVENT TANK W-14	P_ID_04.DWG		
ERV-W15	AREA "C"	EMERGENCY RELIEF VENT FOR WASTE SOLVENT TANK W-15	P_ID_04.DWG		
ERV-W16	AREA "C"	EMERGENCY RELIEF VENT FOR WASTE SOLVENT TANK W-16	P_ID_04.DWG		
ERV-W17	AREA "C"	EMERGENCY RELIEF VENT FOR WASTE SOLVENT TANK W-17	P_ID_05.DWG		
ERV-W18	AREA "C"	EMERGENCY RELIEF VENT FOR WASTE SOLVENT TANK W-18	P_ID_05.DWG		
ERV-W19	AREA "C"	EMERGENCY RELIEF VENT FOR WASTE SOLVENT TANK W-19	P_ID_05.DWG		
ERV-W20	AREA "C"	EMERGENCY RELIEF VENT FOR WASTE SOLVENT TANK W-20	P_ID_05.DWG		
ERV-W21	AREA "C"	EMERGENCY RELIEF VENT FOR WASTE SOLVENT TANK W-21	P_ID_06.DWG		
ERV-W22	AREA "C"	EMERGENCY RELIEF VENT FOR WASTE SOLVENT TANK W-22	P_ID_06.DWG		
ERV-W10	AREA "E"	EMERGENCY RELIEF VENT FOR LUWA FEED TANK W-10	P_ID_07.DWG		
ERV-W7	AREA "E"	EMERGENCY RELIEF VENT FOR LUWA FEED TANK W-7	P_ID_07.DWG		
ERV-W8	AREA "E"	EMERGENCY RELIEF VENT FOR LUWA FEED TANK W-8	P_ID_07.DWG		
ERV-W9	AREA "E"	EMERGENCY RELIEF VENT FOR LUWA FEED TANK W-9	P_ID_07.DWG		
ERV-W11	AREA "D"	EMERGENCY RELIEF VENT FOR LUWA BOTTOMS TANK W-11	P_ID_09.DWG		
ERV-W12	AREA "D"	EMERGENCY RELIEF VENT FOR LUWA BOTTOMS TANK W-12	P_ID_09.DWG		
ERV-W4	AREA "C"	EMERGENCY RELIEF VENT FOR FUEL BLENDING - LEAN TANK W-4	P_ID_18.DWG		
ERV-W5	AREA "D"	EMERGENCY RELIEF VENT FOR FUEL BLENDING - RICH TANK W-5	P_ID_18.DWG		
ERV-W6	AREA "D"	EMERGENCY RELIEF VENT FOR FUEL BLENDING - RICH TANK W-6	P_ID_18.DWG		
ERV-W23	AREA "A"	EMERGENCY RELIEF VENT FOR WASTE SOLVENT TANK W-23	P_ID_22.DWG		

FLAME ARRESTOR SCHEDULE

MANUFACTURER: PROTECTOSEAL
MODEL NUMBER: C25003
SIZE: 3"

DESIGNATION	AREA	DESCRIPTION	DRAWING #	INLET FLANGE	OUTLET FLANGE
FA-W1	AREA "C"	FLAME ARRESTOR FOR DEDICATED WASTE TANK W-1	P_ID_01.DWG		
FA-W2	AREA "D"	FLAME ARRESTOR FOR DEDICATED WASTE TANK W-2	P_ID_01.DWG		
FA-W3	AREA "C"	FLAME ARRESTOR FOR DEDICATED WASTE TANK W-3	P_ID_01.DWG		
FA-CC-1	SOLVENT RECLAMATION	FLAME ARRESTOR FOR FRAC COLUMN #2	P_ID_02.DWG		
FA-W13	AREA "C"	FLAME ARRESTOR FOR WASTE SOLVENT TANK W-13	P_ID_04.DWG		
FA-W14	AREA "C"	FLAME ARRESTOR FOR WASTE SOLVENT TANK W-14	P_ID_04.DWG		
FA-W15	AREA "C"	FLAME ARRESTOR FOR WASTE SOLVENT TANK W-15	P_ID_04.DWG		
FA-W16	AREA "C"	FLAME ARRESTOR FOR WASTE SOLVENT TANK W-16	P_ID_04.DWG		
FA-W17	AREA "C"	FLAME ARRESTOR FOR WASTE SOLVENT TANK W-17	P_ID_05.DWG		
FA-W18	AREA "C"	FLAME ARRESTOR FOR WASTE SOLVENT TANK W-18	P_ID_05.DWG		
FA-W19	AREA "C"	FLAME ARRESTOR FOR WASTE SOLVENT TANK W-19	P_ID_05.DWG		
FA-W20	AREA "C"	FLAME ARRESTOR FOR WASTE SOLVENT TANK W-20	P_ID_05.DWG		
FA-W21	AREA "C"	FLAME ARRESTOR FOR WASTE SOLVENT TANK W-21	P_ID_06.DWG		
FA-W22	AREA "C"	FLAME ARRESTOR FOR WASTE SOLVENT TANK W-22	P_ID_06.DWG		
FA-W10	AREA "E"	FLAME ARRESTOR FOR LUWA FEED TANK W-10	P_ID_07.DWG		
FA-W7	AREA "E"	FLAME ARRESTOR FOR LUWA FEED TANK W-7	P_ID_07.DWG		
FA-W8	AREA "E"	FLAME ARRESTOR FOR LUWA FEED TANK W-8	P_ID_07.DWG		
FA-W9	AREA "E"	FLAME ARRESTOR FOR LUWA FEED TANK W-9	P_ID_07.DWG		
FA-LU1-1	LUWA BUILDING	FLAME ARRESTOR FOR LUWA #1	P_ID_08.DWG		
FA-LU2-1	LUWA BUILDING	FLAME ARRESTOR FOR LUWA #2	P_ID_08.DWG		
FA-W11	AREA "D"	FLAME ARRESTOR FOR LUWA BOTTOMS TANK W-11	P_ID_09.DWG		
FA-W12	AREA "D"	FLAME ARRESTOR FOR LUWA BOTTOMS TANK W-12	P_ID_09.DWG		
FA-W4	AREA "C"	FLAME ARRESTOR FOR FUEL BLENDING - LEAN TANK W-4	P_ID_18.DWG		
FA-W5	AREA "D"	FLAME ARRESTOR FOR FUEL BLENDING - RICH TANK W-5	P_ID_18.DWG		
FA-W6	AREA "D"	FLAME ARRESTOR FOR FUEL BLENDING - RICH TANK W-6	P_ID_18.DWG		
FA-W23	AREA "A"	FLAME ARRESTOR FOR WASTE SOLVENT TANK W-23	P_ID_22.DWG		

THE ENVIRONMENTAL QUALITY COMPANY

EQ RESOURCE RECOVERY, INC
35345 VAN BORN
ROMULUS, MI 48174

HRC
Hubbell, Roth & Clark, Inc.
CONSULTING ENGINEERS
555 WINTER STREET
BLOOMFIELD HILLS, MICH.
P.O. BOX 824
48303-0824
PHONE: (248) 454-6496
FAX (Tel. Fleet): (248) 454-6312
FAX (Bus. Fleet): (248) 334-2443
WEB SITE: http:// www.hrc-eng.com

DATE	ADDITIONS AND/OR REVISIONS
07-17-06	MDEQ SUBMITTAL
05-24-06	OWNER'S REVIEW

DESIGNED KLC
DRAWN TWH
CHECKED
APPROVED

RE-ENGINEERING AND DESIGN OF EQ RESOURCE RECOVERY, INC. VAN BORN ROAD PLANT

CONSERVATION VENT, FLAME ARRESTOR AND EMERGENCY RELIEF VENT SCHEDULES

HRC JOB NO 20050683
SCALE NONE
DATE JULY 2006
SHEET NO P&ID-38

RADAR LEVEL INDICATING TRANSMITTERS

MANUFACTURER: VEGA
SERIES: VEGAPULS 66
MODEL NUMBER: PS66.CXHAM3HDNA

TAG NUMBER	DESCRIPTION	INSTRUMENT LOCATION	OUTPUT TERMINATED IN PANEL	RANGE OF INSTRUMENT (INCHES)	SPAN OF INSTRUMENT (INCHES)	DRAWING #	MOUNTING FLANGE
LIT - W1	LEVEL TRANSMITTER FOR DEDICATED WASTE TANK W-1	AREA "C"	IOP-C	0 - 1,377.6	0 - 415	P_ID_01.DWG	
LIT - W2	LEVEL TRANSMITTER FOR DEDICATED WASTE TANK W-2	AREA "D"	IOP-D	0 - 1,377.6	0 - 415	P_ID_01.DWG	
LIT - W3	LEVEL TRANSMITTER FOR DEDICATED WASTE TANK W-3	AREA "C"	IOP-C	0 - 1,377.6	0 - 245	P_ID_01.DWG	
LIT - W13	LEVEL TRANSMITTER FOR WASTE SOLVENT TANK W-13	AREA "C"	IOP-C	0 - 1,377.6	0 - 245	P_ID_04.DWG	
LIT - W14	LEVEL TRANSMITTER FOR WASTE SOLVENT TANK W-14	AREA "C"	IOP-C	0 - 1,377.6	0 - 245	P_ID_04.DWG	
LIT - W15	LEVEL TRANSMITTER FOR WASTE SOLVENT TANK W-15	AREA "C"	IOP-C	0 - 1,377.6	0 - 245	P_ID_04.DWG	
LIT - W16	LEVEL TRANSMITTER FOR WASTE SOLVENT TANK W-16	AREA "C"	IOP-C	0 - 1,377.6	0 - 245	P_ID_04.DWG	
LIT - W17	LEVEL TRANSMITTER FOR WASTE SOLVENT TANK W-17	AREA "C"	IOP-C	0 - 1,377.6	0 - 245	P_ID_05.DWG	
LIT - W18	LEVEL TRANSMITTER FOR WASTE SOLVENT TANK W-18	AREA "C"	IOP-C	0 - 1,377.6	0 - 245	P_ID_05.DWG	
LIT - W19	LEVEL TRANSMITTER FOR WASTE SOLVENT TANK W-19	AREA "C"	IOP-C	0 - 1,377.6	0 - 245	P_ID_05.DWG	
LIT - W20	LEVEL TRANSMITTER FOR WASTE SOLVENT TANK W-20	AREA "C"	IOP-C	0 - 1,377.6	0 - 245	P_ID_05.DWG	
LIT - W21	LEVEL TRANSMITTER FOR WASTE SOLVENT TANK W-21	AREA "C"	IOP-C	0 - 1,377.6	0 - 245	P_ID_06.DWG	
LIT - W22	LEVEL TRANSMITTER FOR WASTE SOLVENT TANK W-22	AREA "C"	IOP-C	0 - 1,377.6	0 - 245	P_ID_06.DWG	
LIT - W10	LEVEL TRANSMITTER FOR LUWA FEED TANK W-10	AREA "E"	IOP-E	0 - 1,377.6	0 - 245	P_ID_07.DWG	
LIT - W7	LEVEL TRANSMITTER FOR LUWA FEED TANK W-7	AREA "E"	IOP-E	0 - 1,377.6	0 - 245	P_ID_07.DWG	
LIT - W8	LEVEL TRANSMITTER FOR LUWA FEED TANK W-8	AREA "E"	IOP-E	0 - 1,377.6	0 - 245	P_ID_07.DWG	
LIT - W9	LEVEL TRANSMITTER FOR LUWA FEED TANK W-9	AREA "E"	IOP-E	0 - 1,377.6	0 - 245	P_ID_07.DWG	
LIT - W-11	LEVEL TRANSMITTER FOR LUWA BOTTOMS TANK W-11	AREA "D"	IOP-D	0 - 1,377.6	0 - 150	P_ID_09.DWG	
LIT - W-12	LEVEL TRANSMITTER FOR LUWA BOTTOMS TANK W-12	AREA "D"	IOP-D	0 - 1,377.6	0 - 150	P_ID_09.DWG	
LIT - W-4	LEVEL TRANSMITTER FOR FUEL BLENDING - CLEAN TANK W-4	AREA "C"	IOP-C	0 - 1,377.6	0 - 270	P_ID_18.DWG	
LIT - W-5	LEVEL TRANSMITTER FOR FUEL BLENDING - RICH TANK W-5	AREA "D"	IOP-D	0 - 1,377.6	0 - 270	P_ID_18.DWG	
LIT - W-6	LEVEL TRANSMITTER FOR FUEL BLENDING - RICH TANK W-6	AREA "D"	IOP-D	0 - 1,377.6	0 - 270	P_ID_18.DWG	
LIT - W-23	LEVEL TRANSMITTER FOR WASTE SOLVENT TANK W-23	AREA "A"	IOP-A	0 - 1,377.6	0 - 290	P_ID_22.DWG	

NOTES:
1. THE ALARM POINTS OF THE TRANSMITTERS SHALL DUPLICATE THOSE OF THE HIGH AND HIGH-HIGH LEVEL SWITCHES. THESE SHALL BE AT THE 90% (LSH) AND 95% (LSHH) OF THE VOLUME OF THE TANKS.
2. THE ALARM POINTS SHALL HAVE A DEAD-BAND OF TEN SECONDS (FIELD ADJUSTABLE - ADJUST TO SUIT THE FIELD CONDITIONS)

GAGE PRESSURE TRANSMITTERS

MANUFACTURER: DYNISCO
SERIES: SPX2281
MODEL NUMBER: 2281SGFCA4P13B

TAG NUMBER	DESCRIPTION	INSTRUMENT LOCATION	OUTPUT TERMINATED IN PANEL	RANGE OF INSTRUMENT (PSIG)	SPAN OF INSTRUMENT (PSIG)	DRAWING #	MOUNTING FLANGE
PT - P-DW-1	PRESSURE TRANSMITTER FOR PUMP P-DW-1 DOWNSTREAM PRESSURE	AREA "B"	IOP-B	0 - 250	0 - 100	P_ID_01.DWG	
PT - P-DW-2	PRESSURE TRANSMITTER FOR PUMP P-DW-2 DOWNSTREAM PRESSURE	PUMP & VALVE GALLERY	IOP-C	0 - 250	0 - 100	P_ID_01.DWG	
PT - P-DW-3	PRESSURE TRANSMITTER FOR PUMP P-DW-3 DOWNSTREAM PRESSURE	PUMP & VALVE GALLERY	IOP-D	0 - 250	0 - 100	P_ID_01.DWG	
PT - P-DW-4	PRESSURE TRANSMITTER FOR PUMP P-DW-4 DOWNSTREAM PRESSURE	PUMP & VALVE GALLERY	IOP-C	0 - 250	0 - 100	P_ID_01.DWG	
PT - P-FC-1	PRESSURE TRANSMITTER FOR PUMP P-FC-1 DOWNSTREAM PRESSURE	SOLVENT RECLAMATION	SRB-MCP	0 - 250	0 - 100	P_ID_02.DWG	
PT - P-WS-1	PRESSURE TRANSMITTER FOR PUMP P-WS-1 DOWNSTREAM PRESSURE	AREA "B"	IOP-B	0 - 250	0 - 100	P_ID_04.DWG	
PT - P-WS-2	PRESSURE TRANSMITTER FOR PUMP P-WS-2 DOWNSTREAM PRESSURE	PUMP & VALVE GALLERY	IOP-C	0 - 250	0 - 100	P_ID_05.DWG	
PT - P-LF-1	PRESSURE TRANSMITTER FOR PUMP P-LF-1 DOWNSTREAM PRESSURE	AREA "E"	IOP-E	0 - 250	0 - 100	P_ID_07.DWG	
PT - P-LF-2	PRESSURE TRANSMITTER FOR PUMP P-LF-2 DOWNSTREAM PRESSURE	AREA "E"	IOP-E	0 - 250	0 - 100	P_ID_07.DWG	
PT - P-LB-1	PRESSURE TRANSMITTER FOR PUMP P-LB-1 DOWNSTREAM PRESSURE	SOLVENT RECLAMATION	SRB-MCP	0 - 250	0 - 100	P_ID_08.DWG	
PT - P-LB-2	PRESSURE TRANSMITTER FOR PUMP P-LB-2 DOWNSTREAM PRESSURE	SOLVENT RECLAMATION	SRB-MCP	0 - 250	0 - 100	P_ID_08.DWG	
PT - P-HEG-1	PRESSURE TRANSMITTER FOR PUMP P-HEG-1 DOWNSTREAM PRESSURE	AREA "E"	IOP-E	0 - 250	0 - 100	P_ID_09.DWG	
PT - P-HS-C	PRESSURE TRANSMITTER FOR PUMP P-HS-C DOWNSTREAM PRESSURE	MOLECULAR SIEVE	ENG-MCP	0 - 250	0 - 100	P_ID_18.DWG	
PT - P-FU-LL	PRESSURE TRANSMITTER FOR PUMP P-FU-LL DOWNSTREAM PRESSURE	PUMP & VALVE GALLERY	IOP-B	0 - 250	0 - 150	P_ID_18.DWG	
PT - P-FU-LU	PRESSURE TRANSMITTER FOR PUMP P-FU-LU DOWNSTREAM PRESSURE	AREA "B"	IOP-B	0 - 250	0 - 100	P_ID_18.DWG	
PT - P-WS-4	PRESSURE TRANSMITTER FOR PUMP P-WS-4 DOWNSTREAM PRESSURE	AREA "A"	IOP-A	0 - 250	0 - 100	P_ID_22.DWG	

NOTES
1. THE ALARM POINTS OF THE TRANSMITTERS SHALL BE AT THE 90% (LSH) AND 95% (LSHH) OF THE MEASURED SPAN OF THE INSTRUMENT

THE ENVIRONMENTAL QUALITY COMPANY

EQ RESOURCE RECOVERY, INC
36345 VAN BORN
ROMULUS, MI. 48174

HRC
Hubbell, Roth & Clark, Inc.
CONSULTING ENGINEERS
555 HULET DRIVE P.O. BOX 824
BLOOMFIELD HILLS, MICH. 48303 - 0824
PHONE: (248) 454-6300
FAX (Tel. Phone): (248) 454-6312
FAX (Grp. Phone): (248) 258-2532
WEB SITE: http:// www.hrc-eng.com

DATE	ADDITIONS AND/OR REVISIONS
07-17-06	MDEQ SUBMITTAL
05-24-06	OWNER'S REVIEW

DESIGNED KLC
DRAWN TWH
CHECKED
APPROVED

RE-ENGINEERING AND DESIGN OF EQ RESOURCE RECOVERY, INC. VAN BORN ROAD PLANT

INSTRUMENT SCHEDULES

HRC JOB NO 20050663 | SCALE NONE
DATE JULY 2006 | SHEET NO P&ID-39

DUAL-POINT ULTRASONIC GAP SWITCHES

MANUFACTURER: THERMO ELECTRON
SERIES: SAPPHIRE DUAL-POINT SENSING SYSTEM
MODEL NUMBER: (SEE BELOW)

TAG NUMBER	DESCRIPTION	INSTRUMENT LOCATION	OUTPUT TERMINATED IN PANEL	DISTANCE FROM FLANGE FACE TO TOP OF GAP (INCHES)	MODEL NUMBER	DRAWING #	MOUNTING FLANGE
LSH - W1	HIGH LEVEL SWITCH FOR DEDICATED WASTE TANK W-1	AREA "C"	IOP-C	41.5	DFJOG1024004-15F-2GS	P_ID_01.DWG	
LSHH - W1	HIGH-HIGH LEVEL SWITCH FOR DEDICATED WASTE TANK W-1	AREA "C"	IOP-C	34	DFJOG1024004-15F-2GS	P_ID_01.DWG	
LSH - W2	HIGH LEVEL SWITCH FOR DEDICATED WASTE TANK W-2	AREA "D"	IOP-D	41.5	DFJOG1024004-15F-2GS	P_ID_01.DWG	
LSHH - W2	HIGH-HIGH LEVEL SWITCH FOR DEDICATED WASTE TANK W-2	AREA "D"	IOP-D	34	DFJOG1024004-15F-2GS	P_ID_01.DWG	
LSH - W3	HIGH LEVEL SWITCH FOR DEDICATED WASTE TANK W-3	AREA "C"	IOP-C	27	DFJOG1016002/7F-2GS	P_ID_01.DWG	
LSHH - W3	HIGH-HIGH LEVEL SWITCH FOR DEDICATED WASTE TANK W-3	AREA "C"	IOP-C	16	DFJOG1016002/7F-2GS	P_ID_01.DWG	
LSH - W13	HIGH LEVEL SWITCH FOR WASTE SOLVENT TANK W-13	AREA "C"	IOP-C	27	DFJOG1016002/7F-2GS	P_ID_04.DWG	
LSHH - W13	HIGH-HIGH LEVEL SWITCH FOR WASTE SOLVENT TANK W-13	AREA "C"	IOP-C	16	DFJOG1016002/7F-2GS	P_ID_04.DWG	
LSH - W14	HIGH LEVEL SWITCH FOR WASTE SOLVENT TANK W-14	AREA "C"	IOP-C	27	DFJOG1016002/7F-2GS	P_ID_04.DWG	
LSHH - W14	HIGH-HIGH LEVEL SWITCH FOR WASTE SOLVENT TANK W-14	AREA "C"	IOP-C	16	DFJOG1016002/7F-2GS	P_ID_04.DWG	
LSH - W15	HIGH LEVEL SWITCH FOR WASTE SOLVENT TANK W-15	AREA "C"	IOP-C	27	DFJOG1016002/7F-2GS	P_ID_04.DWG	
LSHH - W15	HIGH-HIGH LEVEL SWITCH FOR WASTE SOLVENT TANK W-15	AREA "C"	IOP-C	16	DFJOG1016002/7F-2GS	P_ID_04.DWG	
LSH - W16	HIGH LEVEL SWITCH FOR WASTE SOLVENT TANK W-16	AREA "C"	IOP-C	27	DFJOG1016002/7F-2GS	P_ID_04.DWG	
LSHH - W16	HIGH-HIGH LEVEL SWITCH FOR WASTE SOLVENT TANK W-16	AREA "C"	IOP-C	16	DFJOG1016002/7F-2GS	P_ID_04.DWG	
LSH - W17	HIGH LEVEL SWITCH FOR WASTE SOLVENT TANK W-17	AREA "C"	IOP-C	27	DFJOG1016002/7F-2GS	P_ID_05.DWG	
LSHH - W17	HIGH-HIGH LEVEL SWITCH FOR WASTE SOLVENT TANK W-17	AREA "C"	IOP-C	16	DFJOG1016002/7F-2GS	P_ID_05.DWG	
LSH - W18	HIGH LEVEL SWITCH FOR WASTE SOLVENT TANK W-18	AREA "C"	IOP-C	27	DFJOG1016002/7F-2GS	P_ID_05.DWG	
LSHH - W18	HIGH-HIGH LEVEL SWITCH FOR WASTE SOLVENT TANK W-18	AREA "C"	IOP-C	16	DFJOG1016002/7F-2GS	P_ID_05.DWG	
LSH - W19	HIGH LEVEL SWITCH FOR WASTE SOLVENT TANK W-19	AREA "C"	IOP-C	27	DFJOG1016002/7F-2GS	P_ID_05.DWG	
LSHH - W19	HIGH-HIGH LEVEL SWITCH FOR WASTE SOLVENT TANK W-19	AREA "C"	IOP-C	16	DFJOG1016002/7F-2GS	P_ID_05.DWG	
LSH - W20	HIGH LEVEL SWITCH FOR WASTE SOLVENT TANK W-20	AREA "C"	IOP-C	27	DFJOG1016002/7F-2GS	P_ID_05.DWG	
LSHH - W20	HIGH-HIGH LEVEL SWITCH FOR WASTE SOLVENT TANK W-20	AREA "C"	IOP-C	16	DFJOG1016002/7F-2GS	P_ID_05.DWG	
LSH - W21	HIGH LEVEL SWITCH FOR WASTE SOLVENT TANK W-21	AREA "C"	IOP-C	27	DFJOG1016002/7F-2GS	P_ID_06.DWG	
LSHH - W21	HIGH-HIGH LEVEL SWITCH FOR WASTE SOLVENT TANK W-21	AREA "C"	IOP-C	16	DFJOG1016002/7F-2GS	P_ID_06.DWG	
LSH - W22	HIGH LEVEL SWITCH FOR WASTE SOLVENT TANK W-22	AREA "C"	IOP-C	27	DFJOG1016002/7F-2GS	P_ID_06.DWG	
LSHH - W22	HIGH-HIGH LEVEL SWITCH FOR WASTE SOLVENT TANK W-22	AREA "C"	IOP-C	16	DFJOG1016002/7F-2GS	P_ID_06.DWG	
LSH - W10	HIGH LEVEL SWITCH FOR LUWA FEED TANK W-10	AREA "E"	IOP-E	28	DFJOG1016002/8F-2GS	P_ID_07.DWG	
LSHH - W10	HIGH-HIGH LEVEL SWITCH FOR LUWA FEED TANK W-10	AREA "E"	IOP-E	16	DFJOG1016002/8F-2GS	P_ID_07.DWG	
LSH - W7	HIGH LEVEL SWITCH FOR LUWA FEED TANK W-7	AREA "E"	IOP-E	28	DFJOG1016002/8F-2GS	P_ID_07.DWG	
LSHH - W7	HIGH-HIGH LEVEL SWITCH FOR LUWA FEED TANK W-7	AREA "E"	IOP-E	16	DFJOG1016002/8F-2GS	P_ID_07.DWG	
LSH - W8	HIGH LEVEL SWITCH FOR LUWA FEED TANK W-8	AREA "E"	IOP-E	28	DFJOG1016002/8F-2GS	P_ID_07.DWG	
LSHH - W8	HIGH-HIGH LEVEL SWITCH FOR LUWA FEED TANK W-8	AREA "E"	IOP-E	16	DFJOG1016002/8F-2GS	P_ID_07.DWG	
LSH - W9	HIGH LEVEL SWITCH FOR LUWA FEED TANK W-9	AREA "E"	IOP-E	28	DFJOG1016002/8F-2GS	P_ID_07.DWG	
LSHH - W9	HIGH-HIGH LEVEL SWITCH FOR LUWA FEED TANK W-9	AREA "E"	IOP-E	16	DFJOG1016002/8F-2GS	P_ID_07.DWG	
LSH - W-11	HIGH LEVEL SWITCH FOR LUWA BOTTOMS TANK W-11	AREA "D"	IOP-D	25.5	DFJOG1016502/8F-2GS	P_ID_09.DWG	
LSHH - W-11	HIGH-HIGH LEVEL SWITCH FOR LUWA BOTTOMS TANK W-11	AREA "D"	IOP-D	16.5	DFJOG1016502/8F-2GS	P_ID_09.DWG	
LSH - W-12	HIGH LEVEL SWITCH FOR LUWA BOTTOMS TANK W-12	AREA "D"	IOP-D	25.5	DFJOG1016502/8F-2GS	P_ID_09.DWG	
LSHH - W-12	HIGH-HIGH LEVEL SWITCH FOR LUWA BOTTOMS TANK W-12	AREA "D"	IOP-D	16.5	DFJOG1016502/8F-2GS	P_ID_09.DWG	
LSH - W-4	HIGH LEVEL SWITCH FOR FUEL BLENDING - LEAN TANK W-4	AREA "C"	IOP-C	22.5	DFJOG1017502/0F-2GS	P_ID_18.DWG	
LSHH - W-4	HIGH-HIGH LEVEL SWITCH FOR FUEL BLENDING - LEAN TANK W-4	AREA "C"	IOP-C	17.5	DFJOG1017502/0F-2GS	P_ID_18.DWG	
LSH - W-5	HIGH LEVEL SWITCH FOR FUEL BLENDING - RICH TANK W-5	AREA "D"	IOP-D	22.5	DFJOG1017502/0F-2GS	P_ID_18.DWG	
LSHH - W-5	HIGH-HIGH LEVEL SWITCH FOR FUEL BLENDING - RICH TANK W-5	AREA "D"	IOP-D	17.5	DFJOG1017502/0F-2GS	P_ID_18.DWG	
LSH - W-6	HIGH LEVEL SWITCH FOR FUEL BLENDING - RICH TANK W-6	AREA "D"	IOP-D	22.5	DFJOG1017502/0F-2GS	P_ID_18.DWG	
LSHH - W-6	HIGH-HIGH LEVEL SWITCH FOR FUEL BLENDING - RICH TANK W-6	AREA "D"	IOP-D	17.5	DFJOG1017502/0F-2GS	P_ID_18.DWG	
LSH - W-23	HIGH LEVEL SWITCH FOR DEDICATED WASTE TANK W-23	AREA "A"	IOP-A	28	DFJOG1016002/8F-2GS	P_ID_22.DWG	
LSHH - W-23	HIGH-HIGH LEVEL SWITCH FOR WASTE SOLVENT TANK W-23	AREA "A"	IOP-A	16	DFJOG1016002/8F-2GS	P_ID_22.DWG	

NOTES: * 1 EACH LEVEL SWITCH (HIGH AND HIGH-HIGH) SHALL HAVE A DEAD-BAND OF TEN SECONDS (FIELD ADJUSTABLE - ADJUST TO SUIT THE FIELD CONDITIONS)

THE ENVIRONMENTAL QUALITY COMPANY

EQ RESOURCE RECOVERY, INC
35345 VAN BORN
ROMULUS, MI. 48174

HRC
Hubbell, Roth & Clark, Inc.
CONSULTING ENGINEERS
555 HULET DRIVE
BLOOMFIELD HILLS, MICH.
P.O. BOX 824
48303 - 0824
PHONE: (248) 454-6300
FAX (Tel. Fleet): (248) 454-6312
FAX (Ind. Fleet): (248) 338-2082
WEB SITE: http:// www.hrc-engr.com

07-17-06	MDEQ SUBMITTAL
05-24-06	OWNER'S REVIEW
DATE	ADDITIONS AND/OR REVISIONS
DESIGNED	KLC
DRAWN	TWH
CHECKED	
APPROVED	

RE-ENGINEERING
AND DESIGN OF
EQ RESOURCE
RECOVERY, INC.
VAN BORN ROAD PLANT

INSTRUMENT
SCHEDULES

PROJECT NO 20050833	SCALE NONE
DATE JULY 2006	SHEET NO P&ID-40

MANUAL VALVE SCHEDULE									
VALVE TAG NO.	SERVICE	FLUID	MIN. VALVE SIZE (IN)	ACTUATOR TYPE	LOCKING HANDLE	DRAWING #	INLET FLANGE	OUTLET FLANGE
DT-DW-01	DEDICATED WASTE TANKER UNLOAD STATION DRAIN/PURGE VALVE	DECANT WASTE	1/2"	MANUAL	YES	P_ID_01.DWG		
DT-DW-02	DRAIN/PURGE VALVE UPSTREAM OF DEDICATED WASTE PUMP P-DW1	DECANT WASTE	1/2"	MANUAL	YES	P_ID_01.DWG		
DT-DW-03	DRAIN/PURGE VALVE DOWNSTREAM OF DEDICATED WASTE PUMP P-DW1	DECANT WASTE	1/2"	MANUAL	YES	P_ID_01.DWG		
DT-DW-04	DRAIN/PURGE VALVE UPSTREAM OF DEDICATED WASTE PUMP P-DW2	DECANT WASTE	1/2"	MANUAL	YES	P_ID_01.DWG		
DT-DW-05	DRAIN/PURGE VALVE DOWNSTREAM OF DEDICATED WASTE PUMP P-DW2	DECANT WASTE	1/2"	MANUAL	YES	P_ID_01.DWG		
DT-DW-06	DRAIN/PURGE VALVE UPSTREAM OF DEDICATED WASTE PUMP P-DW3	DECANT WASTE	1/2"	MANUAL	YES	P_ID_01.DWG		
DT-DW-07	DRAIN/PURGE VALVE DOWNSTREAM OF DEDICATED WASTE PUMP P-DW3	DECANT WASTE	1/2"	MANUAL	YES	P_ID_01.DWG		
DT-DW-08	DRAIN/PURGE VALVE UPSTREAM OF DEDICATED WASTE PUMP P-DW4	DECANT WASTE	1/2"	MANUAL	YES	P_ID_01.DWG		
DT-DW-09	DRAIN/PURGE VALVE DOWNSTREAM OF DEDICATED WASTE PUMP P-DW4	DECANT WASTE	1/2"	MANUAL	YES	P_ID_01.DWG		
DW-11	DEDICATED WASTE TANKER UNLOAD STATION ISOLATION VALVE	DECANT WASTE	3"	MANUAL	YES	P_ID_01.DWG		
DW-12	DEDICATED WASTE TANK W-1 FILL VALVE	DECANT WASTE	3"	MANUAL	NO	P_ID_01.DWG		
DW-13	DEDICATED WASTE TANK W-1 TRANSFER ISOLATION VALVE TO DEDICATED WASTE TANK W-2	DECANT WASTE	3"	MANUAL	NO	P_ID_01.DWG		
DW-14	DEDICATED WASTE TANK W-1 TRANSFER ISOLATION VALVE TO FRAC COLUMN #2	DECANT WASTE	3"	MANUAL	NO	P_ID_01.DWG		
DW-16	DEDICATED WASTE TANK W-2 FILL VALVE	DECANT WASTE	3"	MANUAL	NO	P_ID_01.DWG		
DW-17	DEDICATED WASTE TANK W-2 TRANSFER ISOLATION VALVE TO DEDICATED WASTE TANK W-3	DECANT WASTE	3"	MANUAL	NO	P_ID_01.DWG		
DW-19	DEDICATED WASTE TANK W-2 TRANSFER ISOLATION VALVE TO FRAC COLUMN #2	DECANT WASTE	2"	MANUAL	NO	P_ID_01.DWG		
DW-20	DEDICATED WASTE TANK W-3 FILL VALVE	DECANT WASTE	3"	MANUAL	NO	P_ID_01.DWG		
DW-W1-1	DEDICATED WASTE TANK W-1 FALL-DOWN ISOLATION VALVE	DECANT WASTE	3"	MANUAL	NO	P_ID_01.DWG		
DW-W1-2	FIRE-LINK VALVE FOR DEDICATED WASTE TANK W-1	DECANT WASTE	3"	FIRE-LINK	FIRE-LINK	P_ID_01.DWG		
DW-W1-3	FIRE-LINK VALVE FOR DEDICATED WASTE TANK W-1 DISCHARGE WITHOUT DECANT	DECANT WASTE	3"	FIRE-LINK	FIRE-LINK	P_ID_01.DWG		
DW-W1-4	DEDICATED WASTE TANK W-1 TRANSFER ISOLATION VALVE WITHOUT DECANT	DECANT WASTE	3"	MANUAL	NO	P_ID_01.DWG		
DW-W2-1	DEDICATED WASTE TANK W-2 FALL-DOWN ISOLATION VALVE	DECANT WASTE	3"	MANUAL	NO	P_ID_01.DWG		
DW-W2-2	FIRE-LINK VALVE FOR DEDICATED WASTE TANK W-2	DECANT WASTE	3"	FIRE-LINK	FIRE-LINK	P_ID_01.DWG		
DW-W2-3	FIRE-LINK VALVE FOR DEDICATED WASTE TANK W-2 DISCHARGE WITHOUT DECANT	DECANT WASTE	3"	FIRE-LINK	FIRE-LINK	P_ID_01.DWG		
DW-W2-4	DEDICATED WASTE TANK W-2 TRANSFER ISOLATION VALVE WITHOUT DECANT	DECANT WASTE	3"	MANUAL	NO	P_ID_01.DWG		
DW-W3-1	DEDICATED WASTE TANK W-3 FALL-DOWN ISOLATION VALVE	DECANT WASTE	3"	MANUAL	NO	P_ID_01.DWG		
DW-W3-2	FIRE-LINK VALVE FOR DEDICATED WASTE TANK W-3	DECANT WASTE	3"	FIRE-LINK	FIRE-LINK	P_ID_01.DWG		
DW-W3-3	FIRE-LINK VALVE FOR DEDICATED WASTE TANK W-3 DISCHARGE WITHOUT DECANT	DECANT WASTE	3"	FIRE-LINK	FIRE-LINK	P_ID_01.DWG		
DW-W3-4	DEDICATED WASTE TANK W-3 TRANSFER ISOLATION VALVE WITHOUT DECANT	DECANT WASTE	3"	MANUAL	NO	P_ID_01.DWG		
FC-DW-01	DEDICATED WASTE FROM FRAC COLUMN #1 ISOLATION VALVE TO FILL DEDICATED TANKS W-1, W-2 AND W-3	DECANT WASTE	2"	MANUAL	NO	P_ID_01.DWG		
P-DW1-IN	DEDICATED WASTE PUMP P-DW1 UPSTREAM ISOLATION VALVE	DECANT WASTE	3"	MANUAL	YES	P_ID_01.DWG		
P-DW1-OUT	DEDICATED WASTE PUMP P-DW1 DOWNSTREAM ISOLATION VALVE	DECANT WASTE	3"	MANUAL	YES	P_ID_01.DWG		
[illegible]	[illegible]	[illegible]	[illegible]	[illegible]	[illegible]	[illegible]		

MANUAL VALVE SCHEDULE								
VALVE TAG NO.	SERVICE	FLUID	MIN. VALVE SIZE (IN)	ACTUATOR TYPE	LOCKING HANDLE	DRAWING #	INLET FLANGE	OUTLET FLANGE
WS-17	DRUM WASTE RECLAIM TANK W-10 SUPPLY ISOLATION VALVE 1 FOR LUWA FEED TANKS W-7, W-8, W-9 AND W-10	WASTE SOLVENT	3"	MANUAL	YES	P_ID_07.DWG		
LF-02	LUWA FEED TANKS W-7 AND W-8 SUPPLY TO LUWA LU-1 ISOLATION VALVE	LUWA FEED	3"	FIRE-LINK	NO	P_ID_08.DWG		
LF-03	LUWA LU-1 SUPPLY UPSTREAM OF FLOW ELEMENT FE-101 ISOLATION VALVE	LUWA FEED	3"	FIRE-LINK	YES	P_ID_08.DWG		
LF-04	LUWA FEED TANKS W-7 AND W-8 SUPPLY TO LUWA LU-2 ISOLATION VALVE	LUWA FEED	3"	FIRE-LINK	NO	P_ID_08.DWG		
LF-06	LUWA FEED TANKS W-9 AND W-10 SUPPLY TO LUWA LU-1 ISOLATION VALVE	LUWA FEED	3"	FIRE-LINK	NO	P_ID_08.DWG		
LF-07	LUWA FEED TANKS W-9 AND W-10 SUPPLY TO LUWA LU-2 ISOLATION VALVE	LUWA FEED	3"	FIRE-LINK	NO	P_ID_08.DWG		
LF-08	LUWA LU-2 SUPPLY UPSTREAM OF FLOW ELEMENT FE-201 ISOLATION VALVE	LUWA FEED	3"	FIRE-LINK	YES	P_ID_08.DWG		
RES-01	LUWA BOTTOMS TRANSFER PUMP P-LB1 DOWNSTREAM ISOLATION VALVE	RESIN	3"	FIRE-LINK	YES	P_ID_08.DWG		
RES-02	LUWA LU-1 BOTTOMS TRANSFER ISOLATION VALVE TO LUWA FEED TANKS W-7 THRU W-10	RESIN	3"	FIRE-LINK	NO	P_ID_08.DWG		
RES-04	LUWA LU-1 BOTTOMS TRANSFER ISOLATION VALVE TO LUWA BOTTOMS TANK W-11	RESIN	3"	FIRE-LINK	NO	P_ID_08.DWG		
RES-05	LUWA LU-1 BOTTOMS TRANSFER ISOLATION VALVE TO LUWA BOTTOMS TANK W-12	RESIN	3"	FIRE-LINK	NO	P_ID_08.DWG		
RES-07	LUWA BOTTOMS TRANSFER PUMP P-LB2 DOWNSTREAM ISOLATION VALVE	RESIN	3"	FIRE-LINK	YES	P_ID_08.DWG		
RES-08	LUWA LU-2 BOTTOMS TRANSFER ISOLATION VALVE TO LUWA FEED TANKS W-7 THRU W-10	RESIN	3"	FIRE-LINK	NO	P_ID_08.DWG		
RES-10	LUWA LU-2 BOTTOMS TRANSFER ISOLATION VALVE TO LUWA BOTTOMS TANK W-11	RESIN	3"	FIRE-LINK	NO	P_ID_08.DWG		
RES-11	LUWA LU-2 BOTTOMS TRANSFER ISOLATION VALVE TO LUWA BOTTOMS TANK W-12	RESIN	3"	FIRE-LINK	NO	P_ID_08.DWG		
DP-RES-01	DRAIN/PURGE VALVE UPSTREAM OF LUWA BOTTOMS (RESIN) PUMP P-RES-1	RESIN	1/2"	MANUAL	YES	P_ID_08.DWG		
DP-RES-02	DRAIN/PURGE VALVE DOWNSTREAM OF LUWA BOTTOMS (RESIN) PUMP P-RES-1	RESIN	1/2"	MANUAL	YES	P_ID_08.DWG		
DP-RES-03	LUWA BOTTOMS (RESIN) DRAIN/PURGE VALVE AT LUWA PRODUCT TANKER LOAD STATION RE-LS-1	RESIN	1/2"	MANUAL	YES	P_ID_08.DWG		
P-RES-1-IN	LUWA RESIN TRANSFER PUMP P-RES-1 UPSTREAM ISOLATION VALVE	RESIN	3"	MANUAL	YES	P_ID_08.DWG		
P-RES-1-OUT	LUWA RESIN TRANSFER PUMP P-RES-1 DOWNSTREAM ISOLATION VALVE	RESIN	3"	MANUAL	YES	P_ID_08.DWG		
PT-P-RES-1	LUWA BOTTOMS RESIN PUMP P-RES-1 DISCHARGE PRESSURE TRANSMITTER PT-P-RES-1 ISOLATION VALVE	RESIN	1/2"	MANUAL	NO	P_ID_08.DWG		
RES-15	LUWA BOTTOMS ISOLATION VALVE FROM P-LB1 FOR LUWA BOTTOMS TANKS W-11 AND W-12	RESIN	3"	MANUAL	YES	P_ID_08.DWG		
RES-17	LUWA BOTTOMS ISOLATION VALVE FROM P-LB2 FOR LUWA BOTTOMS TANKS W-11 AND W-12	RESIN	3"	MANUAL	YES	P_ID_08.DWG		
RES-13	LUWA RESIN ISOLATION VALVE FOR TANKS W-11 AND W-12 TO P-RES-1	RESIN	3"	MANUAL	YES	P_ID_08.DWG		
RES-14	LUWA BOTTOMS (RESIN) TANKER LOAD STATION ISOLATION VALVE - UPSTREAM OF TANKER LOAD STATION	RESIN	3"	FIRE-LINK	YES	P_ID_08.DWG		
RES-16	LUWA RESIN ISOLATION VALVE FROM LUWA BOTTOMS TANKS W-11 AND W-12 TO FUEL BLENDING	RESIN	3"	FIRE-LINK	NO	P_ID_08.DWG		
RES-FLTR-IN	LUWA BOTTOMS (RESIN) TANKER LOAD STATION TRANSFER VALVE - UPSTREAM ISOLATION VALVE FOR FINAL FILTERS	RESIN	3"	FIRE-LINK	YES	P_ID_08.DWG		
RES-FLTR-OUT	LUWA BOTTOMS (RESIN) TANKER LOAD STATION TRANSFER VALVE - DOWNSTREAM ISOLATION VALVE OF FINAL FILTERS	RESIN	3"	FIRE-LINK	YES	P_ID_08.DWG		
RES-W11-1	VALVE FOR LUWA BOTTOMS TANK W-11	RESIN	3"	FIRE-LINK	FIRE-LINK	P_ID_08.DWG		
RES-W11-2	FIRE-LINK VALVE FOR LUWA BOTTOMS TANK W-11	RESIN	3"	FIRE-LINK	FIRE-LINK	P_ID_08.DWG		
RES-W11-3	LUWA BOTTOMS RECYCLE VALVE FOR TANK W-11	RESIN	3"	FIRE-LINK	YES	P_ID_08.DWG		
RES-W12-1	VALVE FOR LUWA BOTTOMS TANK W-12	RESIN	3"	FIRE-LINK	FIRE-LINK	P_ID_08.DWG		
[illegible]	[illegible]	[illegible]	[illegible]	[illegible]	[illegible]	[illegible]		

THE ENVIRONMENTAL QUALITY COMPANY

EQ RESOURCE RECOVERY, INC
36345 VAN BORN
ROMULUS, MI. 48174

HRC

Hubbell, Roth & Clark, Inc.
CONSULTING ENGINEERS

555 HULET DRIVE
BLOOMFIELD HILLS, MICH.
P.O. BOX 824
48303-0824
PHONE: (248) 454-6300
FAX (1st. Floor): (248) 454-6312
FAX (2nd. Floor): (248) 338-2592
WEB SITE: http:// www.hrc-engr.com

07-17-06	MDEQ SUBMITTAL
05-24-06	OWNER'S REVIEW
DATE	ADDITIONS AND/OR REVISIONS
DESIGNED	KLC
DRAWN	TWH
CHECKED	
APPROVED	

RE-ENGINEERING AND DESIGN OF EQ RESOURCE RECOVERY, INC. VAN BORN ROAD PLANT

VALVE SCHEDULES

HRC JOB NO 20050683	SCALE NONE
DATE JULY 2006	SHEET NO P&ID-41

F:\2005\0683\... - 2006-07-12 - MDEQ SUBMITTAL P&ID-41.DWG, 7/12/2006 3:20:55 PM

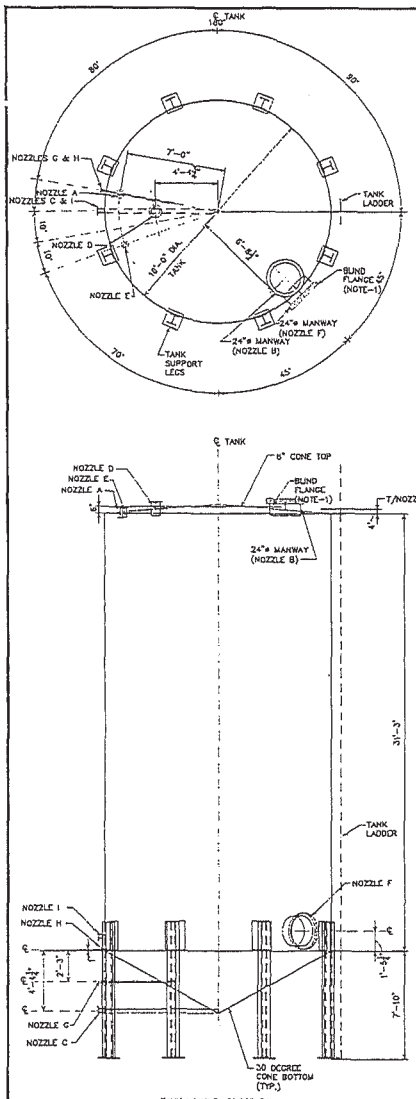

TANK VOLUME: 50,000 GAL
FABRICATE PER UL 142

TANKS W1 & W2

SCALE: 1/4" = 1'-0"

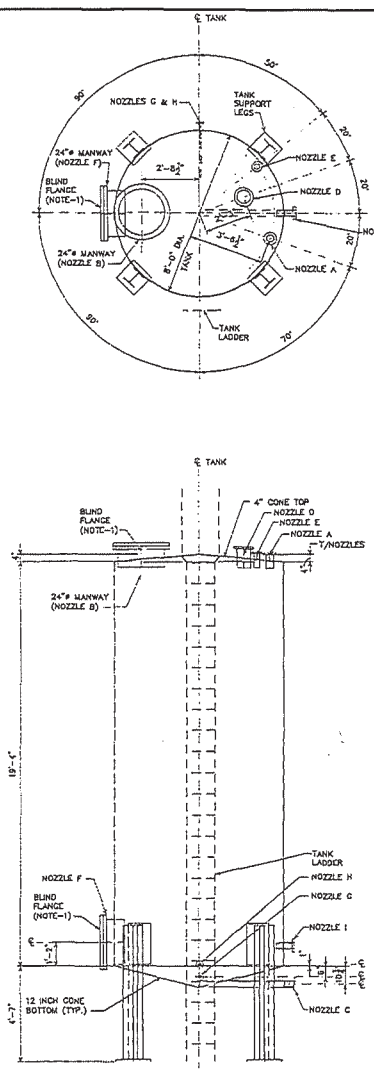

TANK VOLUME: 7,500 GAL
FABRICATE PER UL 142

TANK W3

SCALE: 3/8" = 1'-0"

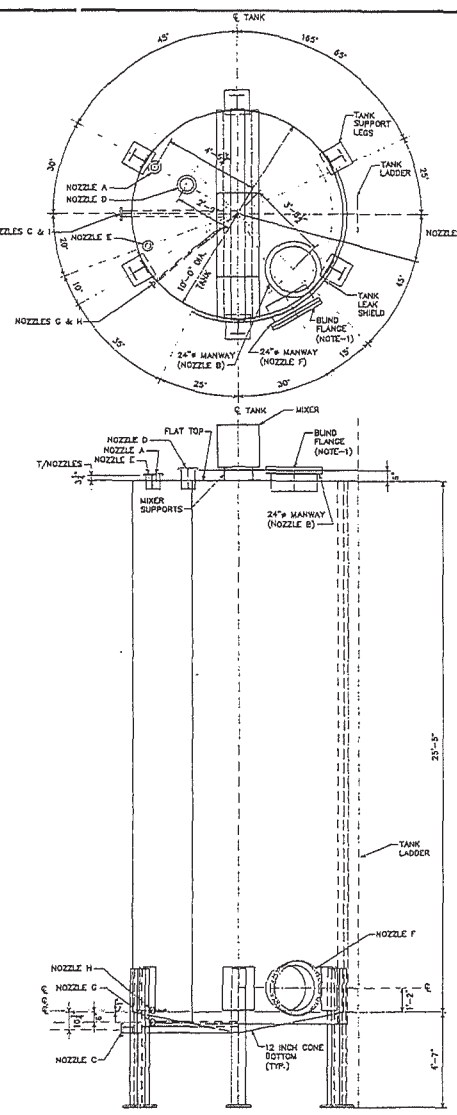

TANK VOLUME: 15,130 GAL
FABRICATE PER API 620

TANK W4

SCALE: 3/8" = 1'-0"

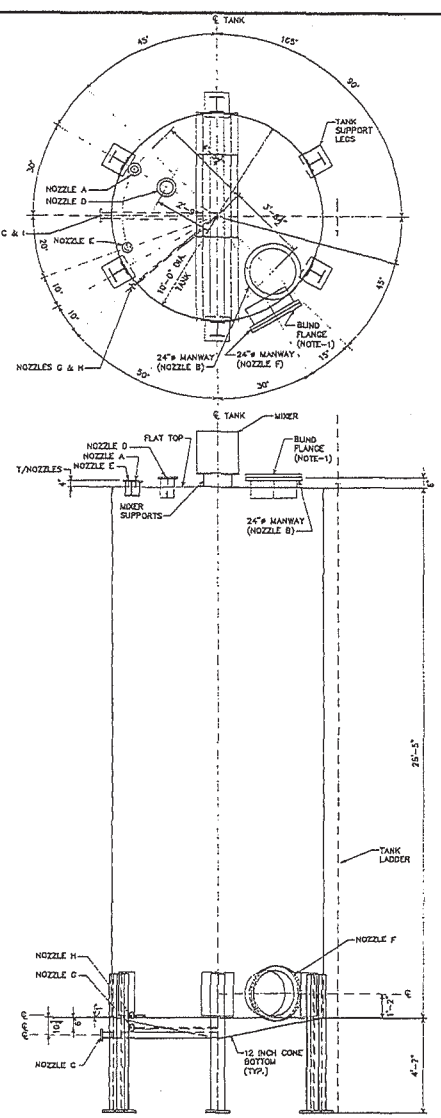

TANK VOLUME: 15,130 GAL
FABRICATE PER API 620

TANK W5

SCALE: 3/8" = 1'-0"

TANK NOTES:

1. GASKETS FOR BLIND FLANGED OPENINGS SHALL BE GRAFOIL. BLIND FLANGES SUPPLIED SHALL BE 150LB RATED, AND OF MATERIAL TO MATCH THE TANK. ALL FASTENER HARDWARE (BOLTS, NUTS, AND WASHERS) SHALL BE STAINLESS STEEL.
2. ALL TANKS FABRICATED FROM CARBON STEEL.
3. TANK INTERIOR AND FLANGE FACES SHALL BE BARE STEEL.
4. TANK ACCESS LADDERS SHALL PROVIDE ANTI-FALL PROTECTION.
5. TANK LEGS SHALL BE FIREPROOFED FOR 2 HOUR RATING.
6. PROVIDE TANK LEAK SHIELD COVERING THE STRAIGHT SIDE. PROVIDE SHROUD TO COVER MANWAYS THAT PENETRATE THE LEAK SHIELD.

NOZZLE LEGEND

MARK	DESCRIPTION:	MARK	DESCRIPTION:	MARK	DESCRIPTION:
A	3" FLANGE FOR CONSERVATION/VENT RELIEF	E	2" FLANGE FOR HIGH/HIGH-HIGH ALARM SWITCH	I	3" FLANGE FOR UPPER DRAIN
B	24" FLANGED MANWAY WITH BLIND FLANGE	F	24" FLANGED MANWAY WITH BLIND FLANGE		
C	3" FLANGE FOR FILL/DRAIN	G	1" FLANGE FOR LOWER DECANT		
D	6" FLANGE FOR RADAR LEVEL DEVICE	H	1" FLANGE FOR UPPER DECANT		

THE ENVIRONMENTAL QUALITY COMPANY

EQ RESOURCE RECOVERY, INC
36345 VAN BORN
ROMULUS, MI. 48174

HRC
Hubbell, Roth & Clark, Inc.
CONSULTING ENGINEERS
560 WILLET DRIVE
BLOOMFIELD HILLS, MICH.
P.O. BOX 824
48303-0824
PHONE: (248) 454-6496
FAX (Tel. Phone): (248) 454-6312
FAX (Data Phone): (248) 338-2287
WEB SITE: http://www.hrc-eng.com

07-17-05	MDEQ SUBMITTAL
05-24-05	OWNER'S REVIEW
DATE	ADDITIONS AND/OR REVISIONS
DESIGNED	E.C.
DRAWN	T.W.R.
CHECKED	
APPROVED	

RE-ENGINEERING AND DESIGN OF EQ RESOURCE RECOVERY, INC. VAN BORN ROAD PLANT

TANK FARM
TANK DETAILS

HRC JOB NO	20050683
SCALE	3/8" = 1'-0"
DATE	JULY 2005
SHEET NO	TD-01

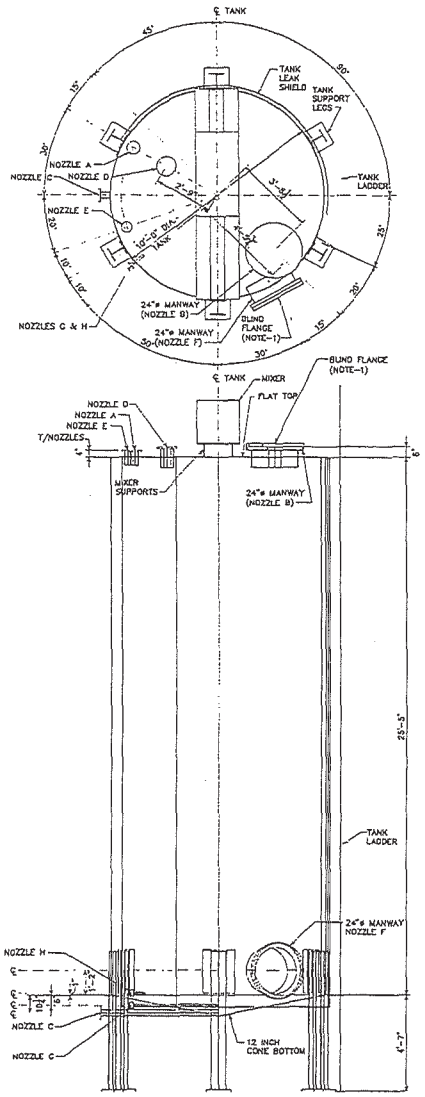

TANK VOLUME: 15,130 GAL.
FABRICATE PER API 620

TANK W6

SCALE: 3/8" = 1'-0"

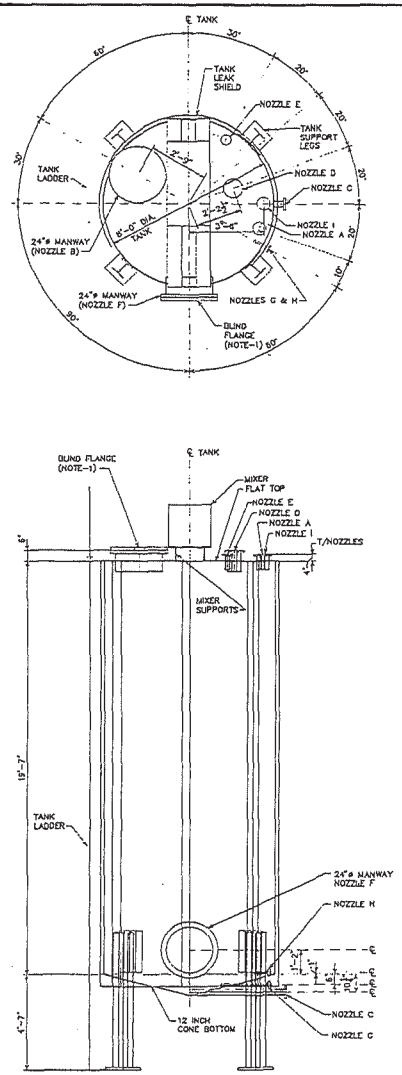

TANK VOLUME: 7,500 GAL.
FABRICATE PER API 620

TANK W7

SCALE: 3/8" = 1'-0"

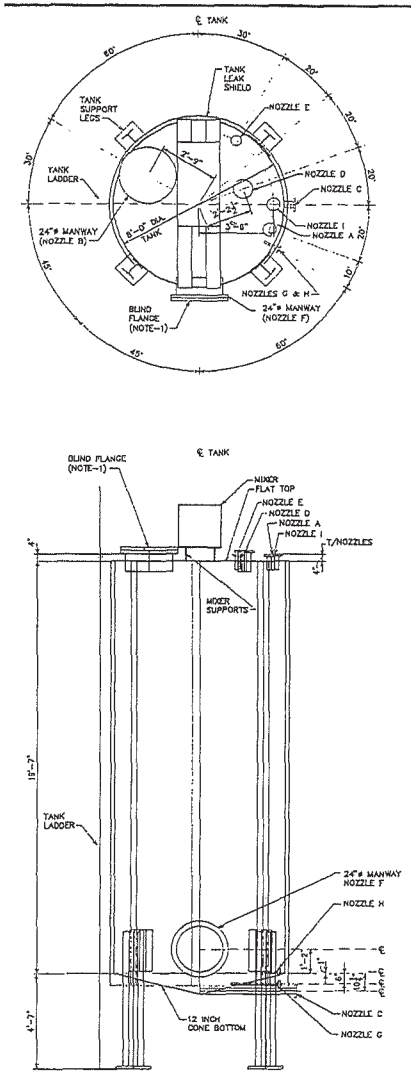

TANK VOLUME: 7,500 GAL.
FABRICATE PER API 620

TANK W8

SCALE: 3/8" = 1'-0"

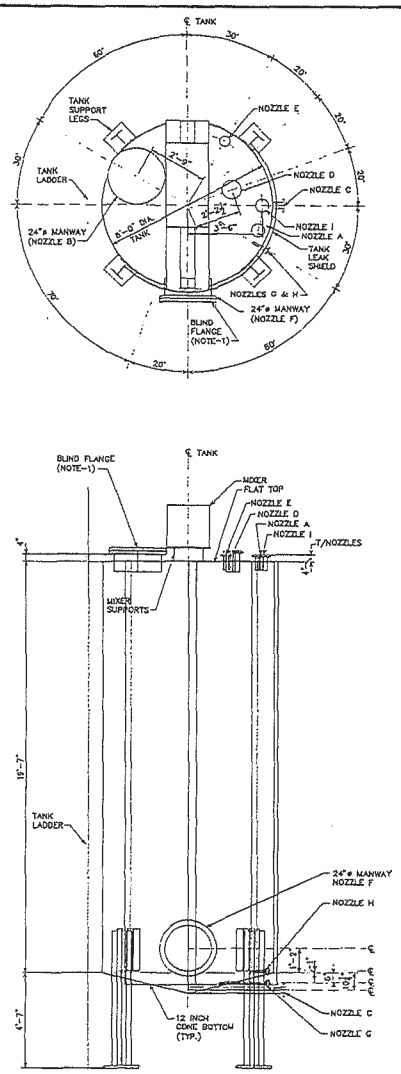

TANK VOLUME: 7,500 GAL.
FABRICATE PER API 620

TANKS W9 & W10

SCALE: 3/8" = 1'-0"

TANK NOTES:

1. GASKETS FOR BLIND FLANGED OPENINGS SHALL BE GRAFOIL. BLIND FLANGES SUPPLIED SHALL BE 150LB RATED, AND OF MATERIAL TO MATCH THE TANK. ALL FASTENER HARDWARE (BOLTS, NUTS, AND WASHERS) SHALL BE STAINLESS STEEL.
2. ALL TANKS FABRICATED FROM CARBON STEEL.
3. TANK INTERIOR AND FLANGE FACES SHALL BE BARE STEEL.
4. TANK ACCESS LADDERS SHALL PROVIDE ANTI-FALL PROTECTION.
5. TANK LEGS SHALL BE FIREPROOFED FOR 2 HOUR RATING.
6. PROVIDE TANK LEAK SHIELD COVERING THE STRAIGHT SIDE. PROVIDE SHROUD TO COVER MANWAYS THAT PENETRATE THE LEAK SHIELD.

NOZZLE LEGEND

MARK	DESCRIPTION:	MARK	DESCRIPTION:	MARK	DESCRIPTION:
A	3" FLANGE FOR CONSERVATION/VENT RELIEF	E	2" FLANGE FOR HIGH/HIGH-HIGH ALARM SWITCH	I	3" FLANGE FOR UPPER DRAIN
B	24" FLANGED MANWAY WITH BLIND FLANGE	F	24" FLANGED MANWAY WITH BLIND FLANGE		
C	3" FLANGE FOR FILL/DRAIN	G	1" FLANGE FOR LOWER DECANT		
D	6" FLANGE FOR RADAR LEVEL DEVICE	H	1" FLANGE FOR UPPER DECANT		

THE ENVIRONMENTAL QUALITY COMPANY

EQ RESOURCE RECOVERY, INC
36345 VAN BORN
ROMULUS, MI. 48174

HRC
Hubbell, Roth & Clark, Inc.
CONSULTING ENGINEERS
555 WILET DRIVE
BLOOMFIELD HILLS, MICH.
P.O. BOX 824
48303-0824
PHONE: (248) 454-6300
FAX (Tel. Fleet): (248) 454-6312
FAX (Dial. Fleet): (248) 328-2642
WEB SITE: http:// www.hrc-eng.com

DATE	ADDITIONS AND/OR REVISIONS
07-17-06	MDEQ SUBMITTAL
05-24-06	OWNER'S REVIEW

DESIGNED E.C.
DRAWN T.W.R.
CHECKED
APPROVED

RE-ENGINEERING AND DESIGN OF EQ RESOURCE RECOVERY, INC. VAN BORN ROAD PLANT

TANK FARM
TANK DETAILS

HRC JOB NO 20050663
SCALE AS NOTED
DATE JULY 2006
SHEET NO TD-02

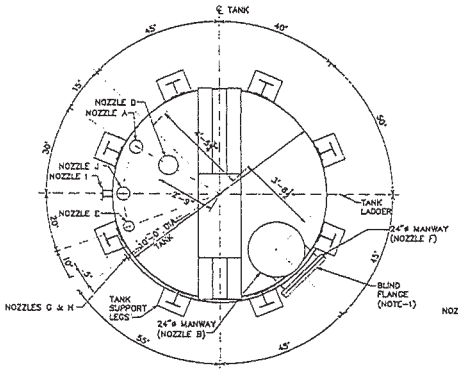

TANK VOLUME: 12,000 GAL.
FABRICATE PER API 620

TANK W11

SCALE: 3/8" = 1'-0"

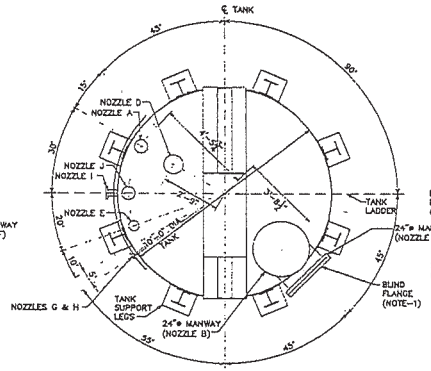

TANK VOLUME: 12,000 GAL.
FABRICATE PER API 620

TANK W12

SCALE: 3/8" = 1'-0"

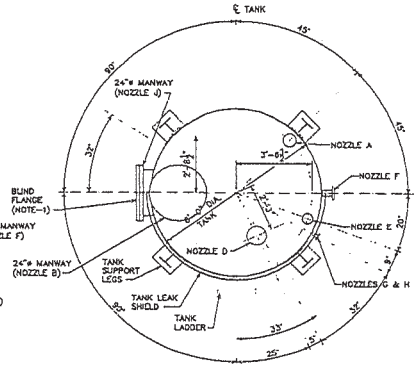

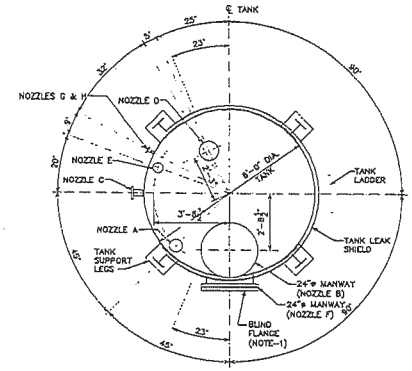

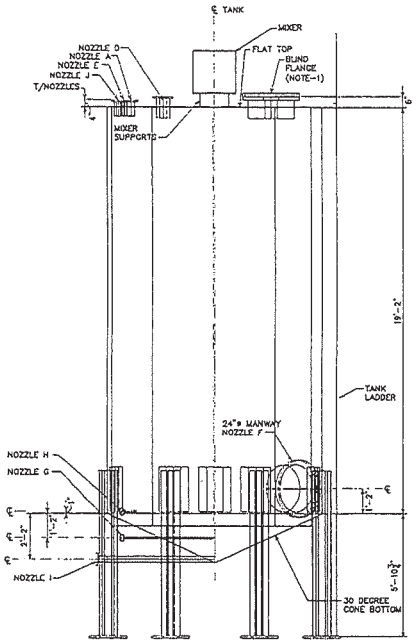

TANK VOLUME: 12,000 GAL.
FABRICATE PER API 620

TANK W11

SCALE: 3/8" = 1'-0"

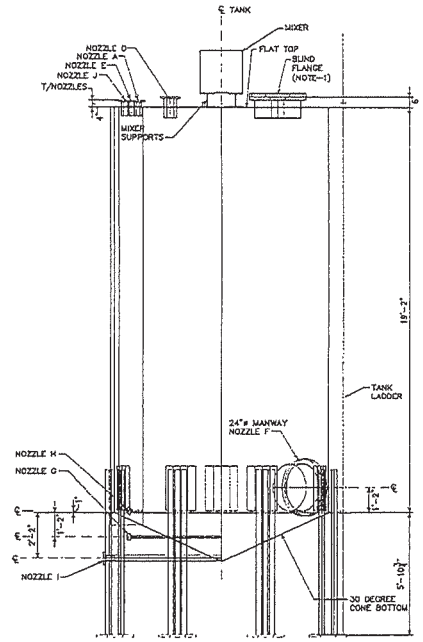

TANK VOLUME: 12,000 GAL.
FABRICATE PER API 620

TANK W12

SCALE: 3/8" = 1'-0"

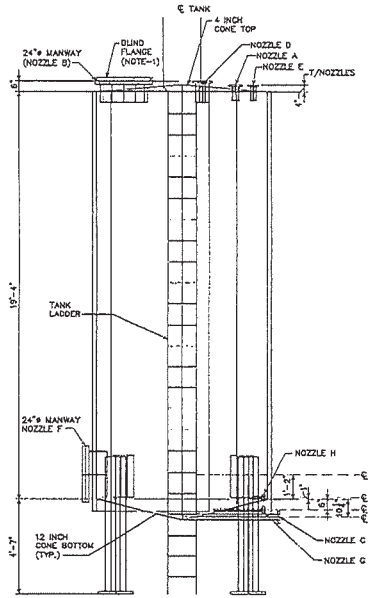

TANK VOLUME: 7,500 GAL.
FABRICATE PER UL 142

TANKS W13 THRU W17

SCALE: 3/8" = 1'-0"

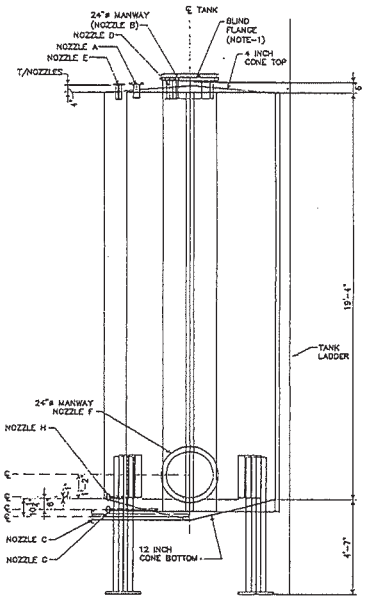

TANK VOLUME: 7,500 GAL.
FABRICATE PER UL 142

TANK W18

SCALE: 3/8" = 1'-0"

TANK NOTES:

1. GASKETS FOR BLIND FLANGED OPENINGS SHALL BE GRAFOIL. BLIND FLANGES SUPPLIED SHALL BE 150LB RATED, AND OF MATERIAL TO MATCH THE TANK. ALL FASTENER HARDWARE (BOLTS, NUTS, AND WASHERS) SHALL BE STAINLESS STEEL.
2. ALL TANKS FABRICATED FROM CARBON STEEL.
3. TANK INTERIOR AND FLANGE FACES SHALL BE BARE STEEL.
4. TANK ACCESS LADDERS SHALL PROVIDE ANTI-FALL PROTECTION.
5. TANK LEGS SHALL BE FIREPROOFED FOR 2 HOUR RATING.
6. PROVIDE TANK LEAK SHIELD COVERING THE STRAIGHT SIDE. PROVIDE SHROUD TO COVER MANWAYS THAT PENETRATE THE LEAK SHIELD.

NOZZLE LEGEND

MARK	DESCRIPTION:	MARK	DESCRIPTION:	MARK	DESCRIPTION:
A	3" FLANGE FOR CONSERVATION/VENT RELIEF	E	2" FLANGE FOR HIGH/HIGH-HIGH ALARM SWITCH	I	3" FLANGE FOR UPPER DRAIN
B	24" FLANGED MANWAY WITH BLIND FLANGE	F	24" FLANGED MANWAY WITH BLIND FLANGE		
C	3" FLANGE FOR FILL/DRAIN	G	1" FLANGE FOR LOWER DECANT		
D	6" FLANGE FOR RADAR LEVEL DEVICE	H	1" FLANGE FOR UPPER DECANT		

THE ENVIRONMENTAL QUALITY COMPANY

EQ RESOURCE RECOVERY, INC
36245 VAN BORN
ROMULUS, MI 48174

HRC
Hubbell, Roth & Clark, Inc.
CONSULTING ENGINEERS
655 HULET DRIVE P.O. BOX 824
BLOOMFIELD HILLS, MICH. 48303-0824
PHONE: (248) 454-6300
FAX (Tel. Flow): (248) 454-6312
FAX (Dra. Flow): (248) 338-3082
WEB SITE: http://www.hrc-eng.com

07-17-06	MDEQ SUBMITTAL
05-24-06	OWNER'S REVIEW
DATE	ADDITIONS AND/OR REVISIONS
DESIGNED	E.C.
DRAWN	T.W.R.
CHECKED	
APPROVED	

RE-ENGINEERING AND DESIGN OF EQ RESOURCE RECOVERY, INC. VAN BORN ROAD PLANT

TANK FARM
TANK DETAILS

HRC JOB NO. 200305883	SCALE AS NOTED
DATE JULY 2006	SHEET NO. TD-03

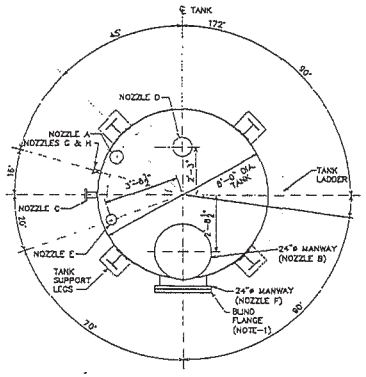

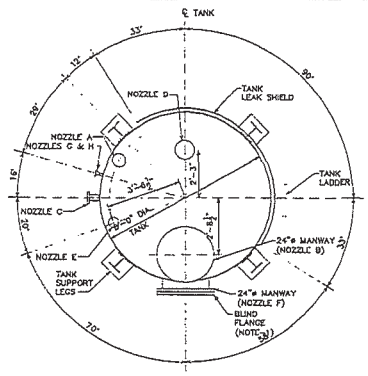

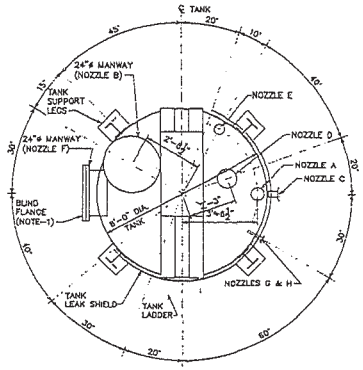

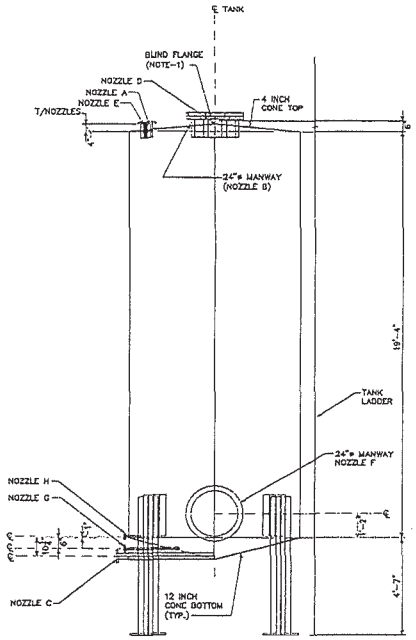

TANK VOLUME: 7,500 GAL.
FABRICATE PER UL 142

TANKS W19, W20 & W21

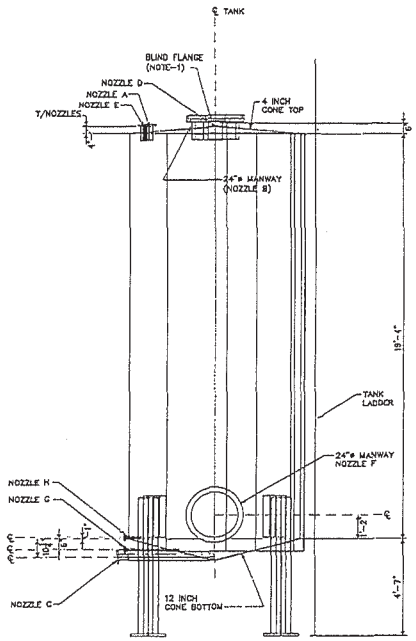

TANK VOLUME: 7,500 GAL.
FABRICATE PER UL 142

TANK W22

SCALE: 3/8" = 1'-0"

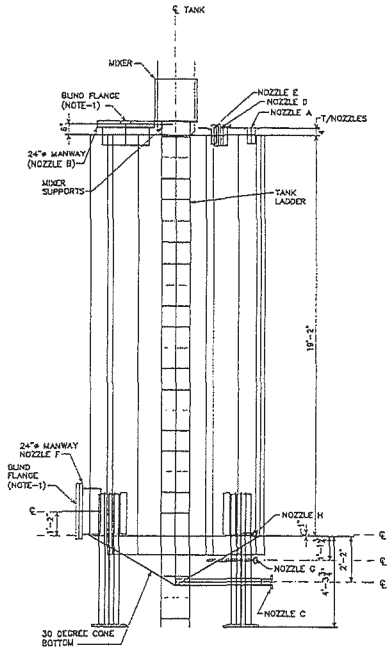

TANK VOLUME: 7,500 GAL.
FABRICATE PER API 620

TANK W23

SCALE: 3/8" = 1'-0"

TANK NOTES:

1. GASKETS FOR BLIND FLANGED OPENINGS SHALL BE GRAFOIL. BLIND FLANGES SUPPLIED SHALL BE 150LB RATED, AND OF MATERIAL TO MATCH THE TANK. ALL FASTENER HARDWARE (BOLTS, NUTS, AND WASHERS) SHALL BE STAINLESS STEEL.
2. ALL TANKS FABRICATED FROM CARBON STEEL.
3. TANK INTERIOR AND FLANGE FACES SHALL BE BARE STEEL.
4. TANK ACCESS LADDERS SHALL PROVIDE ANTI-FALL PROTECTION.
5. TANK LEGS SHALL BE FIREPROOFED FOR 2 HOUR RATING.
6. PROVIDE TANK LEAK SHIELD COVERING THE STRAIGHT SIDE. PROVIDE SHROUD TO COVER MANWAYS THAT PENETRATE THE LEAK SHIELD.

NOZZLE LEGEND

MARK	DESCRIPTION:	MARK	DESCRIPTION:	MARK	DESCRIPTION:
A	3" FLANGE FOR CONSERVATION/VENT RELIEF	E	2" FLANGE FOR HIGH/HIGH-HIGH ALARM SWITCH	I	3" FLANGE FOR UPPER DRAIN
B	24" FLANGED MANWAY WITH BLIND FLANGE	F	24" FLANGED MANWAY WITH BLIND FLANGE		
C	3" FLANGE FOR FILL/DRAIN	G	1" FLANGE FOR LOWER DECANT		
D	6" FLANGE FOR RADAR LEVEL DEVICE	H	1" FLANGE FOR UPPER DECANT		

THE ENVIRONMENTAL QUALITY COMPANY

EQ RESOURCE RECOVERY, INC
36345 VAN BORN
ROMULUS, MI. 48174

HRC
Hubbell, Roth & Clark, Inc.
CONSULTING ENGINEERS
555 HORSLEY DRIVE
BLOOMFIELD HILLS, MICH.
P.O. BOX 824
48303-0824
PHONE: (248) 454-6300
FAX (TEL FIND): (248) 454-6312
FAX (DIAL FIND): (248) 338-2587
WEB SITE: http:// www.hrc-eng.com

DATE	ADDITIONS AND/OR REVISIONS
07-17-06	MDEQ SUBMITTAL
05-24-06	OWNER'S REVIEW

DESIGNED E.C.
DRAWN T.W.R.
CHECKED
APPROVED

RE-ENGINEERING AND DESIGN OF EQ RESOURCE RECOVERY, INC. VAN BORN ROAD PLANT

TANK FARM
TANK DETAILS

HRC JOB NO 20050563
SCALE: AS NOTED
DATE: JULY 2006
SHEET NO TD-04

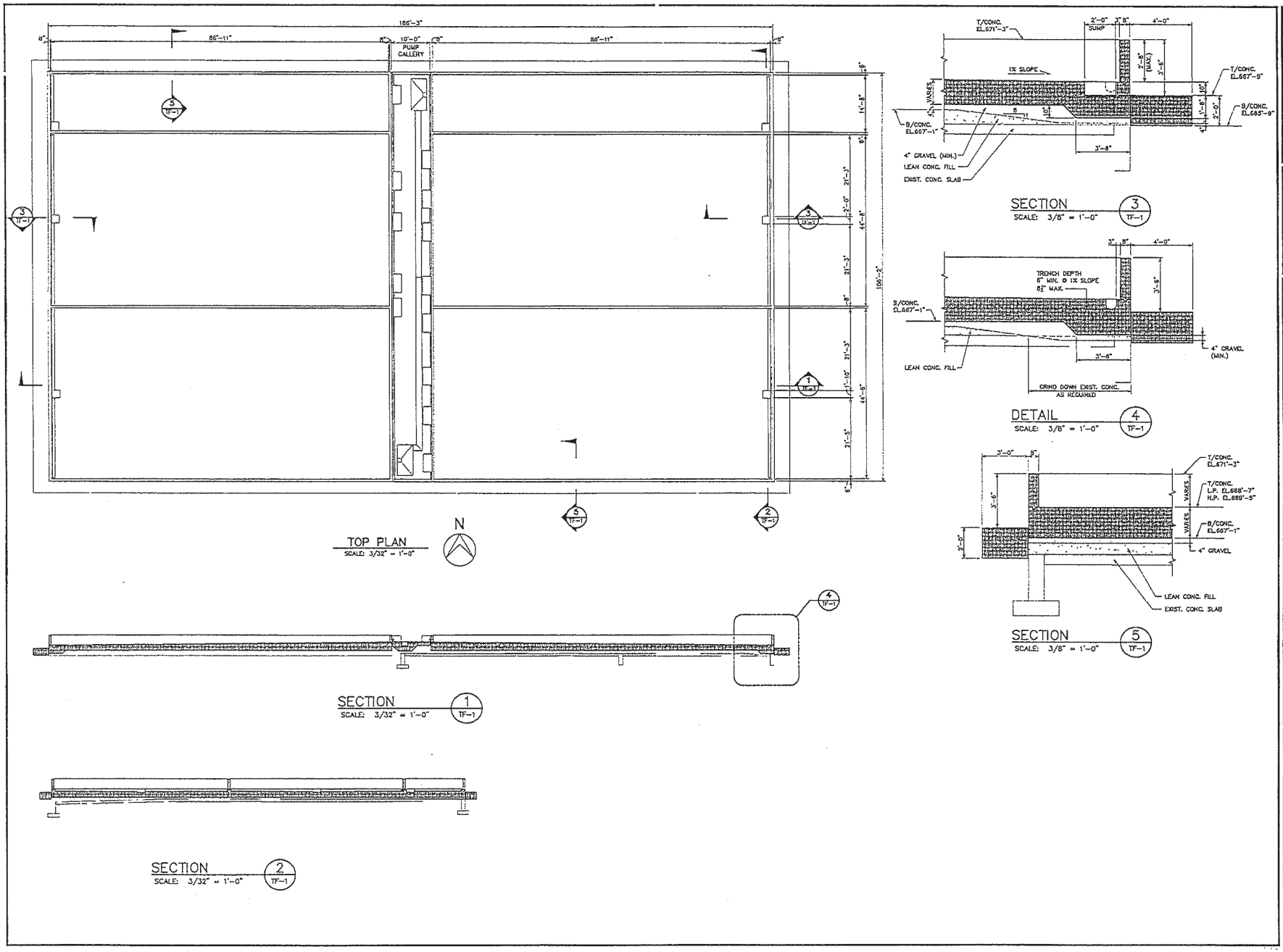

THE ENVIRONMENTAL QUALITY COMPANY

EQ RESOURCE RECOVERY, INC
35345 VAN BORN
ROMULUS, MI. 48174

HRC

Hubbell, Roth & Clark, Inc.
CONSULTING ENGINEERS
555 HULET DRIVE
BLOOMFIELD HILLS, MICH.
P.O. BOX 824
48303 - 0824
PHONE: (248) 454-6290
FAX (Tel. Phone): (248) 454-6312
FAX (Dist. Phone): (248) 338-2682
WEB SITE: http:// www.hrc-eng.com

DATE	ADDITIONS AND/OR REVISIONS
07-17-06	MDEQ SUBMITTAL
07-08-06	OWNER'S REVIEW
05-24-06	OWNER'S REVIEW

DESIGNED	T.C.
DRAWN	K.R.K.
CHECKED	F.C.N.
APPROVED	P.T.R.

RE-ENGINEERING AND DESIGN OF EQ RESOURCE RECOVERY, INC. VAN BORN ROAD PLANT

TANK FARM
PLANS, SCHEDULES & SECTIONS

HRC JOB NO. 20050583	SCALE AS NOTED
DATE JULY 2006	SHEET NO. TF-1

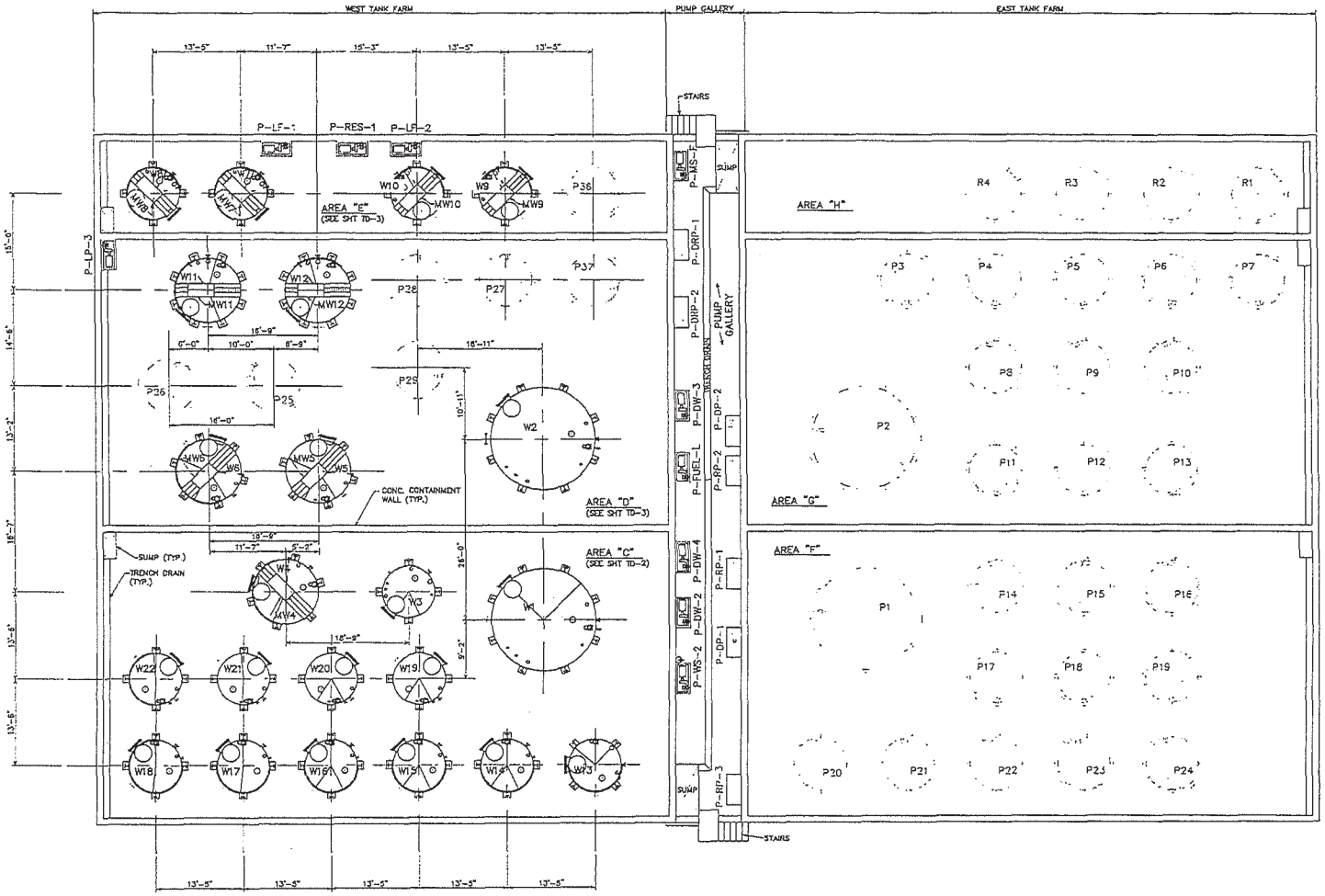

TANK FARM – WASTE TANK & EQUIPMENT PLAN

SCALE: 1/8" = 1'-0"

N

THE ENVIRONMENTAL QUALITY COMPANY

EQ RESOURCE RECOVERY, INC
36345 VAN BORN
ROMULUS, MI 48174

HRC

Hubbell, Roth & Clark, Inc.
CONSULTING ENGINEERS

DATE	ADDITIONS AND/OR REVISIONS
07-17-06	MDEQ SUBMITTAL
05-24-06	OWNER'S REVIEW
02-07-06	MDEQ MEETING
02-01-06	OWNER'S REVIEW

DESIGNED E.C.
DRAWN T.W.R. / A.H.K.
CHECKED
APPROVED

RE-ENGINEERING AND DESIGN OF EQ RESOURCE RECOVERY, INC. VAN BORN ROAD PLANT

TANK FARM WASTE TANK & EQUIPMENT PLAN

HRC-DRAWING 20050683	SCALE AS NOTED
DATE JULY 2006	SHEET NO TP-1

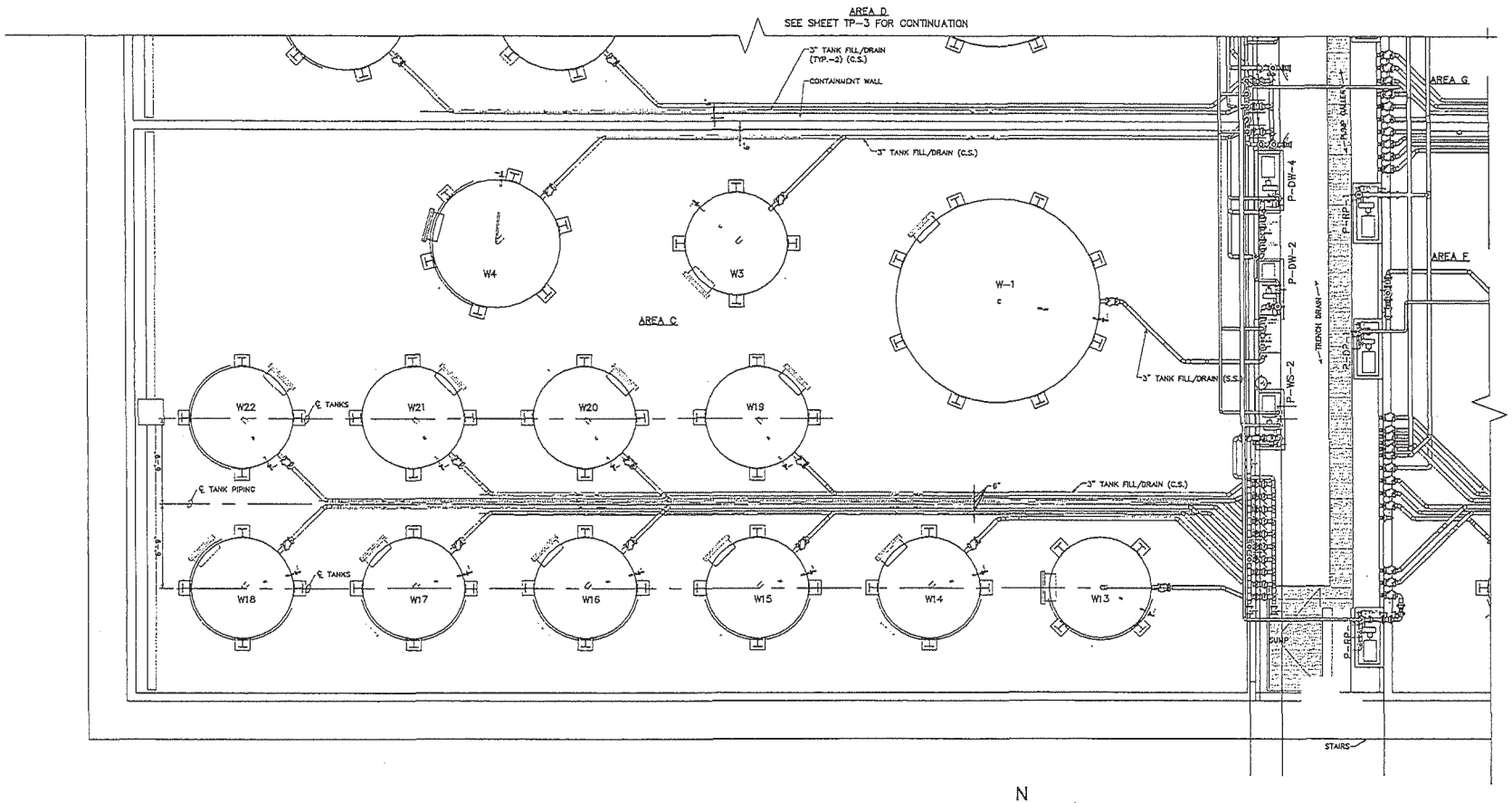

TANK FARM – WASTE TANK PIPING PLAN
SCALE: 1/4" = 1'-0"

NOTE:
SEE P&ID DRAWINGS FOR DETAILED PUMP GALLERY PIPING

THE ENVIRONMENTAL QUALITY COMPANY

EQ RESOURCE RECOVERY, INC
35345 VAN BORN
ROMULUS, MI. 48174

HRC
Hubbell, Roth & Clark, Inc.
CONSULTING ENGINEERS
555 MULET DRIVE
BLOOMFIELD HILLS, MICH.
P.O. BOX 824
48303-0824
PHONE: (248) 454-6383
FAX (1st. Floor): (248) 454-6312
FAX (2nd. Floor): (248) 338-2502
WEB SITE: http:// www.hrc-eng.com

07-17-06	MDEQ SUBMITTAL
05-24-06	OWNER'S REVIEW
DATE	ADDITIONS AND/OR REVISIONS
DESIGNED	E.C.
DRAWN	T.W.R. / A.H.K.
CHECKED	
APPROVED	

RE-ENGINEERING
AND DESIGN OF
EQ RESOURCE
RECOVERY, INC.
VAN BORN ROAD PLANT

TANK FARM
WASTE TANK PIPING PLAN
AREA "C"

HRC JOB NO. 20050683	SCALE AS NOTED
DATE JULY 2006	SHEET NO. TP-2 OF

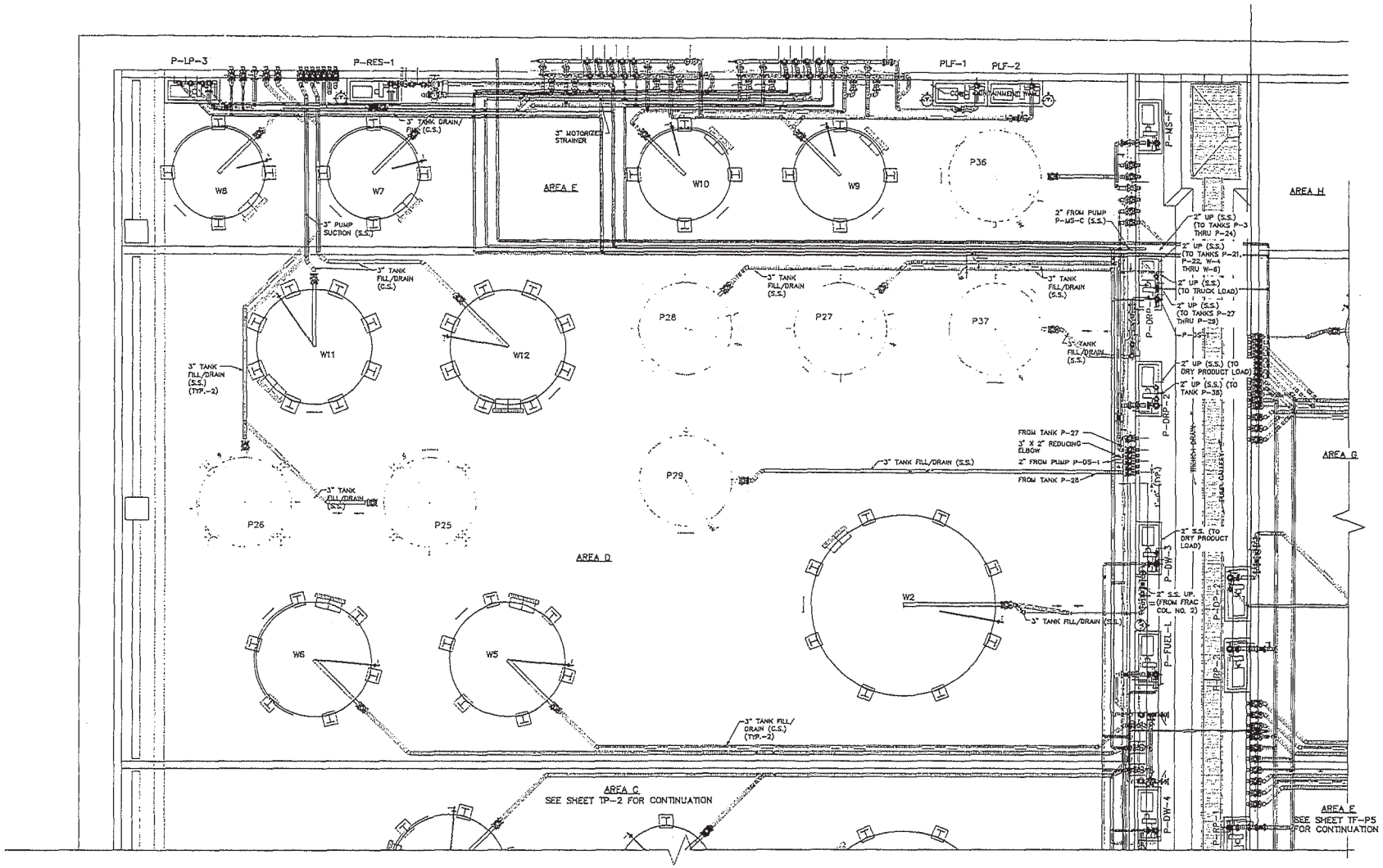

TANK FARM – WASTE TANK PIPING PLAN

SCALE: 1/4" = 1'-0"

N

NOTE:
SEE P&ID DRAWINGS FOR DETAILED PUMP GALLERY PIPING

THE ENVIRONMENTAL QUALITY COMPANY

EQ RESOURCE RECOVERY, INC
38345 VAN BORN
ROMULUS, MI. 48174

HRC

Hubbell, Roth & Clark, Inc.
CONSULTING ENGINEERS

DATE	ADDITIONS AND/OR REVISIONS
07-17-06	MDEQ SUBMITTAL
05-24-06	OWNER'S REVIEW

DESIGNED E.C.
DRAWN T.W.R. / A.H.K.
CHECKED
APPROVED

RE-ENGINEERING AND DESIGN OF EQ RESOURCE RECOVERY, INC. VAN BORN ROAD PLANT

TANK FARM
WASTE TANK PIPING PLAN
AREA "D"

SCALE AS NOTED
SHEET NO TP-3

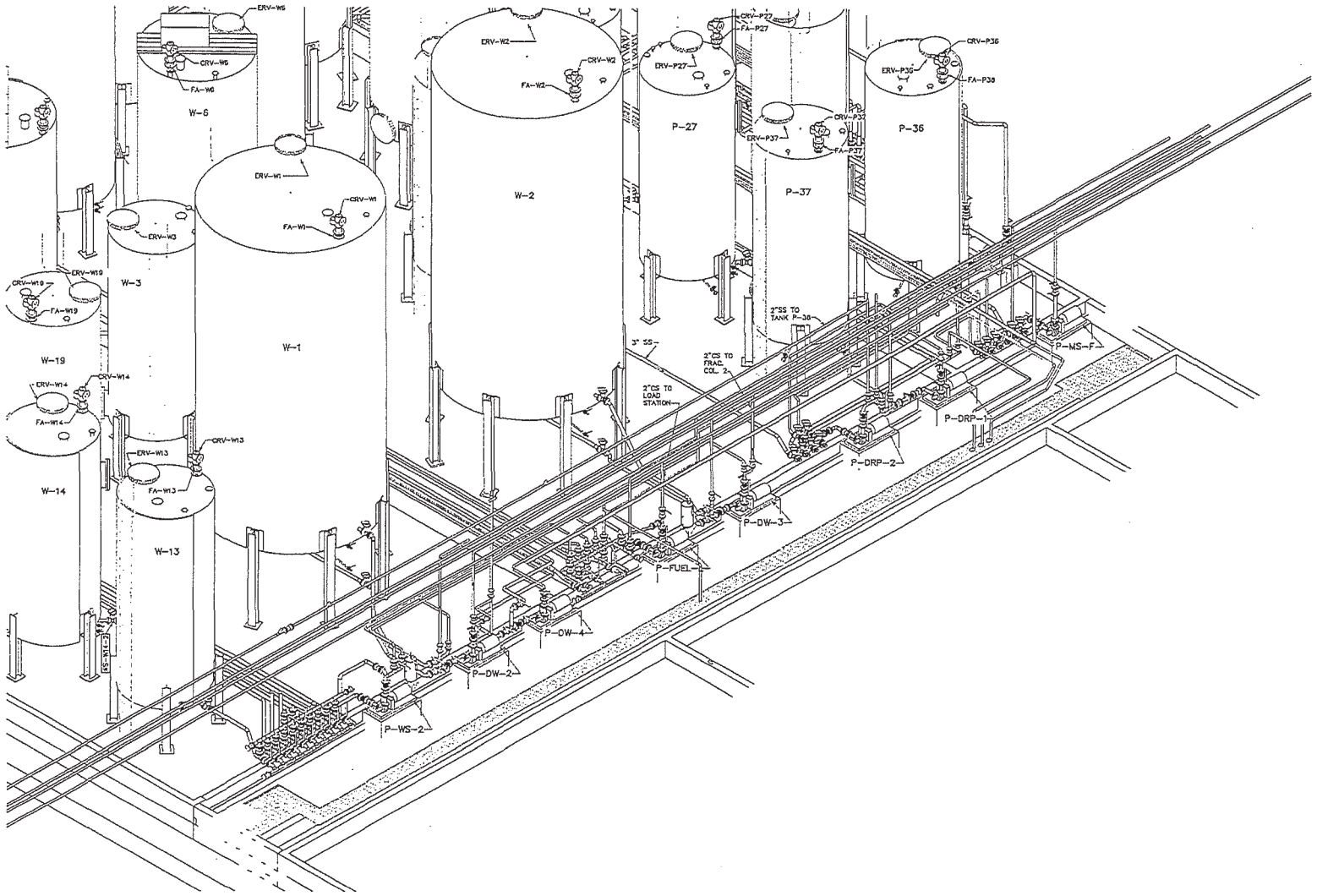

NOTE:
SEE P&ID DRAWINGS FOR DETAILED PUMP GALLERY PIPING

THE ENVIRONMENTAL QUALITY COMPANY

EQ RESOURCE RECOVERY, INC
35345 VAN BORN
ROMULUS, MI 48174

HRC

Hubbell, Roth & Clark, Inc.
CONSULTING ENGINEERS

555 WILET DRIVE
BLOOMFIELD HILLS, MICH.

P.O. BOX 824
48303-0824

PHONE: (248) 454-6300
FAX (Tel. Fax): (248) 454-6312
FAX (Adm. Fax): (248) 334-2652
WEB SITE: http:// www.hrc-inc.com

DATE	ADDITIONS AND/OR REVISIONS
07-17-06	MDEQ SUBMITTAL
05-24-06	OWNER'S REVIEW

DESIGNED E.C.
DRAWN T.W.R. / A.H.K.
CHECKED
APPROVED

RE-ENGINEERING AND DESIGN OF EQ RESOURCE RECOVERY, INC. VAN BORN ROAD PLANT

TANK FARM GALLERY ISOMETRIC FACING NORTHWEST

HRC JOB NO. [illegible]
SCALE 1/4" = 1'-0"
DATE [illegible]
SHEET NO TP-4 OF

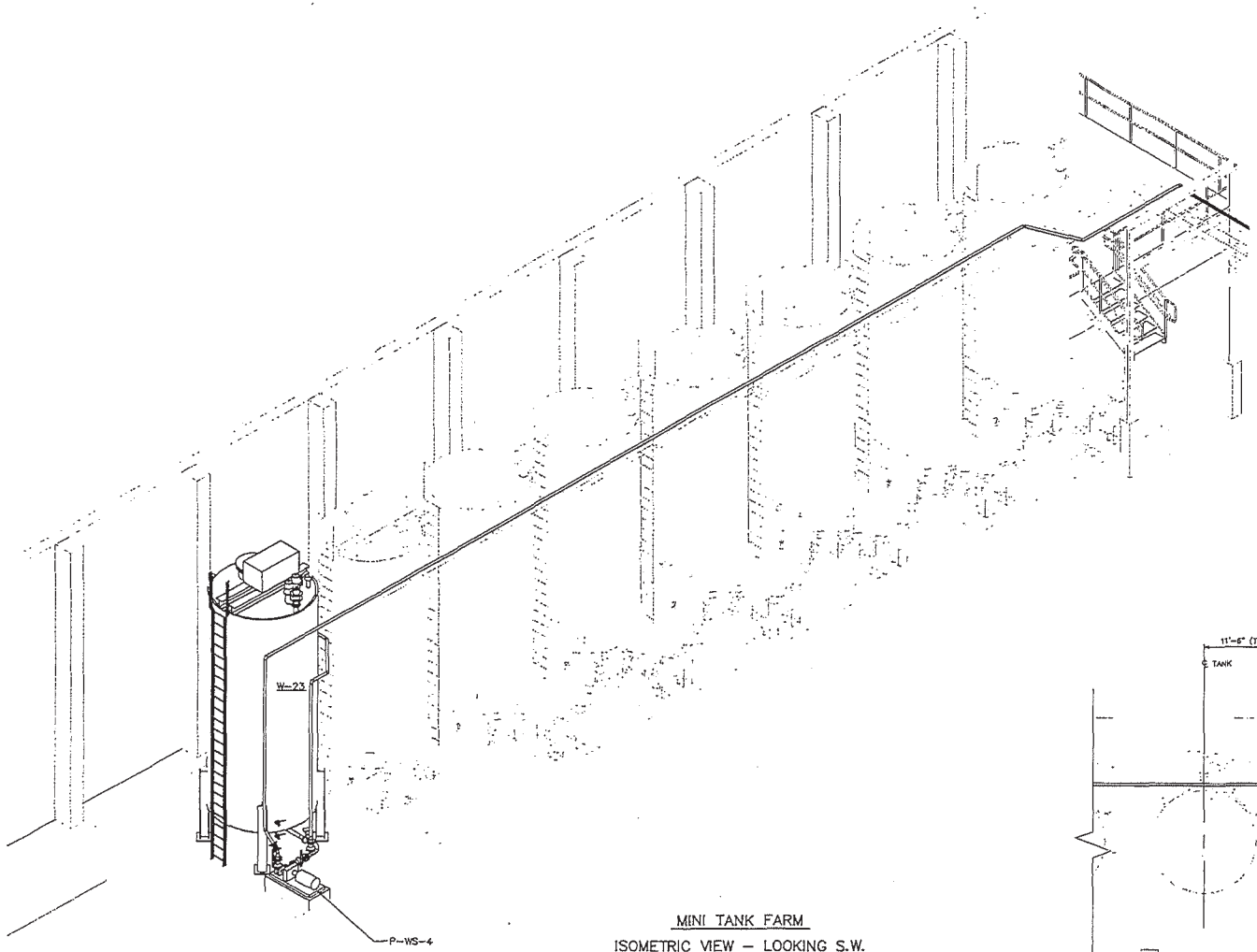

MINI TANK FARM

ISOMETRIC VIEW – LOOKING S.W.

SCALE: 1/4" = 1'-0"

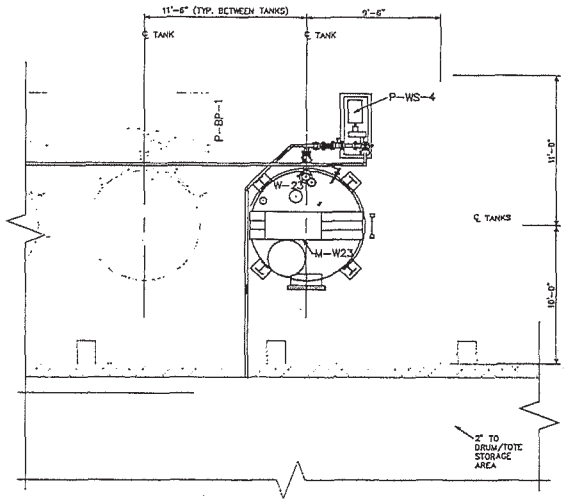

MINI TANK FARM

PARTIAL PLAN

SCALE: 1/4" = 1'-0"

THE ENVIRONMENTAL QUALITY COMPANY

EQ RESOURCE RECOVERY, INC
36345 VAN BORN
ROMULUS, MI. 48174

HRC

Hubbell, Roth & Clark, Inc.
CONSULTING ENGINEERS

07-17-06	MDEQ SUBMITTAL
DATE	ADDITIONS AND/OR REVISIONS
DESIGNED	E.C.
DRAWN	T.W.R. / A.H.K.
CHECKED	
APPROVED	

RE-ENGINEERING AND DESIGN OF EQ RESOURCE RECOVERY, INC. VAN BORN ROAD PLANT

CONTAINER MANAGEMENT BUILDING AND MINI TANK FARM ISOMETRIC

HRC JOB NO 20050683	SCALE AS NOTED
DATE JULY 2006	SHEET NO TP-5 OF