Michigan Department of Environmental Quality
Water Resources Division

APPLICATION UNDER COUNTY DRAINS GENERAL PERMIT CATEGORY

INSTRUCTIONS

This application may be used by a Drain Commissioner, Drainage Board, or by the Michigan Department of Agriculture and Rural Development (MDARD) on behalf of an Intercounty Drainage Board, for non-exempt activities conducted in legally established and constructed drains pursuant to the drain code of 1956, PA 40, MCL 280.1 to 280.630 that meet all requirements as set forth in the General Permit (GP) category for County Drains. Activities undertaken by an individual, agency, or developer that are not part of a drain project conducted pursuant to the drain code are not included in this category.

This application is for the following types of activities that fit within the limits of the GP for County Drains when performed with best management practices (BMPs):

- Clear span bridges.
- Short culverts.
- Culvert end sections, headwalls, wingwalls.
- Riprap.
- Long culverts.
- Drain realignments.
- Installation of vanes and riffles.

Detailed descriptions of the activities eligible for authorization under the GP and their associated requirements are found in Appendix A of this application. Individuals seeking to complete projects that are associated with sensitive natural resources or other GP exclusions as identified in the GP categories, or projects that require activities not explicitly listed in the County Drains GP Category, must complete the joint permit application, available at www.michigan.gov/jointpermit.

Submitting the Application and Filing Fee

A separate application must be submitted for each project. All appropriate sections of the application must be filled out for each project and accompanied by a map identifying each activity location in the overall project. Multiple activities within a project can and should be combined into one application (e.g, several culverts and riprap locations on one drain that are bid and constructed as one project). Additional Project Activity Sheets for each proposed activity are found in Appendix B and are to be completed and attached with the submittal.

The Michigan Department of Environmental Quality (DEQ) will make a decision regarding an application under the County Drains GP Category within 30 days of receiving a complete application. Authorizations will be valid until December 31 of the year following the year in which the authorization is granted. Application should be sent directly to the DEQ district office with a fee of $50; check or money order payable to the State of Michigan. Visit www.mi.gov/jointpermit "Permit Application Payment Options" for directions to pay by credit card or electronic fund transfer payment. Refer to the DEQ Land/Water interface Permitting Staff Map for District contact information at http://www.michigan.gov/documents/deq/wrd-permit-staff_402908_7.pdf or see www.mi.gov/jointpermit "who to contact" for addresses and/or phone numbers. Drainage Districts that cross DEQ District boundaries should be sent to the DEQ District containing the primary work effort. This form cannot be used in areas of joint jurisdiction with the U.S. Army Corps of Engineers (USACE) (for a list of these areas in Michigan, see http://www.lre.usace.army.mil/Missions/RegulatoryProgramandPermits.aspx).

Project Reporting

By December 31 of each year, the applicant shall submit a report to the DEQ for each drain project that includes activities performed under the County Drain GP during that calendar year with the following information:

- The name of the drain and the location and nature of the activities performed.
- Plan detail showing the activity authorized under the County Drain GP category and an affidavit signed by a licensed engineer verifying that the licensed engineer reviewed the plans before construction commenced and inspected the work and verified that the activity met all the requirements of the category.
- Photos taken from the same vantage points prior to construction activities and after the work is completed.

A drain commissioner or drainage board is not eligible to be granted a new authorization under this GP if significant violations of the general permit under a previous authorization granted to that drain commissioner or drainage board have not been corrected.

AGENCY USE		DEQ Application Under County Drains General Permit Category	Date Received:	DEQ File Number:
				DEQ District Office:
				Fee received:

Applicant Information

Drain Commisioner Name or MDARD: _____

Contact Person: _____ Email: _____ Phone: _____ Cell: _____

Address: _____ City: _____ State: _____ Zip: _____

Project Information

Include a Vicinity Map showing the project location that includes all streets, roads, intersections, highways, and cross-roads to the project.

Location Information: County(ies) _____ Town _____ Range _____ Section(s) _____

Nearest road intersection: _____

Name of County Drain where activities will be performed: _____

Was this Drain legally established and constructed prior to January 1, 1973? ☐ yes ☐ no If no, provide the DEQ issued permit number: _____

If applicable, DEQ File Number associated with this project (e.g, pre-application or Request for Coordination): _____

Is there a DEQ Conservation Easement associated with this project? ☐ yes ☐ no If yes, attach easement information.

Is there USACE authorization needed for this project? ☐ yes ☐ no

Have any of the activities proposed in this application (excluding exempt activities) commenced? ☐ yes ☐ no

Proposed Activities

Each activity proposed in this application shall comply with the specific requirements as detailed in the County Drains General Permit Category; please read the entire category found in Appendix A. Check all of the following activities that will be completed as part of this project and provide the associated information for each activity on the attached Project Activity Sheets (as indicated below) found in Appendix B. For each activity checked, clearly identify the location(s) where the activity will occur on an accompanying map with the activity label as listed below and on the attached sheets.

- ☐ B - Clear Span Bridges (New and/or replacement). Attach Sheet #1
- ☐ C - Culverts (Short and/or Long; New and/or Replacement). Attach Sheet #2
- ☐ E - Culvert End Sections, Headwalls & Wingwalls (New and/or Replacement). Attach Sheet #3
- ☐ R – Riprap. Attach Sheet #4
- ☐ DR - Drain Realignment. Attach Sheet #5
- ☐ VR- Installation of Vanes and/or Riffles. Attach Sheet #6, #7, and/or #8

Applicant's Certification: READ CAREFULLY BEFORE SIGNING

I am applying for authorization for activities included in the DEQ General Permit (GP) Category for County Drains and described in this permit application and attached project activity sheets. I certify that I am familiar with the County Drain GP category requirements and that project activities will be in compliance with the requirements of the GP category. I agree to reinstall any activities (e.g. bridges, culverts, riprap, realignment, or in-stream structure) if it does not comply with the requirements of the GP category. I certify that the activities are to be undertaken by a Drain Commissioner, or Drainage Board or the MDARD on behalf of an Intercounty Drainage Board, in a drain that was legally established and constructed pursuant to the drain code of 1956, 1956 PA 40, MCL 280.1 to 280.630; furthermore that these activities are not to be undertaken by an individual agency or developer that are not part of a drain project conducted pursuant to the drain code. If at any time it is determined that an activity is being or has been conducted that does not meet the requirements under the GP category, the drain commissioner or drainage board shall immediately stop any work at the site and notify the DEQ. By December 31 each year, the drain commissioner, drainage board, or MDARD on behalf of Intercounty Drainage Boards, shall submit a complete report to the DEQ for each drain project that includes activities performed under this permit category during that calendar year and verification that the project activities meet the specific requirements in the GP category for that type of activity. I also understand that this permit, if granted, carries the requirement of submitting detailed end-of-year reports and that failure to do so or failure to show compliance with the GP category will result in possible violations and ineligibility to receive this GP authorization in subsequent years if the deficiencies have not been corrected. I understand that this application is only for activities under Part 301, Inland Lakes and Streams, of the Natural Resources and Environmental Protection Act (NREPA) 1994 PA 451, as amended, and that it does not cover activities that impact wetlands or other areas regulated under the NREPA.

I also certify that I am familiar with the information in this application, that it is true and accurate, and to the best of my knowledge, is in compliance with the State Coastal Zone Management Program. I understand that there are penalties for submitting false information and that any permit issued pursuant to this application may be revoked if information on this application is untrue. I certify that I have the authority to undertake the activities proposed in this application. By signing this application I agree to allow representatives of the DEQ, USACE, and/or their agents to enter said property in order to inspect the proposed activities before and during construction and after completion of the project. I understand that I must obtain all other necessary local, county, state, or federal permits and that the granting of other permits by local, county, state, or federal agencies does not release me from the requirements of obtaining the permit requested herein before commencing the activity. I understand that the payment of the application fee does not guarantee the issuance of a permit.

Drain Commissioner's or MDARD Printed Name	Drain Commissioner's or MDARD Signature	Date

APPENDIX A
County Drains General Permit Category

The following is an excerpt from the General Permit (GP) Categories in the State of Michigan document dated February 19, 2014. The proposed activities must meet the specific criteria of the County Drains category in addition to the General Criteria, Exclusions, and General Conditions found in the original GP Categories document. The County Drains Category applies only to Part 301, Inland Lakes and Streams, of the NREPA.

Y. County Drains

Activities conducted in legally established drains pursuant to the Drain Code for an identified drain project as outlined below. When an application for a project is received by the DEQ under this category, the DEQ shall make a decision on an authorization within 30 days. Authorizations under this category shall be valid until December 31 of the year following the year in which the authorization is granted.

By January 20 of each year, a drain commissioner or drainage board may submit a Request for Coordination that includes a list of known project locations planned for the year, the anticipated date of application submittal for each project location, and an agreement to the terms of this category. The DEQ shall respond by March 1. A separate application must be submitted for each project location a minimum of 30 days prior to the anticipated start date.

Activities in this category shall meet the following:

- Only a drain commissioner or drainage board or the MDARD on behalf of an Intercounty Drainage Board may apply for an authorization under this category.
- The activities are in a drain that was legally established and constructed pursuant to the drain code of 1956, 1956 PA 40, MCL 280.1 to 280.630. Activities undertaken by an individual, agency, or developer that are not part of a drain project conducted pursuant to the drain code are not included in this category.
- Planting and seeding below the ordinary high water mark (OHWM) shall be comprised only of species that are considered native to Michigan according to the Floristic Quality Assessment for the State of Michigan.
- Temporary stabilization measures shall be installed before or upon commencement of the authorized activity, and shall be maintained until permanent measures are in place. Permanent measures shall be in place within five days of achieving final grade.
- The activities shall not cause damage to property or a threat to life or personal injury.
- This category does not include activities in wetlands.

If at any time it is determined that an activity being conducted or has been conducted under an authorization under this category does not meet the requirements under this category, the drain commissioner or drainage board shall immediately stop any work at the site and submit the following information to the DEQ within 30 days:

- The activities that have occurred, their specific location, photos, and site plans.
- The date the work was undertaken.
- A restoration plan indicating the actions that will be undertaken to bring the site into compliance with the requirements above and a time line for compliance not to exceed 90 days.
- Any other relevant information.

A drain commissioner or drainage board shall not receive a new authorization under this category if significant violations of this category under a previous authorization granted to that drain commissioner or drainage board have not been corrected.

By December 31 of each year, the drain commissioner or drainage board shall submit a report to the DEQ for each drain project that includes activities performed under this permit category during that calendar year that includes the following:

- The name of the drain and the location and nature of the activities performed.
- Plan detail showing the activity authorized under this category and an affidavit signed by a licensed engineer verifying that the licensed engineer reviewed the plans before construction commenced and inspected the work and verified that the activity met all the requirements of this category.
- Photos taken from the same vantage points prior to construction activities and after the work is completed.

After the report has been submitted, the DEQ shall determine the projects that it will site inspect to determine compliance with this category.

A copy of the specifications of this category shall be a part of all authorizations issued under this category.

For the purposes of this category, bankfull is the width of the stream that corresponds to the depth where water fills a main channel to the point of overflowing. In instances where the applicant is unsure of the bankfull width, it is recommended that the applicant contact the DEQ and request a pre-application site review. In legally established drains (except those constituting mainstream portions of certain natural watercourses identified in rule), the bankfull width may be determined by: (1) bankfull indicators in the field, (2) calculating the 1.5-year stream width at the 1.5-year flow that is based on a stable stream width and depth, or (3) by applying the regional reference curves in the report, "Estimated Bankfull Discharge for Selected Michigan Rivers and Regional Hydraulic Geometry Curves for Estimating Bankfull Characteristics in Southern Michigan Rivers," or other DEQ approved report.

The total length of new culverts (enclosures) per drain project under this category shall be less than 300 feet, including end sections. New culvert enclosures shall not exceed 150 feet per mile per project. For the purposes of this category, the portion of the structure that has mitered ends or end sections with no top shall not be considered part of the enclosure length.

1. For Part 301, Inland Lakes and Streams, of the NREPA, the following activities may be authorized under this category in legally established and constructed drains pursuant to the drain code of 1956, 1956 PA 40, MCL 280.1 to 280.630, if performed with BMPs:

   a. Clear span bridges: New or replacement clear span bridges that meet all of the following:

      - Any abutment foundations or piers must be placed at a minimum of 1.2 times the bankfull width.
      - The lowest bottom beam elevation is at or above the natural ground elevations on either bank and spans the entire bankfull width.
      - The structure will allow passage of watercraft that could be expected to navigate the water involved.
      - The bridge shall be anchored to prevent floatation during periods of high water.
      - The placement of riprap shall be limited to the minimum necessary to ensure proper stabilization of the side slopes and fill in the immediate vicinity of the bridge. Riprap placement shall not extend upstream or downstream of the bridge more than 25 feet on each end and shall be a maximum of 25 cubic yards. Riprap shall be properly sized based on velocity and consist of natural field stone or rock. Broken concrete, free of protruding metal, contaminants, and other foreign material, may be allowed in legally established drains except those constituting mainstream portions of certain natural watercourses identified in rule.

   b. Short Culverts: New or nonexempt replacement culverts that are 6 feet or less in span and 30 feet or less in length that meet all of the following:

      - The culvert must be bottomless (3-sided), or if the structure has a bottom, the invert elevation must be buried/set below the drain design grade 1/6 of the bankfull width up to a maximum buried depth of 1 foot. For streams with a bankfull width of 3 feet or less, burial is not required in non-alluvial channels (e.g., bedrock substrate).
      - The culvert spans a minimum of bankfull width.
      - The culvert is aligned with the centerline of the stream.
      - For replacements, the existing culvert cannot be perched (i.e., a culvert with an outlet invert elevated above the downstream water surface, allowing a freefall condition).
      - The culvert must be placed at a flat slope or at an approved design slope of a legally established drain. For stream crossings with an approximate slope of 3% or greater, the structure must be bottomless (or a clear span bridge) to be included in this category.
      - The placement of riprap shall be limited to the minimum necessary to ensure proper stabilization of the side slopes and fill in the immediate vicinity of the culvert. Riprap placement shall not extend upstream or downstream of the culvert more than 25 feet on each end and shall be a maximum of 25 cubic yards. Riprap shall be properly sized based on velocity and consist of natural field stone or rock. Broken concrete, free of protruding metal, contaminants, and other foreign material, may be allowed in legally established drains, except those constituting mainstream portions of certain natural watercourses identified in rule.

   c. Culvert End Sections, Headwalls, and Wingwalls. Installation or replacement of culvert end sections, headwalls, and wingwalls, that meet all the following:

- The end area of the end section must be equal to or greater than the existing structure's end area and the length of the end section shall be a maximum of 12 feet.
- Dredging and/or filling are limited to the minimum necessary to install the structure.
- The proposed inverts shall be at or below the existing stream bottom.
- The structure shall be designed and placed to ensure that any increase in stream erosion or downcutting is prevented.
- The placement of riprap shall be limited to the minimum necessary to ensure proper stabilization of the side slopes and fill in the immediate vicinity of the culvert. Riprap placement shall not extend upstream or downstream of the culvert more than 25 feet on each end. Total fill, including riprap, shall be a maximum of 25 cubic yards. Riprap shall be properly sized based on velocity and consist of natural field stone or rock. Broken concrete, free of protruding metal, contaminants, and other foreign material, may be allowed in legally established drains except those constituting mainstream portions of certain natural watercourses identified in rule.
- The existing culvert is not perched (i.e., a culvert with an outlet invert elevated above the downstream water surface, allowing a freefall condition).

d. Riprap: Placement of a total of less than 500 linear feet of riprap per drain project for toe protection, spillways, and other preventative measures, that meets all the following:

- Riprap shall be properly sized based on velocity and consist of natural field stone or rock. Broken concrete, free of protruding metal, contaminants, and other foreign material, may be allowed in legally established drains, except those constituting mainstream portions of certain natural watercourses identified in rule.
- Riprap shall be less than 1 cubic yard per linear foot and shall not be used for full lining of the channel.
- The riprap shall be recessed to match bank and bottom grades and shall not impair surface water flow.
- Excavation shall be limited to the amount necessary for erosion protection.

2. For Part 301, Inland Lakes and Streams, of the NREPA, the following activities may be authorized under this category in legally established and constructed drains pursuant to the drain code of 1956, 1956 PA 40, MCL 280.1 to 280.630, if performed with BMPs. This subcategory does not apply to mainstream portions of certain natural watercourses identified in rule.

a. Long Culverts: New or nonexempt replacement structures that are 100 feet or less in length each that meet all of the following:

- The structure must be bottomless (3-sided or a clear span bridge), or if the structure has a bottom, the invert elevation must be buried below the stream bottom 1/6 of the bankfull width up to a maximum buried depth of 2 feet. Alternatively, the bottom of the structure may be buried 6 inches to 1 foot below the drain design grade if the structure bottom is more than 1/6 of the bankfull width (up to a maximum of 2 feet) below the existing stream bottom and if the structure bottom is stabilized with properly sized riprap that does not extend above the design grade elevation.
- Structures shall be set on the same slope as the deepest part of the riffle channel measured from the upstream riffle to a downstream riffle outside of the effects of any existing culvert, or at an approved design slope. For stream crossings with a slope of 3% or greater and more than 3 feet in span, a bottomless (3-sided) structure or clear span bridge is required to meet this category.
- The structure must span a minimum of the bankfull width of the stream.
- For the replacement of a perched culvert (i.e., a culvert with an outlet invert elevated above the downstream water surface, allowing a freefall condition), grade control structures may be required.
- The structure shall be installed to align with the centerline of the stream at both the inlet and outlet ends. If needed, up to 25 feet of the channel at either end can be reshaped to allow for a smooth transition. The bankfull width must be maintained for any reshaped areas. Meanders upstream or downstream of the culvert shall not be eliminated when creating a smooth transition. For new culverts 70 feet in length or longer, the 25 feet of channel at both ends of the culvert shall be improved by at least one of the following methods: (1) the entrenchment ratio shall be improved over the existing condition and be at least 1.4 or greater, (2) a bankfull bench on each bank equal to at least 1/3 the bankfull width shall be constructed, or (3) bioengineered bank stabilization that meets MP 2 shall be installed.
- The structure will allow passage of watercraft that could be expected to navigate the water involved.

- The placement of riprap shall be limited to the minimum necessary to ensure proper stabilization of the side slopes and fill in the immediate vicinity of the culvert. Riprap placement shall not extend upstream or downstream of the culvert more than 25 feet on each end and shall be a maximum of 25 cubic yards. Riprap shall be properly sized based on velocity and consist of natural field stone or rock. Broken concrete, free of protruding metal, contaminants, and other foreign material, may be allowed in legally established drains except those constituting mainstream portions of certain natural watercourses identified in rule.

b. Drain realignments: A drain realignment of up to 300 linear feet per drain project that increases aquatic resource functions and services by meeting all of the following:

- The entrenchment ratio of the drain shall be improved over the existing condition and be at least 1.4 or greater.
- The existing drain runs parallel to the road.
- The realignment is within the existing drain or road right-of-way.
- The realigned drain shall not exceed the depth and bottom width of the existing drain.
- The realigned drain shall retain the same slope and bed features (e.g., riffles and substrate) and consistent length as the existing drain.

c. Installation of vanes and riffles: The installation of cross-vanes, j-hooks, rock vanes, and riffles associated with the restoration, enhancement, and establishment of riparian and stream habitat that are compatible with the dimension, pattern, profile, and bed features of the stream channel, that increases aquatic resource functions and services, and that meets all the following:

- The channel slope/design grade shall not exceed 1%.
- The height of the vane or riffle shall only extend to the bankfull stage elevation. If the bank is higher than the bankfull stage elevation and the drain is entrenched (an entrenchment ratio of less than 1.4), an adequately sized bankfull bench shall be constructed, and the vane or riffle shall be integrated into the bench. For rock vanes and j-hooks, the bench shall be located on the bank nearest the vane arm. For cross-vanes or riffles, the bench must be constructed on both banks. For all structures, the minimum width of each bench shall be equal to 1/3 the bankfull width. The minimum length of the bench shall be equal to 1.5 times the arm length or riffle length, with the upstream end of the bench directly parallel to the invert of the vane or the upstream end of the riffle. If the drain is not entrenched (an entrenchment ratio equal to or greater than 1.4), the bankfull bench may be provided by the existing drain cross-section.
- The invert of each vane (the elevation of the top of the rock located at the most upstream point of the structure) or the crest of the riffle within a series shall be set at an elevation above the bed up to 0.1 times the bankfull depth where bankfull depth is measured at the deepest part of the channel cross-section at a natural riffle or, if no natural riffles are present, the shallowest part of a run. In drains where the bed elevation is being lowered to reestablish the original design grade, the invert of the vane or the crest of the riffle shall be set at an elevation above the bed up to 0.1 times the bankfull depth (as measured preconstruction) above the reestablished bed elevation. This category does not include activities that raise the grade of the stream bed above 0.1 times the bankfull depth.
- All vane structures shall include footers. Riffles shall include footers at the crest of the riffle. For sand bed streams, the minimum footer depth shall be 6 times the protrusion height of the invert rock due to the deeper scour depths that occur. For other streams, the minimum footer depth shall be 3 times the protrusion height of the invert rock.
- All vanes shall be adequately keyed into the bank as to prevent erosion of the bank (i.e., at least 2 footer rocks). Riffles shall be keyed in at the crest of the riffle. Sills on j-hooks may be included if needed based on site conditions.
- Vanes and riffles shall be inspected following significant rainfall events until the stream banks have been stabilized to ensure there is no erosion occurring around the structure. Repairs shall be initiated as soon as possible following inspection.

In addition, vanes shall also meet all of the following:

- All vanes shall be oriented in an upstream direction.
- Multiple vanes in a series shall be spaced so that the downstream structure is not influenced by the effects of the adjacent upstream structure.

- Acceptable vane materials shall be rock, logs, and rootwads, or a combination thereof. Geotextile fabric shall be used to prevent scour under the structure when logs are used or when rocks are used in sand or silt/clay bed channels.
- The width of the vane arm portion of the structure shall occupy 1/3 of the bankfull width of the channel/drain and the invert portion (the "hook") shall occupy the center 1/3 of the channel/drain.
- The angle of the vane arm portion shall be 20 to 30 degrees, measured upstream from the tangent line where the vane intercepts the bank.
- The slope of the vane extending from the bankfull stage bank shall be between 2% and 10%. For the purpose of this category, vane slope is defined by the ratio of bank height/vane length. The vane length distance shall be measured from the bankfull bank to the intercept with the invert elevation of the streambed at 1/3 of the bankfull channel width.
- The minimum rock size shall be determined by calculating the bankfull shear stress and then multiplying by 1.5, but shall be at least 1 foot in diameter in size.
- This category does not include construction of a scour pool below the structure although one may form through natural stream processes.

In addition, riffles shall also meet all of the following:

- Multiple riffles in a series shall be spaced at a distance that is consistent with the spacing of the existing riffle-pool sequence, or in cases where there is no existing riffle-pool sequence, the riffles shall be spaced a minimum of 5 times the bankfull width apart as measured from riffle crest to riffle crest.
- The slope of the riffle on the upstream side of the riffle crest shall have a 4 to 1 slope. The slope of the riffle on the downstream side of the riffle crest shall have a 20 to 1 slope.
- The cross-section of the riffle downstream of the riffle crest shall be formed in a "V" shape that slopes gently from the bankfull stage elevation to the invert of the riffle (i.e., at the crest of the riffle, the invert is set at the elevation above the bed up to 0.1 times the bankfull depth, and at the downstream end of the riffle, the invert is at the bed elevation).
- The minimum rock size shall be determined by calculating the bankfull shear stress. The void spaces shall be filled with a mix of 1/2-inch to 3-inch diameter rocks. The minimum rock size of the footers shall be determined by calculating the bankfull shear stress and then multiplying by 1.5.

APPENDIX B
County Drains General Permit Activity Sheets
(Attach appropriate sheets to the Permit Application submittal)

Project Activity Sheet #1
B - Clear Span Bridges

This activity includes minimum riprap necessary to ensure proper stabilization of side slopes in the immediate vicinity of the bridge that is properly sized and consists of natural rock or clean broken concrete. The bridge must be anchored to prevent floatation during periods of high water, and allow passage of watercraft that could be expected to navigate the water involved. See Appendix A for all County Drain GP category requirements.

Purpose and Alternatives

Select the purpose of the project (check all that apply):

- ❑ Property access. (e.g., for driveways, farm drives, utility right-of-ways, etc.)
- ❑ Road crossing (private or public)
- ❑ Part of overall maintenance project
- ❑ Other. Please explain:_____

Select alternatives considered to minimize or avoid resource impacts (check all that apply and provide a statement next to each of why that alternative is not feasible and prudent):

- ❑ No action: _____
- ❑ Alternative location: _____
- ❑ Alternative layout, design, and/or size: _____
- ❑ Alternative construction methods: _____
- ❑ Other: _____

Activity Information

Enter bridge width next to an assigned activity label (B1, etc.) on drawing below; add any other known information. For multiple bridges, list the multiple lengths below with a sequential label. On an accompanying map, show the activity to be performed at each location with the corresponding activity label used on the below drawing.

☐ **New** ☐ **Replacement** (**check ONE;** use separate sheet for additional type)

If replacement bridge, enter existing bridge width (assign label(s) and show on map): _____

Enter proposed total length of activity here

TOTAL LENGTH OF PROJECT

_____

Enter additional total lengths of activity:

_____

_____

_____

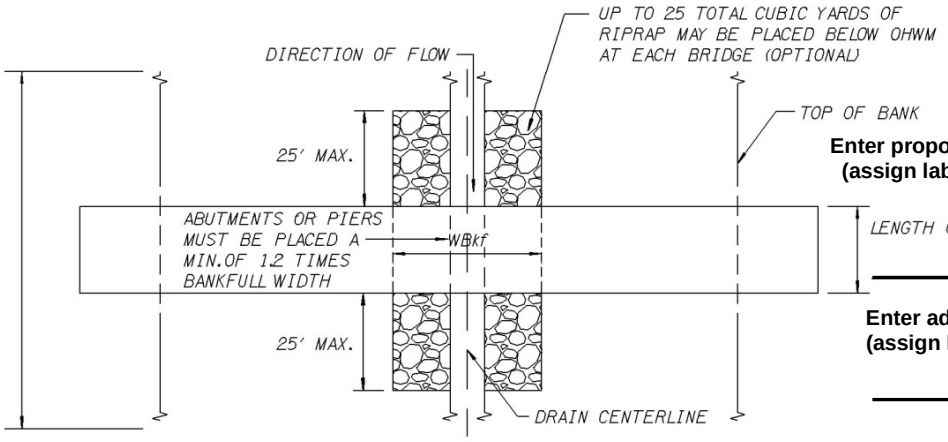

Enter proposed bridge length here (assign label and show on map)

_____

Enter additional bridge lengths: (assign labels and show on map)

_____

_____

_____

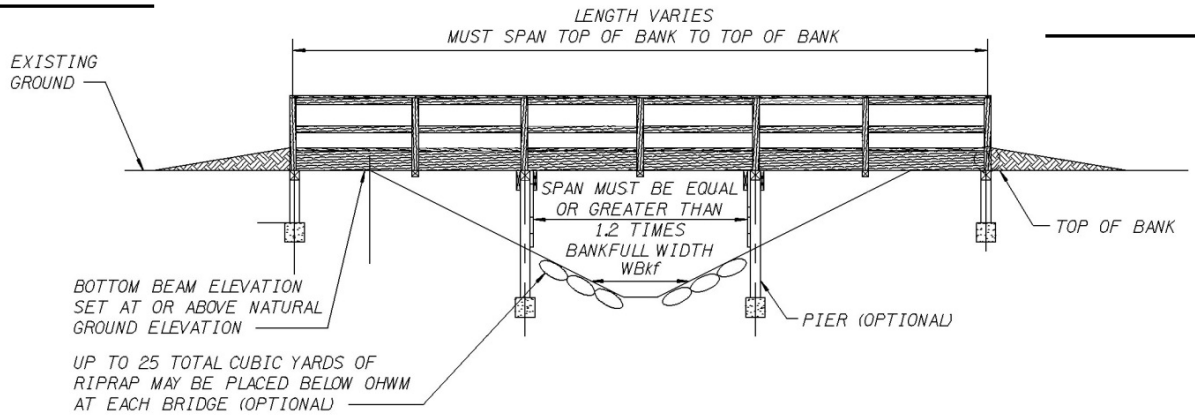

Any other pertinent information pertaining to this activity: _____

_____

_____

Project Activity Sheet #2
C - Culverts (Short or Long)

This activity includes the minimum riprap necessary to ensure proper stabilization of side slopes in the immediate vicinity of the culvert. The culvert must be buried, designed, and sized in accordance with the GP category (note: short and long culverts have different design requirements). The total length of new culverts (enclosures) per drain project must be less than 300 feet, including end sections. New culvert enclosures shall not exceed 150 feet per mile per project. For new culverts 70 feet in length or longer, the 25 feet of channel at both ends of the culvert shall be improved in accordance with the County Drain GP category. See Appendix A for all County Drain GP category requirements.

Purpose and Alternatives

Select the purpose of the project (check all that apply):

- ❑ Property access. (e.g., for driveways, farm drive, utility right-of-ways, etc.)
- ❑ Part of overall maintenance oroject
- ❑ Road crossing (private or public)
- ❑ Other. Please explain:_____

Select alternatives considered to minimize or avoid resource impacts (check all that apply and provide a statement next to each of why that alternative is not feasible and prudent):

- ❑ No action: _____
- ❑ Alternative location: _____
- ❑ Alternative layout, design, and/or size: _____
- ❑ Alternative construction methods: _____
- ❑ Other: _____

Activity Information

Enter culvert length next to an assigned activity label (C1, etc.) on drawing below; add any other known information. For multiple culverts, list the multiple lengths below with a sequential label. If length is currently unknown, the maximum length as allowed in the GP Category for that activity may be entered. On an accompanying map, show the activity to be performed at each location with the corresponding activity label used on the below drawing.

☐ **New** ☐ **Replacement (check ONE; use separate sheet for different type)**

If replacement culvert, enter existing culvert length (assign label(s) and show on map): _____
Labels for existing and proposed culverts should be the same for replacement projects.

Enter proposed culvert length here (assign label and show on map)

Enter additional culvert lengths:

_____
_____
_____

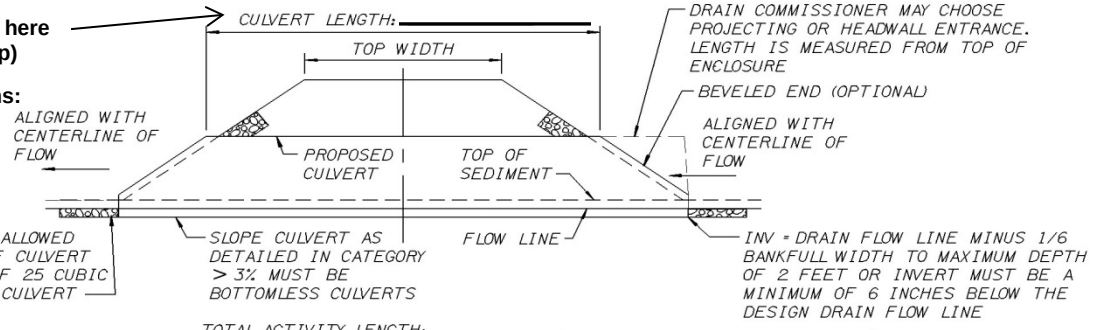

Enter additional total lengths of activity:

_____
_____
_____

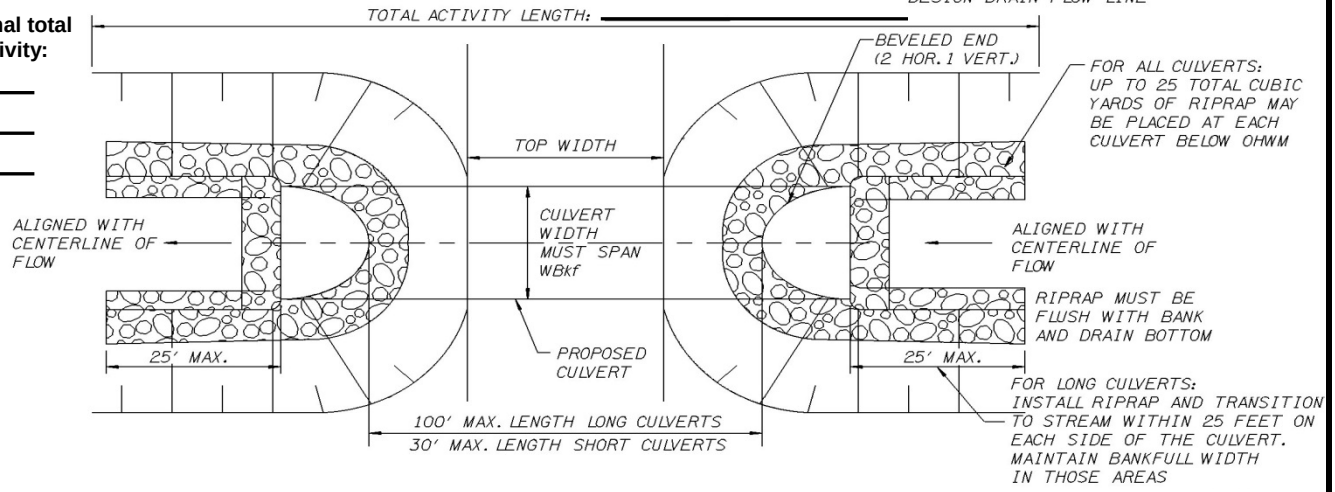

For Culverts >70 Feet in length, one of the following must be applied for 25 Feet on Each End (check one):

☐ Improve Entrenchment Ratio (≥1.4) ☐ Install Bankfull Bench at least ⅓ WB_{kf} ☐ Bioengineered Bank Stabilization that meets MP 2

Any other pertinent information pertaining to this activity: _____

_____

_____

Project Activity Sheet #3
CS - Culvert End Sections, Headwalls and Wingwalls

This category includes a maximum of 12 feet per end section. The existing culvert cannot be perched. This category includes minimum riprap necessary to ensure proper stabilization of side slopes in the immediate vicinity of the culvert. Riprap shall not exceed 25 linear feet on each side of the culvert and shall be a maximum of 25 cubic yards. See Appendix A for all County Drain GP category requirements.

Purpose and Alternatives

Select the purpose of the project (check all that apply):

- ❑ Structure failure
- ❑ Headwall elimination
- ❑ Protection of failing slopes or other erosion control
- ❑ Other. Please explain:_____

Select alternatives considered to minimize or avoid resource impacts (check all that apply and provide a statement next to each of why that alternative is not feasible and prudent):

- ❑ No action: _____
- ❑ Alternative location: _____
- ❑ Alternative layout, design, and/or size: _____
- ❑ Alternative construction methods: _____
- ❑ Other: _____

Activity Information

Enter end section length next to an assigned activity label (CS1, etc.) on drawing below; add any other known information. For multiple end sections, list the multiple lengths below with a sequential label. If length is currently unknown, the maximum length as allowed in the GP Category for that activity may be entered. On an accompanying map, show the activity to be performed at each location with the corresponding activity label used on the below drawing.

☐ **New** ☐ **Replacement (check ONE; use separate sheet for different type)**

If replacement end section, enter existing length (assign label(s) and show on map): _____
Labels for existing and proposed culverts are to be the same for replacement projects.

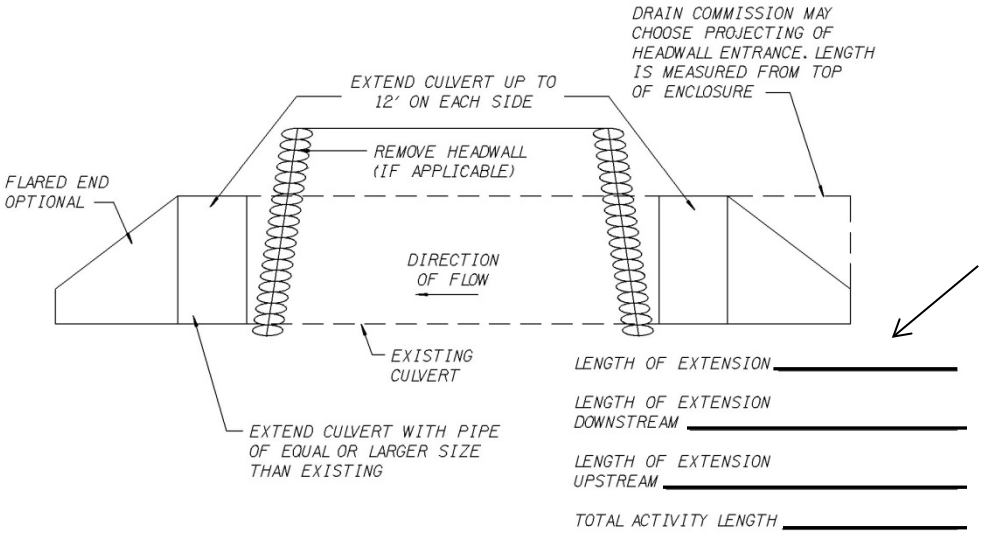

Enter proposed end section information here (assign label(s) and show on map)

LENGTH OF EXTENSION _____

LENGTH OF EXTENSION DOWNSTREAM _____

LENGTH OF EXTENSION UPSTREAM _____

TOTAL ACTIVITY LENGTH _____

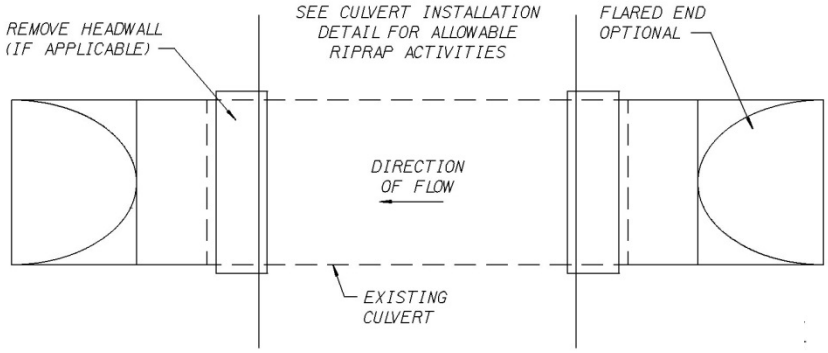

Enter mutiple end section information below as necessary

Length _____

Upstream _____

Downstream _____

Total activity length _____

Length _____

Upstream _____

Downstream _____

Total activity length _____

Any other pertinent information pertaining to this activity: _____

Project Activity Sheet #4
R - Riprap

This category includes placement of less than 500 feet of riprap below the Ordinary High Water Mark for toe protection, spillways, and other preventative measures and is not for full lining of the channel. Riprap shall be properly sized based on velocity and consist of natural field stone or rock (clean broken concrete may be used in legally established drains that are not mainstream portions of certain watercourses identified in rule). Excavation shall be limited to the amount necessary for erosion protection. See Appendix A for all County Drain GP category requirements.

Purpose and Alternatives

Select the purpose of the project (check all that apply):

- ❑ Toe protection
- ❑ Spillway/splash pad
- ❑ Bank stabilization
- ❑ Other. Please explain:_____

Select alternatives considered to minimize or avoid resource impacts (check all that apply and provide a statement next to each of why that alternative is not feasible and prudent):

- ❑ No action: _____
- ❑ Alternative location: _____
- ❑ Alternative layout, design, and/or size: _____
- ❑ Alternative construction methods: _____
- ❑ Other: _____

Activity Information

Enter riprap placement length next to an assigned activity label (R1, etc.) on drawing below; add any other known information. For multiple areas of riprap application, list the multiple lengths below with a sequential label. If length is currently unknown, the maximum length as allowed in the GP Category for that activity may be entered. On an accompanying map, show the activity to be performed at each location with the corresponding activity label used on the below drawing.

Enter proposed riprap information here (assign label and show on map)

TOTAL LENGTH OF STREAM TO BE RIPRAPPED _____

LENGTH ON LEFT SIDE (LOOKING UPSTREAM) _____

LENGTH ON RIGHT SIDE (LOOKING UPSTREAM) _____

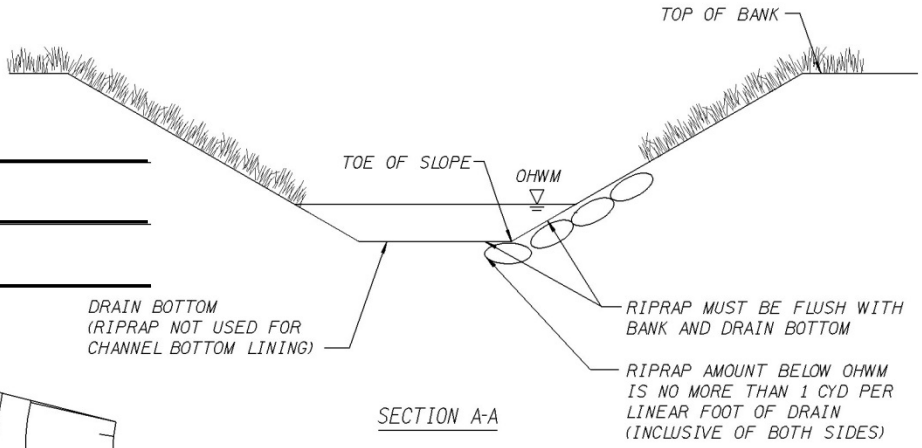

Enter multiple riprap locations information below as necessary:

Total _____

Left _____

Right _____

Total _____

Left _____

Right _____

Total _____

Left _____

Right _____

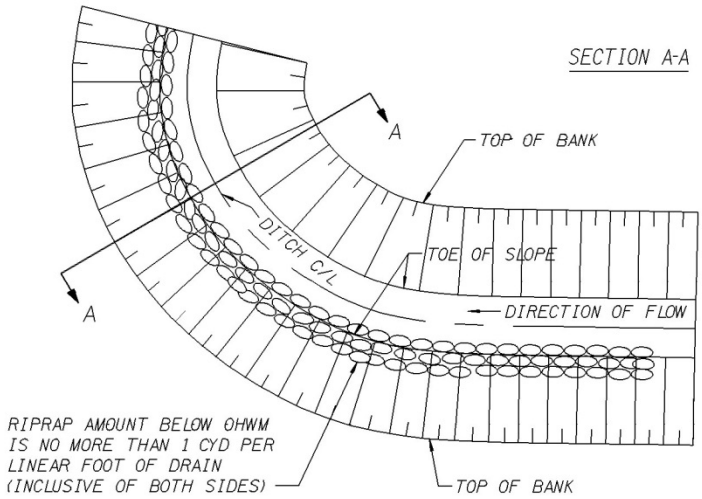

Any other pertinent information pertaining to this activity: _____

Project Activity Sheet #5
DR - Drain Realignments

This activity includes realignment of up to 300 feet of drain that runs parallel to the road within the existing drain or road right-of-way. The realigned drain shall retain the same slope and bed features of the existing drain, consistent length, and shall not exceed the existing depth and bottom width. The entrenchment ratio of the realigned drain must be improved over the existing drain condition and be at least 1.4. See Appendix A for all County Drain GP category requirements.

Purpose and Alternatives

The purpose of this drain realignment is to increase aquatic resource functions and services, in conjunction with (check all that apply):

- ❑ Road relocation project
- ❑ Road safety project
- ❑ Other. Please explain:

Select alternatives considered to minimize or avoid resource impacts (check all that apply and provide a statement next to each of why that alternative is not feasible and prudent):

- ❑ No action: _____
- ❑ Alternative location: _____
- ❑ Alternative layout, design, and/or size: _____
- ❑ Alternative construction methods: _____
- ❑ Other: _____

Activity Information

Enter drain realignment length next to an assigned activity label on drawing below; add any other known information. On an accompanying map, show the activity to be performed at each location with the corresponding activity label used on the below drawing.

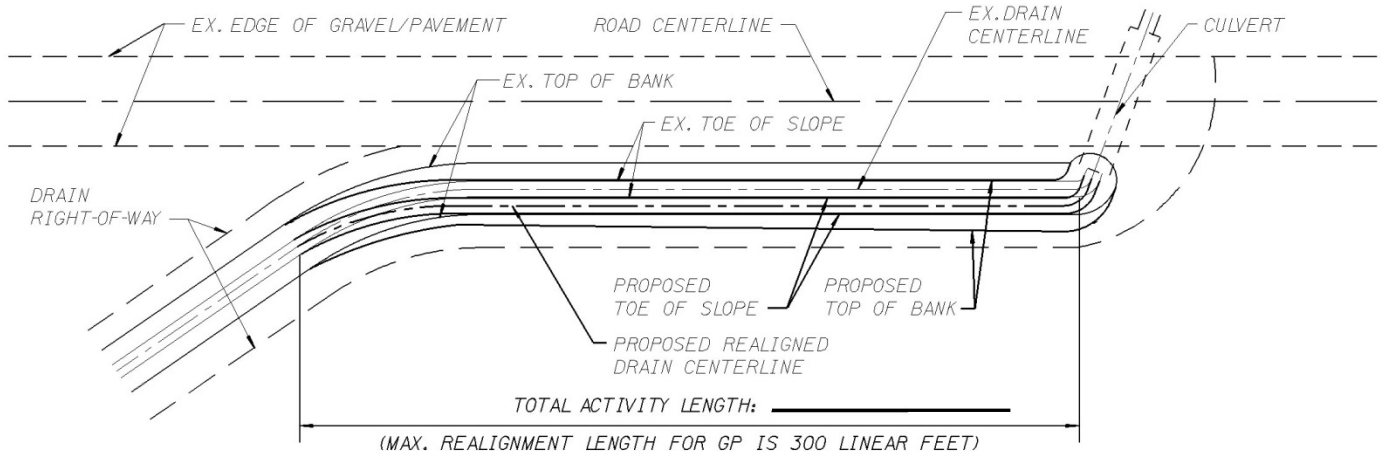

THE ENTRENCHMENT RATIO OF THE DRAIN SHALL BE IMPROVED OVER THE EXISTING CONDITION AND BE AT LEAST 1.4

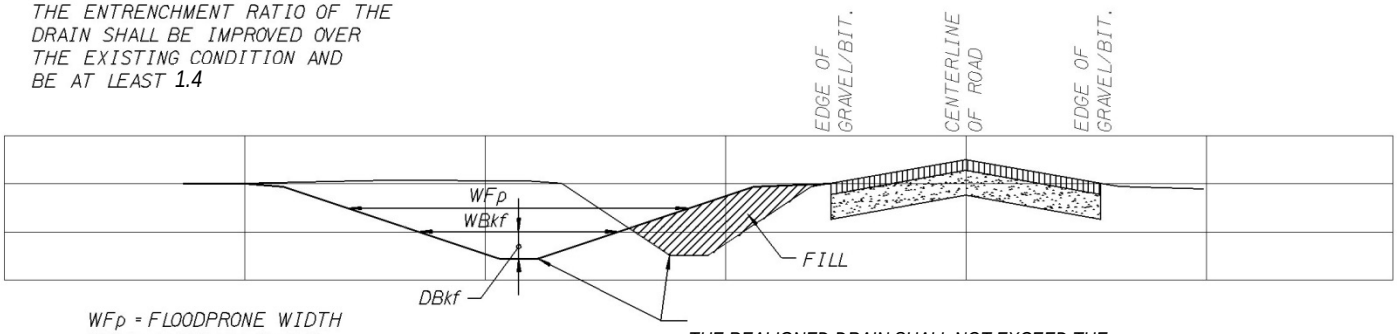

WFp = FLOODPRONE WIDTH
WBkf = BANKFULL WIDTH
DBkf = BANKFULL DEPTH
WfP = 2x DBkf
ER = ENTRENCHMENT RATIO
ER = WFp/WBkf

THE REALIGNED DRAIN SHALL NOT EXCEED THE DEPTH AND BOTTOM WIDTH OF THE EXISTING DRAIN. THE REALIGNED DRAIN SHALL RETAIN THE SAME SLOPE AND BED FEATURES AND CONSISTENT LENGTH AS THE EXISTING DRAIN.

Any other pertinent information pertaining to this activity: _____

Project Activity Sheet #6
VRX - Installation of Vanes: Cross Vanes

Installation of vanes shall be consistent with dimension, pattern, profile, and bed features of the stream channel and the channel slope/design grade shall not exceed 1%. This category does not include activities that raise the grade of the stream bed above 0.1 times the bankfull depth. Multiple vanes in a series shall be spaced so that the downstream structure is not influenced by the effects of the adjacent upstream structure. Minimum rock size shall be determined by calculating the bankfull shear stress and multiplying by 1.5, but shall be at least 1 foot in diameter. See Appendix A for all County Drain GP category requirements.

Purpose and Alternatives

The purpose of installation of vanes for this project is to restore, enhance, and establish riparian and stream habitat that will increase aquatic resource functions and services, including (check all that apply):

- ❑ Channel stability
- ❑ Bank stabilization
- ❑ Grade Control
- ❑ Flow alignment
- ❑ Other. Please explain: _____

Select alternatives considered to minimize or avoid resource impacts (check all that apply and provide a statement next to each of why that alternative is not feasible and prudent):

- ❑ No action: _____
- ❑ Alternative location: _____
- ❑ Alternative layout, design, and/or size: _____
- ❑ Alternative construction methods: _____
- ❑ Other: _____

Activity Information

Enter vane length next to an assigned activity label (VRX1, etc.) on drawing below; add any other known information. For multiple cross vanes, list the additional lengths below next to a sequential label. On an accompanying map, show the activity to be performed at each location with the corresponding activity label used on the below drawing.

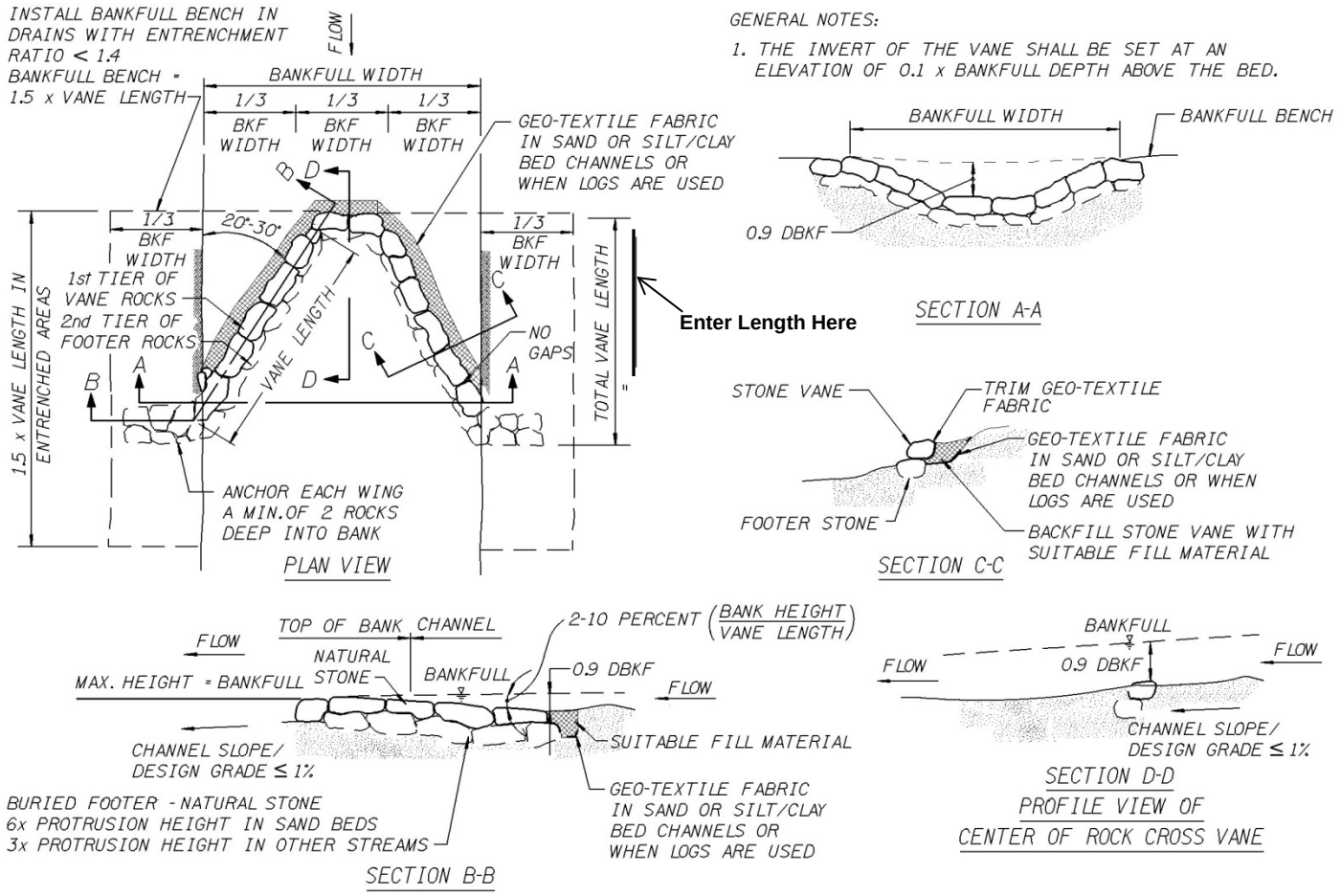

Enter additional vane lengths here (assign multiple labels): _____

Any other pertinent information pertaining to this activity: _____

_____

Project Activity Sheet #7
VRJ - Installation of Vanes: J-Hooks

Installation of i-hooks shall be consistent with dimension, pattern, profile, and bed features of the stream channel and the channel slope/design grade shall not exceed 1%. This category does not include activities that raise the grade of the stream bed above 0.1 times the bankfull depth. Multiple j-hooks in a series shall be spaced so that the downstream structure is not influenced by the effects of the adjacent upstream structure. Minimum rock size shall be determined by calculating the bankfull shear stress and multiplying by 1.5, but shall be at least 1 foot in diameter. See Appendix A for all County Drain GP category requirements.

Purpose and Alternatives

The purpose of installation of vanes for this project is to restore, enhance, and establish riparian and stream habitat that will increase aquatic resource functions and services, including (check all that apply):

- ❑ Channel stability
- ❑ Bank stabilization
- ❑ Grade control
- ❑ Flow alignment
- ❑ Other. Please explain:_____

Select alternatives considered to minimize or avoid resource impacts (check all that apply and provide a statement next to each of why that alternative is not feasible and prudent):

- ❑ No action: _____
- ❑ Alternative location: _____
- ❑ Alternative layout, design, and/or size: _____
- ❑ Alternative construction methods: _____
- ❑ Other: _____

Activity Information

Enter j-hook length next to an assigned activity label (VRJ1, etc.) on drawing below; add any other known information. For multiple j-hooks, list the multiple lengths below next to a sequential label. On an accompanying map, show the activity to be performed at each location with the corresponding activity label used on the below drawing.

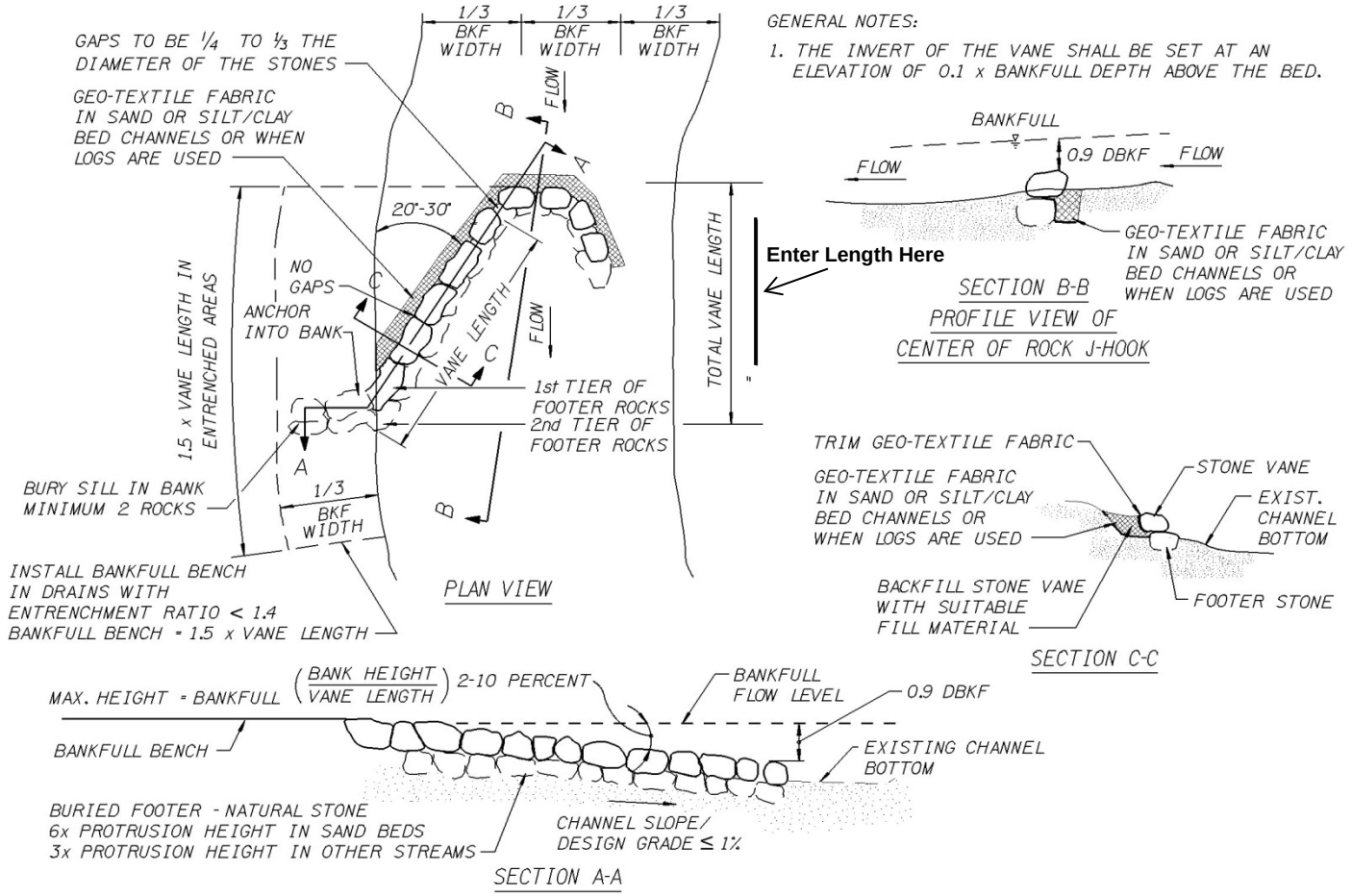

Enter additional j-hook lengths here (assign multiple labels): _____

Any other pertinent information pertaining to this activity: _____

Project Activity Sheet #8
VR - Installation of Riffles

Installation of riffles shall be consistent with dimension, pattern, profile, and bed features of the stream channel and the channel slope/design grade shall not exceed 1%. This category does not include activities that raise the grade of the stream bed above 0.1 times the bankfull depth. Multiple riffles in a series shall be spaced at a distance that is consistent with the spacing of the existing riffle-pool sequence; in cases where there is no existing riffle-pool sequence, the riffles shall be spaced at a minimum of 5 times the bankfull width. See Appendix A for all County Drain GP category requirements.

Purpose and Alternatives

The purpose of installation of vanes for this project is to restore, enhance, and establish riparian and stream habitat that will increase aquatic resource functions and services, including (check all that apply):

- ❑ Channel stability
- ❑ Bank stabilization
- ❑ Grade control
- ❑ Flow alignment
- ❑ Other. Please explain:_____

Select alternatives considered to minimize or avoid resource impacts (check all that apply and provide a statement next to each of why that alternative is not feasible and prudent):

- ❑ No action: _____
- ❑ Alternative location: _____
- ❑ Alternative layout, design, and/or size: _____
- ❑ Alternative construction methods: _____
- ❑ Other: _____

Activity Information

Enter riffle length next to an assigned activity label (VR1, etc.) on drawing below; add any other known information. For multiple riffles, list the multiple lengths below next to a sequential label. On an accompanying map, show the activity to be performed at each location with the corresponding activity label used on the below drawing.

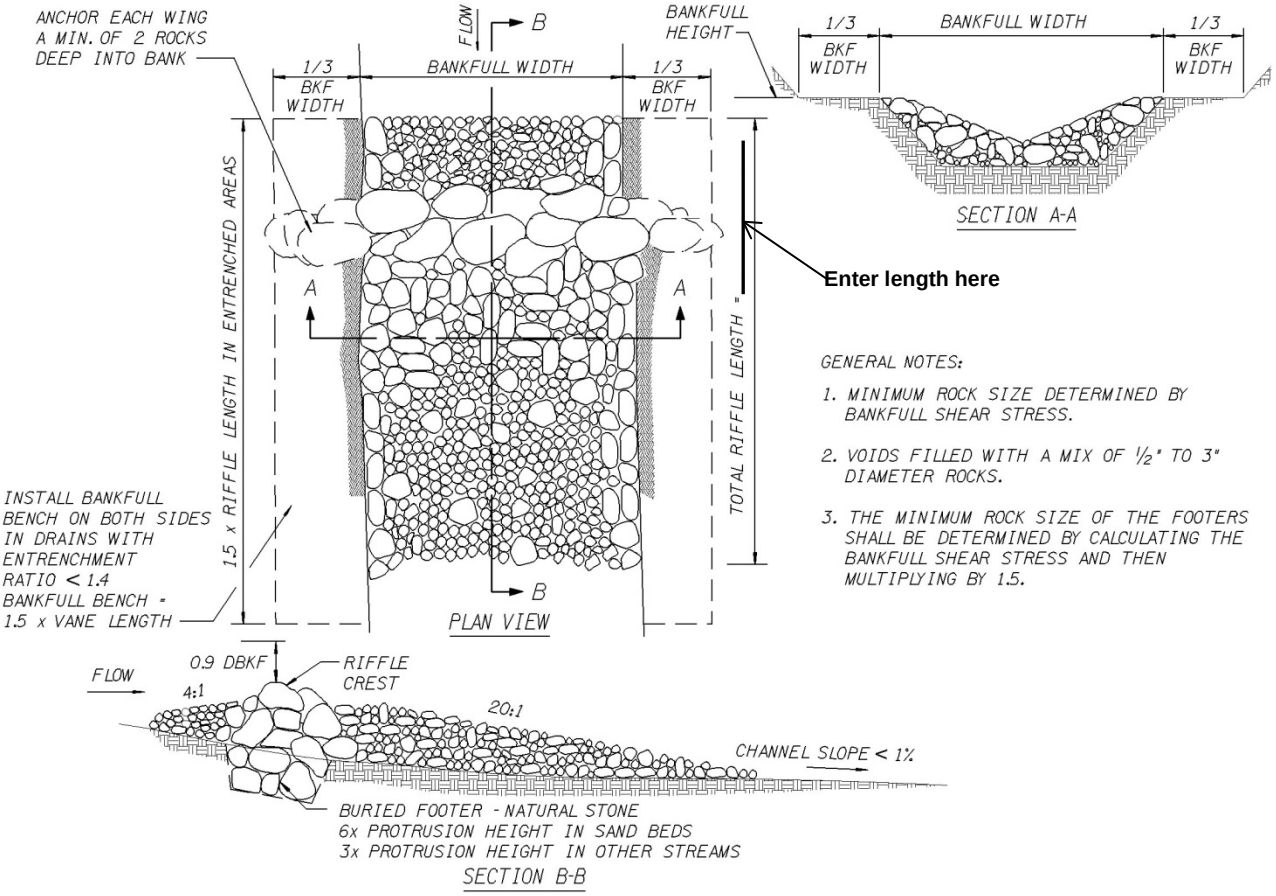

Enter additional riffle lengths here (assign multiple labels): _____

Any other pertinent information pertaining to this activity: _____